Building your own pontoon (BSE)

Arrival date: Oct 17, 2013

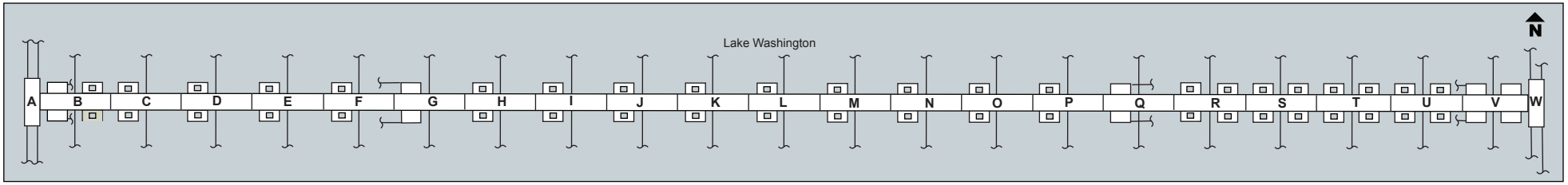

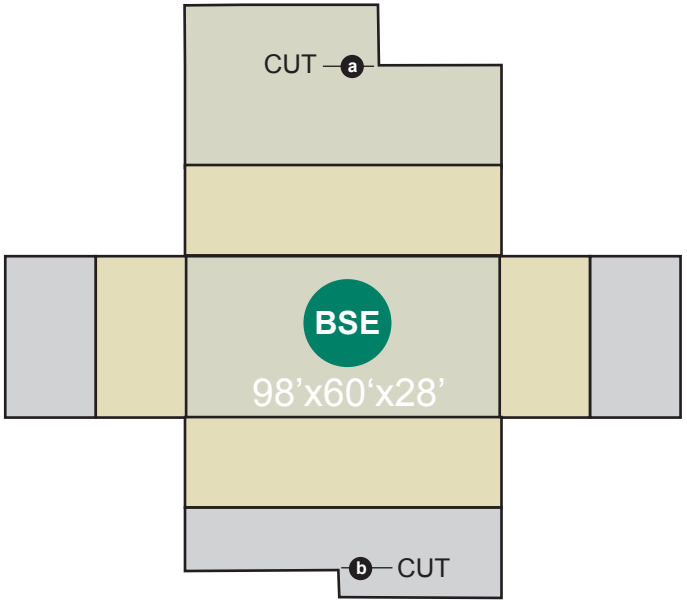

Instruction:
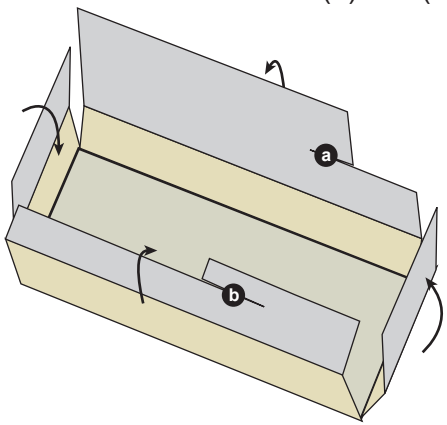
1. Cut around the edge
2. Cut (a) and (b)
3. Fold all flaps in
4. insert (a) into (b)