GENERAL NOTES:

1. PRIOR TO CONSTRUCTION, THE CONTRACTOR SHALL SUBMIT TO THE ENGINEER FOR HIS WRITTEN APPROVAL ALL DETAILS OF CABLES AND CONNECTIONS OF TV CAMERA POLES.
2. CABLES INSIDE THE POLE SHALL BE SUSPENDED SUCH THAT NONE OF THE CABLE WEIGHT IS TRANSFERRED TO THE CABLE CONNECTIONS OR TERMINATIONS.
3. ALL HARDWARE SHALL BE STAINLESS STEEL OR GALVANIZED.

CAMERA POLE SCHEDULE

CCTV#	LINE	STATION	OFFSET	LT/RT	POLE HEIGHT	FOUNDATION DEPTH	SHEET NO.

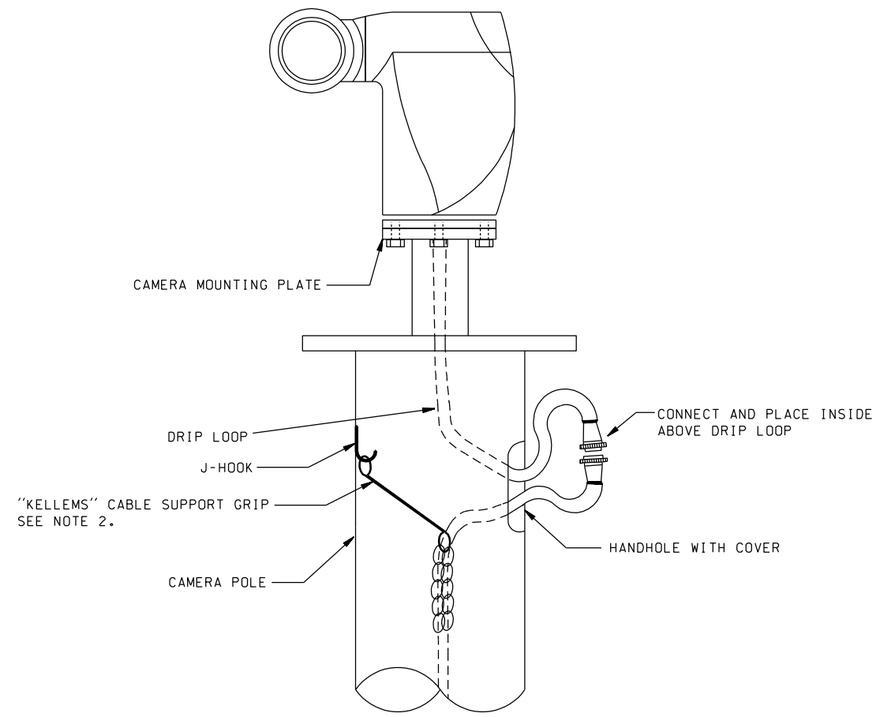

TYPICAL CAMERA MOUNTING DETAIL

MASTER DETAIL REVISED 03/28/06

FILE NAME	S:\414126\SCDI\Tranp\EXPANDED LEVEL DETAILS\camera.dgn									Plot 1
TIME	10:50:42 AM				REGION NO.	STATE	FED.AID PROJ.NO.		Washington State Department of Transportation	PLAN REF NO
DATE	7/1/2009				10	WASH				
PLOTTED BY	tranp				JOB NUMBER					SHEET
DESIGNED BY										
ENTERED BY										OF
CHECKED BY					CONTRACT NO.		LOCATION NO.			
PROJ. ENGR.										SHEETS
REGIONAL ADM.		REVISION	DATE	BY				P.E. STAMP BOX DATE	P.E. STAMP BOX DATE	

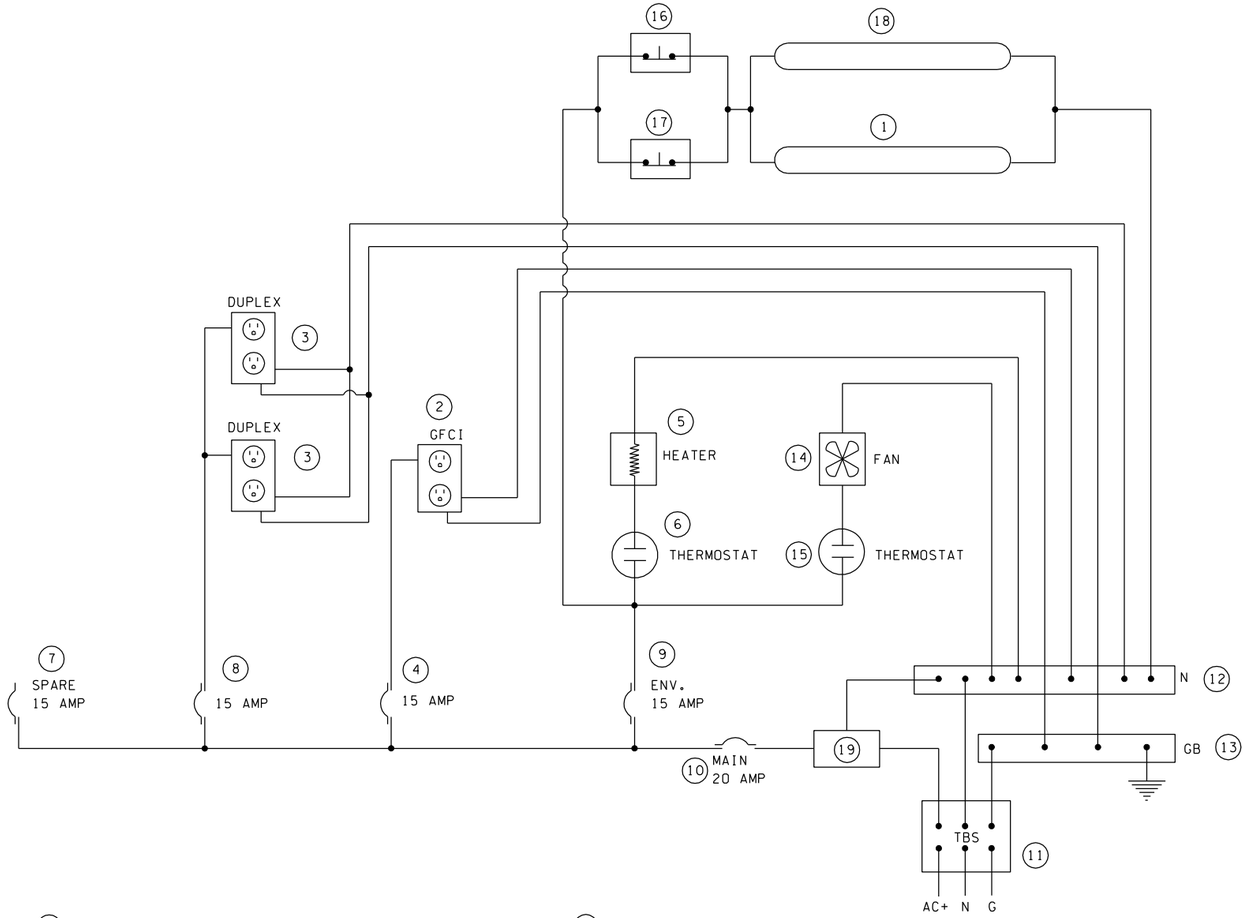

1. REAR CABINET LAMP
2. GFCI OUTLET DUPLEX RECEPTACLE
3. EIA DUPLEX RECEPTACLE
4. 15 AMP BREAKER FOR GFCI OUTLET
5. 100 WATT STRIP HEATER
6. THERMOSTAT, 50°F CLOSURE
7. 15 AMP SPARE BREAKER
8. 15 AMP RECEPTACLE BREAKER
9. 15 AMP ENVIRONMENTAL BREAKER
10. 20 AMP MAIN BREAKER
11. POWER TERMINAL BLOCK
12. NEUTRAL BUS, COPPER
13. GROUND BUS, COPPER
14. COOLING FAN
15. THERMOSTAT, 70°F CLOSURE
16. FRONT DOOR SWITCH (10 A), N.C.
17. REAR DOOR SWITCH (10 A), N.C.
18. FRONT CABINET LAMP
19. SURGE SUPPRESSOR AND FILTER.

CAMERA CABINET WIRING DIAGRAM

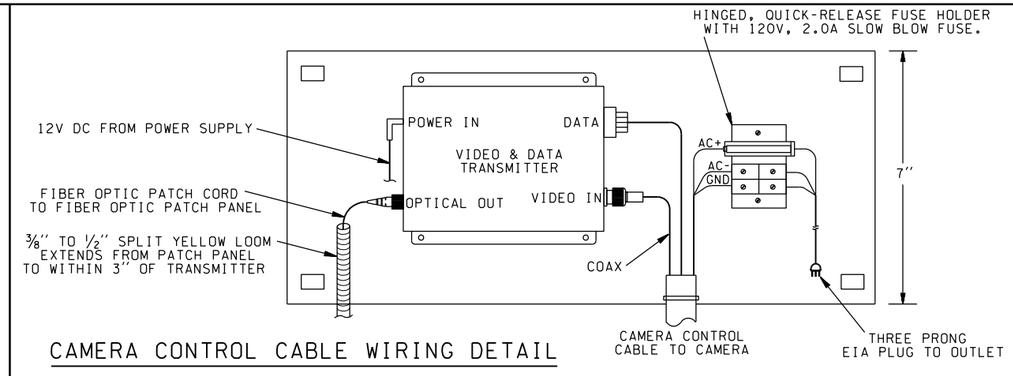

CAMERA CONTROL CABLE WIRING DETAIL

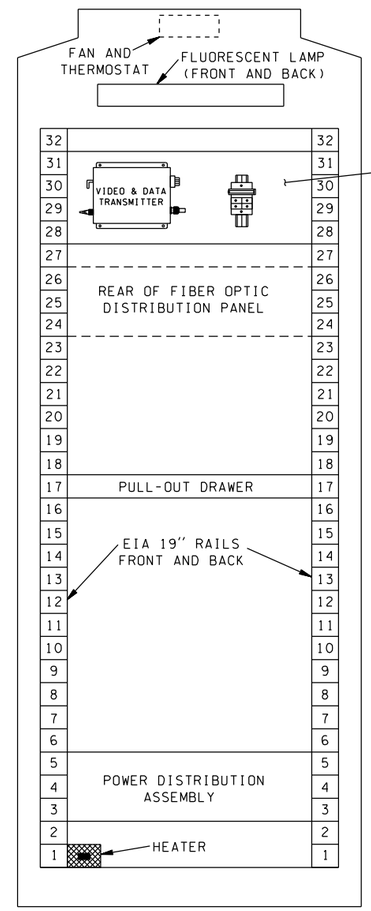

CAMERA CABINET RACK ELEVATION - FRONT VIEW

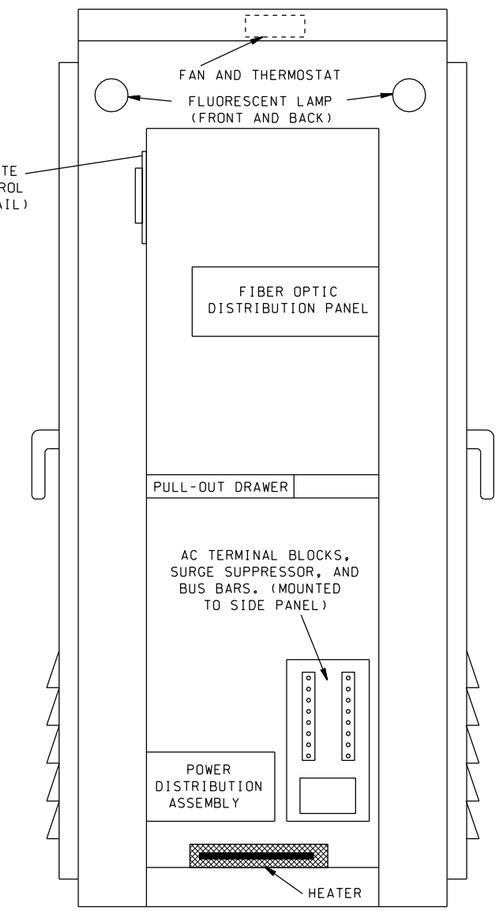

CAMERA CABINET RACK - SIDE VIEW

CAMERA CABINET DETAILS

NOT TO SCALE

MASTER DETAIL REVISED 01/12/07

FILE NAME	S:\414126\SCDI\Tranp\EXPANDED LEVEL DETAILS\camera.dgn				REGION NO.	STATE	FED.AID PROJ.NO.
TIME	10:50:43 AM				10	WASH	
DATE	7/1/2009						
PLOTTED BY	tranp				JOB NUMBER		
DESIGNED BY							
ENTERED BY							
CHECKED BY					CONTRACT NO.		LOCATION NO.
PROJ. ENGR.							
REGIONAL ADM.		REVISION	DATE	BY			

P.E. STAMP BOX DATE

P.E. STAMP BOX DATE

Washington State
Department of Transportation

Plot 2
PLAN REF NO

SHEET
OF
SHEETS

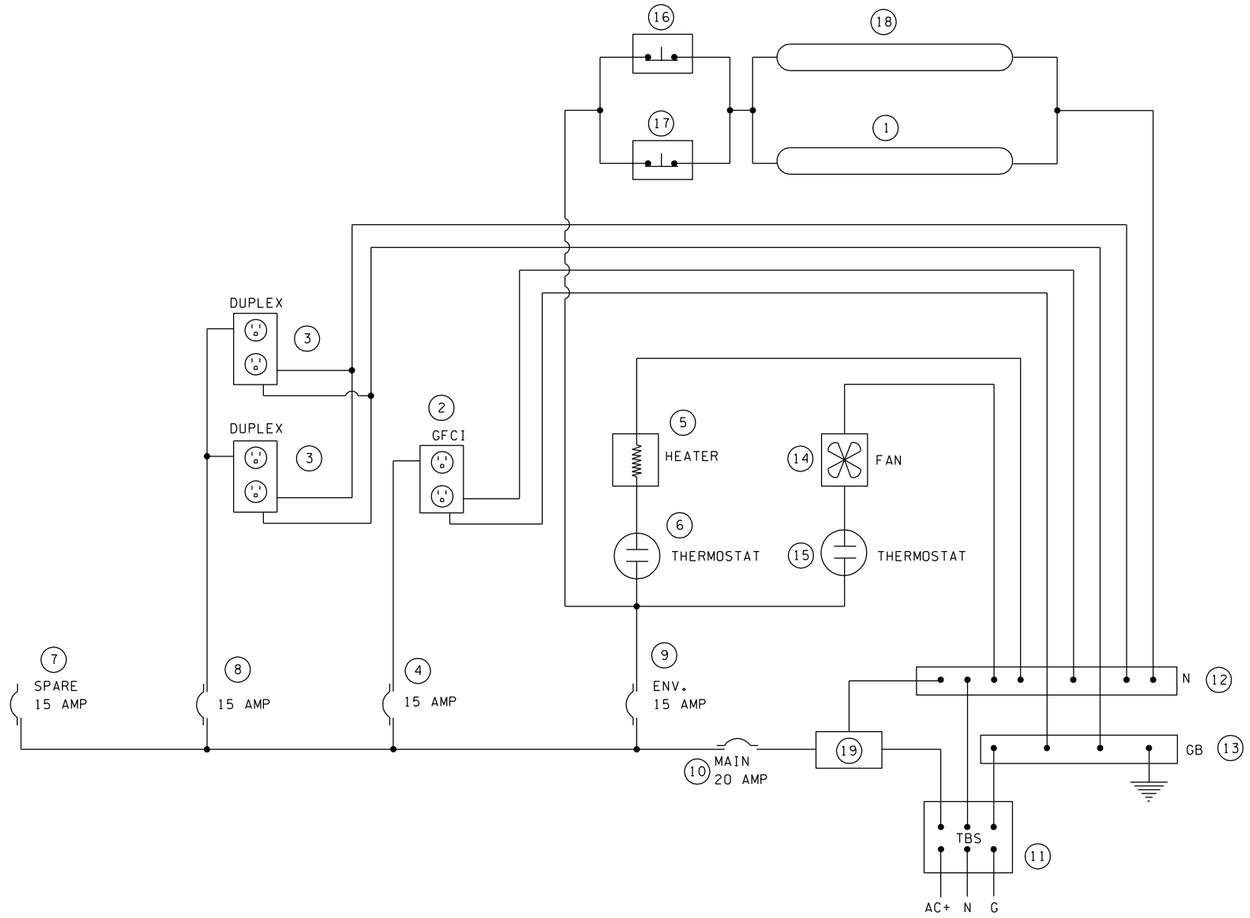

1. REAR CABINET LAMP (NOT REQUIRED FOR POLE-MOUNTED CABINET)
2. GFCI OUTLET DUPLEX RECEPTACLE
3. EIA DUPLEX RECEPTACLE
4. 15 AMP BREAKER FOR GFCI OUTLET
5. 100 WATT STRIP HEATER
6. THERMOSTAT, 50°F CLOSURE
7. 15 AMP SPARE BREAKER
8. 15 AMP RECEPTACLE BREAKER
9. 15 AMP ENVIRONMENTAL BREAKER
10. 20 AMP MAIN BREAKER
11. POWER TERMINAL BLOCK
12. NEUTRAL BUS, COPPER
13. GROUND BUS, COPPER
14. COOLING FAN
15. THERMOSTAT, 70°F CLOSURE
16. FRONT DOOR SWITCH (10 A), N.C.
17. REAR DOOR SWITCH (10 A), N.C. (NOT REQUIRED FOR POLE-MOUNTED CABINET)
18. FRONT CABINET LAMP
19. SURGE SUPPRESSOR AND FILTER.

CAMERA CONTROL CABINET WIRING DIAGRAM

MASTER DETAIL REVISED 03/28/06

FILE NAME	S:\414126\SCDI\Tranp\EXPANDED LEVEL DETAILS\camera.dgn					
TIME	10:50:43 AM			REGION NO. 10	STATE WASH	FED.AID PROJ.NO.
DATE	7/1/2009			JOB NUMBER		
PLOTTED BY	tranp					
DESIGNED BY						
ENTERED BY				CONTRACT NO.		LOCATION NO.
CHECKED BY						
PROJ. ENGR.						
REGIONAL ADM.		REVISION	DATE	BY		

P.E. STAMP BOX DATE

P.E. STAMP BOX DATE

Washington State Department of Transportation

Plot 3

PLAN REF NO

SHEET OF SHEETS

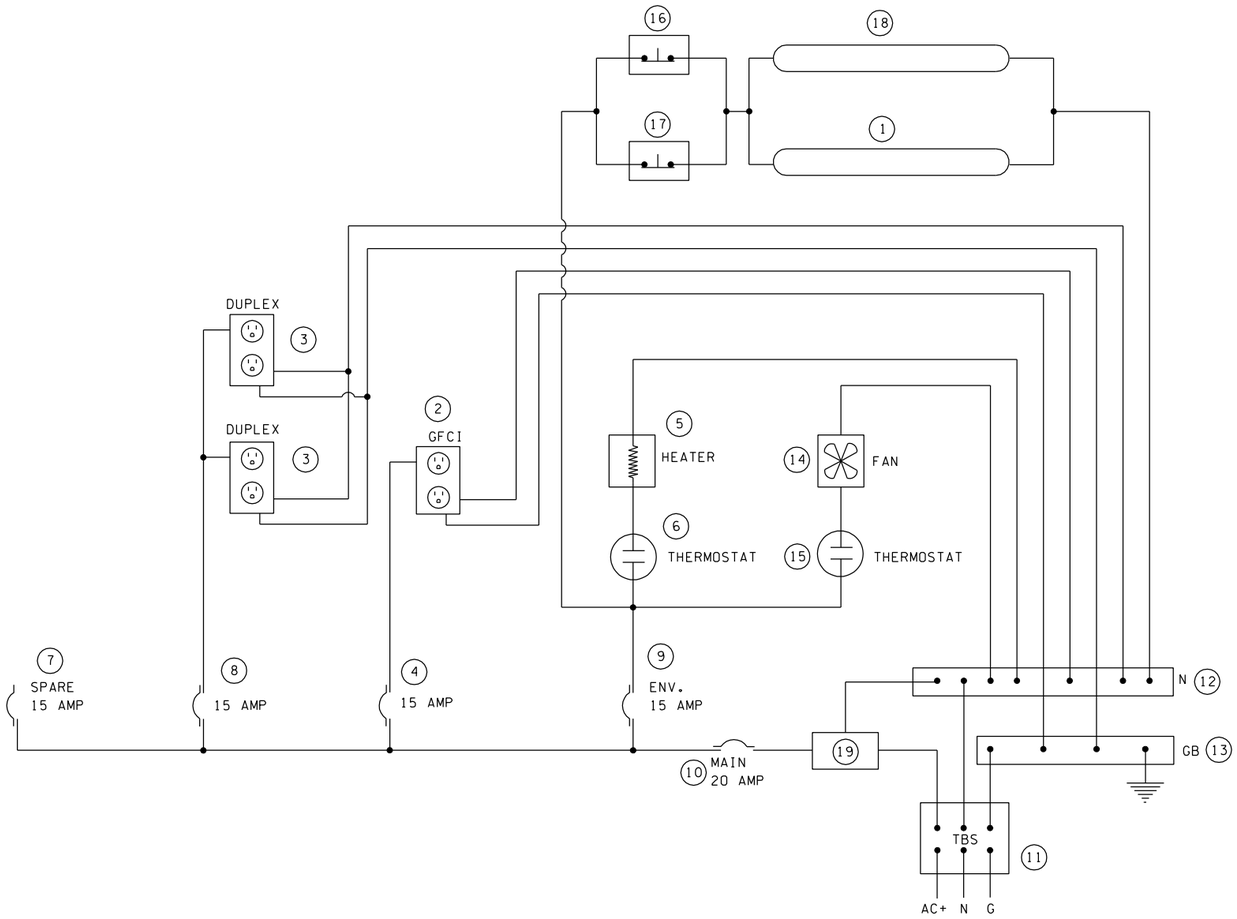

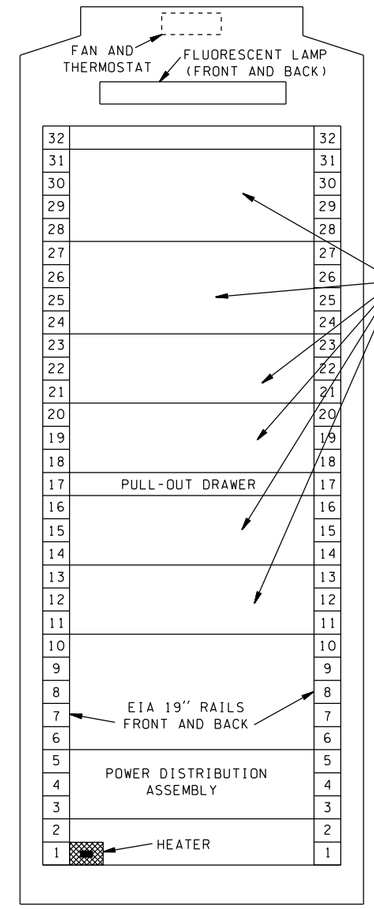

FIBER OPTIC TERMINAL CABINET RACK ELEVATION - FRONT VIEW

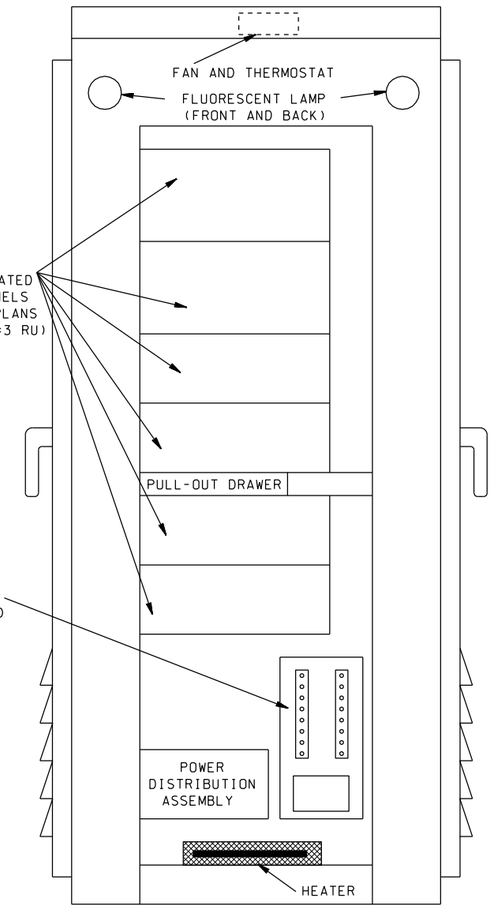

FIBER OPTIC TERMINAL CABINET - SIDE VIEW

1. REAR CABINET LAMP
2. GFCI OUTLET DUPLEX RECEPTACLE
3. EIA DUPLEX RECEPTACLE
4. 15 AMP BREAKER FOR GFCI OUTLET
5. 100 WATT STRIP HEATER
6. THERMOSTAT, 50°F CLOSURE
7. 15 AMP SPARE BREAKER
8. 15 AMP RECEPTACLE BREAKER
9. 15 AMP ENVIRONMENTAL BREAKER
10. 20 AMP MAIN BREAKER
11. POWER TERMINAL BLOCK
12. NEUTRAL BUS, COPPER
13. GROUND BUS, COPPER
14. COOLING FAN
15. THERMOSTAT, 70°F CLOSURE
16. FRONT DOOR SWITCH (10 A), N.C.
17. REAR DOOR SWITCH (10 A), N.C.
18. FRONT CABINET LAMP
19. SURGE SUPPRESSOR AND FILTER.

FIBER OPTIC TERMINAL CABINET WIRING DIAGRAM

FIBER OPTIC TERMINAL CABINET DETAILS

MASTER DETAIL REVISED 01/12/07

FILE NAME	S:\414126\SCDI\Tranp\EXPANDED LEVEL DETAILS\camera.dgn						
TIME	10:50:43 AM				REGION NO. 10	STATE WASH	FED.AID PROJ.NO.
DATE	7/1/2009						
PLOTTED BY	tranp				JOB NUMBER		
DESIGNED BY							
ENTERED BY							
CHECKED BY					CONTRACT NO.		LOCATION NO.
PROJ. ENGR.							
REGIONAL ADM.		REVISION	DATE	BY			

P.E. STAMP BOX DATE

P.E. STAMP BOX DATE

Washington State Department of Transportation

Plot 4

PLAN REF NO

SHEET OF SHEETS

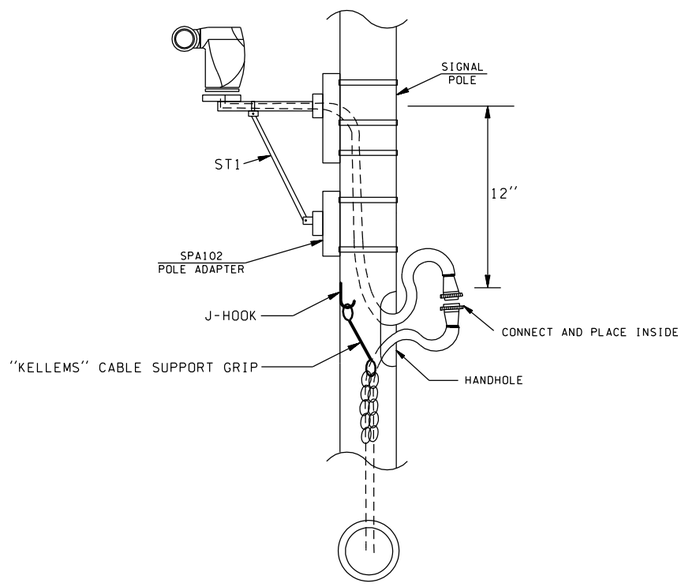

CAMERA ATTACHMENT ON SIGNAL POLE
3955 STANDARD PAN/TILT

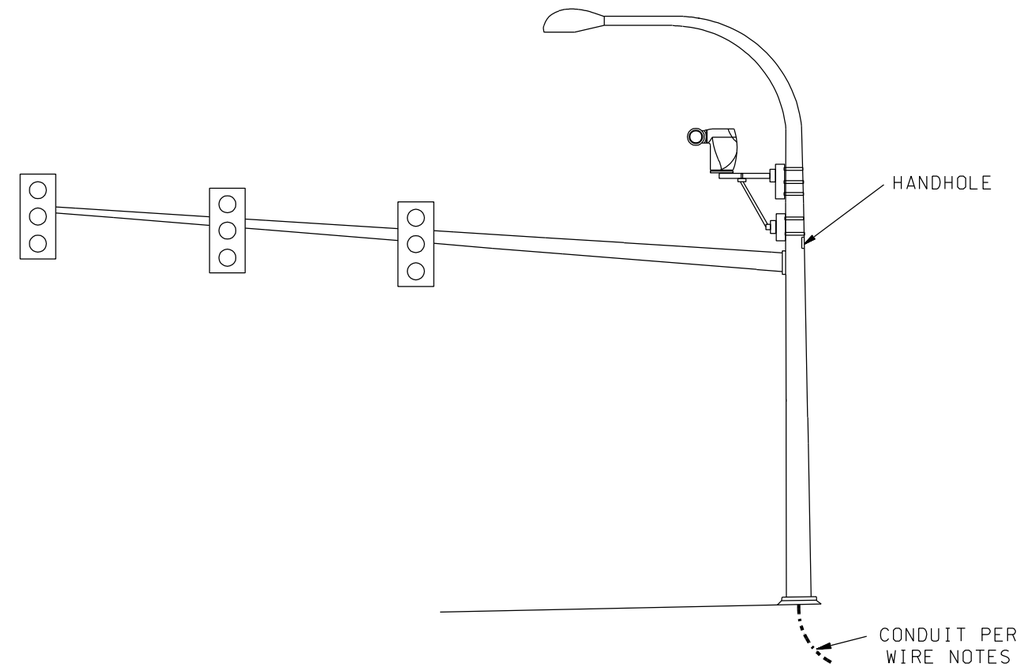

TYPICAL INSTALLATION FOR ARTERIAL CCTV ON SIGNAL POLE

MASTER DETAIL REVISED 03/28/08

FILE NAME	S:\414126\SCDI\Tranp\EXPANDED LEVEL DETAILS\camera.dgn					
TIME	10:50:44 AM			REGION NO. 10	STATE WASH	FED.AID PROJ.NO.
DATE	7/1/2009					
PLOTTED BY	tranp			JOB NUMBER		
DESIGNED BY						
ENTERED BY						
CHECKED BY				CONTRACT NO.		LOCATION NO.
PROJ. ENGR.						
REGIONAL ADM.		REVISION	DATE	BY		

P.E. STAMP BOX DATE

P.E. STAMP BOX DATE

Washington State Department of Transportation

Plot 5

PLAN REF NO

SHEET OF SHEETS

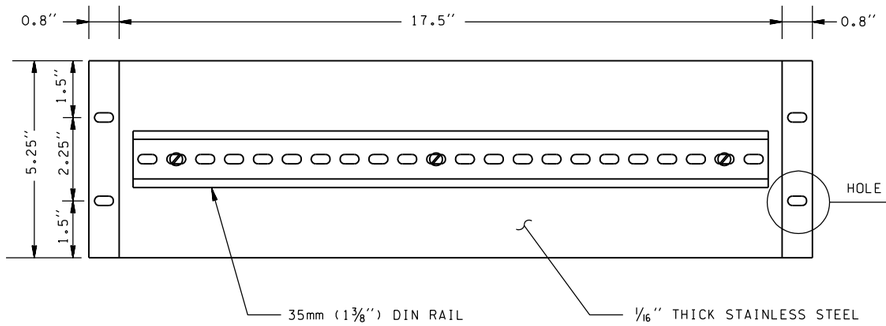

FRONT VIEW

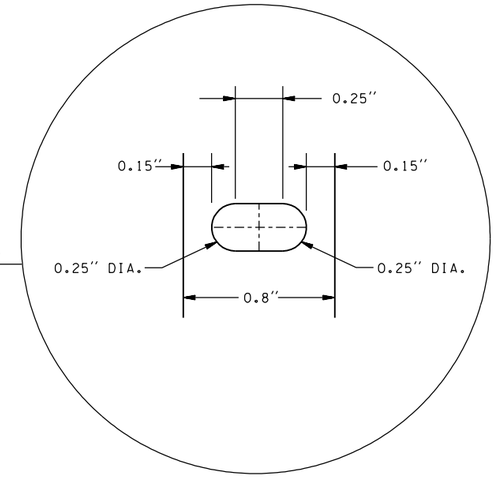

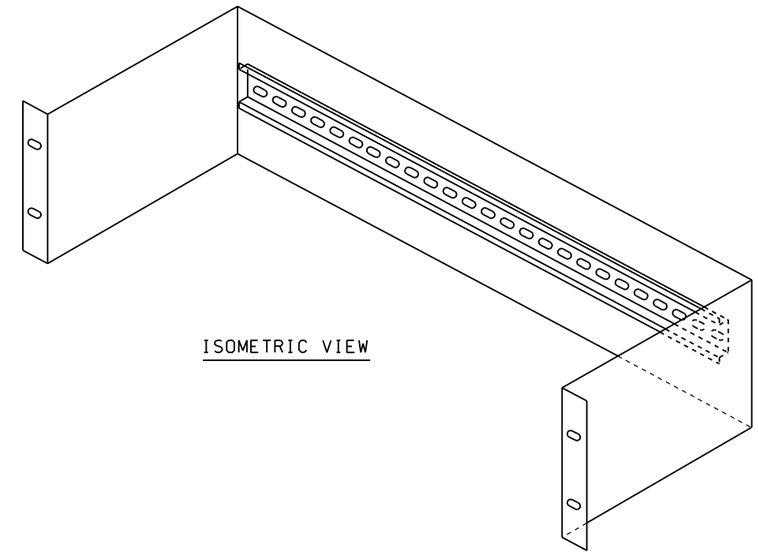

ISOMETRIC VIEW

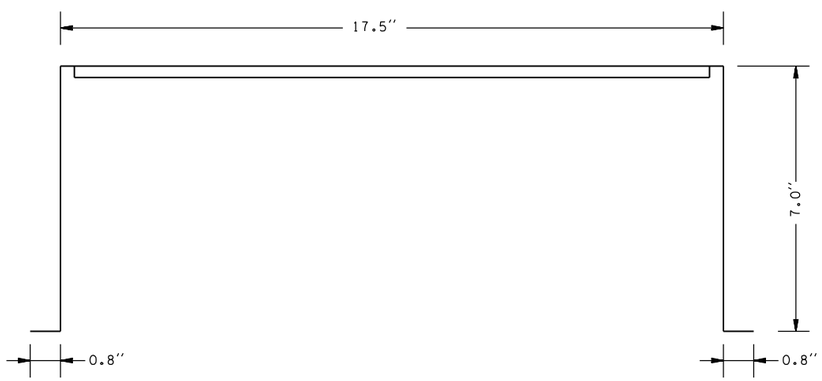

TOP VIEW

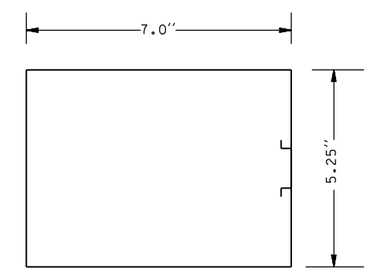

SIDE VIEW

GENERAL NOTES:

1. FOR USE IN ALL ITS CABINETS (NOT SIGNAL CABINETS) WITH ELECTRONICS DESIGNED TO BE DIN-RAIL MOUNTED.

FIBER OPTIC SWITCH BRACKET DETAIL

NOT TO SCALE

MASTER DETAIL REVISED 03/28/08

FILE NAME	S:\414126\SCDI\Tranp\EXPANDED LEVEL DETAILS\camera.dgn					
TIME	10:50:44 AM			REGION NO. 10	STATE WASH	FED.AID PROJ.NO.
DATE	7/1/2009					
PLOTTED BY	tranp			JOB NUMBER		
DESIGNED BY						
ENTERED BY						
CHECKED BY				CONTRACT NO.		LOCATION NO.
PROJ. ENGR.						
REGIONAL ADM.		REVISION	DATE	BY		

P.E. STAMP BOX DATE

P.E. STAMP BOX DATE

Washington State Department of Transportation

Plot 6

PLAN REF NO

SHEET OF SHEETS

CAMERA POLE HEIGHT	DEPTH OF FOUNDATION "D"		ANCHOR BOLT ASTM A449 OR F1554 GR. 105		
	3H:1V OR FLATTER	2H:1V	DIAMETER	LENGTH	BOLT CIRCLE
50'	7'-0"	9'-0"	1 1/4"	4'-4"	25 1/2"
40'	5'-6"	7'-6"	1 1/4"	4'-4"	25 1/2"
30'	4'-6"	6'-6"	1 1/4"	4'-4"	25 1/2"

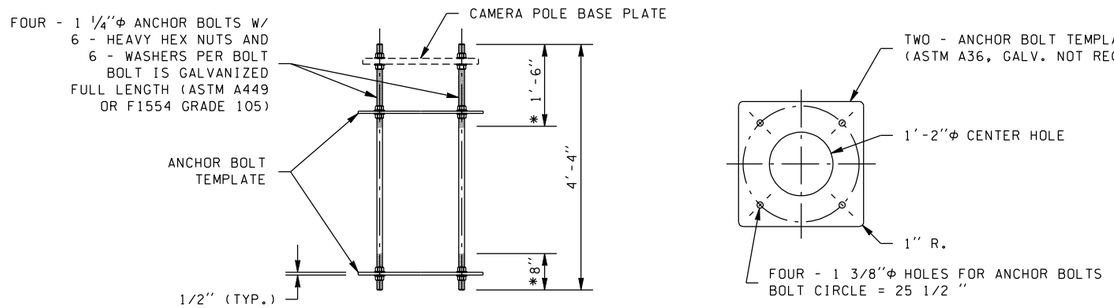

ANCHOR BOLT ASSEMBLY

* THREADED LENGTH

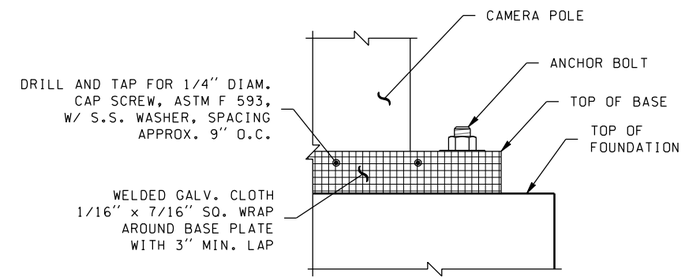

SCREEN DETAIL

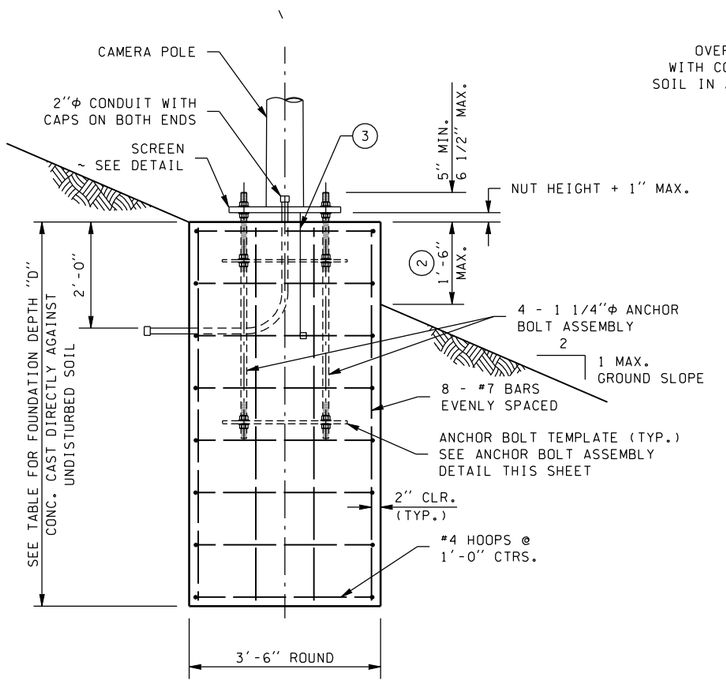

FOUNDATION REINFORCEMENT DETAIL

CONCRETE CAST DIRECTLY AGAINST UNDISTURBED EARTH.

ALTERNATE # 1

N.T.S.

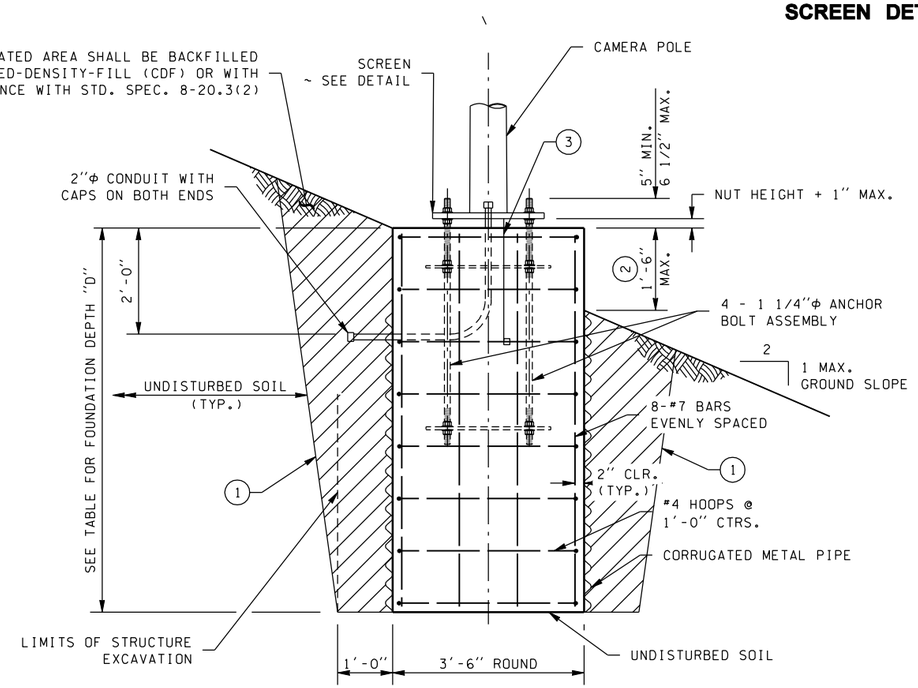

FOUNDATION REINFORCEMENT AND BACKFILL DETAIL

CONCRETE CAST INSIDE CORRUGATED METAL PIPE STAY-IN-PLACE FORM.
PAPER OR CARDBOARD FORM SHALL NOT BE USED BENEATH THE GROUND SURFACE. (2)

ALTERNATE # 2

N.T.S.

GENERAL NOTES:

1. THESE FOUNDATIONS ARE DESIGNED FOR A MINIMUM OF 1,500 PSF ALLOWABLE LATERAL BEARING PRESSURE FOR THE SOIL. A SPECIAL FOUNDATION SHALL BE REQUIRED FOR SOIL WITH LOWER ALLOWABLE LATERAL BEARING PRESSURE THAN 1,500 PSF.
2. THESE FOUNDATIONS ARE DESIGNED FOR INSTALLATION ON LEVEL GROUND, OR ON SLOPING GROUND NOT TO EXCEED 2:1 SLOPES. STEEPER THAN 2:1 REQUIRE A SPECIAL DESIGN.
3. FOUNDATION CONSTRUCTED WITHIN ECOLOGY EMBANKMENTS SHALL BE INCREASED IN DEPTH BY THE DEPTH OF THE ECOLOGY EMBANKMENT.

DESIGN CRITERIA:
2001 AASHTO STANDARD SPECIFICATIONS FOR STRUCTURAL SUPPORTS FOR HIGHWAY SIGNS, LUMINAIRES AND TRAFFIC SIGNALS WITH INTERIM REVISIONS 2002 AND 2003.
WIND VELOCITY:
90 MPH
MAXIMUM POLE DEFLECTION SHALL NOT EXCEED 0.7" IN 30 MPH AND 1.4" IN 70 MPH WIND.
LOADING:
1.) CAMERA - EFFECTIVE PROJECT AREA = 4.00 SQ. FT. @ 2'-0" ABOVE POLE TOP.
2.) DISH - 1'-0"Φ @ POLE TOP LEVEL.

(1) SHORING OR EXTRA EXCAVATION AS REQUIRED.

(2) FOUNDATION TOP (1'-6") SHALL BE FORMED TO CREATE A SMOOTH CONCRETE SURFACE. ALL EXPOSED FORMING SHALL BE REMOVED UPON COMPLETION OF FOUNDATION CONSTRUCTION.

(3) GROUNDING CONDUCTOR #4 AWG STRANDED COPPER WITH 3'-0" MIN. SLACK. CLAMP CONDUCTOR TO REBAR WITH LISTED CONDUCTOR SUITABLE FOR USE EMBEDDED IN CONCRETE. ROUTE CONDUCTOR TO CAMERA POLE GROUNDING STUD.

MASTER DETAIL REVISED 03/28/06

FILE NAME	S:\414126\SCDI\Tranp\EXPANDED LEVEL DETAILS\camera.dgn				REGION NO.	STATE	FED.AID PROJ.NO.
TIME	10:50:44 AM				10	WASH	
DATE	7/1/2009				JOB NUMBER		
PLOTTED BY	tranp						
DESIGNED BY					CONTRACT NO.		LOCATION NO.
ENTERED BY							
CHECKED BY							
PROJ. ENGR.							
REGIONAL ADM.		REVISION	DATE	BY			

P.E. STAMP BOX DATE

P.E. STAMP BOX DATE

Washington State Department of Transportation

Plot 7

PLAN REF NO

SHEET OF SHEETS

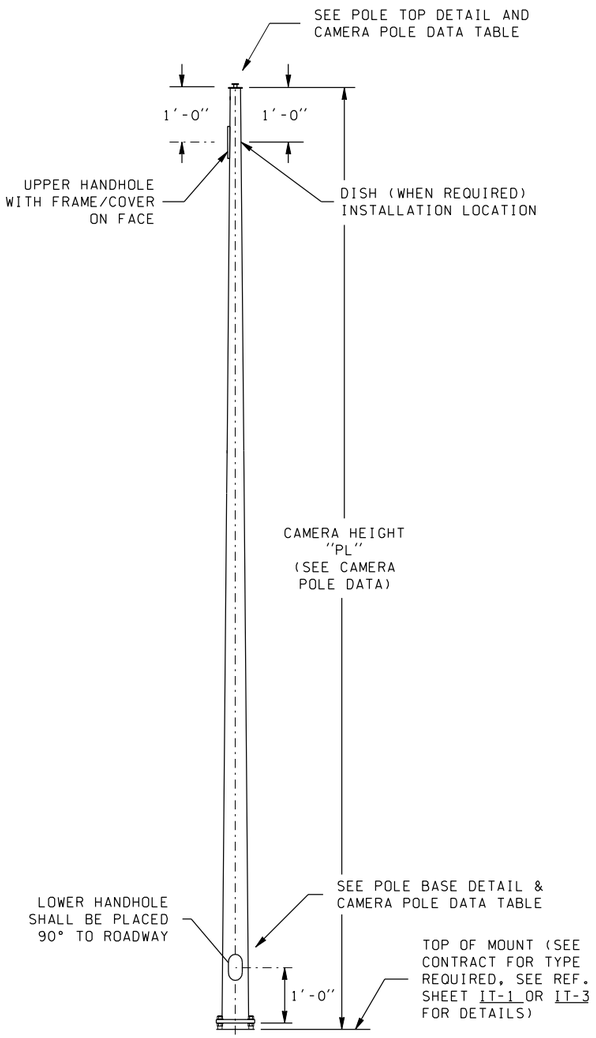

CAMERA POLE

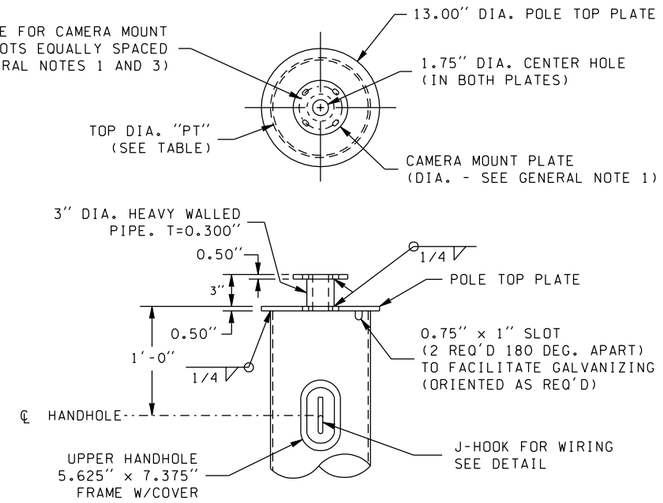

POLE TOP DETAIL

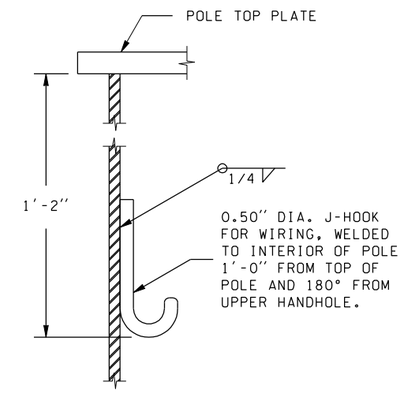

J-HOOK FOR WIRING

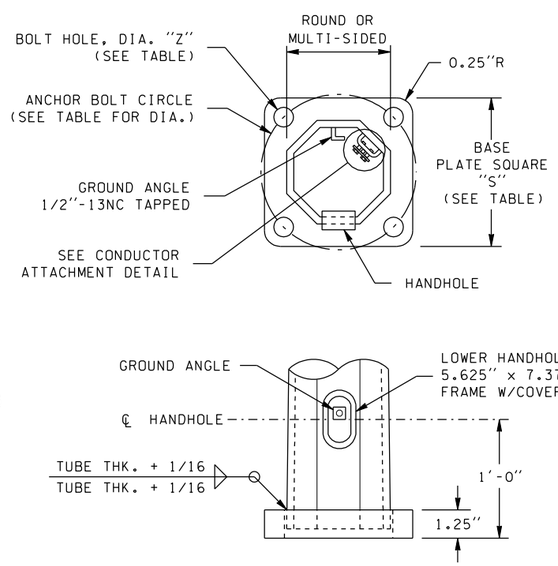

POLE BASE DETAIL

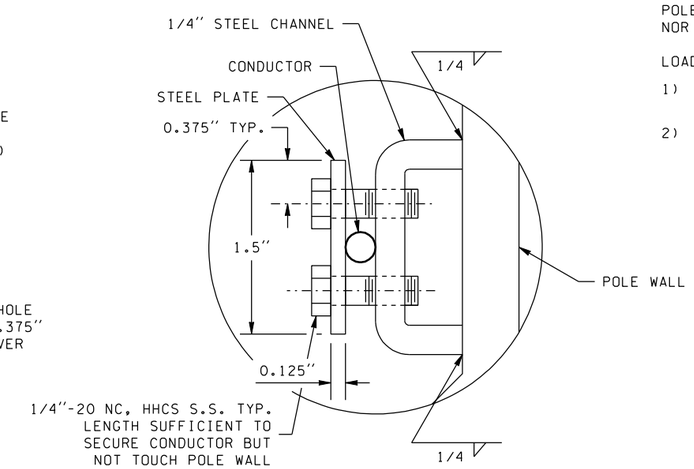

CONDUCTOR ATTACHMENT DETAIL

CONDUCTOR ATTACHMENTS DETAILS
MAY VARY PER MANUFACTURER

CAMERA POLE DATA

CAMERA HEIGHT "PL" (FT)	POLE MOUNT TYPE	QTY.	POLE TUBE	POLE BASE			ANCHOR BOLT
			TOP DIA. "PT" (IN)	SQUARE "S" (IN)	BOLT CIRCLE (IN)	HOLE "Z" (IN)	DIA. (IN)
15	ELBOW		8.50	12.00	12.00	1.06	1.00
20	ELBOW		8.50	12.00	12.00	1.06	1.00
30	ELBOW		9.00	25.00	25.50	1.38	1.25
30	GROUND		9.00	25.00	25.50	1.38	1.25
40	ELBOW		9.00	25.00	25.50	1.38	1.25
40	GROUND		9.00	25.00	25.50	1.38	1.25
50	ELBOW		10.00	25.00	25.50	1.38	1.25
50	GROUND		10.00	25.00	25.50	1.38	1.25

GENERAL NOTES:

1. VERIFY POLE TOP CAMERA PLATE, CAMERA MOUNT PLATE, BOLT CIRCLE, AND BOLT HOLES ARE ADEQUATE FOR THE REQUIRED CAMERA PRIOR TO RELEASING POLES FOR MANUFACTURING.
2. STEEL SHALL BE GALVANIZED AFTER FABRICATION PER ASTM A123 AND A153. FASTENERS LESS THAN 0.50" IN DIAMETER SHALL BE STAINLESS OR BRASS.
3. ATTACH CAMERA TO MOUNT PLATE USING FOUR (4) 3/8"-16UNC x 1.75" STAINLESS STEEL BOLTS WITH EIGHT (8) STAINLESS STEEL WASHERS AND FOUR (4) LOCK-NUTS WITH NYLON INSERTS.

DESIGN CRITERIA:

2001 AASHTO STANDARD SPECIFICATIONS FOR STRUCTURAL SUPPORTS FOR HIGHWAY SIGNS, LUMINAIRES, AND TRAFFIC SIGNALS WITH INTERIM REVISIONS 2002 AND 2003.

WIND VELOCITY:

90 MPH
POLE DEFLECTION SHALL NEITHER EXCEED 0.7" IN 30 MPH WIND NOR 1.4" IN 70 MPH WIND.

LOADING:

1) CAMERA - EFFECTIVE PROJECT AREA = 4.00 SQ. FT. @ 2'-0" ABOVE POLE TOP.
2) DISH - 1'-0" DIA. @ POLE TOP LEVEL.

MASTER DETAIL REVISED 03/28/06

FILE NAME	S:\414126\SCDI\Tranp\EXPANDED LEVEL DETAILS\camera.dgn						
TIME	10:50:45 AM						
DATE	7/1/2009						
PLOTTED BY	tranp						
DESIGNED BY							
ENTERED BY							
CHECKED BY							
PROJ. ENGR.							
REGIONAL ADM.		REVISION	DATE	BY			

REGION NO. 10 | STATE WASH | FED.AID PROJ.NO.
JOB NUMBER
CONTRACT NO. | LOCATION NO.

P.E. STAMP BOX DATE

P.E. STAMP BOX DATE

Washington State
Department of Transportation

Plot 8
PLAN REF NO
SHEET
OF
SHEETS

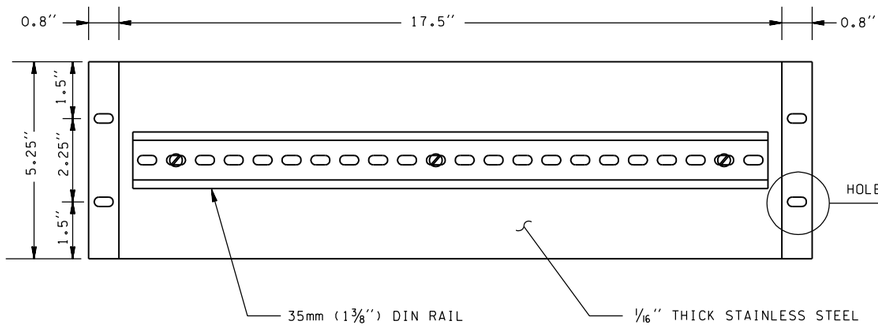

FRONT VIEW

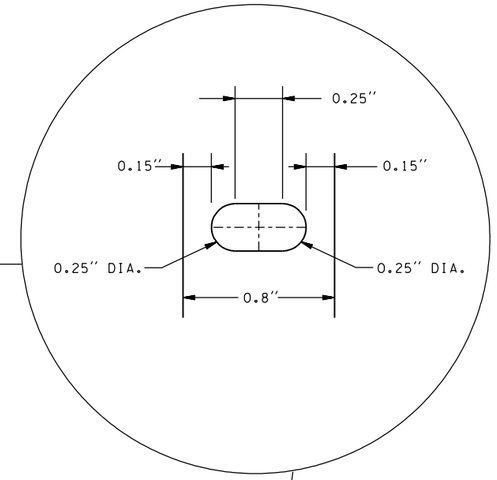

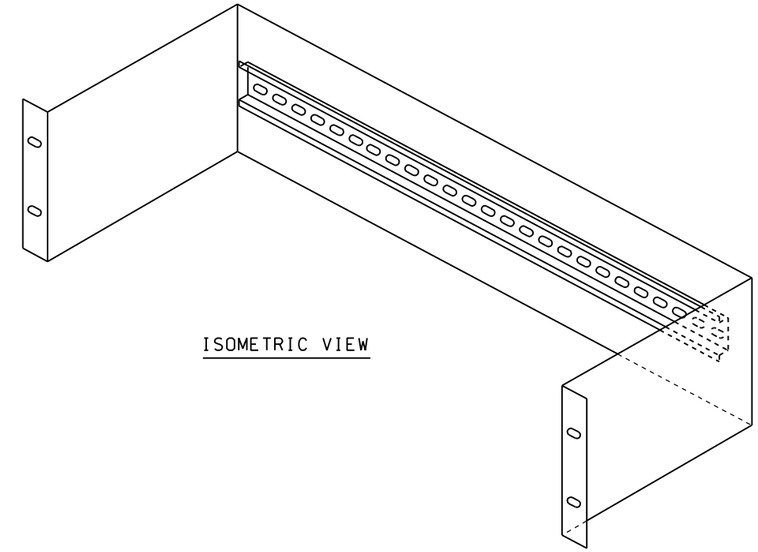

ISOMETRIC VIEW

GENERAL NOTE:

1. FOR USE IN ALL ITS MINI HUBS AND HUBS WITH ELECTRONICS DESIGNED TO BE DIN-RAIL MOUNTED.

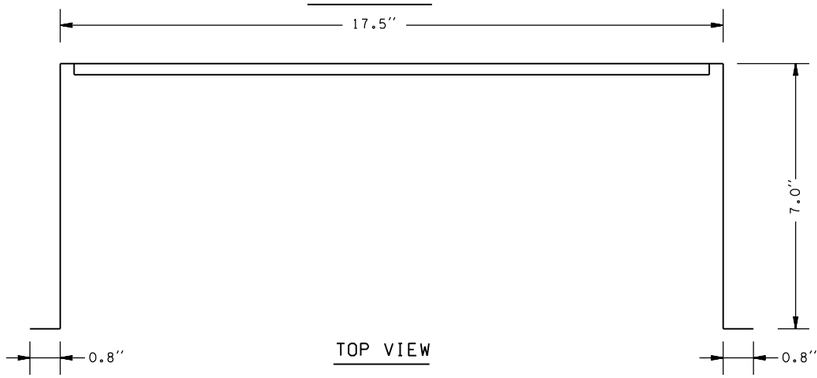

TOP VIEW

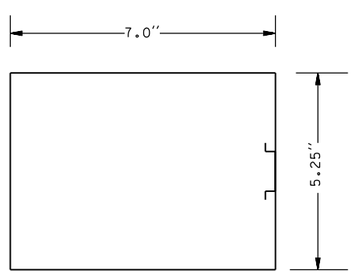

SIDE VIEW

HUB FIBER OPTIC SWITCH BRACKET DETAIL

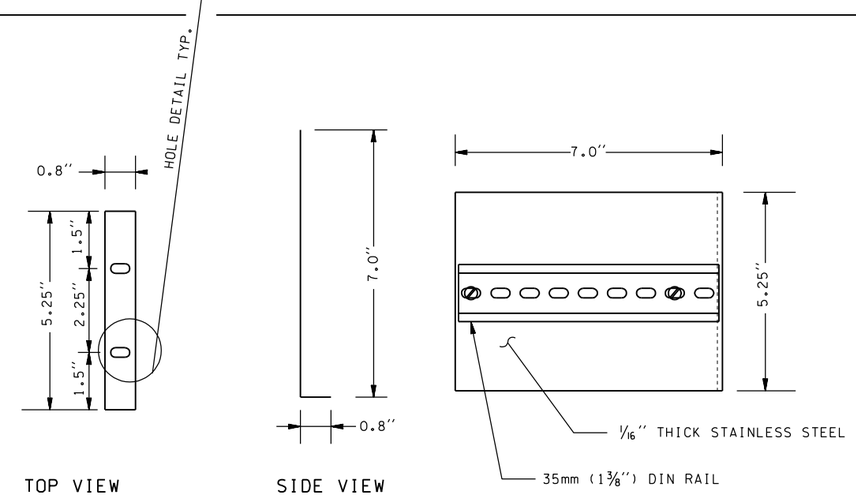

TOP VIEW

SIDE VIEW

FRONT VIEW

ISOMETRIC VIEW

GENERAL NOTE:

1. FOR USE IN ALL ITS CABINETS (NOT SIGNAL CABINETS) WITH ELECTRONICS DESIGNED TO BE DIN-RAIL MOUNTED.

CABINET FIBER OPTIC SWITCH BRACKET DETAIL

NOT TO SCALE

MASTER DETAIL REVISED 03/28/08

FILE NAME	S:\414126\SCDI\Tranp\EXPANDED LEVEL DETAILS\camera.dgn				REGION NO.	STATE	FED.AID PROJ.NO.
TIME	10:50:45 AM				10	WASH	
DATE	7/1/2009						
PLOTTED BY	tranp				JOB NUMBER		
DESIGNED BY							
ENTERED BY							
CHECKED BY					CONTRACT NO.		LOCATION NO.
PROJ. ENGR.							
REGIONAL ADM.		REVISION	DATE	BY			

P.E. STAMP BOX DATE

P.E. STAMP BOX DATE

Washington State Department of Transportation

Plot 9

PLAN REF NO

SHEET OF SHEETS

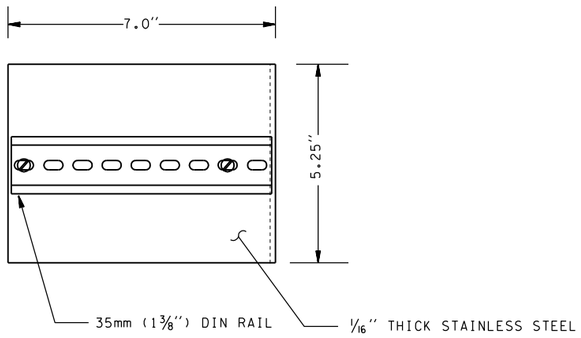

FRONT VIEW

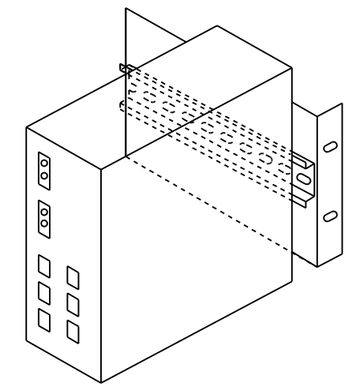

ISOMETRIC VIEW

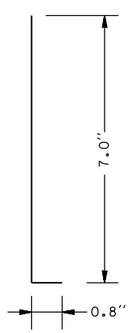

TOP VIEW

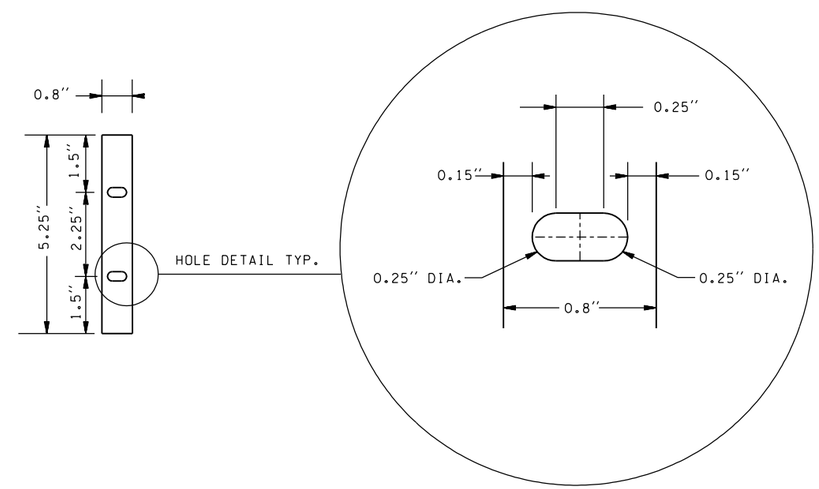

SIDE VIEW

GENERAL NOTES:

1. FOR USE IN ALL ITS CABINETS (NOT SIGNAL CABINETS) WITH ELECTRONICS DESIGNED TO BE DIN-RAIL MOUNTED.

CABINET FIBER OPTIC SWITCH BRACKET DETAIL

NOT TO SCALE

MASTER DETAIL REVISED 03/28/06

FILE NAME	S:\414126\SCDI\Tranp\EXPANDED LEVEL DETAILS\camera.dgn						Plot 10
TIME	10:50:45 AM			REGION NO. 10	STATE WASH	FED.AID PROJ.NO.	PLAN REF NO
DATE	7/1/2009						
PLOTTED BY	tranp			JOB NUMBER			SHEET
DESIGNED BY							OF
ENTERED BY							
CHECKED BY				CONTRACT NO.		LOCATION NO.	SHEETS
PROJ. ENGR.							
REGIONAL ADM.		REVISION	DATE	BY			

P.E. STAMP BOX DATE

P.E. STAMP BOX DATE

Washington State Department of Transportation