DEPARTMENT OF THE ARMY
SEATTLE DISTRICT, CORPS OF ENGINEERS
P.O. BOX 3755
SEATTLE, WASHINGTON 98124-3755

REPLY TO
ATTENTION OF

Regulatory Branch

JUL 2 0 2012

Ms. Kerry Pihlstrom
Washington State Department of Transportation
600 Stewart Street, Suite 520
Seattle, Washington 98101

Reference: NWS-2008-1246
WA St Dept of Transportation

Dear Ms. Pihlstrom:

We have received your request to modify the approved plans for the above-referenced Department of the Army permit. The original plans dated February 24, 2012, were to replace 5.2 miles of the State Route (SR) 520 corridor between Interstate 5 (I-5) and the City of Medina in wetlands and the waters of Portage Bay, Union Bay, and Lake Washington at the Cities of Seattle and Medina, King County, Washington. The modification consists of permanently impacting Lake Washington and Wetland LWN-3 to conduct seven geotechnical borings and temporarily impacting 0.16 acre of Lake Washington around Pier 1 to install sheet pile. Your request for a permit modification is approved. Enclosed are the approved modified plans dated July 10, 2012, which supersede plans authorized by the Secretary of the Army on March 22, 2012.

All other terms and conditions contained in the original permit remain in full force and effect. If you have any questions, please contact Ms. Rebecca McAndrew at rebecca.e.mcandrew@usace.army.mil or at (206) 764-6912.

BY AUTHORITY OF THE SECRETARY OF THE ARMY:

for Bruce A. Estok
Colonel, Corps of Engineers
District Engineer

Enclosure

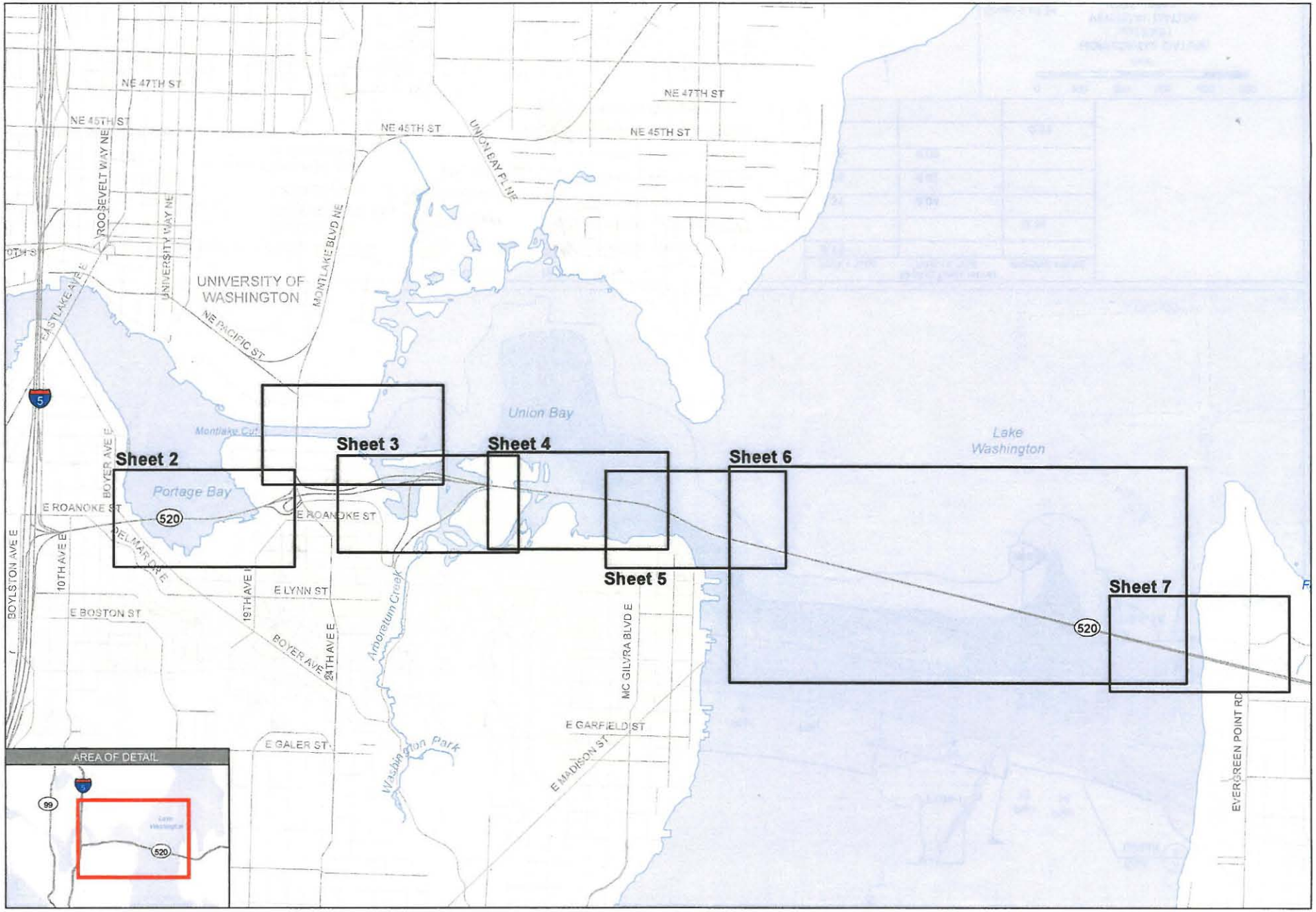

SR520 - I-5 TO MEDINA
I-5 to Medina: Bridge Replacement and HOV Project

Washington State Department of Transportation

PERMIT DRAWINGS

PURPOSE: To improve mobility for people and goods across Lake Washington within the SR 520 corridor in a manner that is safe, reliable, and cost-effective, while mitigating impacts on affected neighborhoods and the environment.

REFERENCE: NWS-2008-1246
APPLICANT: WSDOT

IN: Wetlands, Streams, and Lake WA
AT: Cities of Seattle and Medina
COUNTY: King **STATE:** WA
SECTION: 22 **TOWNSHIP:** 25N
RANGE: 04E
LATITUDE: 47.64
LONGITUDE: -122.28
DATE: July 10, 2012

N W E S

0 1,000 2,000
Feet

HORIZONTAL DATUM: nad 83/91
VERTICAL DATUM: COE - 1919

Sheet 1 of 24

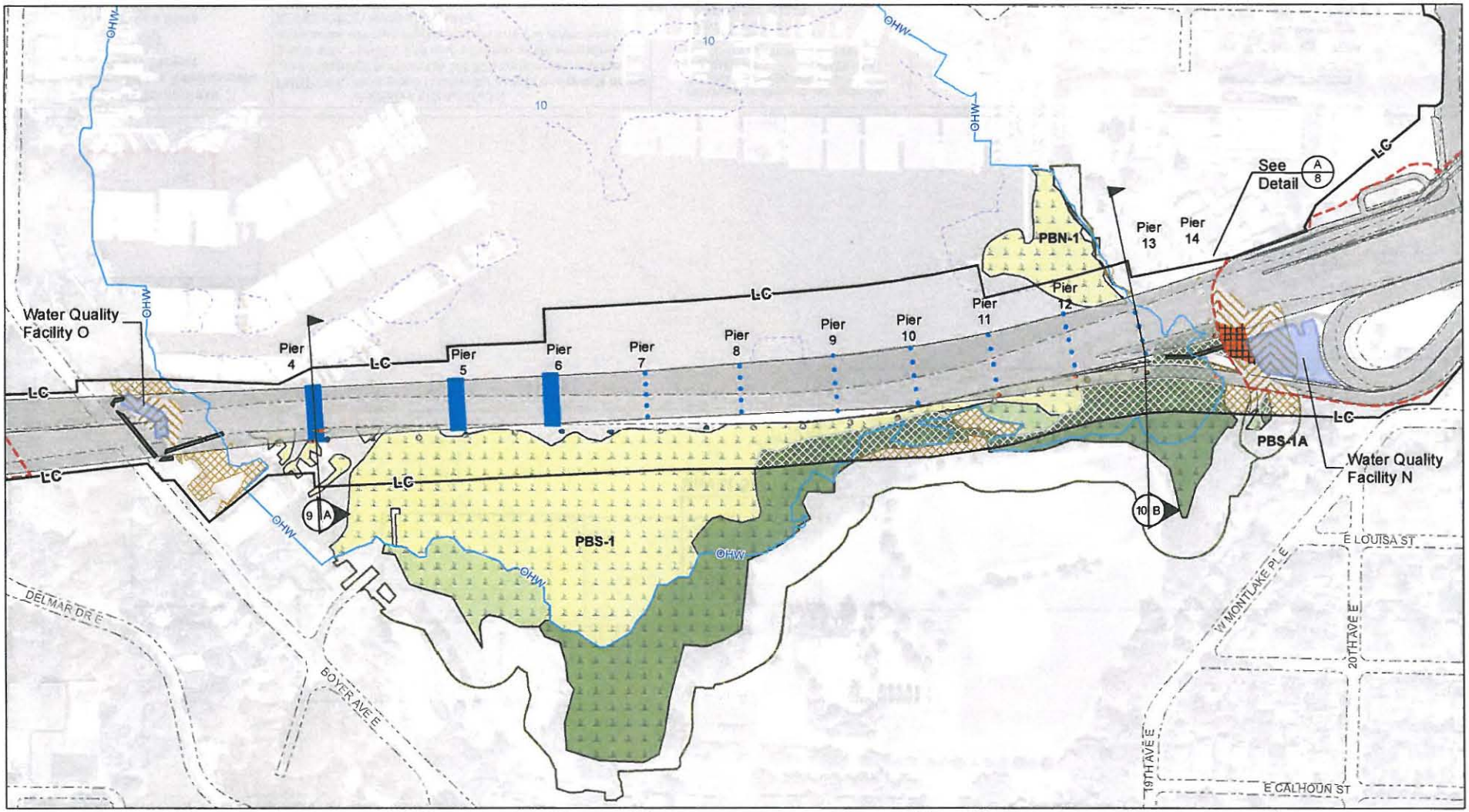

Proposed Edge of Pavement
Water Quality Facility
Drainage Pipe, Outfall, Ditch
Proposed Cut/Fill Line
Retaining Wall
LC Limits of Construction

Anchor and Cable
OHW Ordinary High Water Mark (21.85')
5-ft Bathymetry
Existing Edge of Pavement

Wetland Class
Aquatic Bed
Emergent
Forest/Shrub
Wetland Buffer

Impact Type
Permanent Wetland Impact
Permanent Lakebed Impact
Permanent Buffer Impact
Temporary Wetland Clearing
Temporary Buffer Clearing
Temporary Lakebed Impact
Temporary Wetland Fill

Impact Table (acre)

PBS-1 Total	PBS-1A Total	BRIDGE PIERS
0.13		
		0.34
0.31	0.04	
1.25	0.02	
0.65	0.08	
		0.01
0.03		

SR520 - I-5 TO MEDINA
I-5 to Medina: Bridge Replacement and HOV Project
Washington State Department of Transportation

PERMIT DRAWINGS
PURPOSE: To improve mobility for people and goods across Lake Washington within the SR 520 corridor in a manner that is safe, reliable, and cost-effective, while mitigating impacts on affected neighborhoods and the environment.
REFERENCE: NWS-2008-1246
APPLICANT: WSDOT

IN: Wetlands, Streams, and Lake WA
AT: Cities of Seattle and Medina
COUNTY: King **STATE:** WA
DATE: July 10, 2012

N W E S

0 100 200 300 400 500
Feet
HORIZONTAL DATUM: nad 83/91
VERTICAL DATUM: COE - 1919

Sheet 2 of 24

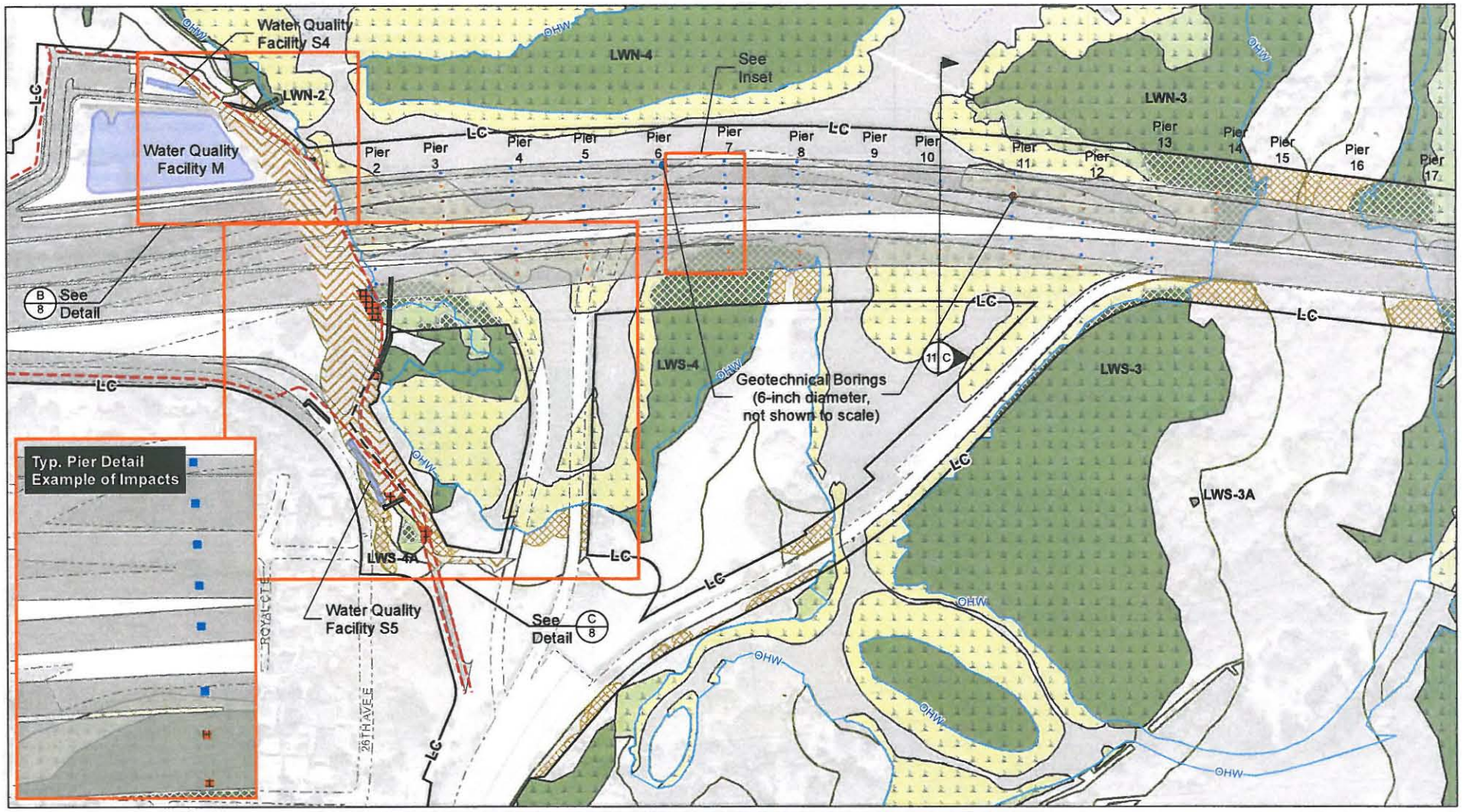

Proposed Edge of Pavement
Water QualityStormwater Facility
Drainage Pipe, Outfall, Ditch
Proposed Cut/Fill Line
Retaining Wall
Limits of Construction
Ordinary High Water Mark (21.85')
5-ft Bathymetry
Existing Edge of Pavement

Wetland Class
Aquatic Bed
Emergent
Forest/Shrub
Wetland Buffer

Impact Type
Permanent Wetland Impact
Permanent Lakebed Impact
Permanent Buffer Impact
Temporary Wetland Clearing
Temporary Buffer Clearing
Temporary Lakebed Impact

Impact Table (acre)

LWN-2 Total	LWN-3 Total	LWS-3 Total	LWS-4 Total	LWS-4A Total	PIER 2-14
0.02	0.01	0.005	0.09	0.02	
					0.05
0.29	0.00	0.00	1.21	0.01	
0.01	0.38	0.16	0.60	0.02	
0.09	0.156	0.18	0.40	0.10	

SR520 - I-5 TO MEDINA
I-5 to Medina: Bridge Replacement and HOV Project
Washington State Department of Transportation

PERMIT DRAWINGS
PURPOSE: To improve mobility for people and goods across Lake Washington within the SR 520 corridor in a manner that is safe, reliable, and cost-effective, while mitigating impacts on affected neighborhoods and the environment.
REFERENCE: NWS-2008-1246
APPLICANT: WSDOT

IN: Wetlands, Streams, and Lake WA
AT: Cities of Seattle and Medina
COUNTY: King **STATE:** WA
DATE: July 10, 2012

N W E S

0 100 200 300 400 500
Feet

HORIZONTAL DATUM: nad 83/91
VERTICAL DATUM: COE - 1919

Sheet 3 of 24

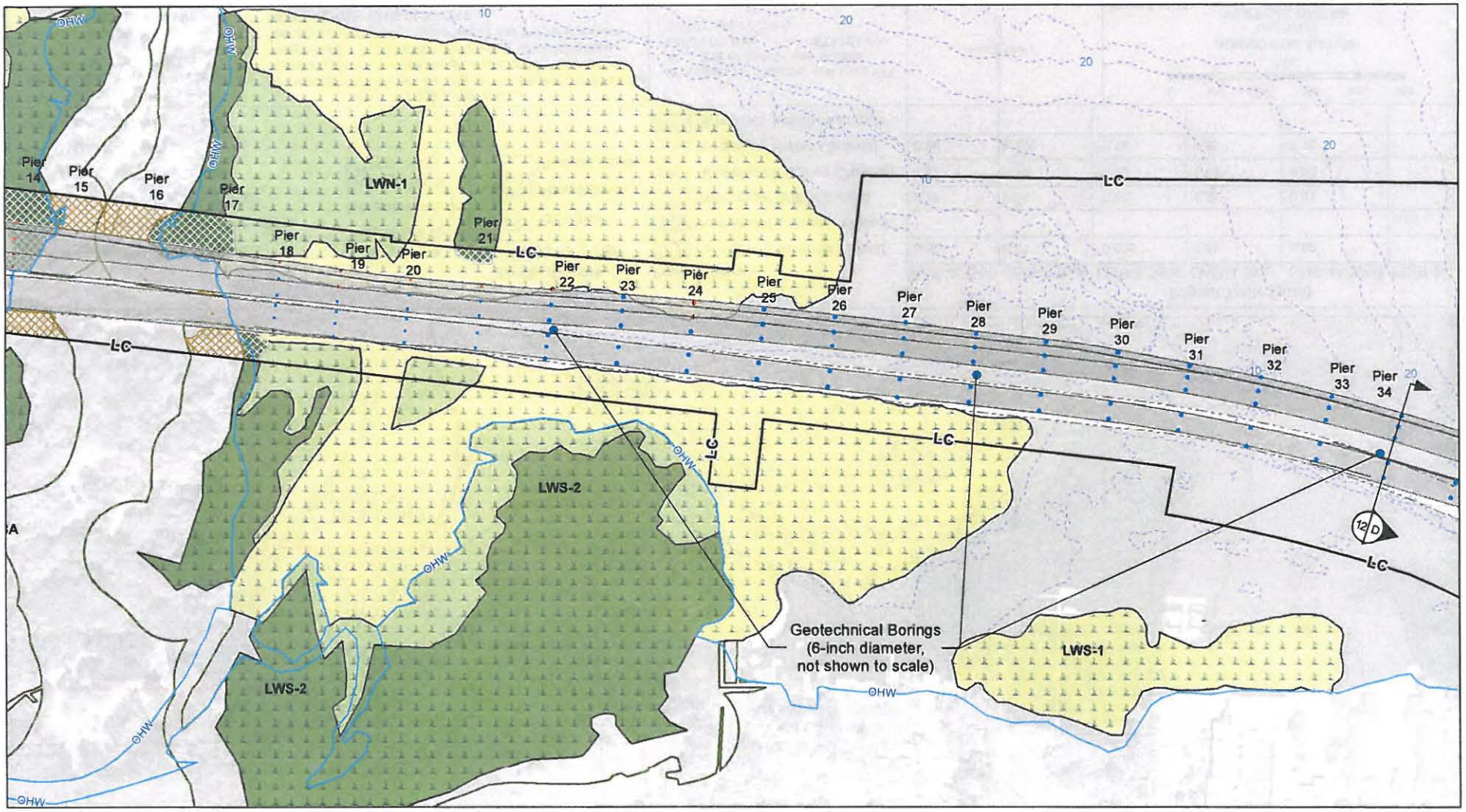

Proposed Edge of Pavement
Water Quality Stormwater Facility
Drainage Pipe, Outfall, Ditch
Proposed Cut/Fill Line
Retaining Wall
Limits of Construction

Ordinary High Water Mark (21.85')
5-ft Bathymetry
Existing Edge of Pavement

Wetland Class
Aquatic Bed
Emergent
Forest/Shrub
Wetland Buffer

Impact Type
Permanent Wetland Impact
Permanent Lakebed Impact
Permanent Buffer Impact
Temporary Wetland Clearing
Temporary Buffer Clearing
Temporary Lakebed Impact

Impact Table (acre)

	LWN-1 Total	LWS-2 Total	PIER 17 - 42
Permanent Wetland Impact	0.01	0.001	
Permanent Lakebed Impact			0.20
Permanent Buffer Impact	0.004	0.001	
Temporary Wetland Clearing	0.32	0.06	
Temporary Buffer Clearing	0.21	0.14	
Temporary Lakebed Impact			

SR520 - I-5 TO MEDINA
I-5 to Medina: Bridge Replacement and HOV Project
Washington State Department of Transportation

PERMIT DRAWINGS
PURPOSE: To improve mobility for people and goods across Lake Washington within the SR 520 corridor in a manner that is safe, reliable, and cost-effective, while mitigating impacts on affected neighborhoods and the environment.
REFERENCE: NWS-2008-1246
APPLICANT: WSDOT

IN: Wetlands, Streams, and Lake WA
AT: Cities of Seattle and Medina
COUNTY: King **STATE:** WA
DATE: July 10, 2012

N W E S

0 100 200 300 400 500
Feet

HORIZONTAL DATUM: nad 83/91
VERTICAL DATUM: COE - 1919

Sheet 4 of 24

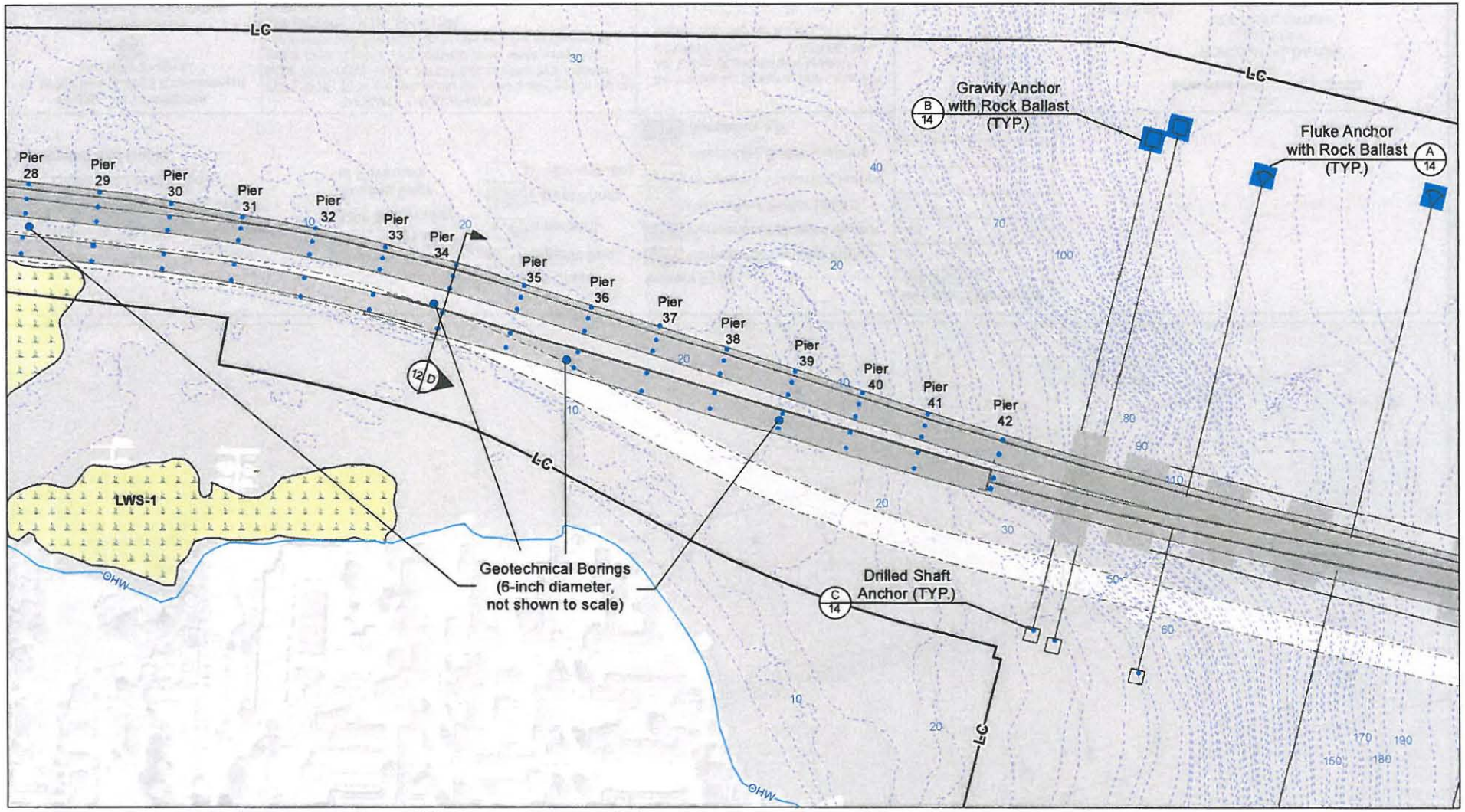

Proposed Edge of Pavement
Water Quality Stormwater Facility
Drainage Pipe, Outfall, Ditch
Proposed Cut/Fill Line
Retaining Wall
Limits of Construction

Anchor and Cable
Ordinary High Water Mark (21.85')
5-ft Bathymetry
Existing Edge of Pavement

Wetland Class
Aquatic Bed
Emergent
Forest/Shrub
Wetland Buffer

Impact Type
Permanent Wetland Impact
Permanent Lakebed Impact
Permanent Buffer Impact
Temporary Wetland Clearing
Temporary Buffer Clearing
Temporary Lakebed Impact

Impact Table (acre)

PIERS 17 - 42	ANCHORS
0.20	6.1

SR520 - I-5 TO MEDINA
I-5 to Medina: Bridge Replacement and HOV Project
Washington State Department of Transportation

PERMIT DRAWINGS
PURPOSE: To improve mobility for people and goods across Lake Washington within the SR 520 corridor in a manner that is safe, reliable, and cost-effective, while mitigating impacts on affected neighborhoods and the environment.
REFERENCE: NWS-2008-1246
APPLICANT: WSDOT

IN: Wetlands, Streams, and Lake WA
AT: Cities of Seattle and Medina
COUNTY: King **STATE:** WA
DATE: July 10, 2012

N W E S

0 100 200 300 400 500
Feet

HORIZONTAL DATUM: nad 83/91
VERTICAL DATUM: COE - 1919

Sheet 5 of 24

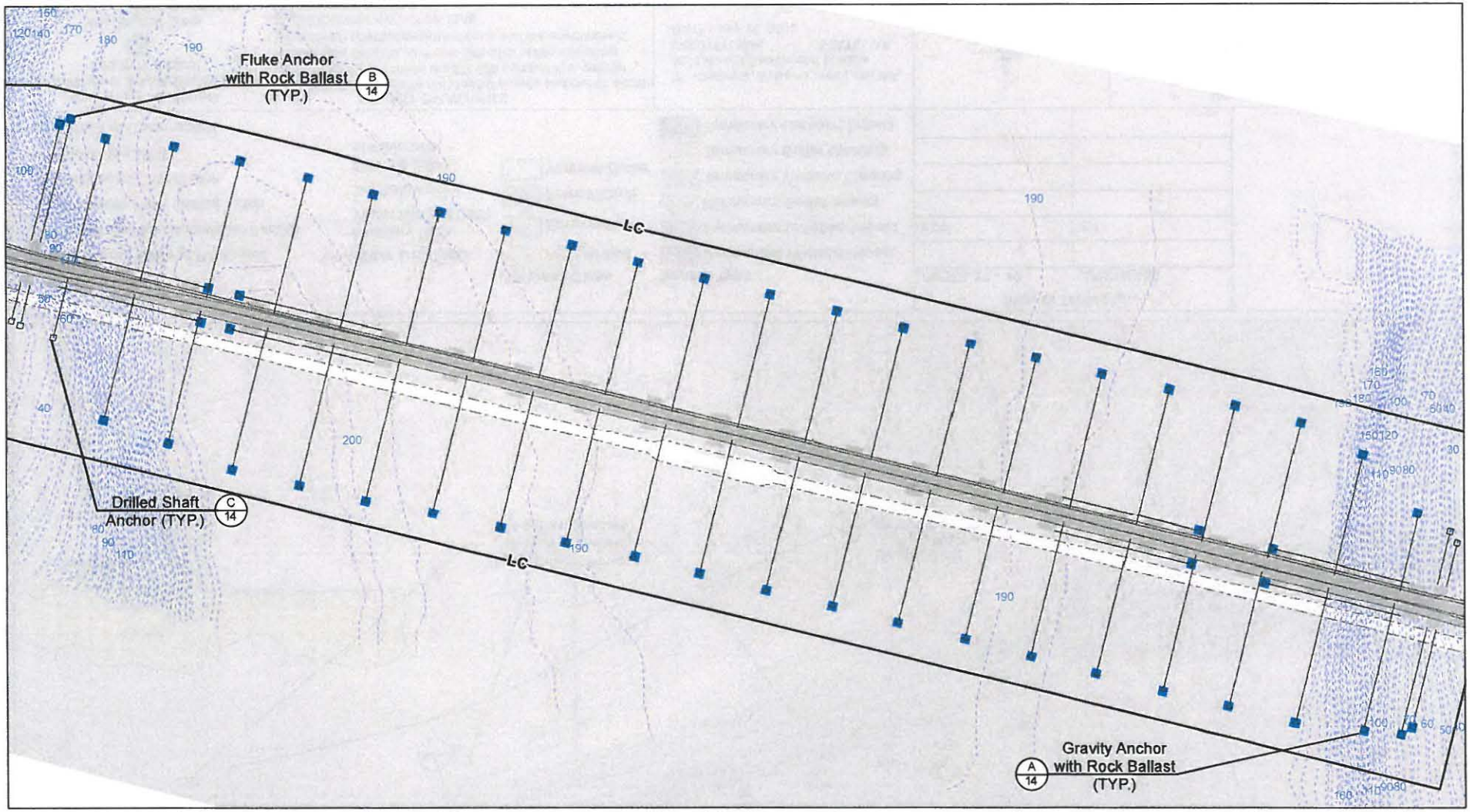

Proposed Edge of Pavement
Water Quality Stormwater Facility
Drainage Pipe, Outfall, Ditch
LC Limits of Construction
Anchor and Cable

OHW Ordinary High Water Mark (21.85')
10-ft Bathymetry
Existing Edge of Pavement

Wetland Class
Aquatic Bed
Emergent
Forest/Shrub
Wetland Buffer

Impact Type
Permanent Wetland Impact
Permanent Lakebed Impact
Permanent Buffer Impact
Temporary Wetland Clearing
Temporary Buffer Clearing
Temporary Fill

Impact Table (acre) ANCHORS
6.1

SR520 - I-5 TO MEDINA
I-5 to Medina: Bridge Replacement and HOV Project
Washington State Department of Transportation

PERMIT DRAWINGS
PURPOSE: To improve mobility for people and goods across Lake Washington within the SR 520 corridor in a manner that is safe, reliable, and cost-effective, while mitigating impacts on affected neighborhoods and the environment.
REFERENCE: NWS-2008-1246
APPLICANT: WSDOT

IN: Wetlands, Streams, and Lake WA
AT: Cities of Seattle and Medina
COUNTY: King **STATE:** WA
DATE: July 10, 2012

N W E S

0 500 1,000
Feet

HORIZONTAL DATUM: nad 83/91
VERTICAL DATUM: COE - 1919

Sheet 6 of 24

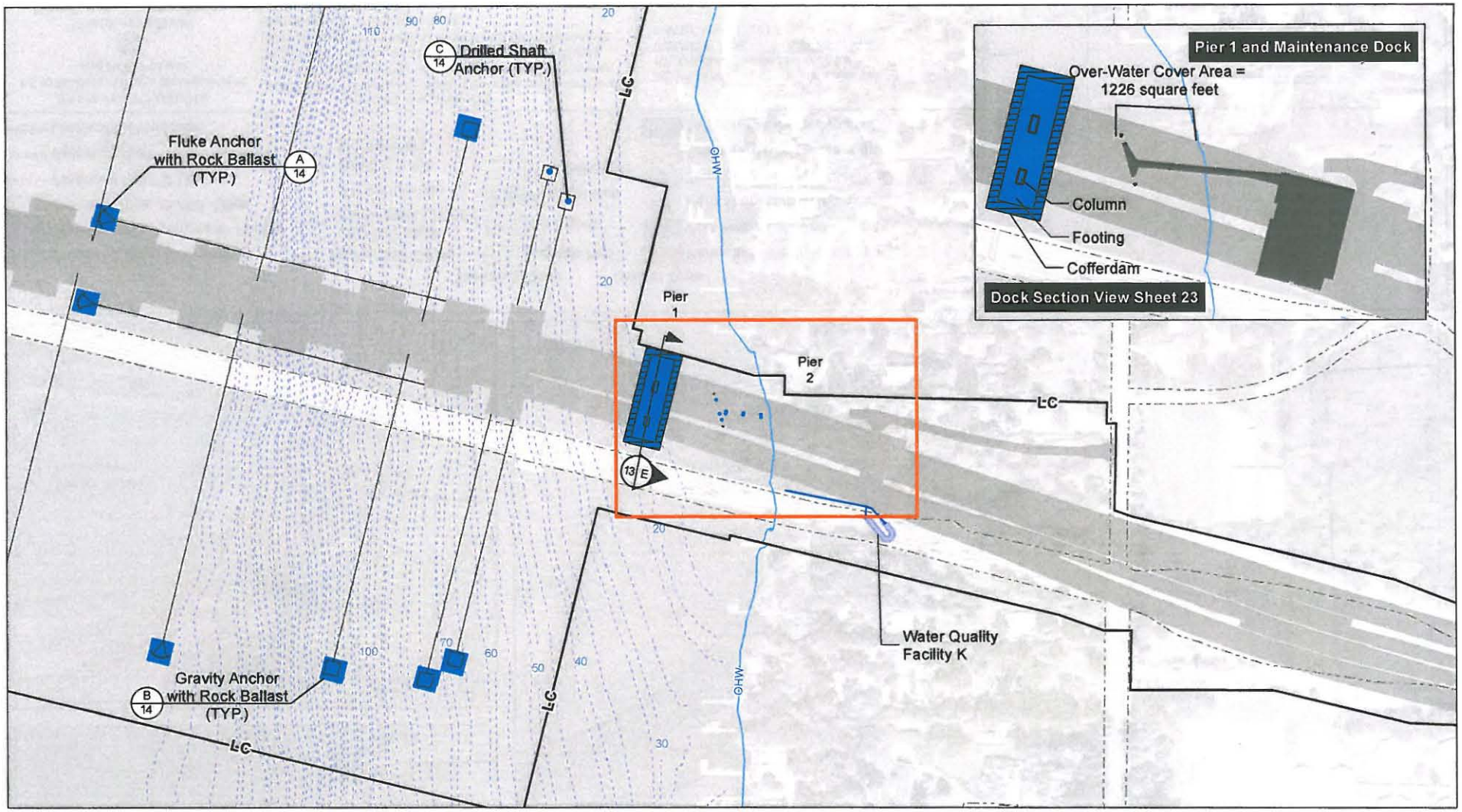

Proposed Edge of Pavement
Water Quality Stormwater Facility
Proposed Stormwater Sewer Pipe
Proposed Cut/Fill Line
Retaining Wall
LC Limits of Construction

Anchor and Cable
OHW Ordinary High Water Mark (21.85')
5-ft Bathymetry
Existing Edge of Pavement

Wetland Class
Aquatic Bed
Emergent
Forest/Shrub
Wetland Buffer

Impact Type
Permanent Wetland Impact
Permanent Lakebed Impact
Permanent Buffer Impact
Temporary Wetland Clearing
Temporary Buffer Clearing
Temporary Lakebed Impact

Impact Table (acre)

ANCHORS	PIER 1	DOCK PILES
6.1	0.22	113 (SF)
	0.16	

SR520 - I-5 TO MEDINA
I-5 to Medina: Bridge Replacement and HOV Project

Washington State Department of Transportation

PERMIT DRAWINGS
PURPOSE: To improve mobility for people and goods across Lake Washington within the SR 520 corridor in a manner that is safe, reliable, and cost-effective, while mitigating impacts on affected neighborhoods and the environment.
REFERENCE: NWS-2008-1246
APPLICANT: WSDOT

IN: Wetlands, Streams, and Lake WA
AT: Cities of Seattle and Medina
COUNTY: King **STATE:** WA
DATE: July 10, 2012

N W E S

0 100 200 300 400 500
Feet

HORIZONTAL DATUM: nad 83/91
VERTICAL DATUM: COE - 1919

Sheet 7 of 24

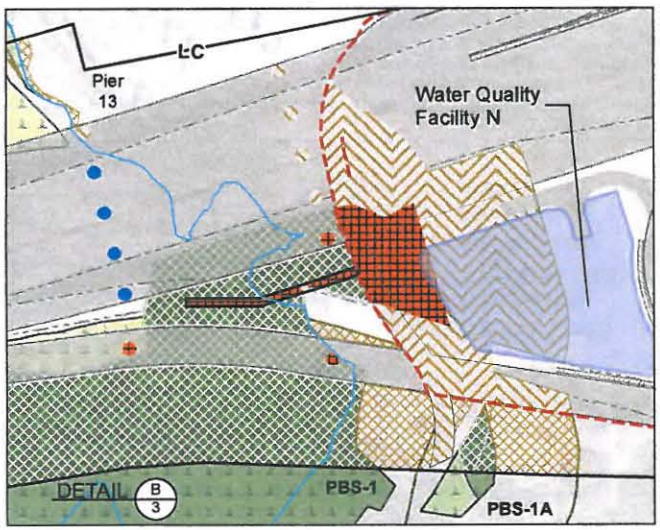

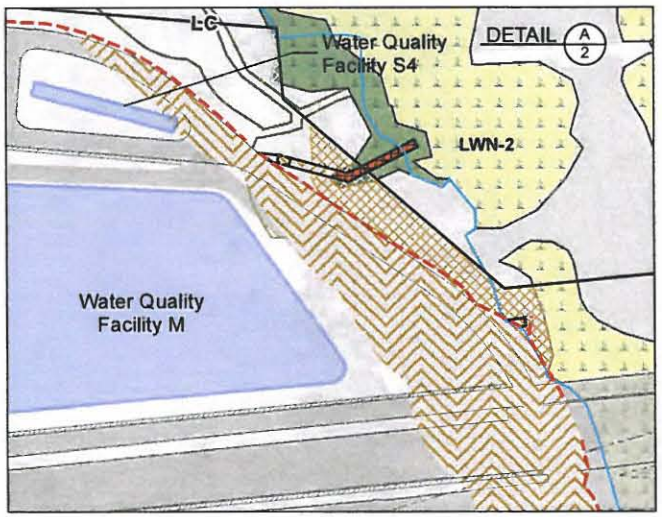

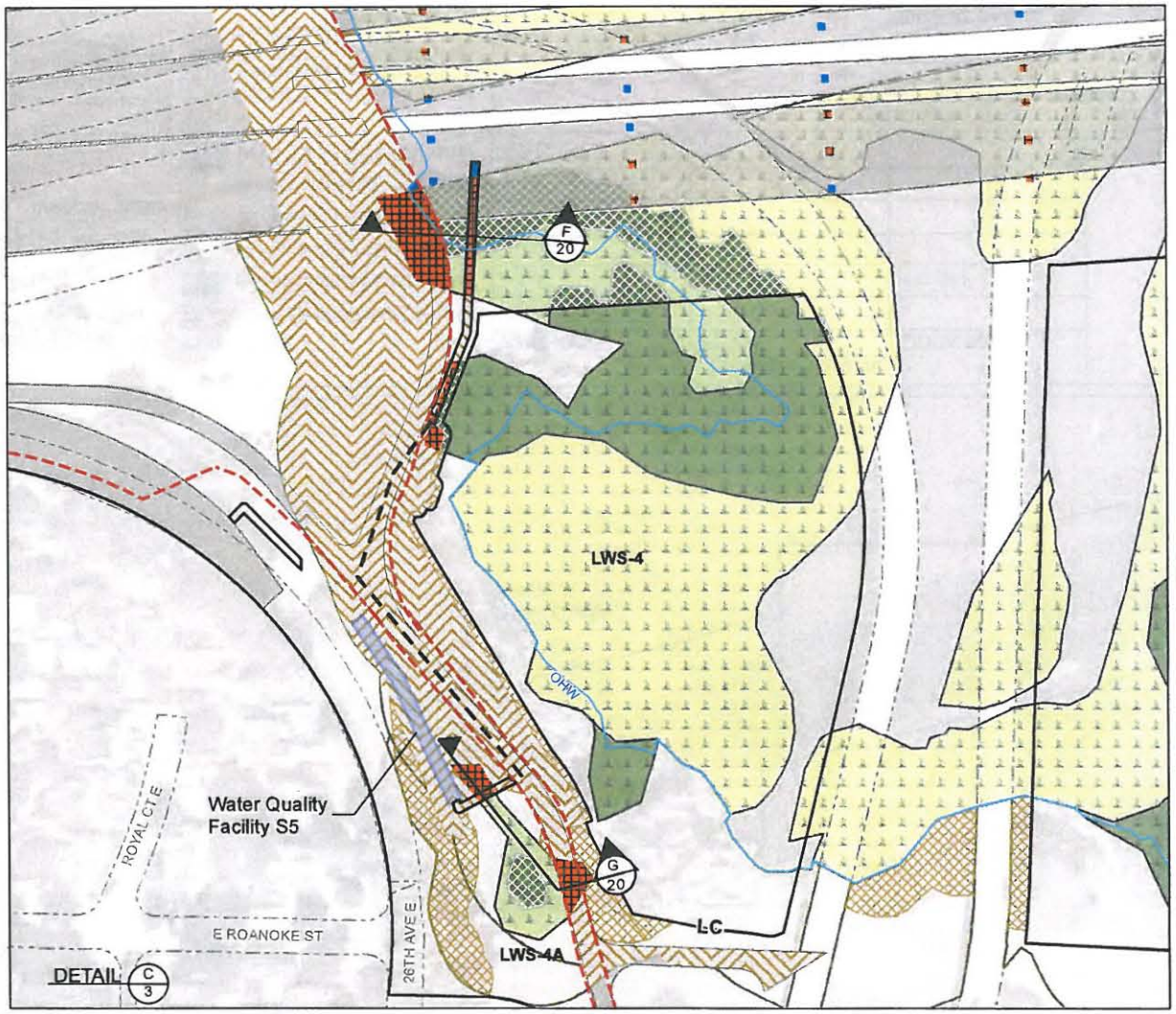

Proposed Edge of Pavement
Water Quality Stormwater Facility
Drainage Pipe, Outfall, Ditch
Proposed Cut/Fill Line
Retaining Wall
Limits of Construction

Anchor and Cable
OHW Ordinary High Water Mark (21.85')
5-ft Bathymetry
Existing Edge of Pavement

Wetland Class
Aquatic Bed
Emergent
Forest/Shrub
Wetland Buffer

Impact Type
Permanent Wetland Impact
Permanent Lakebed Impact
Permanent Buffer Impact
Temporary Wetland Clearing
Temporary Buffer Clearing
Temporary Lakebed Impact

SR520 - I-5 TO MEDINA
I-5 to Medina: Bridge Replacement and HOV Project
Washington State Department of Transportation

PERMIT DRAWINGS
PURPOSE: To improve mobility for people and goods across Lake Washington within the SR 520 corridor in a manner that is safe, reliable, and cost-effective, while mitigating impacts on affected neighborhoods and the environment.
REFERENCE: NWS-2008-1246
APPLICANT: WSDOT

IN: Wetlands, Streams, and Lake WA
AT: Cities of Seattle and Medina
COUNTY: King **STATE:** WA
DATE: July 10, 2012

N W E S

0 100 200
Feet
HORIZONTAL DATUM: nad 83/91
VERTICAL DATUM: COE - 1919

Sheet 8 of 24

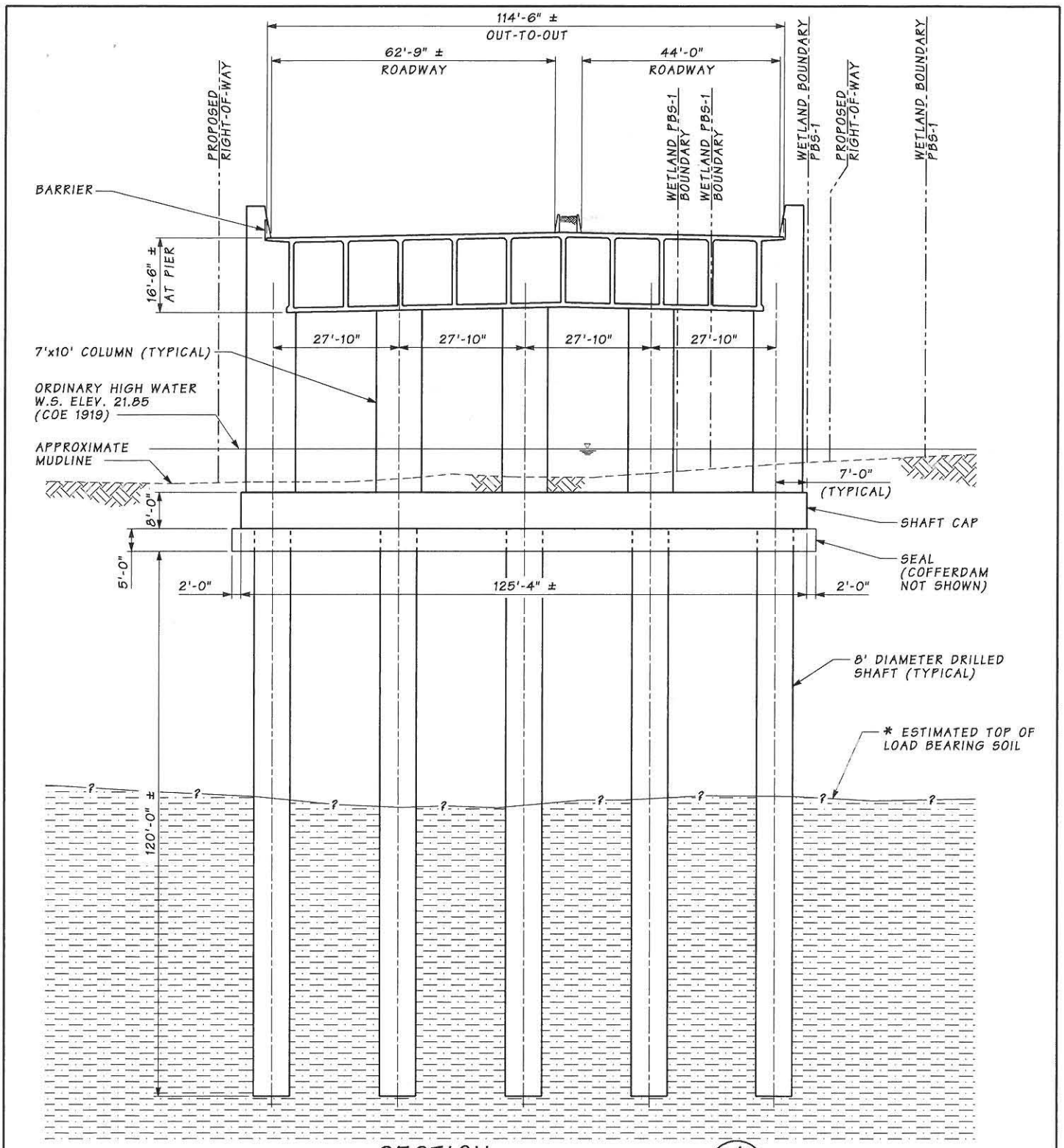

SECTION A/2

SECTION SHOWN NEAR CL PBB STA. 30+70

* THE SUBSURFACE SOIL PROFILE IS BASED ON INFORMATION OBTAINED FROM PRELIMINARY GEOTECHNICAL INVESTIGATIONS. THE LOCATIONS OF THE SUBSURFACE SOIL LAYERS HAVE BEEN ESTIMATED FROM HISTORICAL BORING LOG INFORMATION AND A SINGLE NEW BORING IN PORTAGE BAY. ADDITIONAL GEOTECHNICAL INVESTIGATIONS CURRENTLY UNDERWAY WILL REFINE THESE ESTIMATES.

SR520 – I-5 TO MEDINA **I-5 to Medina: Bridge Replacement and HOV Project** **Washington State Department of Transportation**	**PERMIT DRAWINGS** **PURPOSE:** To improve mobility for people and goods across Lake Washington within the SR 520 corridor in a manner that is safe, reliable, and cost-effective, while mitigating impacts on affected neighborhoods and the environment. **REFERENCE:** NWS-2008-1246 **APPLICANT: WSDOT**	**IN:** Wetlands, Streams, and Lake WA **AT:** Cities of Seattle and Medina **COUNTY:** King **STATE:** WA **DATE:** July 10, 2012	**HORIZONTAL DATUM:** NAD 83/91 **VERTICAL DATUM:** COE - 1919 **SHEET 9 OF 24**

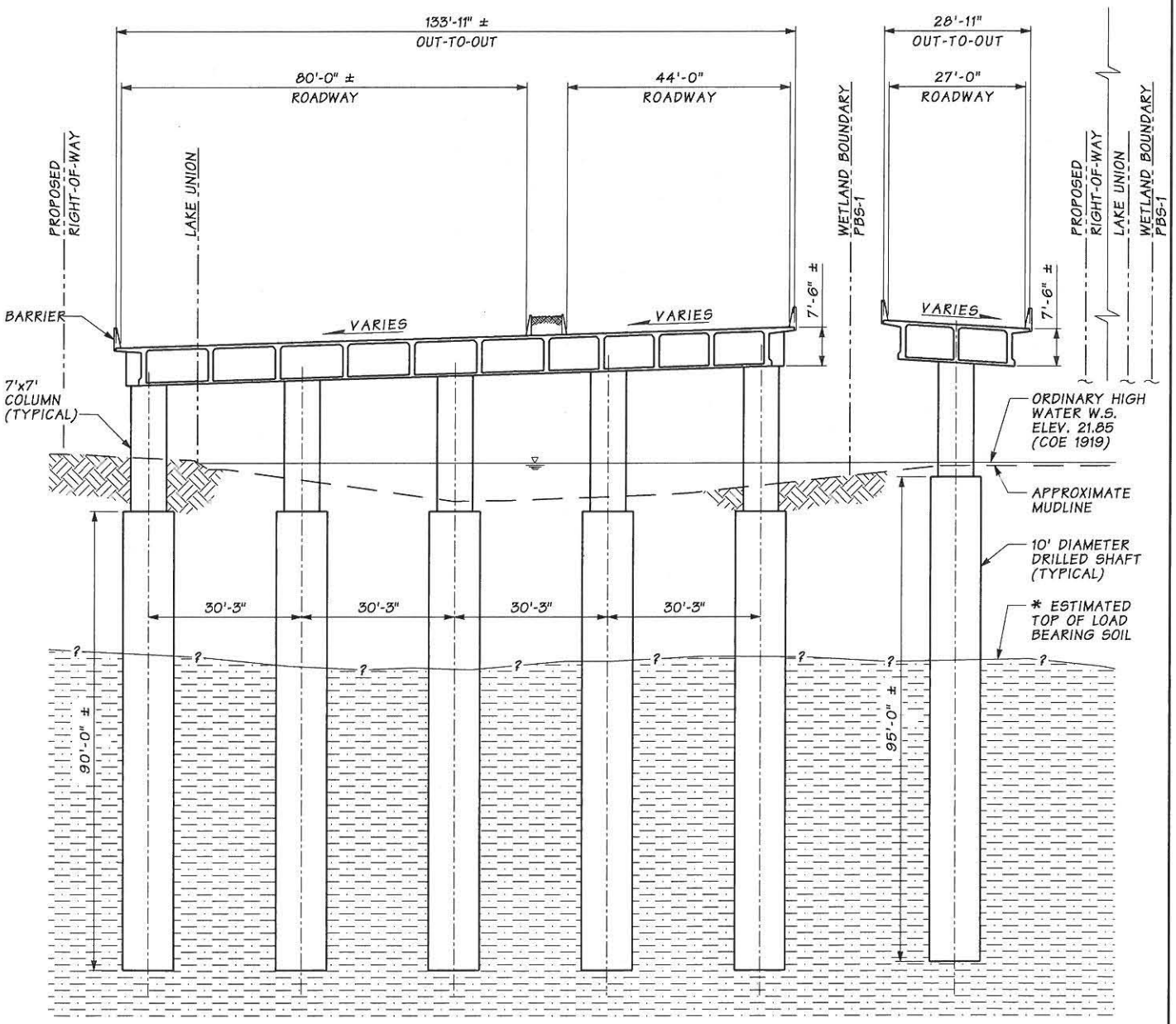

SECTION B/2

SECTION SHOWN NEAR CL PBB STA. 48+24

* THE SUBSURFACE SOIL PROFILE IS BASED ON INFORMATION OBTAINED FROM PRELIMINARY GEOTECHNICAL INVESTIGATIONS. THE LOCATIONS OF THE SUBSURFACE SOIL LAYERS HAVE BEEN ESTIMATED FROM HISTORICAL BORING LOG INFORMATION AND A SINGLE NEW BORING IN PORTAGE BAY. ADDITIONAL GEOTECHNICAL INVESTIGATIONS CURRENTLY UNDERWAY WILL REFINE THESE ESTIMATES.

SR520 – I-5 TO MEDINA **I-5 to Medina: Bridge Replacement and HOV Project** **Washington State Department of Transportation**	**PERMIT DRAWINGS** **PURPOSE:** To improve mobility for people and goods across Lake Washington within the SR 520 corridor in a manner that is safe, reliable, and cost-effective, while mitigating impacts on affected neighborhoods and the environment. **REFERENCE:** NWS-2008-1246 **APPLICANT: WSDOT**	**IN:** Wetlands, Streams, and Lake WA **AT:** Cities of Seattle and Medina **COUNTY:** King **STATE:** WA **DATE:** July 10, 2012	**HORIZONTAL DATUM:** NAD 83/91 **VERTICAL DATUM:** COE - 1919 **SHEET 10 OF 24**

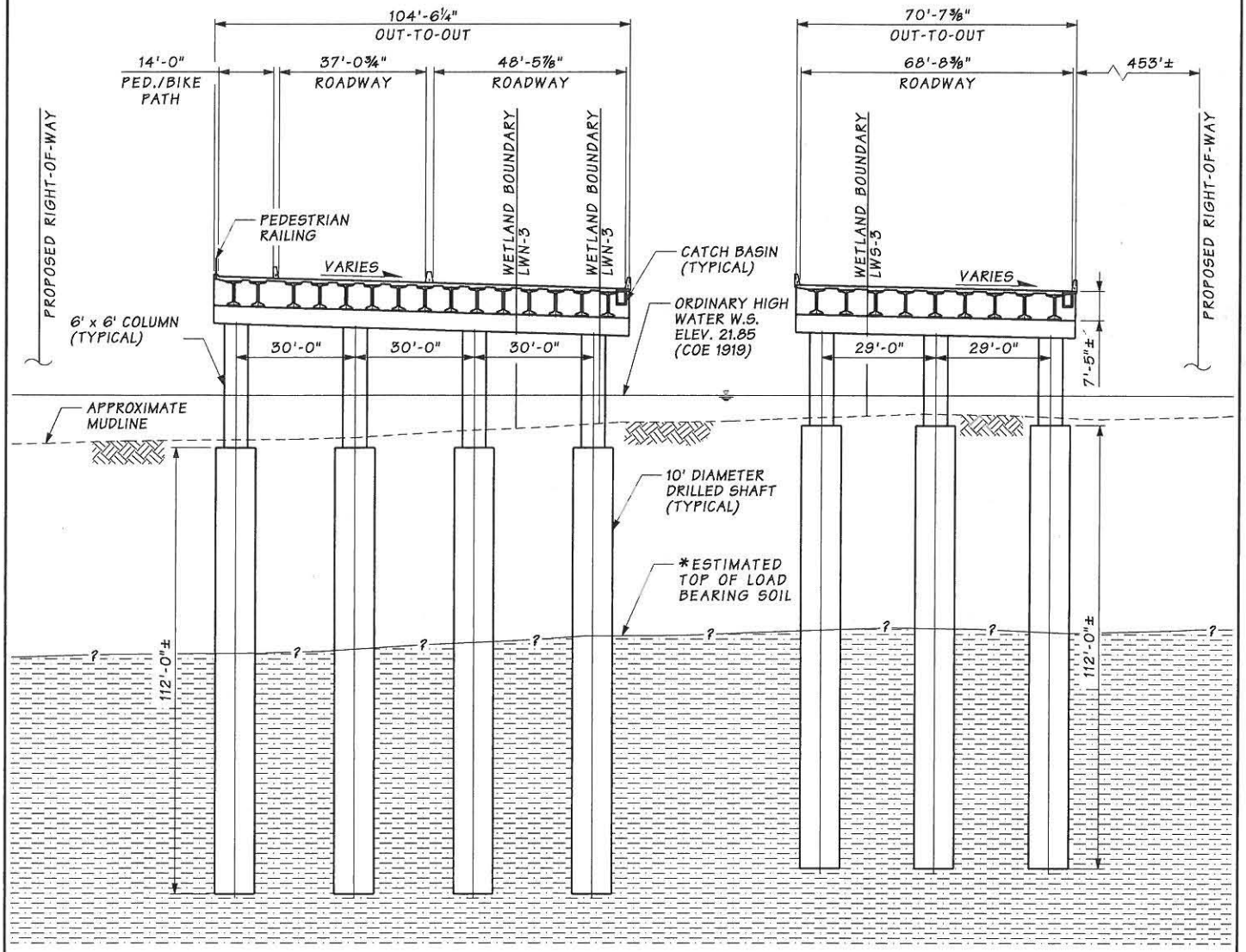

SECTION C/3

SECTION SHOWN NEAR MR STA. 82+54

* THE SUBSURFACE SOIL PROFILE IS BASED ON INFORMATION OBTAINED FROM PRELIMINARY GEOTECHNICAL INVESTIGATIONS. THE LOCATIONS OF THE SUBSURFACE SOIL LAYERS HAVE BEEN ESTIMATED FROM HISTORICAL BORING LOGS AND NEW BORING INFORMATION IN THE WEST APPROACH BRIDGE AREA. ADDITIONAL GEOTECHNICAL INVESTIGATIONS CURRENTLY UNDERWAY WILL REFINE THESE ESTIMATES.

SR520 – I-5 TO MEDINA **I-5 to Medina: Bridge Replacement and HOV Project** **Washington State Department of Transportation**	**PERMIT DRAWINGS** **PURPOSE:** To improve mobility for people and goods across Lake Washington within the SR 520 corridor in a manner that is safe, reliable, and cost-effective, while mitigating impacts on affected neighborhoods and the environment. **REFERENCE:** NWS-2008-1246 **APPLICANT:** WSDOT	**IN:** Wetlands, Streams, and Lake WA **AT:** Cities of Seattle and Medina **COUNTY:** King **STATE:** WA **DATE:** July 10, 2012	**HORIZONTAL DATUM:** NAD 83/91 **VERTICAL DATUM:** COE - 1919 **SHEET 11 OF 24**

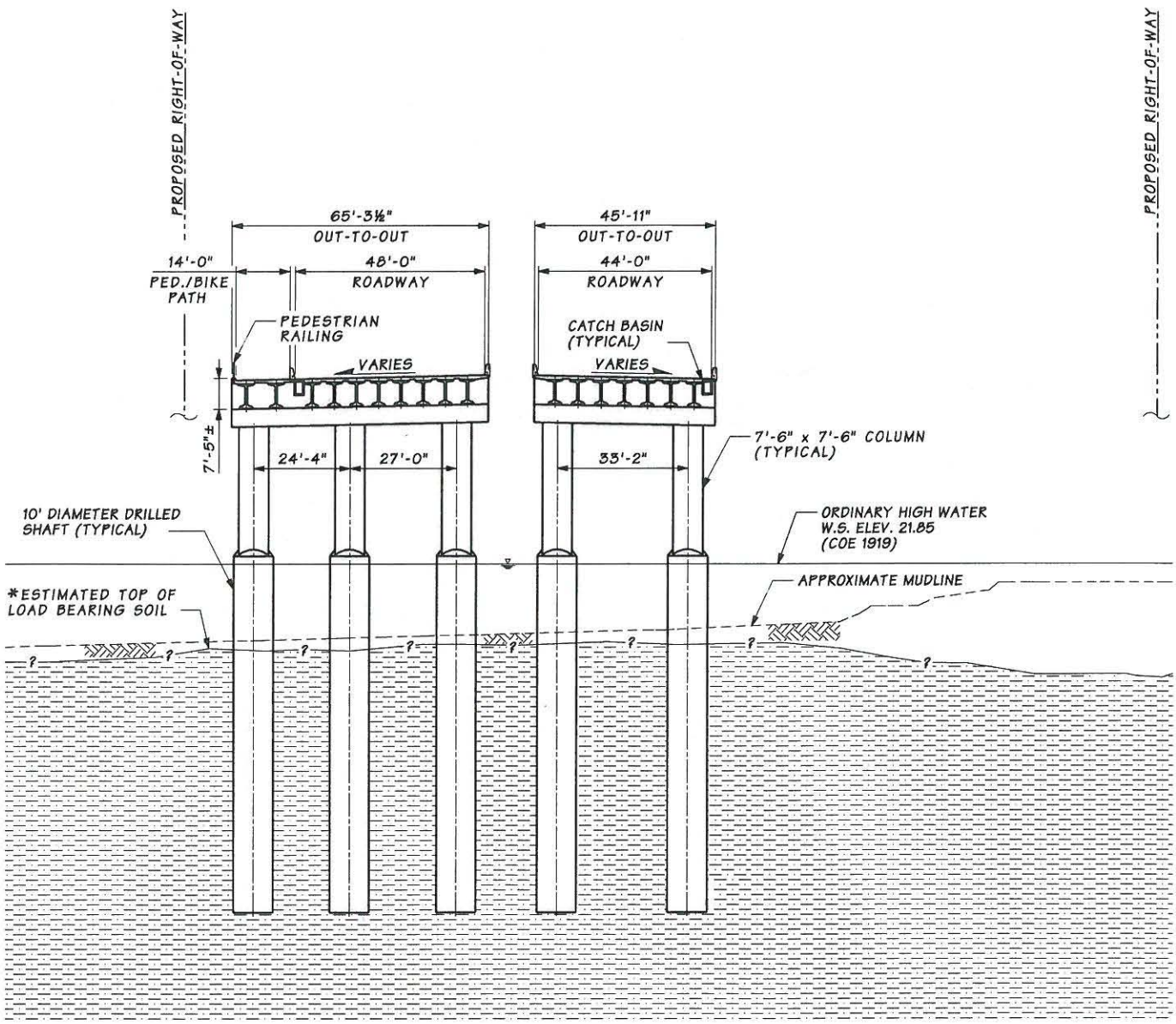

SECTION D / 4.5

SECTION SHOWN NEAR MR STA. 117+71

* THE SUBSURFACE SOIL PROFILE IS BASED ON INFORMATION OBTAINED FROM PRELIMINARY GEOTECHNICAL INVESTIGATIONS. THE LOCATIONS OF THE SUBSURFACE SOIL LAYERS HAVE BEEN ESTIMATED FROM HISTORICAL BORING LOGS AND NEW BORING INFORMATION IN THE WEST APPROACH BRIDGE AREA. ADDITIONAL GEOTECHNICAL INVESTIGATIONS CURRENTLY UNDERWAY WILL REFINE THESE ESTIMATES.

SR520 – I-5 TO MEDINA **I-5 to Medina: Bridge Replacement and HOV Project** **Washington State Department of Transportation**	**PERMIT DRAWINGS** **PURPOSE:** To improve mobility for people and goods across Lake Washington within the SR 520 corridor in a manner that is safe, reliable, and cost-effective, while mitigating impacts on affected neighborhoods and the environment. **REFERENCE:** NWS-2008-1246 **APPLICANT: WSDOT**	**IN:** Wetlands, Streams, and Lake WA **AT:** Cities of Seattle and Medina **COUNTY:** King **STATE:** WA **DATE:** July 10, 2012	**HORIZONTAL DATUM:** NAD 83/91 **VERTICAL DATUM:** COE - 1919 **SHEET 12 OF 24**

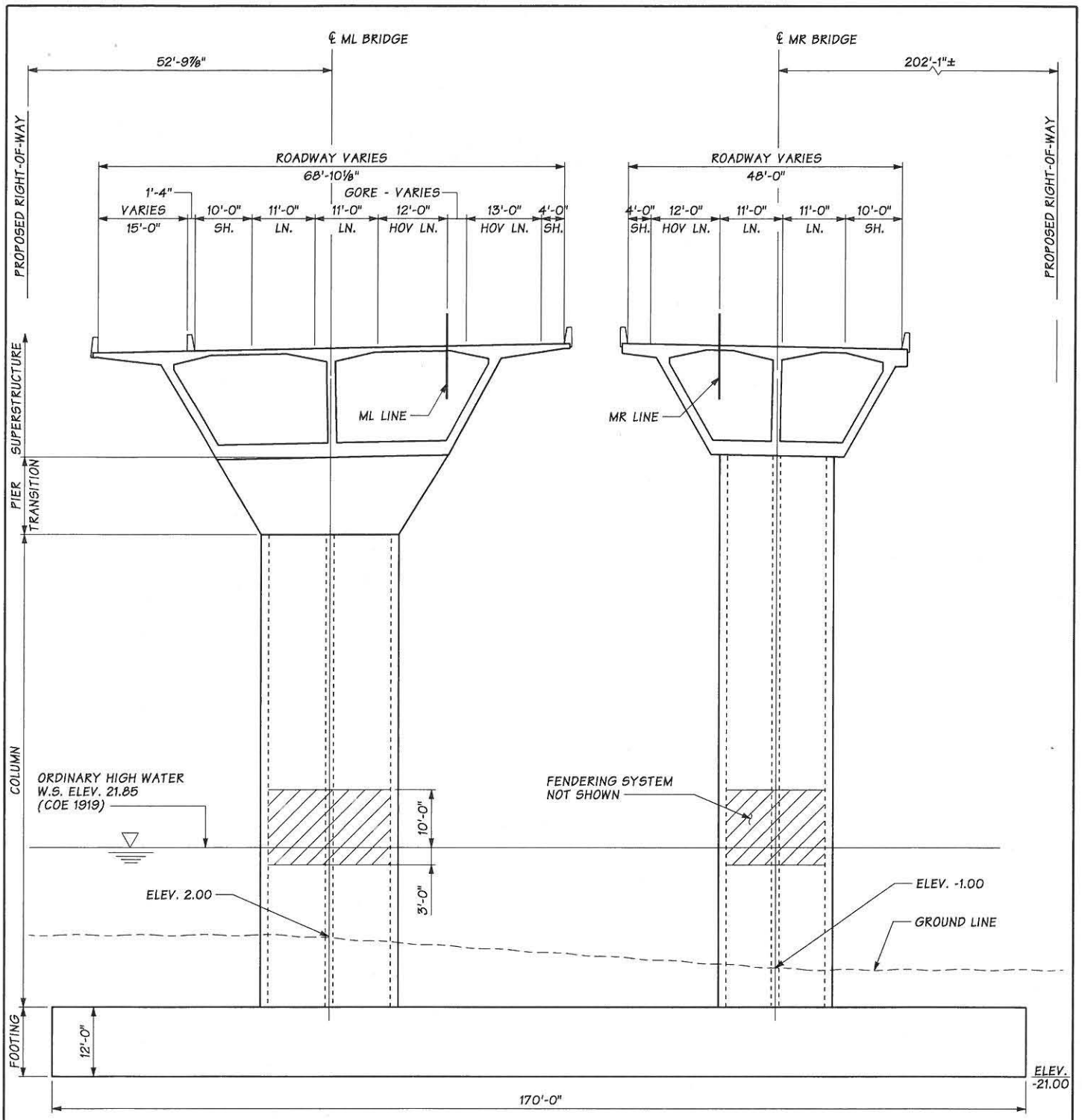

SECTION E 7

SECTION SHOWN AT ML/MR 217+88

SR520 – I-5 TO MEDINA **I-5 to Medina: Bridge Replacement and HOV Project** **Washington State Department of Transportation**	**PERMIT DRAWINGS** **PURPOSE:** To improve mobility for people and goods across Lake Washington within the SR 520 corridor in a manner that is safe, reliable, and cost-effective, while mitigating impacts on affected neighborhoods and the environment. **REFERENCE:** NWS-2008-1246 **APPLICANT: WSDOT**	**IN:** Wetlands, Streams, and Lake WA **AT:** Cities of Seattle and Medina **COUNTY:** King **STATE:** WA **DATE:** July 10, 2012	**HORIZONTAL DATUM:** NAD 83/91 **VERTICAL DATUM:** COE - 1919 **SHEET 13 OF 24**

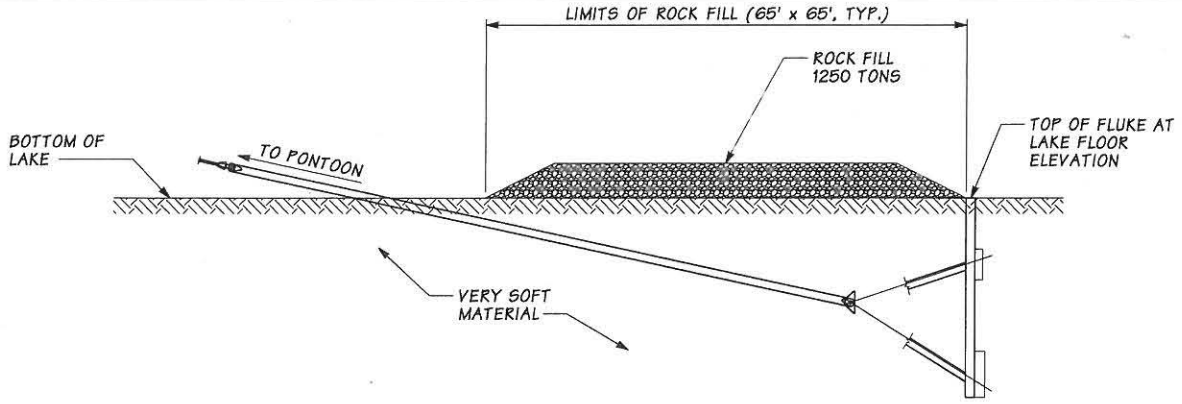

FLUKE ANCHOR
NOT TO SCALE

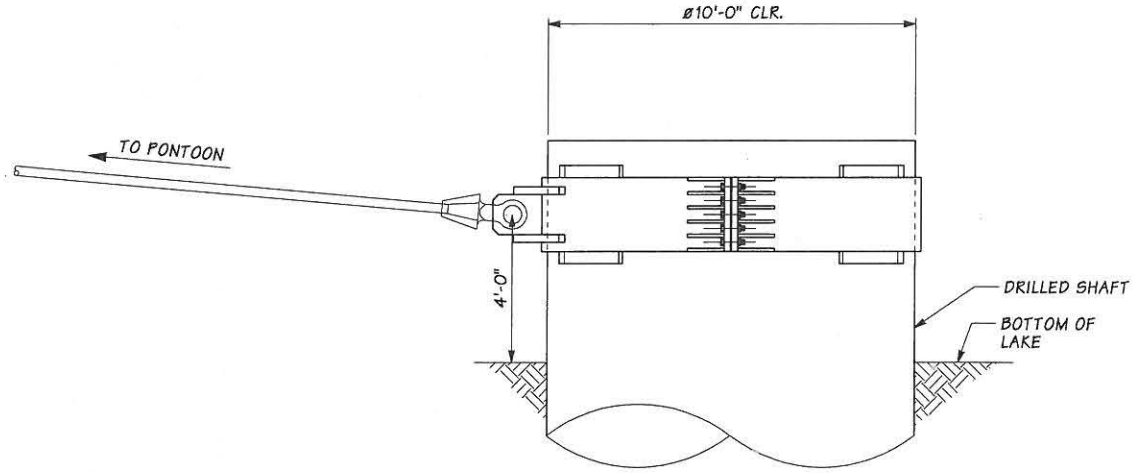

DRILLED SHAFT ANCHOR
NOT TO SCALE

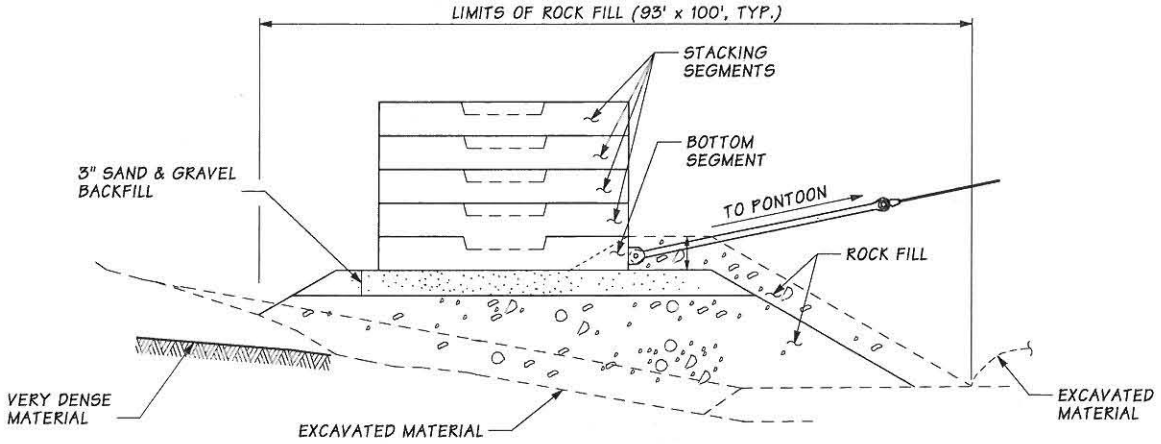

GRAVITY ANCHOR
NOT TO SCALE

SR520 – I-5 TO MEDINA **I-5 to Medina: Bridge Replacement and HOV Project** **Washington State Department of Transportation**	**PERMIT DRAWINGS** **PURPOSE:** To improve mobility for people and goods across Lake Washington within the SR 520 corridor in a manner that is safe, reliable, and cost-effective, while mitigating impacts on affected neighborhoods and the environment. **REFERENCE:** NWS-2008-1246 **APPLICANT: WSDOT**	**IN:** Wetlands, Streams, and Lake WA **AT:** Cities of Seattle and Medina **COUNTY:** King **STATE:** WA **DATE:** July 10, 2012	**HORIZONTAL DATUM:** NAD 83/91 **VERTICAL DATUM:** COE - 1919 **SHEET 14 OF 24**

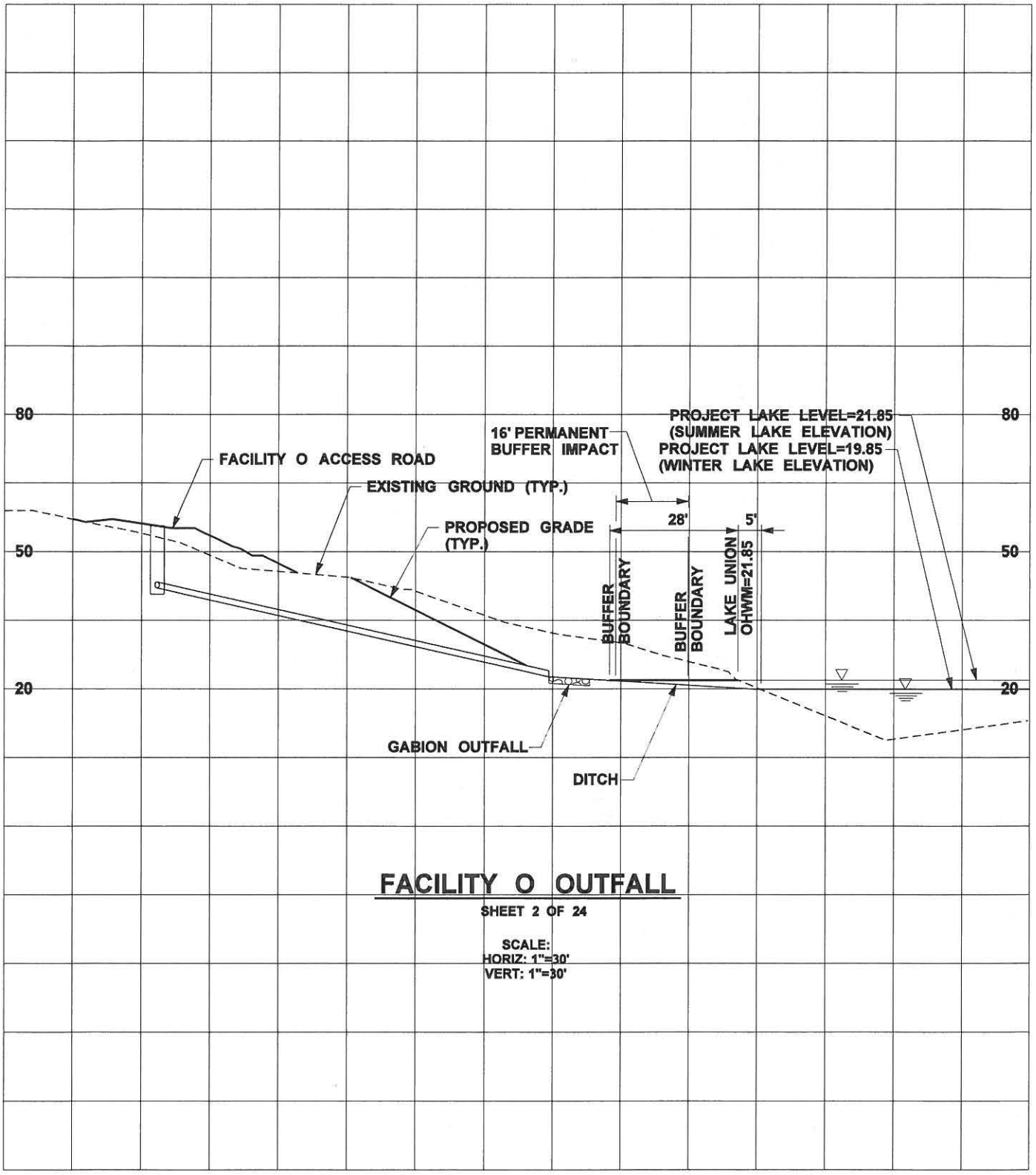

FACILITY O OUTFALL

SHEET 2 OF 24

SCALE:
HORIZ: 1"=30'
VERT: 1"=30'

SR520 – I-5 TO MEDINA I-5 to Medina: Bridge Replacement and HOV Project Washington State Department of Transportation	**PERMIT DRAWINGS** **PURPOSE:** To improve mobility for people and goods across Lake Washington within the SR 520 corridor in a manner that is safe, reliable, and cost-effective, while mitigating impacts on affected neighborhoods and the environment. **REFERENCE:** NWS-2008-1246 **APPLICANT:** WSDOT	**IN:** Wetlands, Streams, and Lake WA **AT:** Cities of Seattle and Medina **COUNTY:** King **STATE:** WA **DATE:** July 10, 2012	0 15 30 Feet **HORIZONTAL DATUM:** NAD 83/91 **VERTICAL DATUM:** COE - 1919 **SHEET 15 OF 24**

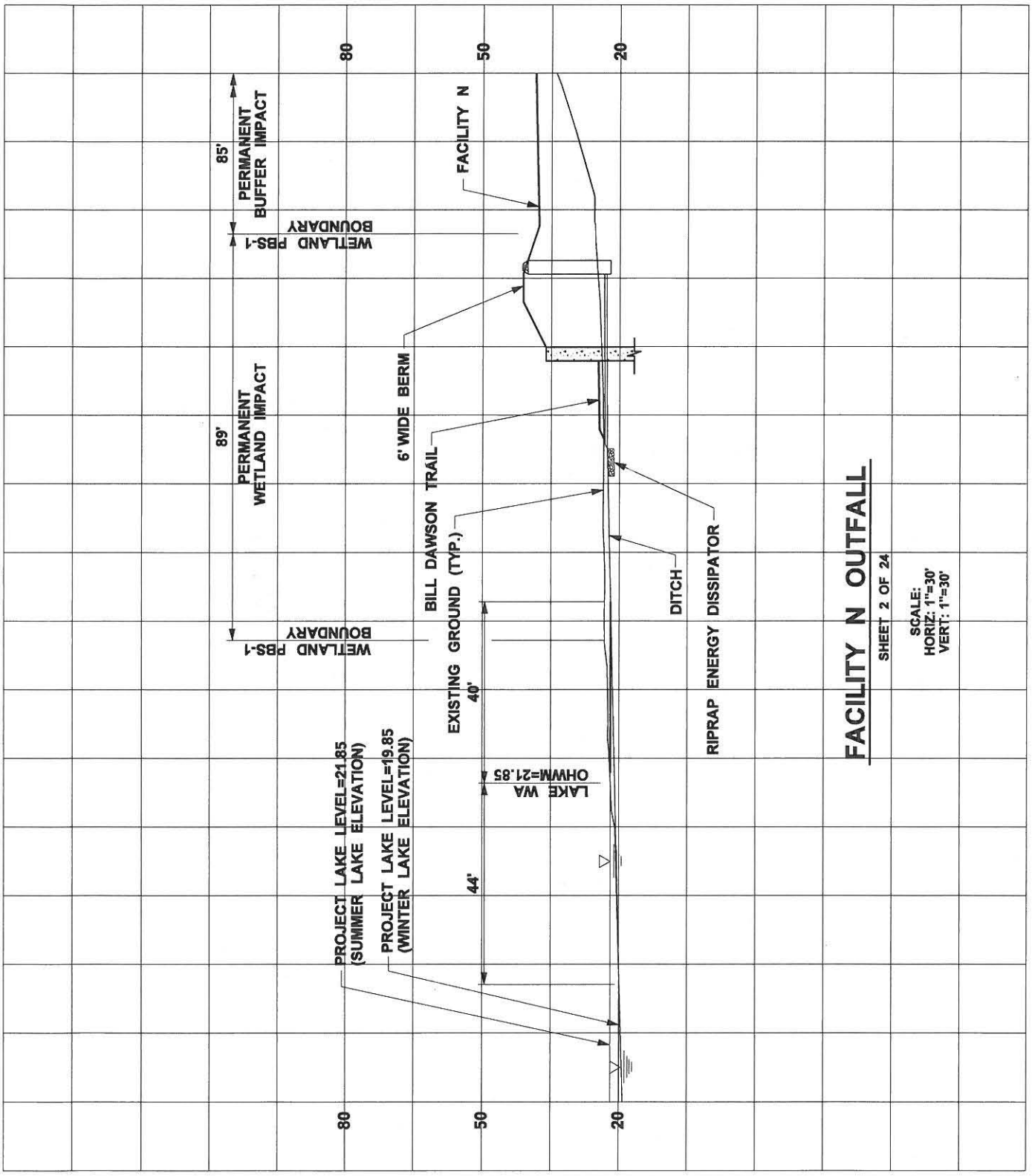

SR520 – I-5 TO MEDINA
I-5 to Medina: Bridge Replacement and HOV Project

Washington State Department of Transportation

PERMIT DRAWINGS

PURPOSE: To improve mobility for people and goods across Lake Washington within the SR 520 corridor in a manner that is safe, reliable, and cost-effective, while mitigating impacts on affected neighborhoods and the environment.

REFERENCE: NWS-2008-1246

APPLICANT: WSDOT

IN: Wetlands, Streams, and Lake WA

AT: Cities of Seattle and Medina

COUNTY: King **STATE:** WA

DATE: July 10, 2012

0 15 30 Feet

HORIZONTAL DATUM: NAD 83/91

VERTICAL DATUM: COE - 1919

SHEET 16 OF 24

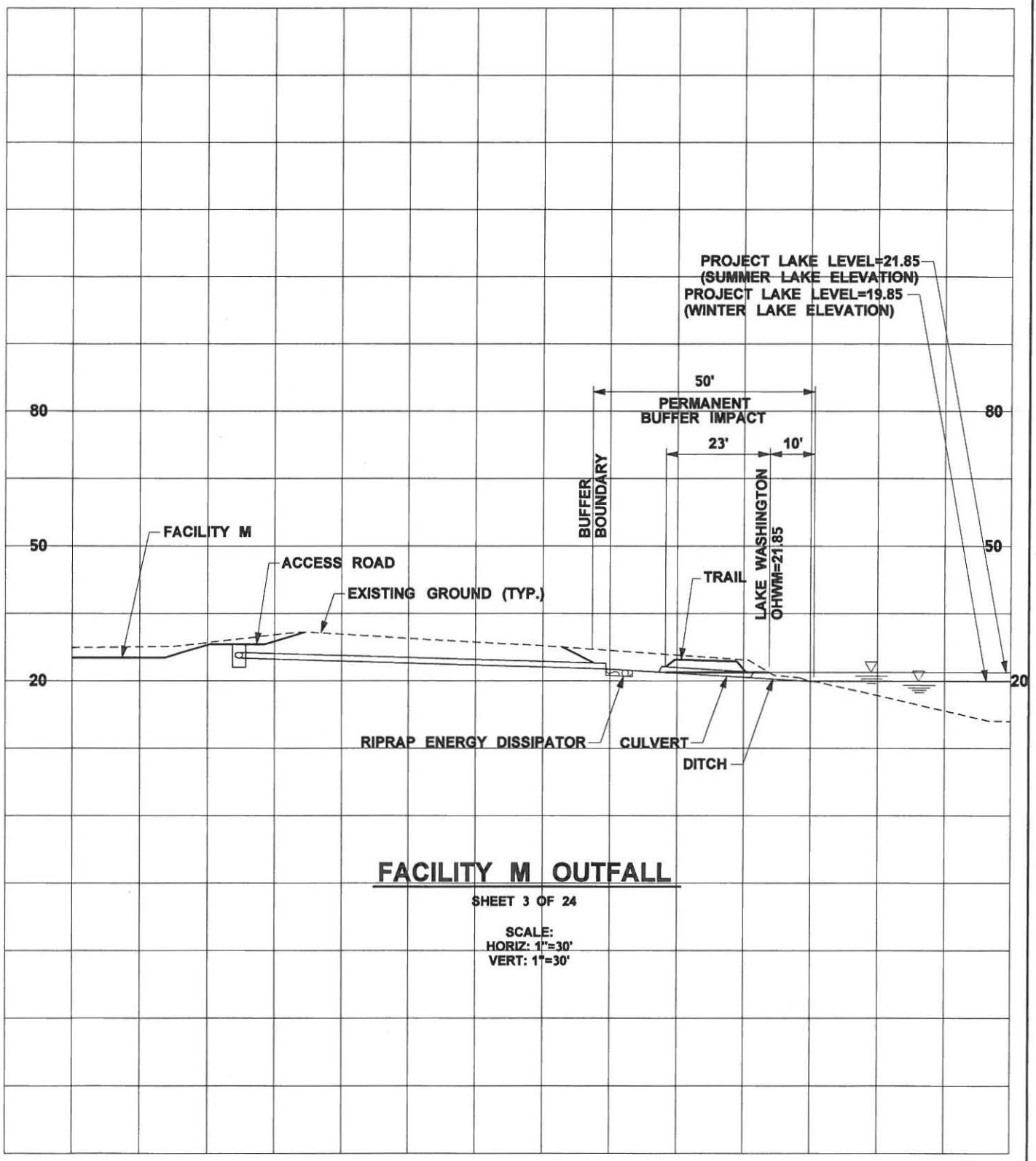

FACILITY M OUTFALL

SHEET 3 OF 24

SCALE:
HORIZ: 1"=30'
VERT: 1"=30'

SR520 – I-5 TO MEDINA I-5 to Medina: Bridge Replacement and HOV Project Washington State Department of Transportation	**PERMIT DRAWINGS** **PURPOSE:** To improve mobility for people and goods across Lake Washington within the SR 520 corridor in a manner that is safe, reliable, and cost-effective, while mitigating impacts on affected neighborhoods and the environment. **REFERENCE:** NWS-2008-1246 **APPLICANT:** WSDOT	**IN:** Wetlands, Streams, and Lake WA **AT:** Cities of Seattle and Medina **COUNTY:** King **STATE:** WA **DATE:** July 10, 2012	0 15 30 Feet **HORIZONTAL DATUM:** NAD 83/91 **VERTICAL DATUM:** COE - 1919 **SHEET 17 OF 24**

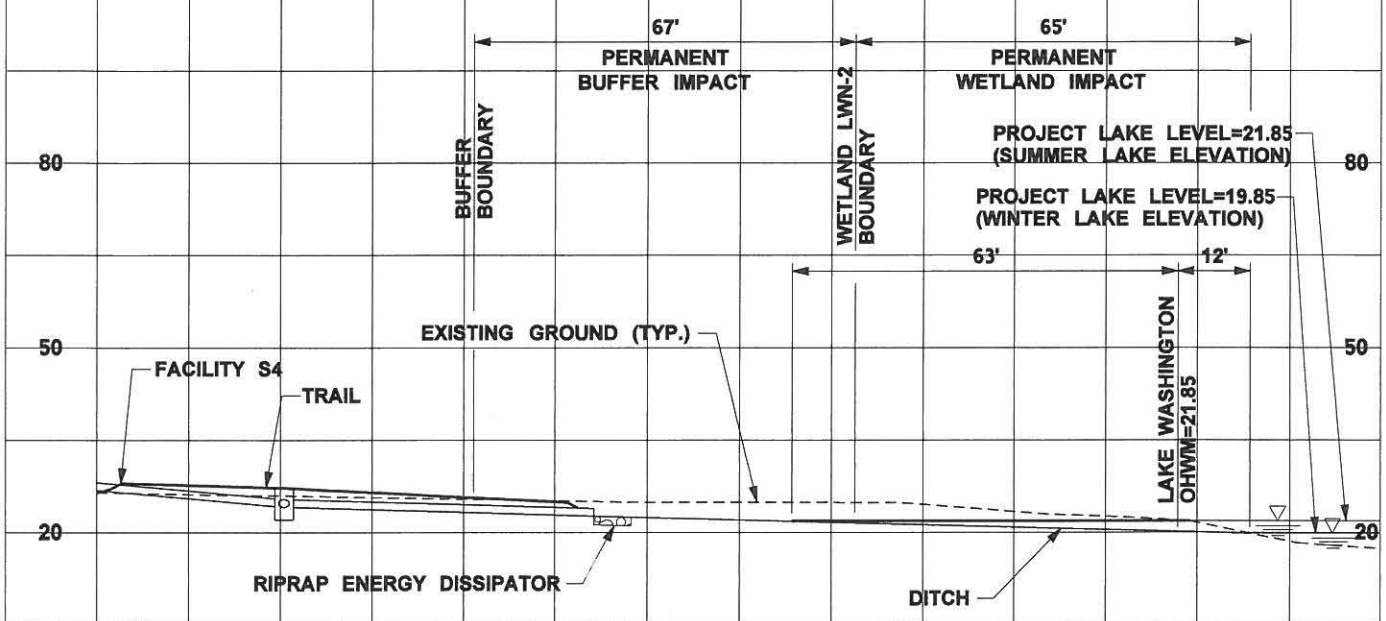

FACILITY S4 OUTFALL

SHEET 3 OF 24

SCALE:
HORIZ: 1"=30'
VERT: 1"=30'

SR520 – I-5 TO MEDINA I-5 to Medina: Bridge Replacement and HOV Project Washington State Department of Transportation	**PERMIT DRAWINGS** **PURPOSE:** To improve mobility for people and goods across Lake Washington within the SR 520 corridor in a manner that is safe, reliable, and cost-effective, while mitigating impacts on affected neighborhoods and the environment. **REFERENCE:** NWS-2008-1246 **APPLICANT:** WSDOT	**IN:** Wetlands, Streams, and Lake WA **AT:** Cities of Seattle and Medina **COUNTY:** King **STATE:** WA **DATE:** July 10, 2012	0 15 30 Feet **HORIZONTAL DATUM:** NAD 83/91 **VERTICAL DATUM:** COE - 1919 **SHEET 18 OF 24**

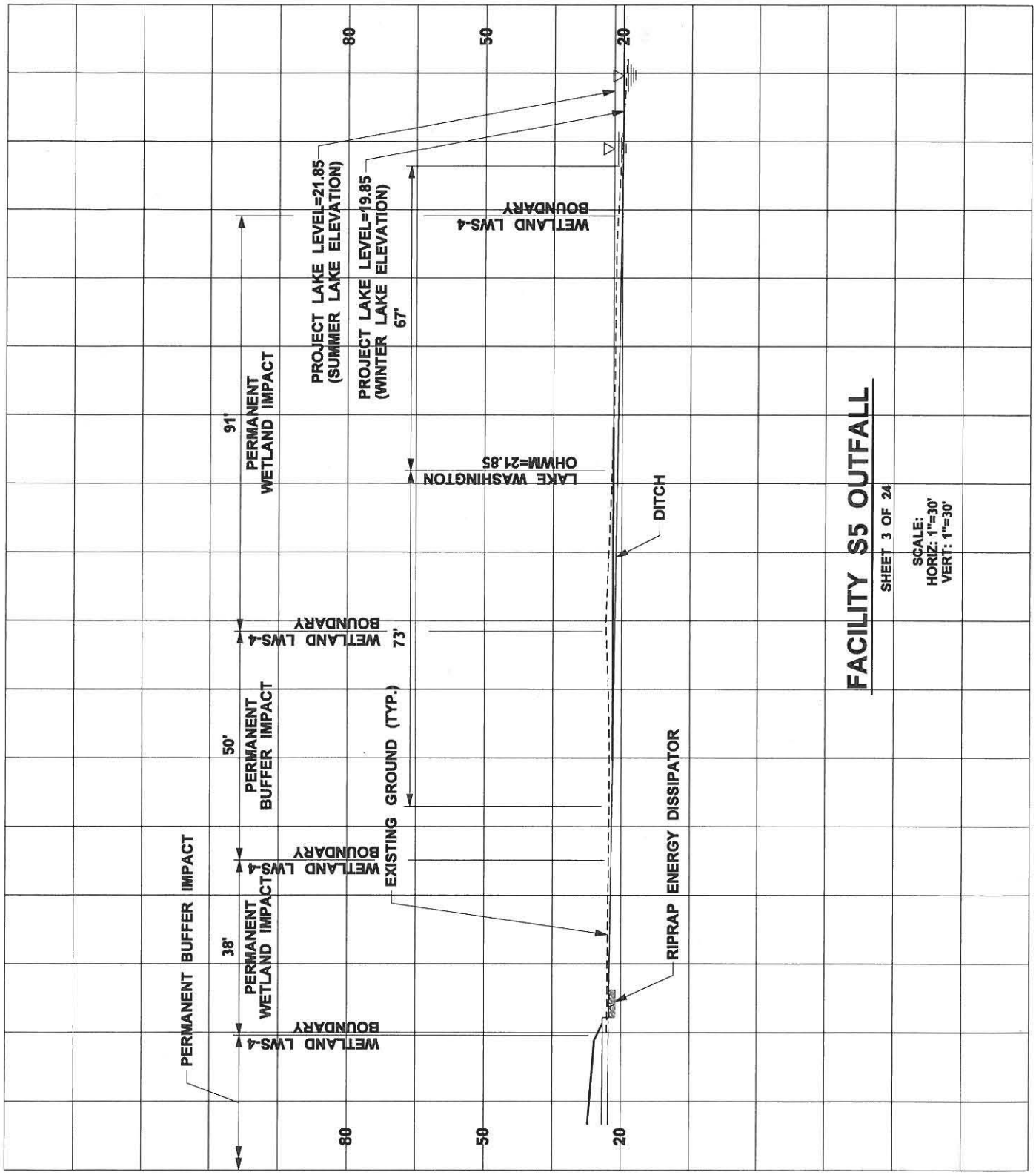

FACILITY S5 OUTFALL

SHEET 3 OF 24

SCALE:
HORIZ: 1"=30'
VERT: 1"=30'

SR520 – I-5 TO MEDINA I-5 to Medina: Bridge Replacement and HOV Project Washington State Department of Transportation	**PERMIT DRAWINGS** **PURPOSE:** To improve mobility for people and goods across Lake Washington within the SR 520 corridor in a manner that is safe, reliable, and cost-effective, while mitigating impacts on affected neighborhoods and the environment. **REFERENCE:** NWS-2008-1246 **APPLICANT:** WSDOT	**IN:** Wetlands, Streams, and Lake WA **AT:** Cities of Seattle and Medina **COUNTY:** King **STATE:** WA **DATE:** July 10, 2012	0 15 30 Feet **HORIZONTAL DATUM:** NAD 83/91 **VERTICAL DATUM:** COE - 1919 **SHEET 19 OF 24**

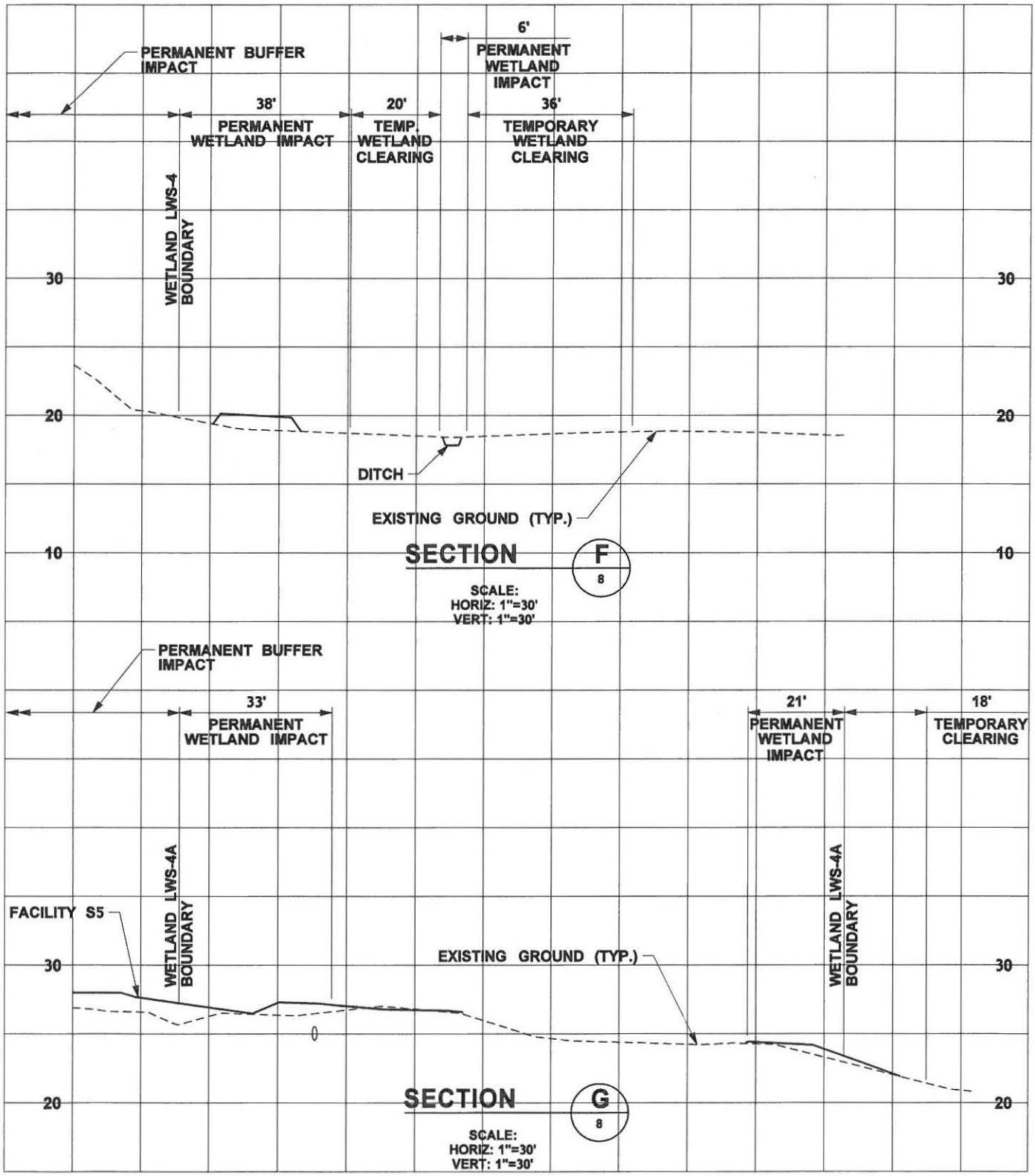

SR520 – I-5 TO MEDINA I-5 to Medina: Bridge Replacement and HOV Project Washington State Department of Transportation	**PERMIT DRAWINGS** **PURPOSE:** To improve mobility for people and goods across Lake Washington within the SR 520 corridor in a manner that is safe, reliable, and cost-effective, while mitigating impacts on affected neighborhoods and the environment. **REFERENCE:** NWS-2008-1246 **APPLICANT:** WSDOT	**IN:** Wetlands, Streams, and Lake WA **AT:** Cities of Seattle and Medina **COUNTY:** King **STATE:** WA **DATE:** July 10, 2012	0 15 30 Feet **HORIZONTAL DATUM:** NAD 83/91 **VERTICAL DATUM:** COE - 1919 **SHEET 20 OF 24**

SR520 – I-5 TO MEDINA
I-5 to Medina: Bridge Replacement and HOV Project

Washington State Department of Transportation

PERMIT DRAWINGS

PURPOSE: To improve mobility for people and goods across Lake Washington within the SR 520 corridor in a manner that is safe, reliable, and cost-effective, while mitigating impacts on affected neighborhoods and the environment.
REFERENCE: NWS-2008-1246
APPLICANT: WSDOT

IN: Wetlands, Streams, and Lake WA
AT: Cities of Seattle and Medina
COUNTY: King **STATE:** WA
DATE: July 10, 2012

0 15 30
Feet

HORIZONTAL DATUM: NAD 83/91
VERTICAL DATUM: COE - 1919
SHEET 21 OF 24

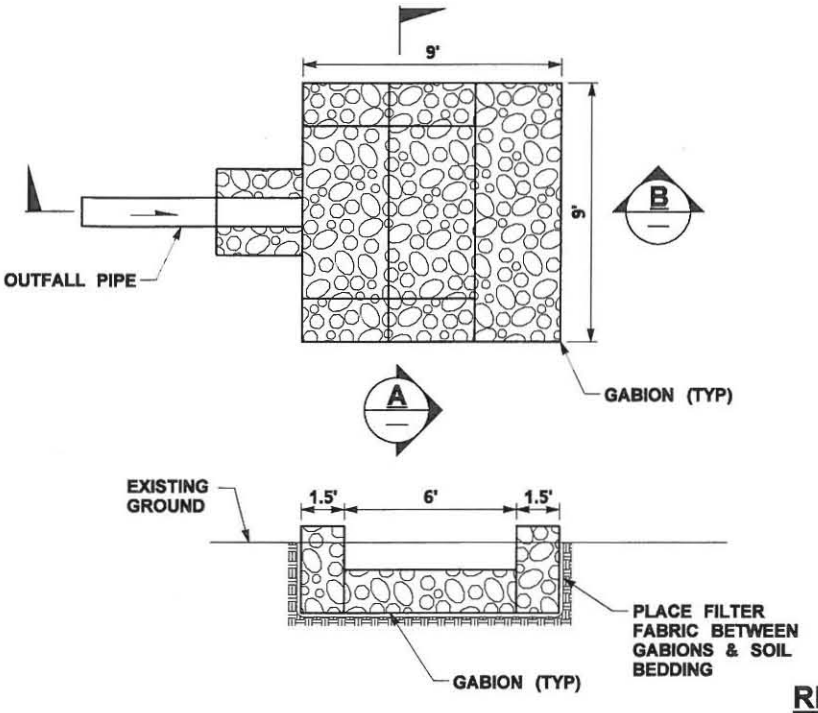

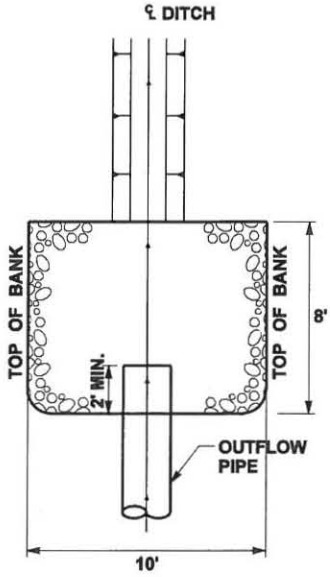

RIPRAP ENERGY DISSIPATOR DETAIL

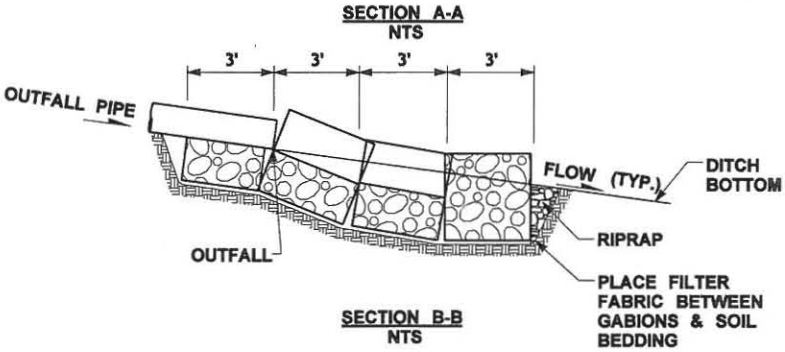

GABION PAD DETAIL

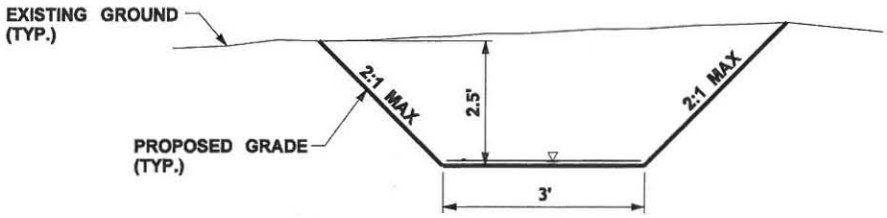

DITCH DETAIL

NTS

SR520 – I-5 TO MEDINA I-5 to Medina: Bridge Replacement and HOV Project Washington State Department of Transportation	**PERMIT DRAWINGS** **PURPOSE:** To improve mobility for people and goods across Lake Washington within the SR 520 corridor in a manner that is safe, reliable, and cost-effective, while mitigating impacts on affected neighborhoods and the environment. **REFERENCE:** NWS-2008-1246 **APPLICANT:** WSDOT	**IN:** Wetlands, Streams, and Lake WA **AT:** Cities of Seattle and Medina **COUNTY:** King **STATE:** WA **DATE:** July 10, 2012	**HORIZONTAL DATUM:** NAD 83/91 **VERTICAL DATUM:** COE - 1919 **SHEET 22 OF 24**

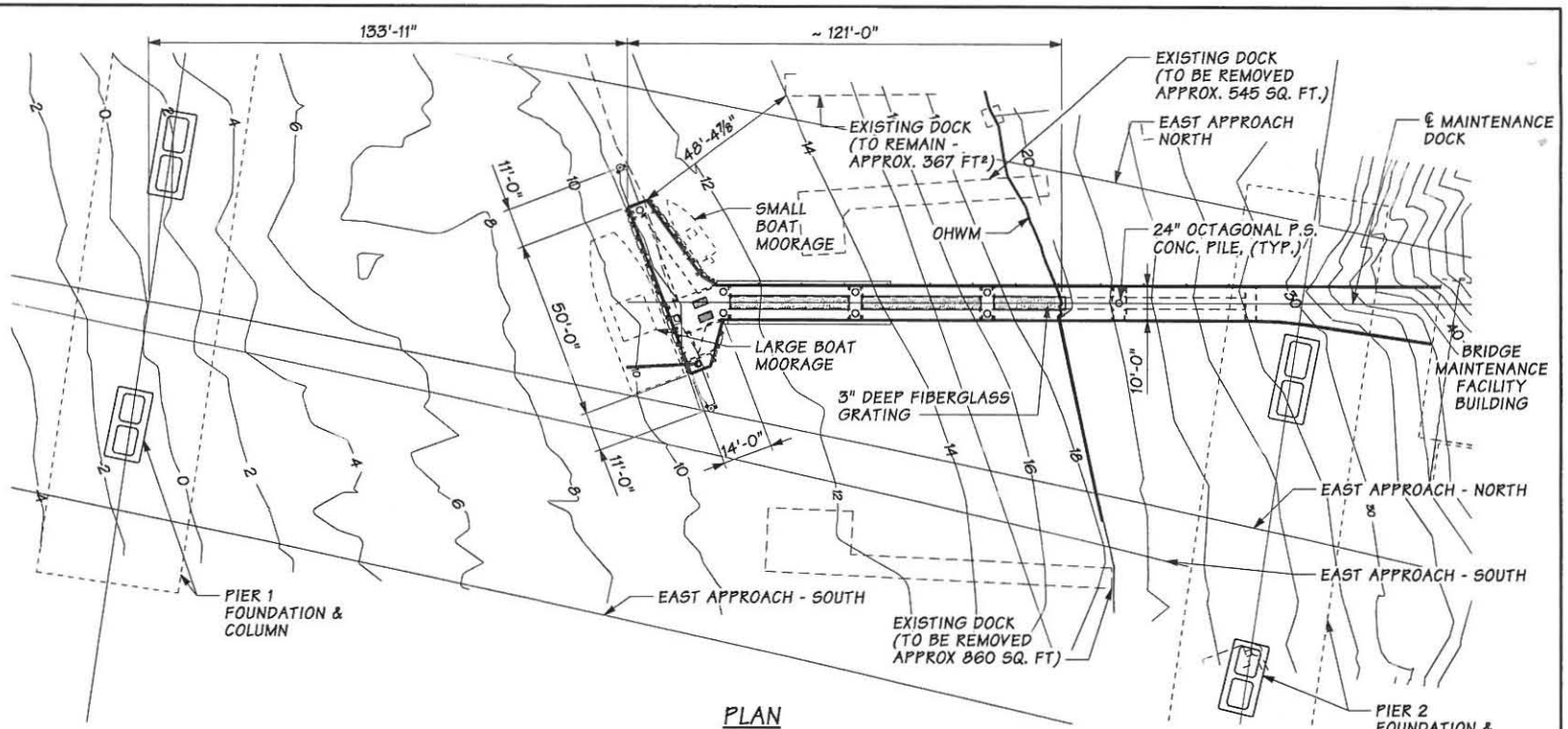

PLAN

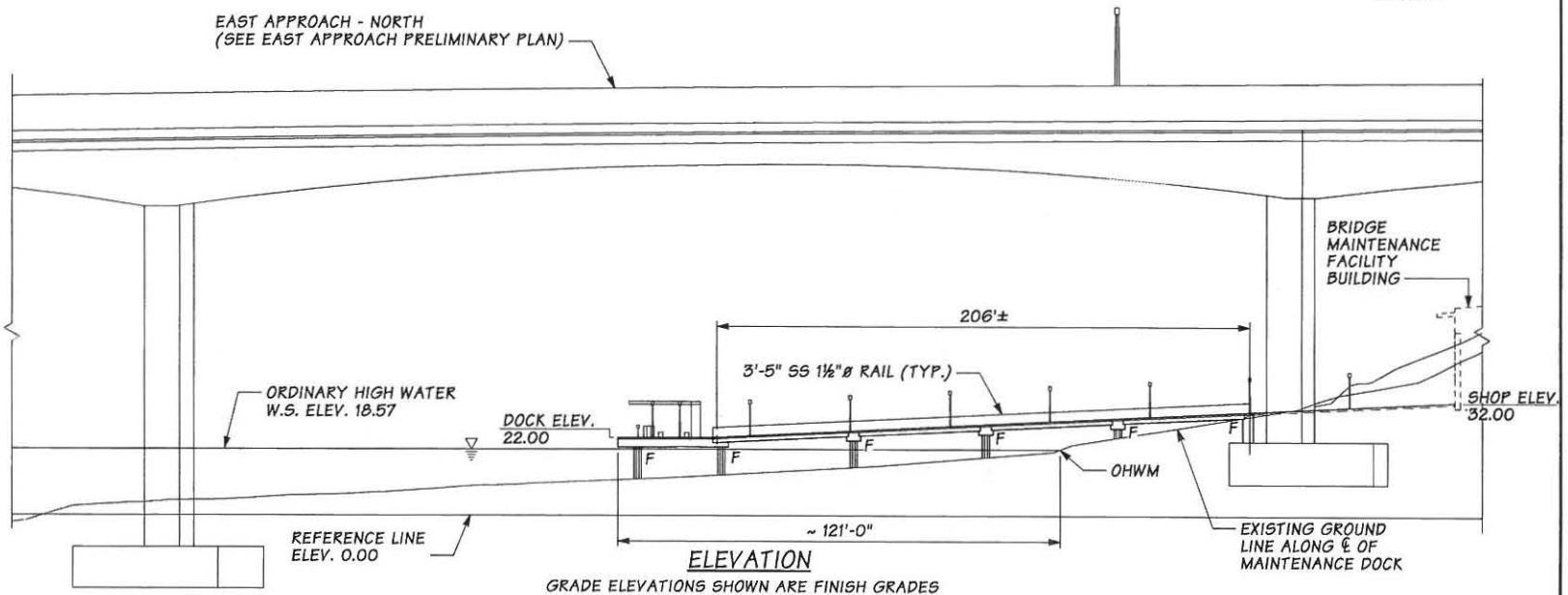

ELEVATION

GRADE ELEVATIONS SHOWN ARE FINISH GRADES AT TOP OF DECK ON MAINTENANCE DOCK CENTERLINE AND ARE EQUAL TO PROFILE GRADE.

SR520 – I-5 TO MEDINA
I-5 to Medina: Bridge Replacement and HOV Project

Washington State Department of Transportation

PERMIT DRAWINGS

PURPOSE: To improve mobility for people and goods across Lake Washington within the SR 520 corridor in a manner that is safe, reliable, and cost-effective, while mitigating impacts on affected neighborhoods and the environment.
REFERENCE: NWS-2008-1246
APPLICANT: WSDOT

IN: Wetlands, Streams, and Lake WA
AT: Cities of Seattle and Medina
COUNTY: King **STATE:** WA
DATE: July 10, 2012

HORIZONTAL DATUM: NAD 83/91
VERTICAL DATUM: COE - 1919

0 25 50 Feet

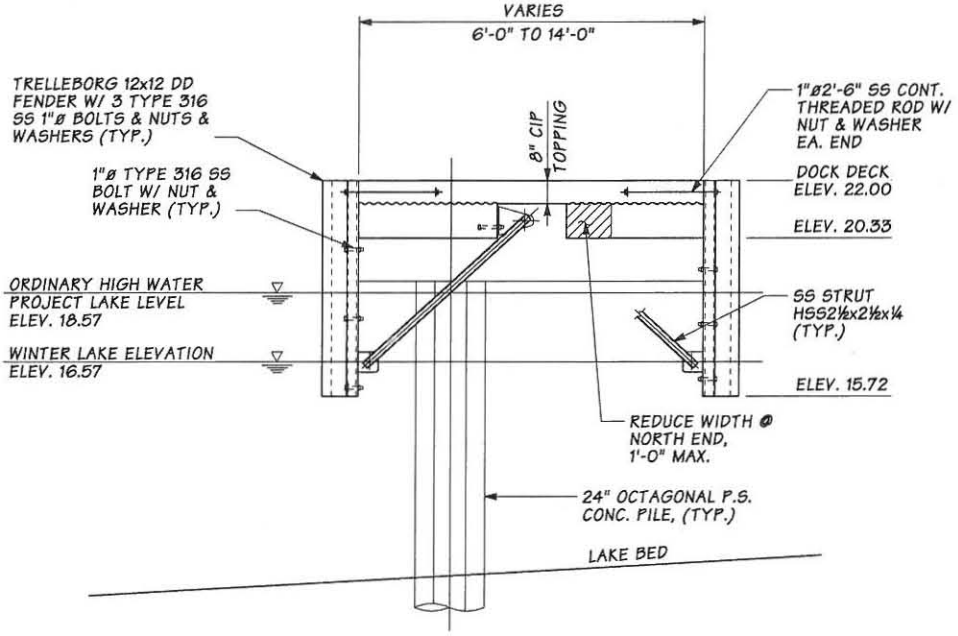

TYPICAL SECTION AT MOORAGE DOCK

NTS

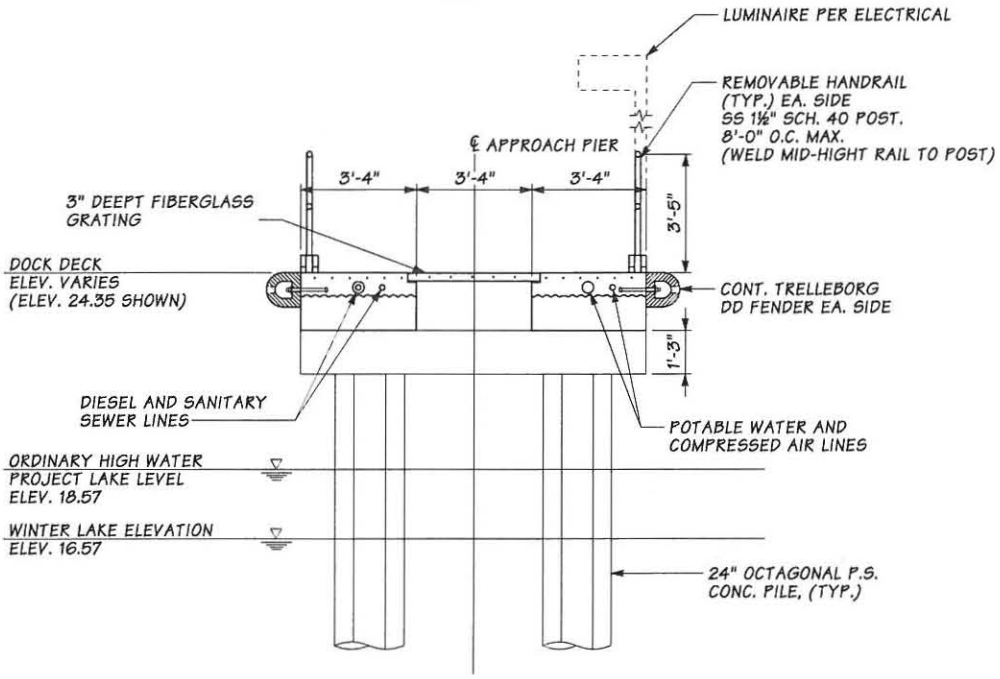

TYPICAL SECTION AT DOCK ALONG PIER CENTERLINE

NTS

SR520 – I-5 TO MEDINA **I-5 to Medina: Bridge Replacement and HOV Project** **Washington State Department of Transportation**	**PERMIT DRAWINGS** **PURPOSE:** To improve mobility for people and goods across Lake Washington within the SR 520 corridor in a manner that is safe, reliable, and cost-effective, while mitigating impacts on affected neighborhoods and the environment. **REFERENCE:** NWS-2008-1246 **APPLICANT: WSDOT**	**IN:** Wetlands, Streams, and Lake WA **AT:** Cities of Seattle and Medina **COUNTY:** King **STATE:** WA **DATE:** July 10, 2012	**HORIZONTAL DATUM:** NAD 83/91 **VERTICAL DATUM:** COE - 1919 **SHEET 24 OF 24**