Washington State Department of Transportation

SR 520 Bridge Replacement and HOV Program

STATE ROUTE 520

To: Lynn Peterson, Washington Transportation Secretary
From: Julie Meredith, SR 520 Program Director
CC: Cam Gilmour, WSDOT Chief Operating Officer
Keith Metcalf, WSDOT Chief Engineer
Jeff Carpenter, WSDOT State Construction Engineer
Date: July 30, 2013
Re: SR 520 Program and Change Order Update

Construction is underway to replace the vulnerable SR 520 floating bridge. Attached to this document are two change orders recently executed between WSDOT and contractors building new SR 520 bridge pontoons and the new SR 520 floating bridge. Below you will find additional context of overall SR 520 program costs and funding sources, as well as more detailed information about the change orders.

SR 520 costs and funding overview

The SR 520 Bridge Replacement and HOV Program is a major safety and reliability investment that began initial planning in 1997. Currently capped at a legislative budget of $4.65 billion, the SR 520 program will build a new six-lane corridor with transit/HOV lanes in each direction, replace the vulnerable fixed and floating bridges, and improve accessibility for transit riders and bicyclists.

In Oct. 2012, WSDOT announced a new programmatic cost estimate for the SR 520 program: $4.12 billion, or more than $500 million under than the legislative cap. This reduction was due in part to a good bidding environment on construction projects underway.

Of the $4.12 billion program, WSDOT currently has $2.7 billion in available funding. Funding sources include tolling revenues, a federal TIFIA loan, federal bridge funds and proceeds from the 2003 and 2005 Washington state gas taxes.

Work funded by the $2.7 billion includes:

- Floating Bridge and Landings Project (Contractor: Kiewit/General/Manson, A Joint Venture)
- Pontoon Construction Project (Contractor Kiewit-General Joint Venture)
- Eastside Transit and HOV Project (Contractor: Eastside Corridor Constructors)
- West Approach Bridge North Project (Contractor TBD)
- Completion of the environmental process
- Preliminary engineering for a portion of the west side
- Right of way

Pontoon and floating bridge change orders

The Pontoon Construction Project includes construction of 33 pontoons in Aberdeen built over six cycles. The first cycle (which included six pontoons) was completed in spring 2012. Spalling was encountered in one pontoon following post-tensioning; this pontoon was repaired and three more received pre-emptive modifications. It was determined that a design flaw led to more-than-expected cracking in the end walls that spread to keel slabs in these four pontoons. As the Engineer of Record, WSDOT is responsible for the design flaw.

Repairing these issues has led to delays in completing pontoons in Aberdeen and delivering pontoons to the Floating Bridge and Landings contractor.

To date, WSDOT has negotiated a total of three change orders to address the necessary repairs, modifications and time for these repairs: two with pontoon contractor Kiewit-General and one with floating bridge contractor Kiewit/General/Manson.

First change order (executed April 2013)

- To: Pontoon Construction Project
- For: Cycle 1 spalling repairs to four pontoons in the Aberdeen casting basin
    - De-tension one pontoon
    - Remove spalled concrete
    - Modify post-tensioning profile
    - Reinforce bolt beam
- Amount: $9.9 million
- Work complete

Second change order (executed July 2013)

- To: Floating Bridge and Landings Project
- For: Cycle 1 crack repairs to four pontoons
    - Leasing drydocks in Portland and Seattle and towing pontoons to the drydocks
    - Coffer cell construction and towing to Lake Washington
    - Repairs at each location (Epoxy injections, transverse post-tensioning, carbon-fiber wrap)
- Amount: $48.8 million
- Work underway

Third change order (executed July 2013)

- To: Pontoon Construction Project
- For: Cycle 2 modifications to four pontoons in the Aberdeen casting basin
    - Add transverse post-tensioning
    - New scope, materials, labor
- Amount: $22.4 million
- Work complete

Two additional change orders will be finalized later this year. The first one, between WSDOT and Kiewit-General, will include design changes for cycles 3-6 and adjust the schedule of pontoon delivery dates. The second one, between WSDOT and Kiewit/General/Manson, will adjust the floating bridge delivery date based on the new pontoon delivery dates.

SR 520 program contingency budget

Payment for the change orders comes from the program's risk reserve budget. In January 2013, WSDOT had approximately $200 million in risk reserve budget. Upon completion of these and other change orders paid within the program, our current reserve budget is $100 million. WSDOT is actively managing risks and continuing to work with its contractors to complete the funded construction program within our allocated budget.

SR 520 construction progress

As these change orders have been finalized, construction continues on the SR 520 corridor. Crews continue to build transit, HOV, and environmental improvements on the Eastside, while work continues on the third cycle of pontoons in Aberdeen. Pier construction is underway in Lake Washington, which will eventually bridge the connection from land to the floating bridge. In late July 2013, crews completed the third cycle of pontoons in the Tacoma casting basin. Currently, 32 out of 77 pontoons are complete for the new SR 520 floating bridge.

Attachments:

- Contract 8066 - Floating Bridge and Landings
  Change Order #108

- Contract 7826 – Pontoon Construction Project
  Change Order #101

Washington State Department of Transportation

Memorandum

July 24, 2013

TO: Mark Gaines
MS 47354

THRU: Julie Meredith/Tom Horkan
NB 82-99

FROM: Dave Becher
(425) 576-7045

SUBJECT: Contract 008066
SR 520, Floating Bridge and Landings Project
Federal Aid No. BR-0520(047)
Change Order No. 108 – PFS Cycle 1 Repair

Attached for Headquarters Construction execution and further processing is Project Engineer recommended Change Order No. 108 – PFS Cycle 1 Repair.

Description of the Change:
This is an Owner Initiated Change (OIC). This OIC allows WSDOT to correct a deficiency in the design for four (Three Type 1 Longitudinal and One Type 3A Cross) pontoons constructed during Cycle 1 at the Aberdeen casting basin as part of the Pontoon Construction Project. These four pontoons are "Pontoons Furnished by the State" (PFS) provided to the Design-Builder (KGM) on the Floating Bridge and Landings Project.

Cracks in the pontoon end walls which extended into the keel slab beneath the pontoons were discovered in the four Cycle 1 PFS provided to KGM in 2012. WSDOT determined that these cracks needed to be repaired and sealed to ensure the 75 year design life for the new structure. The repair plan developed and included in this change order meets the expectation for a 75 year design life.

This OIC provides a pontoon repair design to be implemented by KGM which is briefly summarized below:

1. Epoxy injection of keel and end wall cracks with widths greater than .006"
2. Installation of externally bonded Carbon Fiber Reinforced Plastic (CFRP) on the pontoon keel slabs as well as the end wall of Pontoon W
3. Repair of spall areas due to the design deficiency on the keel slabs
4. External transverse post-tensioning of the pontoon end walls

The details of the repair design are described in much greater detail in the attached change order and supporting documents.

This design deficiency has been corrected for future cycles of PFS being constructed in the Aberdeen casting basin. Cycle 2 PFS were modified in the casting basin prior to float out. This repair design will be incorporated into the revised design for construction of Cycles 3-6 PFS to avoid field modifications in the casting basin or on Lake Washington.

Evolution of the Change:

After the float out of the Cycle 1 PFS in July 2012, WSDOT inspections determined that there were some cracks which were greater than .006" (defined as structural cracks) in the end walls of the larger Type 1 Longitudinal and Type 3A Cross pontoons. The Pontoon Construction Project repaired the majority of these cracks with epoxy injection. While WSDOT inspections did detect dampness along the end walls and keel slab (inside the pontoons) which could be indicative of cracking, the pontoons were also routinely damp from rain water as well as cure water, so the evidence of leaking cracks was inconclusive.

Detailed inspections of the underside of the keel slab could not be performed in the Aberdeen casting facility, and water visibility issues in the Grays Harbor area prevented high visibility dive inspection of these pontoons after float out. The pontoons were transferred from the Pontoon Construction Project to KGM in early August 2012, and these pontoons were towed to Lake Washington (except for Pontoon T which was towed to EB-1 in Tacoma).

When the pontoons arrived on Lake Washington, KGM and WSDOT performed additional inspection of the pontoons. Cracking was identified in several of the PFS, particularly Pontoon W, and damp cells were noted. These locations were noted for additional observation and potential repair.

During initial pontoon ballasting operations and preparatory operations for pontoon joining, KGM and WSDOT staff noted additional internal pontoon wall cracking and leaking between ballasted cells (these were not exterior walls – adjacent to the Lake). WSDOT determined that the internal cracking was not significant; however, crack mapping also identified damp spots along the keel slabs and end walls of the Cycle 1 pontoons.

The Project Office staff worked with the 520 Program Office along with Headquarters Construction to discuss options for investigating this issue and potentially repairing these cracks.

WSDOT Project staff also worked closely with KGM during these initial months to identify the cracks and potential options to repair the cracks. It became clear that more information was needed regarding the extent of the cracking on the pontoon end walls below the waterline and on the bottom of the keel slab. To gather this type of data, it was determined that a detailed and extensive dive inspection was required. WSDOT

requested that KGM schedule divers to perform this inspection. WSDOT also requested KGM to start developing design/repair options to address this cracking.

Over the next seven months, extensive discussions and numerous meetings were held between WSDOT and KGM representatives to develop plans and procedures for analyzing and repairing these cracks. Key dates and letters sent to KGM are identified in this narrative.

On November 1, 2012 (WSDOT Serial Letter 0185), WSDOT formally requested that KGM perform additional pontoon inspections for Pontoons V and W to verify the condition of the pontoons and the extent of potential cracking. These inspections included the following:

1. Underwater dive inspection and dive video of the keel slab and submerged sections of the exterior walls for Pontoons V and W
2. Interior and Exterior crack mapping for Pontoons V and W
3. Inspection of existing crack repairs

In addition, WSDOT requested that KGM develop a crack repair plan to address external cracking of the keel slab and exterior end walls on the PFS as follows:

1. Repair options, including material types and construction requirements
2. Recommendations on timing of repairs
3. Expected service life of repair options

KGM engaged the services of Gerwick and Associates, a consulting engineering firm which specializes in repair to marine concrete structures, to develop this crack repair plan. The costs associated with the dive inspections, the crack mapping, inspection of existing crack repairs and development by Gerwick and Associates of a crack repair plan were covered under Change Order 58.

On January 4, 2013 (WSDOT Serial Letter 0237), WSDOT formally notified KGM that Pontoon V to W joining operations could not proceed until crack repairs were completed. WSDOT requested KGM to begin developing plans and procedures for performing the crack repair operations which were likely to include epoxy crack injection, installation of carbon fiber reinforced plastic (CFRP), and an external post-tensioning system.

On February 15, 2013 (WSDOT Serial Letter 0261), WSDOT officially transmitted the Cycle 1 PFS external post-tensioning plans for the Type 1 Longitudinal pontoons. In this letter, WSDOT requested that KGM begin procurement of materials and planning operations for this external post-tensioning work.

On March 13, 2013 (WSDOT Serial Letter 0300), WSDOT officially transmitted the Cycle 1 PFS external post-tensioning plans for the Type 3A Cross pontoon. In this letter,

WSDOT requested KGM begin procurement of materials and planning operations for this post-tensioning work.

On March 21, 2013 (WSDOT Serial Letter 0323), WSDOT provided clarifications to details associated with the post-tensioning repair plans. These clarifications took advantage of lessons learned from the Cycle 2 PFS post-tensioning repairs completed by Kiewit-General in Aberdeen for the Pontoon Construction Project.

On April 15, 2013 (WSDOT Serial Letter 0351), WSDOT notified KGM that the loading forces for the large coffercell design developed by Gerwick and Associates did not present a capacity problem for the pontoons. WSDOT recommended that KGM proceed with development of the final large coffercell plans and shop drawings for fabrication and construction.

On April 17, 2013 (WSDOT Serial Letter 0357), WSDOT responded to KGM Serial Letter 0373 which requested approval to proceed with material procurement for the large coffercell. WSDOT provided limited approval to proceed with material procurement associated with this coffercell. WSDOT also requested that KGM provide cost information related to dry-docking options for Pontoons T and W.

On May 9, 2013 (WSDOT Serial Letter 0384), WSDOT provided direction to KGM to reserve dry-dock space at Vigor facilities in both Portland, Oregon and Seattle, Washington. The cost of this reservation was a non-refundable amount of $600,000, which would be applied to the lease payment if these dry-docks were actually utilized. WSDOT indicated that KGM would be compensated by separate change order (Change Order 97) for this $600,000 expense.

On May 22, 2013 (WSDOT Serial Letter 0395), WSDOT provided clarification that KGM would only need to fabricate one large coffercell to complete the repairs for the Cycle 1 PFS. In addition, this letter authorized KGM to begin procurement of all material and equipment needed to fabricate this coffercell at Jesse Engineering in Tacoma, Washington.

On June 4, 2013 (WSDOT Serial Letter 0408), WSDOT responded to KGM Serial Letter 0411 with written direction to proceed with fabrication of the coffercell at Jesse Engineering in Tacoma.

On June 6, 2013 (WSDOT Serial Letter 0412), WSDOT requested that KGM submit their final estimate for the repair work in a specific format, breaking the work into the following work elements:

1. Cost of dry-dock facilities in Portland and Seattle
2. Complete cost of coffercell fabrication and coffercell transport/tipping barge
3. Tow operations, including tow gear installation and removal

4. Gerwick and other outside consultant engineering support

In addition, for each of the pontoons, a detailed cost estimate for the following work activities was requested:

1. Post tensioning repair
2. Epoxy injection, spall repair, and CFRP installation

KGM provided a detailed breakdown of the repair costs to WSDOT. Shortly thereafter, WSDOT and KGM began extensive discussions to review and negotiate the cost of this added work. We have attached as part of this change order package a copy of the summary of negotiations which provides additional details on the negotiation process.

During the development of this change order, extensive and on-going coordination and discussions were also held with the Pontoon Construction Project Team, Headquarters Construction, the Bridge and Structures Office, and the SR 520 Program Office. These discussions included technical discussions concerning the repair options and available options as well as the cost of the repairs.

As the dollar value of this change order exceeds the approval authority of the Project Office, the following approvals were secured:

Approvals Provided:

- Project Level – Dave Becher on July 7, 2013
- Region/Program Level – Tom Horkan on July 8, 2013
- Region/Program Funding Concurrence – Alan Chan on July 15, 2013
- Headquarters Construction Level – Mark Gaines on July 16, 2013
- FHWA Level – Anthony Sarhan on July 16, 2013

Entitlement:
This is an OIC which results in new work being assigned to the Design-Builder. As a result, the Design-Builder is entitled to additional compensation to perform the added work.

Price:
WSDOT and KGM negotiated a change order which increases the contract amount by $48,760,327.00 to add this work to the contract. WSDOT elected to utilize a single large lump price to cover the majority of the work. It was our strategy to transfer risk for this repair work to KGM by forward pricing this work. Attached to this change order package are copies of the summary of negotiations, the Engineer's Estimate, and a report prepared by Stanton Constructability Services which discusses KGM's price proposal.

DBE Goal Impacts:
This change order significantly increases the contract value, but it does not alter the DBE goals (does not decrease the DBE percentage) for this contract. A significant portion of

the work added by this change order is associated with heavy marine work which is difficult to subcontract out to DBEs. In addition, large portions of this work are associated with Vigor's lease (over $6 million) and Jesse Engineering's fabrication of the large coffercell (over $12 million) where opportunities to subcontract to DBEs are either non-existent or very minimal.

KGM has been notified by WSDOT Serial Letter 0442 that the DBE goals for this contract remain at 7% and will be calculated from the adjusted contract price, which includes the cost of this change order work. KGM has placed WSDOT on notice (KGM Serial Letter 0434) that there could be added costs associated with this requirement.

This is a potential cost issue which will be addressed, if necessary, by a separate change order.

Contract Time:
The Design-Builder has committed in this change order to completing the crack repair operations by June 20, 2014. Any delays to the critical path attributable to not completing the crack repair by this date, which aren't the responsibility of WSDOT, will be the responsibility of the Design-Builder.

However, due to the complexities of this added work and potential impacts to the critical path schedule, the question of contract time requires further information and analysis prior to determination of schedule impacts. This schedule analysis will also be dependent on future Cycle 3-6 PFS dates which are currently being negotiated on the Pontoon Construction Project. As a result, this change order does not address contract time. Contract time impacts and adjustments will be deferred, and addressed as necessary under a separate change order.

Memorandum Attachments:

- Change Order 108
- Change Order Checklist
- Final Negotiations Summary
- Stanton Constructability June 15, 2013 Memo
- SR 520 Pontoon Repair – Cycle 1 Pontoons from Pontoon Construction Project – June 3, 2013 Memo
- Engineer's Estimate
- KGM's Final Cost Proposal
- KGM Serial Letters 0373, 0400, 0411, and 0434
- WSDOT Serial Letters 0185, 0237, 0261, 0300, 0323, 0351, 0357, 0384, 0395, 0408, 0412, and 0442
- Change Orders 58 and 97
- Approval Documentation

DPB: DB
Attachments
PW File: 17.02.CO-108

WASHINGTON STATE
DEPARTMENT OF TRANSPORTATION
CHANGE ORDER

CONTRACT NO: 008066 **FEDERAL AID NO:** BR-0520(047)
CONTRACT TITLE: SR 520 / I-5 TO MEDINA - EVERGREEN POINT FLOATING
CHANGE ORDER NO: 108 PFS CYCLE 1 REPAIR

PRIME CONTRACTOR: SW0106139 KIEWIT/GENERAL/MANSON, A JOINT
33455 6TH AVE S

FEDERAL WAY WA 98003-6335

(X) Ordered by Engineer under the terms of Section 1-04.4 of the Standard Specifications

( ) Change proposed by Contractor

ENDORSED BY:	SURETY CONSENT:
CONTRACTOR	ATTORNEY IN FACT
DATE	DATE

ORIGINAL CONTRACT AMOUNT:	586,561,000.00
CURRENT CONTRACT AMOUNT:	613,459,625.00
ESTIMATED NET CHANGE THIS ORDER:	48,760,327.00
ESTIMATED CONTRACT TOTAL AFTER CHANGE:	662,219,952.00

Approval Required: ( ) Region (✓) Olympia Service Center ( ) Local Agency

(✓) APPROVAL RECOMMENDED ( ) EXECUTED	EXECUTED:
~~PROJECT ENGINEER~~ Engineering Manager	STATE CONSTRUCTION ENGINEER
July 25, 2013	7/26/13
DATE	DATE
(✓) APPROVAL RECOMMENDED ( ) EXECUTED	OTHER APPROVAL WHEN REQUIRED
REGIONAL ADMIN. BY:	Anthony Sarhan 7/26/13
7/25/13	SIGNATURE DATE
DATE	FHWA
	REPRESENTING

WASHINGTON STATE
DEPARTMENT OF TRANSPORTATION
CHANGE ORDER

DATE: 07/22/13

CONTRACT NO: 008066 FEDERAL AID NO: BR-0520(047)
CONTRACT TITLE: SR 520 / I-5 TO MEDINA - EVERGREEN POINT FLOATING
CHANGE ORDER NO: 108 PFS CYCLE 1 REPAIR

PRIME CONTRACTOR: SW0106139 KIEWIT/GENERAL/MANSON, A JOINT
33455 6TH AVE S
FEDERAL WAY WA 98003-6335

(X) Ordered by Engineer under the terms of Section 1-04.4 of the Standard Specifications

( ) Change proposed by Contractor

ENDORSED BY:	SURETY CONSENT:
CONTRACTOR	ATTORNEY IN FACT
7/23/2013 DATE	DATE

ORIGINAL CONTRACT AMOUNT:	586,561,000.00
CURRENT CONTRACT AMOUNT:	613,459,625.00
ESTIMATED NET CHANGE THIS ORDER:	48,760,327.00
ESTIMATED CONTRACT TOTAL AFTER CHANGE:	662,219,952.00

Approval Required: ( ) Region (✓) Olympia Service Center ( ) Local Agency

( ) APPROVAL RECOMMENDED ( ) EXECUTED PROJECT ENGINEER DATE	EXECUTED: STATE CONSTRUCTION ENGINEER DATE
( ) APPROVAL RECOMMENDED ( ) EXECUTED REGIONAL ADMIN: BY: DATE	OTHER APPROVAL WHEN REQUIRED SIGNATURE DATE REPRESENTING

CG02v04 (revised Feb 2005)

Bond No.'s
Travelers: 105636215
Safeco: 023018256

WASHINGTON STATE DEPARTMENT OF TRANSPORTATION CHANGE ORDER

DATE: 07/22/13

CONTRACT NO: 008066 FEDERAL AID NO: BR-0520(047)
CONTRACT TITLE: SR 520 / I-5 TO MEDINA - EVERGREEN POINT FLOATING
CHANGE ORDER NO: 108 PFS CYCLE 1 REPAIR

PRIME CONTRACTOR: SW0106139 KIEWIT/GENERAL/MANSON, A JOINT
33455 6TH AVE S
FEDERAL WAY WA 98003-6335

(X) Ordered by Engineer under the terms of Section 1-04.4 of the Standard Specifications

( ) Change proposed by Contractor

ENDORSED BY: Kiewit/General/Manson, A Joint Venture CONTRACTOR DATE	SURETY CONSENT: Co-Surety: Travelers Casualty and Surety Company of America Co-Surety: Safeco Insurance Company of America ATTORNEY IN FACT Anne E. Strieby 7/23/2013 DATE

ORIGINAL CONTRACT AMOUNT:	586,561,000.00
CURRENT CONTRACT AMOUNT:	613,459,625.00
ESTIMATED NET CHANGE THIS ORDER:	48,760,327.00
ESTIMATED CONTRACT TOTAL AFTER CHANGE:	662,219,952.00

Approval Required: ( ) Region ( ) Olympia Service Center ( ) Local Agency

( ) APPROVAL RECOMMENDED ( ) EXECUTED PROJECT ENGINEER DATE	EXECUTED: STATE CONSTRUCTION ENGINEER DATE
( ) APPROVAL RECOMMENDED ( ) EXECUTED REGIONAL ADMIN: BY: DATE	OTHER APPROVAL WHEN REQUIRED SIGNATURE DATE REPRESENTING

CG02v04 (revised Feb 2005)

WASHINGTON STATE
DEPARTMENT OF TRANSPORTATION
CHANGE ORDER

CONTRACT NO: 008066	CHANGE ORDER NO: 108

All work, materials, and measurements to be in accordance with the provisions of the Standard Specifications and Special Provisions for the type of construction involved.

This contract is revised as follows:

The first paragraph above is revised to read:

All work, materials, and measurements to be in accordance with the request for proposal (RFP) and the contract documents for this project.

Description:
This is a WSDOT-Initiated Change in accordance with General Provisions Section 1-04.4(1). This change order addresses the addition of Work to repair cycle 1 Pontoons Furnished by the State (PFS), Pontoons T, U, V and W, to achieve the required Design Life of 75 years.

Construction Requirements:
The Design-Builder shall tow Pontoon T to the Vigor Industrial dry docking facility shipyard in Portland, OR and Pontoon W to Vigor's shipyard in Seattle, WA. The dry docking facilities shall be utilized to perform repairs to Pontoons T and W, and other Work as specified in this change order. Pontoons T and W shall be towed back to Lake Washington upon completion of the Work.

The Design-Builder is responsible for determining, with WSDOT's concurrence, whether the transport of Pontoon W through the Montlake Cut requires the removal of the structural elements constructed above the Pontoon deck. If the removal of the structural elements is determined to be necessary, the elements shall be removed in order to provide the appropriate buoyancy for Pontoon W to pass undamaged through the Montlake Cut, and shall be reconstructed once Pontoon W is returned to Lake Washington.

The Pontoons in the dry docking facilities shall be supported by blocking. The blocking for Pontoons T and W shall be performed in accordance with the following approved blocking layouts developed under a separate change order:

* Pontoon T Blocking Layout
  Change Order pages 9 through 11
* Pontoon W Blocking Layout
  Change Order pages 12 through 13

If adjustment of the blocking is deemed necessary by WSDOT to complete repairs, removal and replacement of the blocking shall be performed as directed.

Damage to Pontoons T or W that is directly attributable to the approved blocking layouts or is considered related to the performance of the Work under the PCP Contract will be the responsibility of WSDOT with respect to this Contract, and will be addressed under a separate change order in accordance with Section 1-04.4 of the General Provisions.

CONTRACT NO: 008066 CHANGE ORDER NO: 108

The Design-Builder shall fabricate a coffer cell in accordance with the Gerwick design provided on pages 14 through 45 of this change order, which has been developed under a separate change order for a Type 1 longitudinal Pontoon incorporating a 5-year storm event rating as directed by WSDOT. The coffer cell shall be transported to Lake Washington to perform repairs and other Work on Pontoons U and V as specified in this change order. Upon completion of the Work for Pontoons U and V, the coffer cell shall be removed from the Project, and shall remain the property of the Design-Builder.

The repairs and other Work to be performed on Pontoons T, U, V and W shall be as follows:

Pontoon T:

* The Design-Builder shall perform keel slab, top deck, and exterior wall crack inspection and mapping limited to the dimensions of the set of exterior Pontoon cells parallel to each end wall as shown on page 46 of this change order. The inspection shall be in accordance with Technical Requirements Section 2.12.5.10.10.

Pontoons T, U and V:

* Transverse post-tensioning retrofit shall be performed as outlined on the plan set entitled "SR 520 Floating Bridge and Landings Project Bolt Beam Retrofit on pages 47 through 53 of this change order.

Pontoon W:

* Transverse post-tensioning retrofit shall be performed as outlined on the plan set entitled "SR 520 Floating Bridge and Landings Project Transverse Post-Tensioning Retrofit Pontoon Type 3A" on pages 54 through 60 of this change order.
* The Design-Builder shall perform high level vent modifications as shown on the plan set entitled "SR 520 Floating Bridge and Landings Project Transverse Post -Tensioning Retrofit Pontoon Type 3" on pages 61 through 64 of this change order.

Modifications approved by WSDOT are provided for reference on pages 65 through 71 of this change order, and may be utilized for implementation of the Work provided in the following plan sets:

* "SR 520 Floating Bridge and Landings Project Bolt Beam Retrofit"
* "SR 520 Floating Bridge and Landings Project Transverse Post-Tensioning Retrofit Pontoon Type 3A"
* "SR 520 Floating Bridge and Landings Project Transverse Post-Tensioning Retrofit Pontoon Type 3"

CONTRACT NO: 008066 CHANGE ORDER NO: 108

Pontoons T, U, V, and W:
The following shall be performed as summarized in the Final Gerwick report dated April 2013 on pages 72 through 105 of this change order:

* Epoxy injection of cracks as outlined in Section 3.2
* Waterproof surface sealant shall be applied as outlined in Section 3.2 where full epoxy injection is not achievable for cracks less than 0.006 inches in width
* Surface preparation and application of an externally bonded carbon fiber-reinforced polymer (CFRP) system as outlined in Section 3.4
* Spall repair as outlined in Section 3.5
* Other repair as indicated in Section 3.6

Performance of the repairs shall not extend beyond the locations and limits identified in the Final Gerwick report dated April 2013 unless authorized by WSDOT.

Performance of unforeseen repairs not described in this change order or identified in the Final Gerwick report, shall be as approved in writing by WSDOT.

Technical representatives from Gerwick may be present during construction to advise the Design-Builder regarding the performance of the repairs and other Work as identified in this change order. Prior to Gerwick beginning any construction technical support, the scope of work, including the planned payments for travel and per diem compensation shall be approved by WSDOT.

The Design-Builder shall furnish all documentation in accordance with Technical Requirements Section 2.25 (Control of Materials) and 2.28 (Quality Management Plan). All materials and testing shall meet the requirements of WSDOT Standard Specifications (Appendix D18), Technical Requirements Section 2.25 and Section 2.28.

Measurement and Payment:
WSDOT will reimburse the Design-Builder under the new lump sum item "PFS Cycle 1 Repairs" in the amount of $45,598,780 which shall constitute full compensation for the performance of all Work related to the following:

* The use of Vigor Industrial dry docking facilities in Portland, OR and Seattle, WA, and the transport of Pontoon W to and from the facility in Seattle.
* Additional insurance costs associated with towing Pontoon T.
* Pontoon W buoyancy determination.
* Blocking to support Pontoons T and W in accordance with the approved blocking layouts.
* Fabrication, transport, use and removal of the coffer cell for the Type 1 longitudinal Pontoons U and V.
* Transverse post-tensioning retrofit.
* High level vent modifications.

CONTRACT NO: 008066 CHANGE ORDER NO: 108

* All repair Work as outlined in Section 3.6 of the Final Gerwick Report dated April 2013 that has no individual item established with a separate basis of measurement under this change order. This includes the application of the waterproofing surface sealant where epoxy injection is not achievable. The estimated quantity of waterproofing sealant for each Pontoon is as follows:
    * Pontoon T = 3,500 SF
    * Pontoon U = 3,500 SF
    * Pontoon V = 3,500 SF
    * Pontoon W = 5,000 SF

  The total estimated quantity of the four Pontoons is 15,500 SF. Should an increase in the total estimated quantity of 15,500 SF of the waterproofing sealant become necessary, the excess quantity will be addressed under a separate change order in accordance with Section 1-04.4 of the General Provisions.
* All technical support other than that provided by Gerwick for the performance of the Work.
* Submittal of all required documentation associated with the Work.

No Vigor dry docking liquidated damages attributable to WSDOT are included in the lump sum item "PFS Cycle 1 Repairs".

No specific unit of measure shall apply to the Pontoon T towing. Payment for towing Pontoon T, and associated costs, to and from Vigor's dry docking facility in Portland, OR, shall be calculated based on the actual invoice cost with the Project negotiated markup for forward-priced Work added to the total under the new item, "Pontoon T Tow". Associated towing costs shall include but not be limited to the primary tows, assist tugs, placement and removal from dry docking, additional dock space fees, and other costs as deemed reimbursable by WSDOT. The total reimbursement shall not exceed $917,413 unless otherwise approved in writing by WSDOT.

No specific unit of measure shall apply to the Work to remove and replace the structural elements above the Pontoon W deck or to perform unforeseen repairs to Pontoons T, U, V or W not described in this change order or identified in the Final Gerwick report. If required, reimbursement for this Work shall be calculated based on the actual cost of direct labor, materials and equipment usage with the Project negotiated markup for forward-priced Work added to the total under the new item "Addtl Pontoon Work". The total reimbursement shall not exceed $200,000 unless otherwise approved in writing by WSDOT.

No specific unit of measure shall apply to the Work involving the removal and replacement of blocking deemed necessary by WSDOT to complete repairs. If required, payment shall be calculated based on the actual cost of direct labor, materials and equipment usage with the Project negotiated markup for forward-priced Work added to the total, and will be made under the new item "Vigor Blocking" by calculation. The total reimbursement shall not exceed

$300,000 unless otherwise approved in writing by WSDOT.

No specific unit of measure shall apply to the construction technical support provided by Gerwick. Measurement for the construction technical representative support provided by Gerwick shall be calculated based on the actual cost of direct labor, materials and equipment usage with the Project negotiated markup for forward-priced Work added to the total. Payment will be made under the new item "Addtnl Gerwick Support" by calculation. No reimbursement will be provided for construction technical support provided prior to WSDOT's approval of the scope of work to be performed or for support provided after June 20, 2014 unless authorized by WSDOT. The total reimbursement shall not exceed $250,000 unless otherwise approved in writing by WSDOT.

Measurement of the crack repair by epoxy injection shall be by the linear foot of filled crack completed in accordance with the requirements of this change order. Reimbursement will be provided under the new item "Epoxy Injection" at the unit price of $48.50 per linear foot.

Measurement of the externally bonded CFRP material applied for the CFRP system shall be by the square foot of concrete surface area reinforced by the externally bonded CFRP system. Reimbursement will be provided under the new item "Externally Bonded CFRP" at the unit price of $99.27 per square foot.

Measurement of the CFRP topcoat applied for the CFRP system shall be by the square foot of concrete surface area reinforced by the externally bonded CFRP system. Reimbursement will be provided under the new item "CFRP Topcoat" at the unit price of $1.67 per square foot.

Measurement of spalls repaired in accordance with this change order shall be by cubic foot, and shall be the neat line volume of material in the spall repair area on a Pontoon. Reimbursement shall be provided under the new item, "Spall Repair" at the unit price of $5,184.00 per cubic foot. Spall repairs attributable to design deficiencies will be paid by this bid item. Unconsolidated concrete or other deficiencies shall be tracked separately for determination of responsibility and payment under this change order.

In accordance with General Provisions Section 1-09.3(1), upon final determination of the quantities for unit priced items, WSDOT will issue a Change Order setting forth the final adjustment to the Contract Price. The final determination will be made upon completion of all Work specified in this change order.

If the Work under this change order impacts the Design-Builder's costs for the other Work under this Contract, WSDOT will make an equitable adjustment in accordance with Section 1-04.4 of the General Provisions.

Time:
There shall be no increase in Contract Time addressed under this change order. Contract time will be addressed as necessary under a separate change

order. The Design-Builder warrants that all Work associated with this change order shall be completed no later than June 20, 2014. Any delays beyond this date, attributable to this change order and not the responsibility of WSDOT, shall be the responsibility of the Design-Builder.

DBE Goal:
The Design-Builder reserves its rights, to the extent provided for under the Contract, to seek additional compensation for added costs resulting from an increase in DBE requirements not otherwise included in the cost of this change order should WSDOT determine increased DBE participation is required as a result of the change order.

WASHINGTON STATE
DEPARTMENT OF TRANSPORTATION
CHANGE ORDER

CONTRACT NO: 008066 CHANGE ORDER NO: 108

ITEM NO	GROUP NO	STD ITEM	ITEM DESCRIPTION	UNIT MEASURE	UNIT PRICE	EST QTY CHANGE	EST AMT CHANGE
1051	01		PFS CYCLE 1 REPAIRS	L.S.	0.00	0.00	45,598,780.00
1052	01		PONTOON T TOW	CALC	0.00	0.00	917,413.00
1053	01		ADDTNL PONTOON WORK	CALC	0.00	0.00	200,000.00
1054	01		VIGOR BLOCKING	CALC	0.00	0.00	300,000.00
1055	01		ADDTNL GERWICK SUPPORT	CALC	0.00	0.00	250,000.00
1056	01		EPOXY INJECTION	L.F.	48.50	1,000.00	48,500.00
1057	01		EXTERNALLY BONDED CFRP	S.F.	99.27	13,500.00	1,340,145.00
1058	01		CFRP TOPCOAT	S.F.	1.67	13,500.00	22,545.00
1059	01		SPALL REPAIR	C.F.	5,184.00	16.00	82,944.00
							48,760,327.00

Contract No.: 008066
Change Order No.: 108
Page 9 of 105

PONTOON 'T' BLOCKING LAYOUT

PLAN VIEW

KGM

No.	Date	By	Revision

PONTOON 'T' BLOCKING

'T'-PONTOON DRY-DOCK BLOCKING LAYOUT

SR 520 Floating Bridge and Landings

Kiewit / General / Manson A Joint Venture

Corporate Campus East
3015 112th Avenue N.E. - Suite 100
Bellevue, WA, 98004

Date: 6/24/13
Drawn: JSA
Checked:
Scale: N/A
Sheet
1

Contract No.: 0080066
Change Order No.: 108
Page 10 of 105

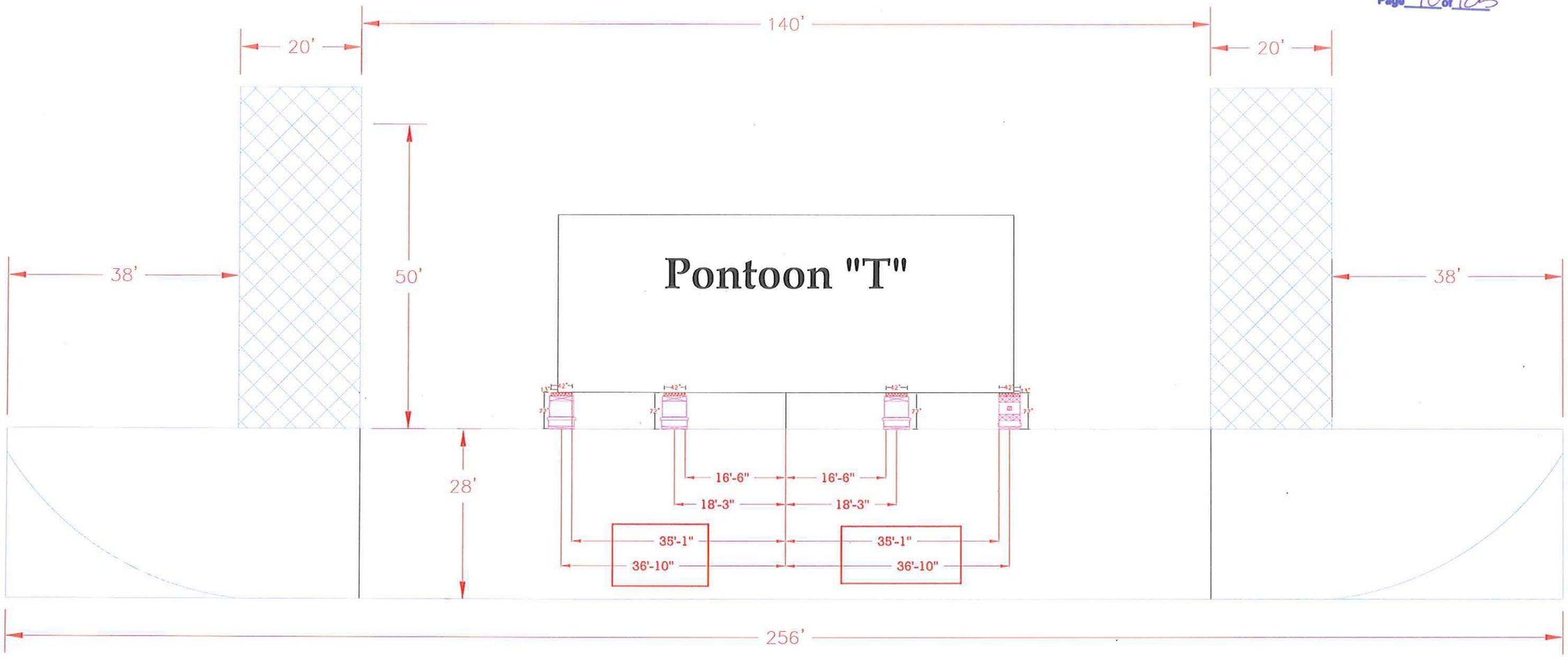

PONTOON 'T' BLOCKING LAYOUT

ELEVATION VIEW

No.	Date	By	Revision

PONTOON T BLOCKING

T- PONTOON
DRY-DOCK BLOCKING LAYOUT

SR 520 Floating Bridge and Landings

Kiewit / General /
Manson A Joint Venture

Corporate Campus East
3015 112th Avenue N.E. - Suite 100
Bellevue, WA, 98004

Date: 6/24/13
Drawn: JSA
Checked:
Scale: N/A
Sheet
2

Contract No.: 0080066
Change Order No.: 108
Page 11 of 105

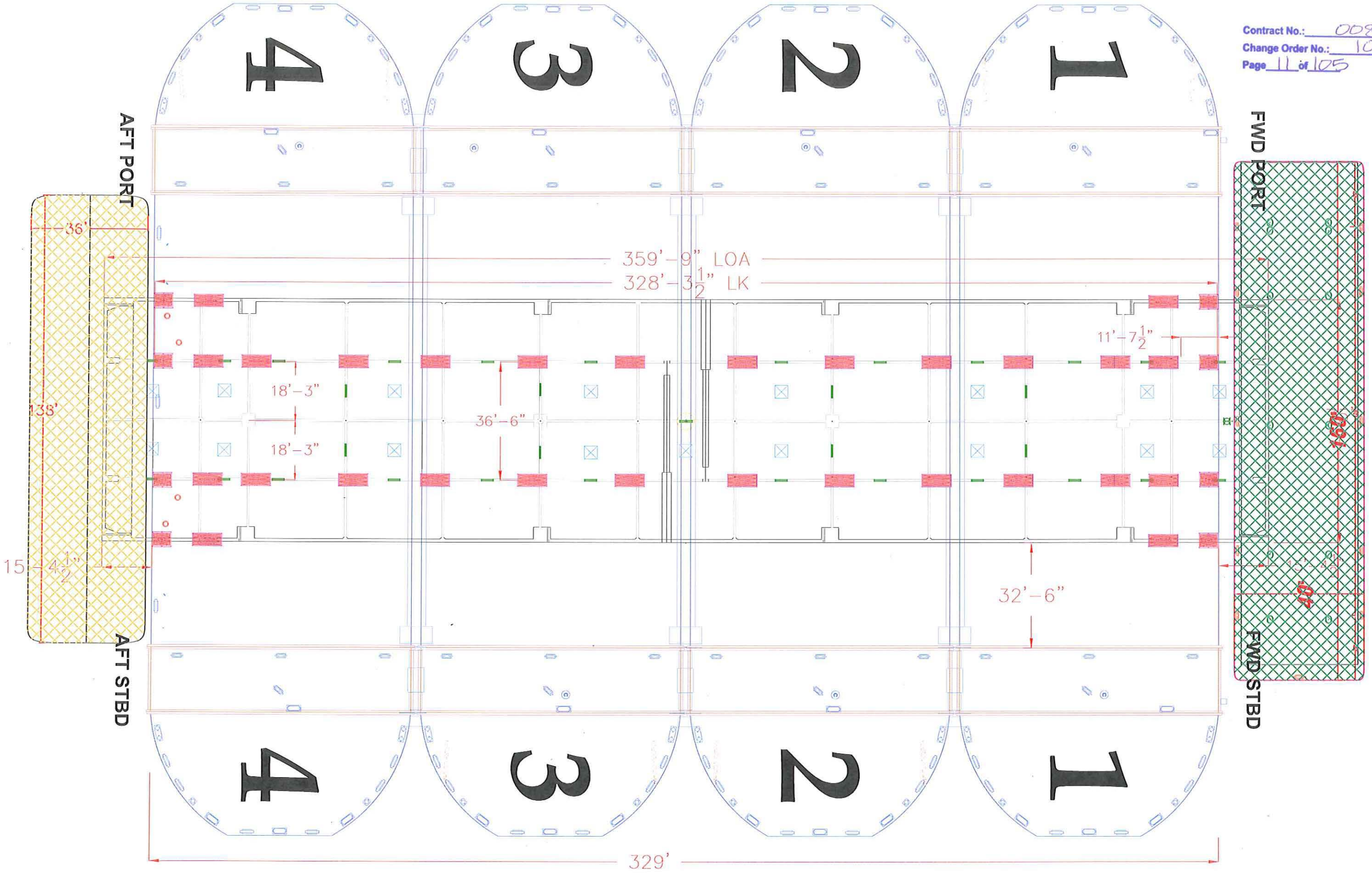

PONTOON 'T' BLOCKING LAYOUT

No.	Date	By	Revision

PONTOON T BLOCKING

T- PONTOON
DRY-DOCK BLOCKING LAYOUT

SR 520 Floating Bridge and Landings

Kiewit / General /
Manson A Joint Venture

Corporate Campus East
3015 112th Avenue N.E. - Suite 100
Bellevue, WA. 98004

Date: 6/24/13
Drawn: JSA
Checked:
Scale: N/A
Sheet
3

Contract No.: 008066
Change Order No.: 108
Page 12 of 105

REVISION 2 (BWT 7.3.13)

DRYDOCK #10

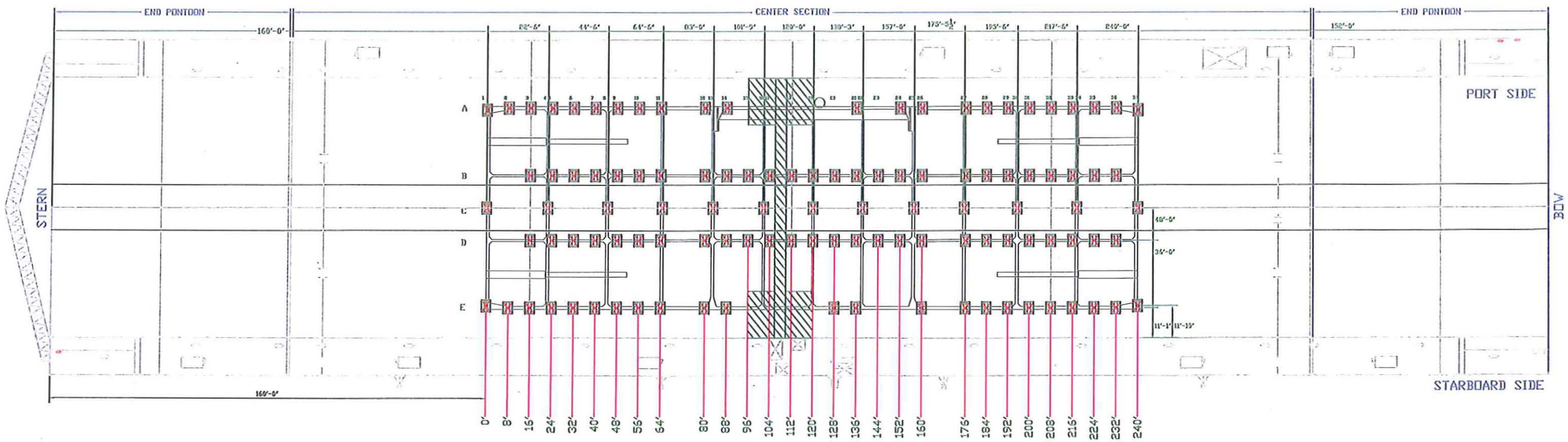

NOTES:

1. ALL DIMENSIONS ARE TO CENTERLINE OF BLOCK.

2. CENTER OF BLOCKS ARE PLACED UNDER THE CENTER OF WALL EXCEPT FOR THE FOUR CORNER BLOCKS.

PONTOON W BLOCKING LAYOUT

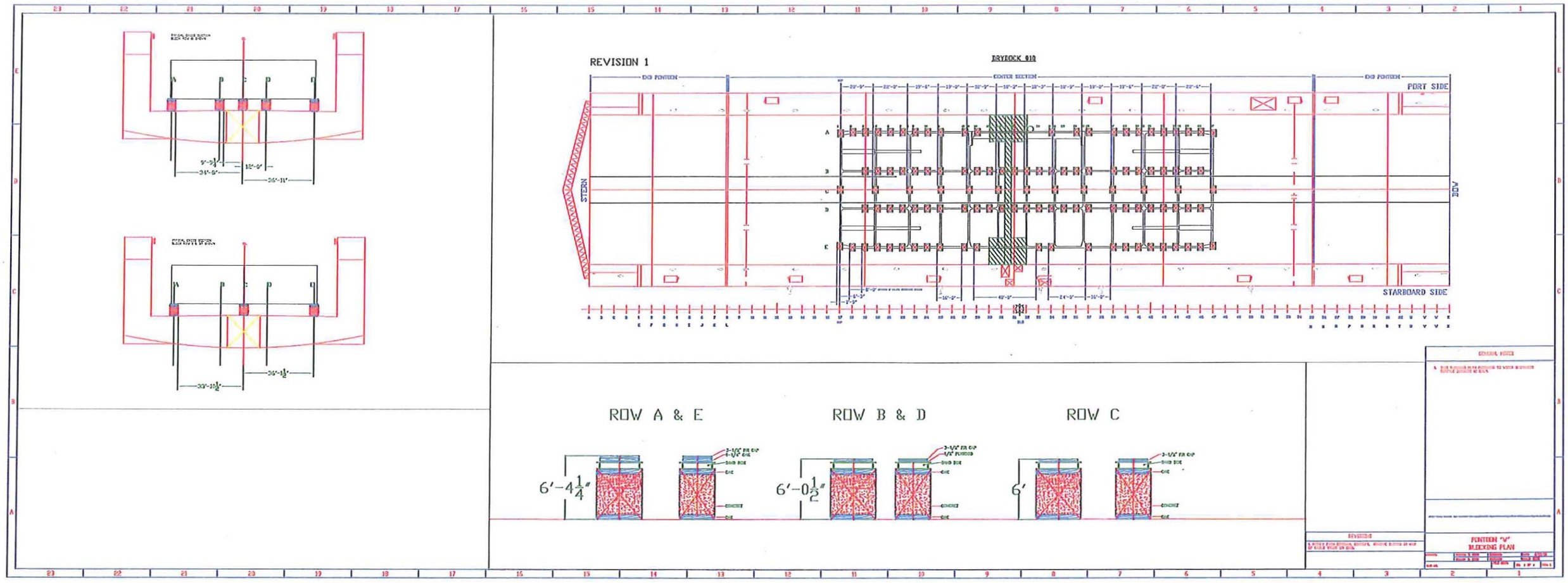

PONTOON W BLOCKING LAYOUT

Contract No.: 0080066
Change Order No.: 108
Page 14 of 105

SR-520 FLOATING BRIDGE REPLACEMENT
COFFERDAM DRAWINGS

Rev.	Date	Description of Revision	Designed	Drawn	Checked

DESIGNED BY	CHECKED BY	DATE
SY	WCM	01/25/13
DRAWN BY	PLOT SCALE	PROJECT NUMBER
JUSA		
SIZE	PLOT DATE	FILE NAME
ANSI B	22-May-13	LC 001.DWG

THIS DRAWING AND THE INFORMATION CONTAINED HEREIN ARE THE PROPERTY OF BEN C. GERWICK, INC. AND MAY NOT BE REPRODUCED, DISTRIBUTED, MODIFIED, REPOSTED OR OTHERWISE USED WITHOUT THE PERMISSION OF BCG INC.

SAMUEL X. YAO
STATE OF WASHINGTON
36791
REGISTERED
PROFESSIONAL ENGINEER
5/23/2013

Washington State Department of Transportation

Kiewit/General/Manson
A Joint Venture

BEN C. GERWICK, INC.
A CCM Company

PROJECT NAME
SR 520 COFFERDAM

DRAWING TITLE
COVER SHEET

Sheet No.
LC 000
Sheet of

FILE LOCATION: P:\2012\2012-001\DWG\STAMPS\D_LARGE COFFERDAM\DWG\LC 001.DWG DATE: 5/23/2013 4:46:18 PM DRAFTSPERSON: JULIUS BACNILLO

STRUCTURAL GENERAL NOTES:

1. GOVERNING PRECEDENCE:

- WASHINGTON STATE DESIGN MANUALS AND STANDARD SPECIFICATIONS, LATEST EDITIONS;
- AASHTO LRFD DESIGN SPECIFICATIONS, U.S. CUSTOMARY UNITS;
- ASHTO LRFD BRIDGE CONSTRUCTION SPECIFICATIONS, U.S. 3rd EDITION, 2010 AND 2011 INTERIMS;
- AWS D1.1 STRUCTURAL WELDING CODE–STEEL, LATEST EDITION;
- AISC STEEL CONSTRUCTION MANUAL, 14TH EDITION

2. MATERIALS:

2.1 CONCRETE FILL, COMPRESSIVE STRENGTH fc' = 2,500 PSI AT 28 DAYS

2.2 HIGH STRENGTH ROD

SHALL BE ALL–THEADED–BARS CONFORMING TO ASTM A722, GRADE 150 (TYPE II), (WILLIAMS OR APPROVED EQUAL).

2.3 STRUCTURAL STEEL

STRUCTURAL STEEL, STEEL PLATES SHALL BE IN ACCORDANCE WITH ASTM A572 GRADE 50 OR APPROVED EQUAL, UNLESS NOTED OTHERWISE.

STEEL PLATES AND WELD METAL FOR PADEYE IN TENSION SHALL MEET THE CHARPY V–NOTCH IMPACT REQUIREMENTS FOR FRACTURE CRITICAL MEMBERS IN ZONE 2 IN ACCORDANCE WITH AASHTO LRFD.

2.4 FASTENERS

HIGH STRENGTH BOLTS: ASTM A325 OR A490. TYPE 3

BOLT HOLES SHALL BE 1/16" LARGER THAN THE BOLT DIAMETER UNLESS NOTED OTHERWISE.

BOLTED CONNECTIONS SHALL BE BEARING–TYPE CONNECTION WITH THREADS EXCLUDED FROM THE SHEAR PLANE UNLESS NOTED OTHERWISE.

2.5 STEEL BAR GRATING

THE WELDED BEARING BAR SIZE SHALL BE 1/4"x1 3/16"

3. WELDING:

3.1 WELDING SHALL BE ACCORDANCE WITH AWS (AMERICAN WELDING SOCIETY) D1.1, STRUCTURAL WELDING CODE–STEEL, LATEST EDITION.

3.2 ALL STRUCTURAL AND SEAL WELDS THAT CONSTITUTE A SEAL AGAINST WATER INTRUSION INTO THE WALLS AND FLOOR OF THE COFFERDAM, AND ALL COMPLETE PENETRATION WELDS SHALL BE 100% INSPECTED BY UT (ULTRASONIC TESTING) FOR FULL AND PARTIAL PENETRATION WELD AND BY MT (MAGNETIC TESTING) FOR FILLET WELD. WELD AREA THAT PRESENT FLAWS SHALL BE GROUND OFF AND REWELDED.

4. CONSTRUCTION:

4.1 CONSTRUCTION SPECIFICATIONS

ALL CONSTRUCTION WORKS AND TOLERANCES SHALL COMFORM TO THE REQUIREMENTS OF WASHINGTON STATE STANDARD SPECIFICATIONS, AASHTO LRFD BRIDGE CONSTRUCTION SPECIFICATIONS, AND AISC STEEL CONSTRUCTION MANUAL.

4.2 CONTRACTOR TO SUBMIT COMPLETE SET OF SHOP DRAWINGS FOR REVIEW BY DESIGN ENGINEER. INCLUDE LAYOUT DRAWING, DETAILED FABRICATION AND CONNECTION DRAWING, WELDING PROCEDURES

5. PRESSURE TEST:

5.1 ALL COFFERDAM WALLS AND BOUYANCY TANKS SHALL BE PRESSURE TESTED WITH AN AIR PRESSURE EQUAL TO 2 PSI. SPRAY ALL EXTERIOR WELDS WITH SOAP AND WATER SOLUTION. PRESSURE TO BE HELD FOR 10 MINUTES. REPAIR WELDS THAT PRESENT LEAKS.

6. SEAL SPLICING:

6.1 DETAILS AND CONSTRUCTION PROCEDURE OF SEAL SPLICING AND AT CORNERS SHALL FOLLOW MANUFACTURER'S RECOMMENDATION.

DRAWING INDEX LARGE COFFERDAM

No.	DWG No.	DESCRIPTION	REVISION
1	LC 001	GENERAL NOTES, DRAWING INDEX	
2	LC 002	FRAMING PLAN 1 FOR PONTOON	
3	LC 003	WALL PLAN FOR PONTOON	
4	LC 004	GENERAL PLAN FOR PONTOON	
5	LC 004A	TOP PLAN	
6	LC 005	FRAMING SECTION 1 FOR PONTOON	
7	LC 006	FRAMING SECTION 2 FOR PONTOON	
8	LC 007	TYPICAL STEEL DETAILS	
9	LC 008	FRAMING DETAILS 1	
10	LC 009	FRAMING SECTIONS AND DETAILS	
11	LC 010	TRANSVERSE AND LONGITUDINAL TRUSS ELEVATION	
12	LC 010A	LONGITUDINAL TRUSS 2 ELEVATION	
13	LC 011	TRUSS CONNECTION AND DETAILS	
14	LC 011A	TRUSS CONNECTION DETAILS	
15	LC 012	SECTION A – X BRACE DETAIL	
16	LC 013	COLUMN GIRDER INTERSECTION DETAIL	
17	LC 014	BRACING DETAIL	
18	LC 017	SUMPS SECTION AND DETAILS	
19	LC 018	HYDRAULIC STRUTS DETAILS	
20	LC 019	FLEXIFLOAT AND CONNECTION 1	
21	LC 020	SEAL DETAILS	
22	LC 021	SLIDING DOOR PLAN, SECTIONS AND DETAILS	
23	LC 022	SLIDING DOOR PLAN, SECTIONS AND DETAILS	
24	LC 023	SLIDING DOOR SECTIONS AND DETAILS	
25	LC 024	SLIDING DOOR DETAILS	
26	LC 025	SLIDING DOOR SECTIONS AND DETAILS	
27	LC 026	LOW WALL DETAILS	
28	LC 030	COFFERDAM ACCESS PLAN AND SECTIONS	
29	LC 031	COFFERDAM ACCESS DETAILS	
30	LC 032	TANK PLAN	
31	LC 033	BALLAST WATER SYSTEM SCHEMATIC	

Contract No.: 008066
Change Order No.: 108
Page 15 of 105

Rev.	Date	Description of Revision	Designed	Drawn	Checked

DESIGNED BY	CHECKED BY	DATE
SY	WOM	01/25/13
DRAWN BY	PLOT SCALE	PROJECT NUMBER
JUSA		
SIZE	PLOT DATE	FILE NAME
ANSI B	22-May-13	LC 001.DWG

THIS DRAWING AND THE INFORMATION CONTAINED HEREIN ARE THE PROPERTY OF BEN C. GERWICK, INC. AND MAY NOT BE REPRODUCED, DISTRIBUTED, MODIFIED, REPOSTED OR OTHERWISE USED WITHOUT THE PERMISSION OF BCG INC.

SAMUEL X. YAO — STATE OF WASHINGTON — 46791 — REGISTERED PROFESSIONAL ENGINEER — 5/23/2013

Washington State Department of Transportation

Klewit/General/Manson A Joint Venture

BEN C. GERWICK, INC. A GCM Company

PROJECT NAME: SR 520 LARGE COFFERDAM

DRAWING TITLE: GENERAL NOTES, DRAWING INDEX

Sheet No. LC 001 Sheet of

FILE LOCATION: P:\2012\2012-009\DRWG\STAMPED_LARGE COFFERDAM\DWG\LC 001.DWG DATE: 5/22/2013 4:46:11 PM BY:MATTDRAWSON JULIUS SACRILLO

Contract No.: 008066
Change Order No.: 108
Page 16 of 105

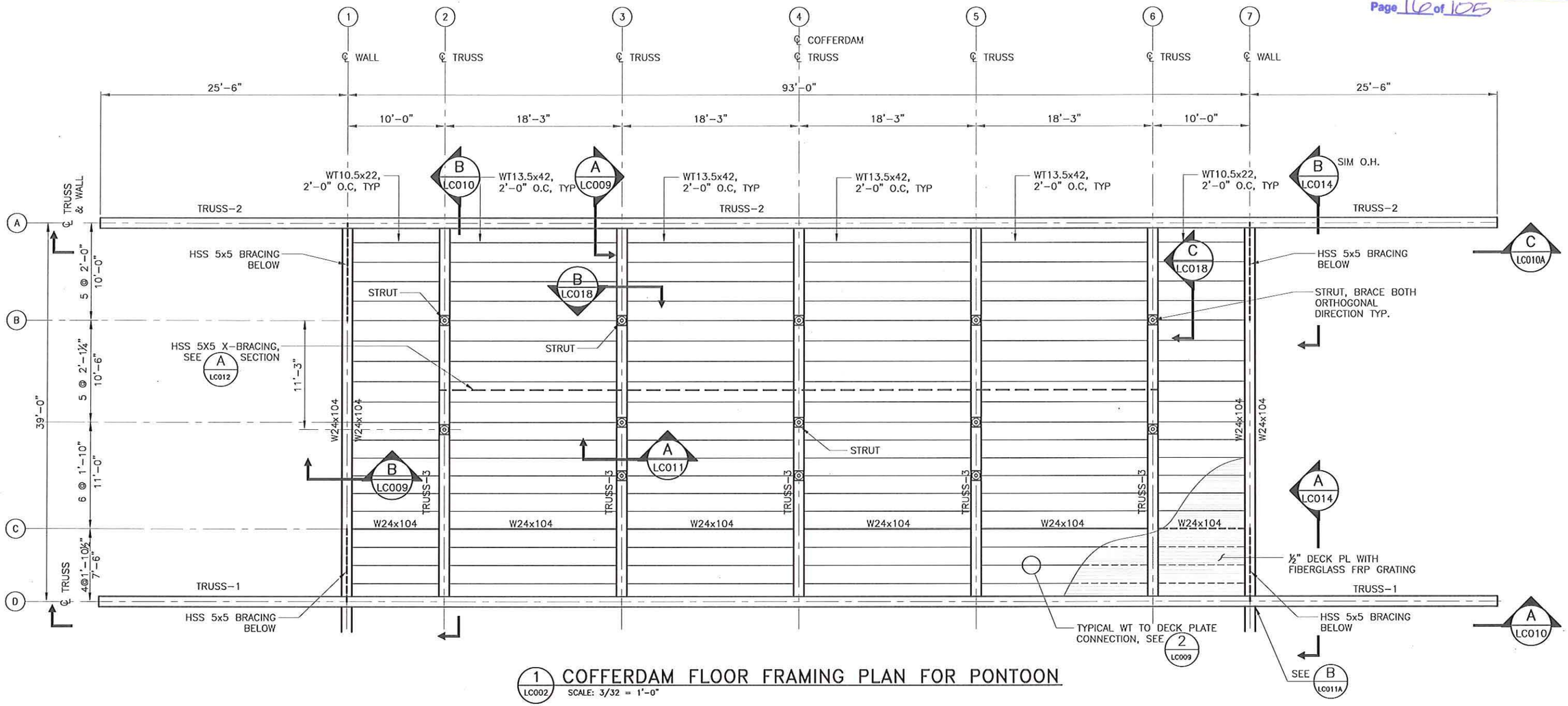

1 LC002 COFFERDAM FLOOR FRAMING PLAN FOR PONTOON
SCALE: 3/32 = 1'-0"

Rev.	Date	Description of Revision	Designed	Drawn	Checked

DESIGNED BY	CHECKED BY	DATE
SY	WCM	01/25/13
DRAWN BY	PLOT SCALE	PROJECT NUMBER
JUSA		
SIZE	PLOT DATE	FILE NAME
ANSI B	22-May-13	LC 002.DWG

THIS DRAWING AND THE INFORMATION CONTAINED HEREIN ARE THE PROPERTY OF BEN C. GERWICK, INC. AND MAY NOT BE REPRODUCED, DISTRIBUTED, MODIFIED, REPOSITED, OR OTHERWISE USED WITHOUT THE PERMISSION OF BCG INC.

SAMUEL X. YAO
STATE OF WASHINGTON
REGISTERED PROFESSIONAL ENGINEER
5/23/2013

Washington State Department of Transportation
Kiewit/General/Manson A Joint Venture
BEN C. GERWICK, INC. A CCM Company

PROJECT NAME
SR 520 COFFERDAM
DRAWING TITLE
COFFERDAM FLOOR FRAMING PLAN FOR PONTOON

Sheet No.
LC 002
Sheet of

FILE LOCATION: P:\2012\2012-0599\DRAWINGS\TAMPID_LARGE COFFERDAMS\DWG\LC 002.DWG DATE: 5/22/2013 4:46:16 PM DRAFTSPERSON: JULIUS SIADINELLO

Contract No.: 008066
Change Order No.: 108
Page 17 of 105

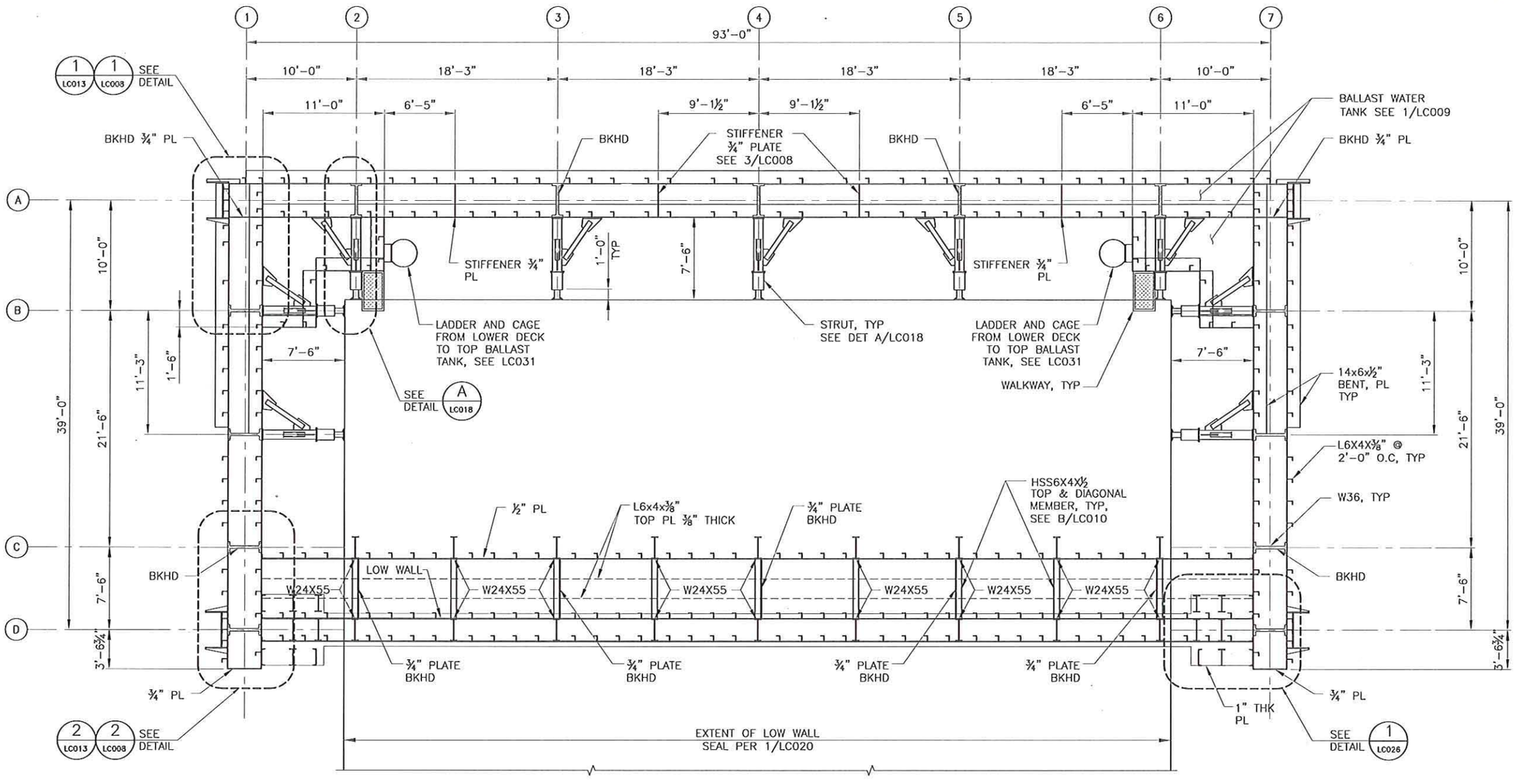

1 LC005 WALL PLAN FOR PONTOON

SCALE: 3/32 = 1'-0"

NOTE:

1. BKHD – ALL BULKHEAD ARE WATER TIGHT WITH NO HOLES
2. ALL INTERIOR COLUMNS, STIFFENER AND W36 GIRDERS INSIDE EACH WATER TANK TO HAVE 6"ø HOLE 4'-0" O.C.
3. STRUT ABOVE THE GATE NOT SHOWN FOR CLARITY, SEE LC022.

Rev.	Date	Description of Revision	Designed	Drawn	Checked

DESIGNED BY	CHECKED BY	DATE
SY	WGM	6/25/13
DRAWN BY	PLOT SCALE	PROJECT NUMBER
JUSA		
SIZE	PLOT DATE	FILE NAME
ANSI B	22-May-13	LC003.DWG

THIS DRAWING AND THE INFORMATION CONTAINED HEREON ARE THE PROPERTY OF BEN C. GERWICK, INC. AND MAY NOT BE REPRODUCED, DISTRIBUTED, MODIFIED, REPOSITED OR OTHERWISE USED WITHOUT THE PERMISSION OF BCG INC.

SAMUEL X. TAO, STATE OF WASHINGTON, 46791, REGISTERED PROFESSIONAL ENGINEER
5/23/2013

Washington State Department of Transportation

Kiewit/General/Manson A Joint Venture

BEN C. GERWICK, INC. A CCM Company

PROJECT NAME: SR 520 COFFERDAM

DRAWING TITLE: WALL PLAN FOR PONTOON

Sheet No. LC 003

Sheet of

FILE LOCATION: P:\2012\2013-009\DRWG\CONTRAPTO_LARGE COFFERDAMS\LC003.DWG DATE: 5/22/2013 4:46:18 PM DRAFTSPERSON: JULIUS RACINELLO

Contract No.: 008066
Change Order No.: 108
Page 18 of 105

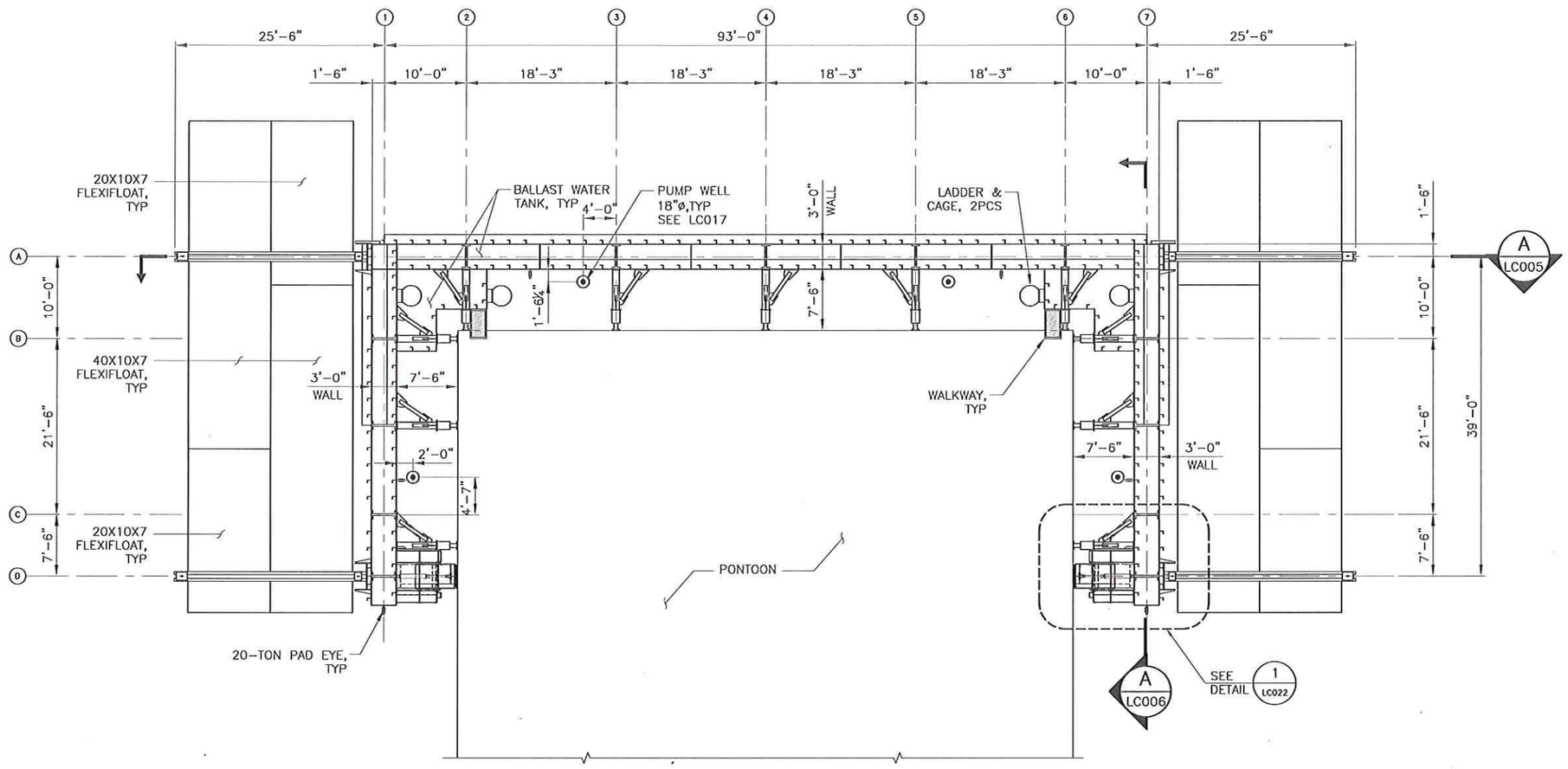

1 GENERAL PLAN PONTOON
SCALE: 1/16 = 1'-0"

Rev.	Date	Description of Revision	Designed	Drawn	Checked

DESIGNED BY	CHECKED BY	DATE
SY	WCM	01/23/13
DRAWN BY	PLOT SCALE	PROJECT NUMBER
JUSA		
SIZE	PLOT DATE	FILE NAME
ANSI B	22-May-13	LC 004.DWG

THIS DRAWING AND THE INFORMATION CONTAINED HEREIN ARE THE PROPERTY OF BEN C. GERWICK, INC. AND MAY NOT BE REPRODUCED, DISTRIBUTED, REPORTED OR OTHERWISE USED WITHOUT THE PERMISSION OF BCG INC.

SAMUEL X. YAO, STATE OF WASHINGTON, 46791, REGISTERED PROFESSIONAL ENGINEER
5/23/2013

Washington State Department of Transportation

Klewit/General/Manson A Joint Venture

BEN C. GERWICK, INC. A CH2M Company

PROJECT NAME: SR 520 COFFERDAM

DRAWING TITLE: GENERAL PLAN PONTOON

Sheet No. LC 004

Sheet of

FILE LOCATION: P:\2012\2012-009\DWG\STAMPED_LARGE COFFERDAM\DWG\LC 004.DWG DATE: 5/22/2013 4:46:29 PM DRAFTSPERSON: JULIUS BACHNILLO

Contract No.: 008066
Change Order No.: 108
Page 19 of 105

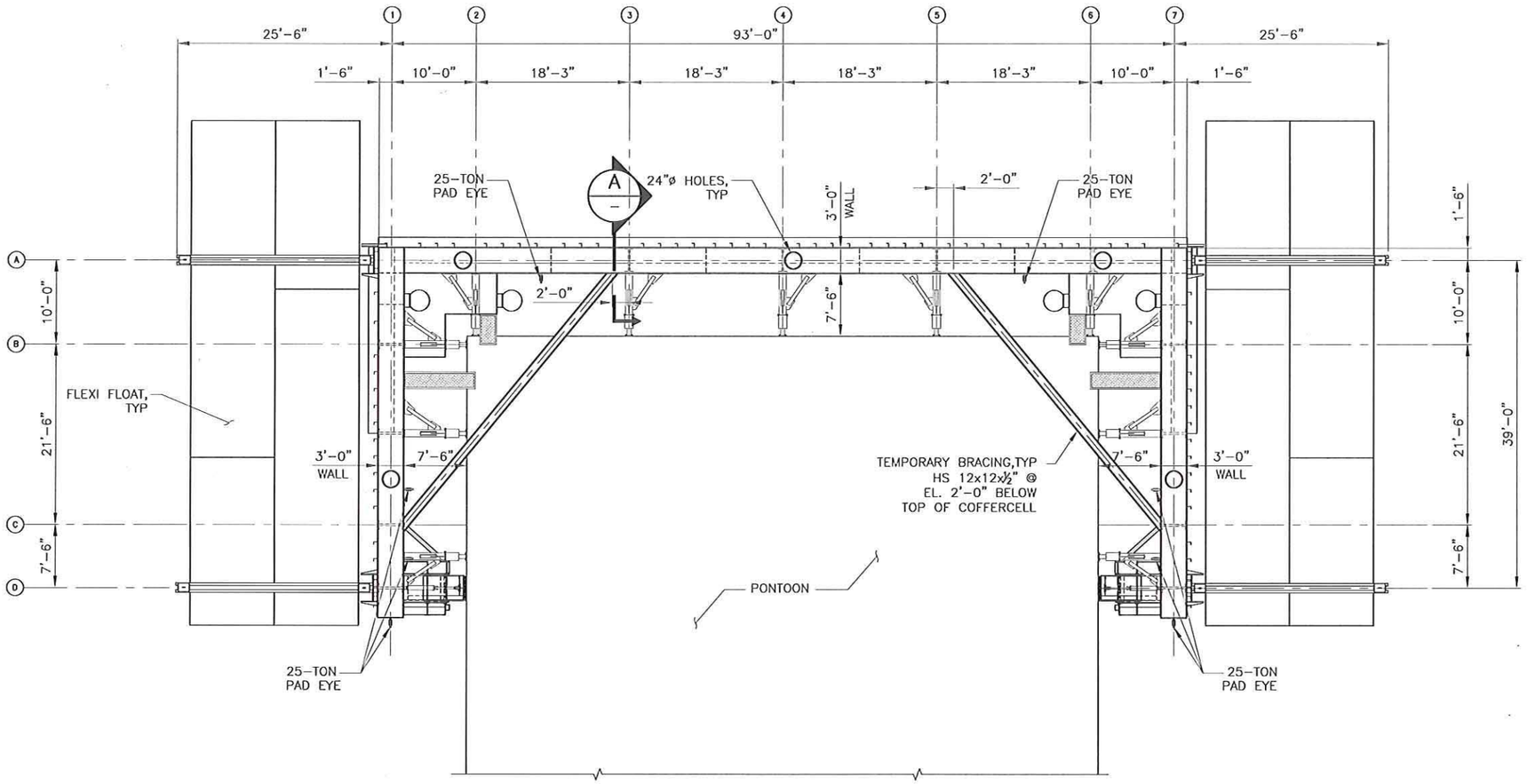

1 TOP PLAN
SCALE: 1/16 = 1'-0"

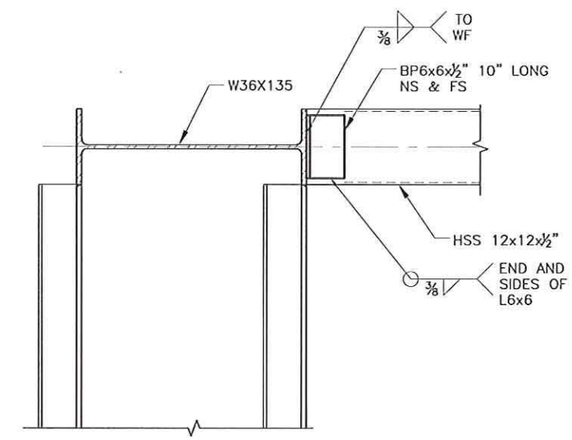

A SECTION
SCALE: 1/2 = 1'-0"

Rev.	Date	Description of Revision	Designed	Drawn	Checked

DESIGNED BY	CHECKED BY	DATE
SY	WOM	01/25/13
DRAWN BY	PLOT SCALE	PROJECT NUMBER
JUSA		
SIZE	PLOT DATE	FILE NAME
ANSI B	22-May-13	LC 004A.DWG

THIS DRAWING AND THE INFORMATION CONTAINED HEREIN ARE THE PROPERTY OF BEN C. GERWICK, INC. AND MAY NOT BE REPRODUCED, DISTRIBUTED, MODIFIED, RE-POSTED, OR OTHERWISE USED WITHOUT THE PERMISSION OF BCG INC.

SAMUEL X. YAO — STATE OF WASHINGTON — 38701 — REGISTERED PROFESSIONAL ENGINEER — 5/23/2013

Washington State Department of Transportation

Klewit/General/Manson A Joint Venture

BEN C. GERWICK, INC. A GCM Company

PROJECT NAME: SR 520 COFFERDAM

DRAWING TITLE: TOP PLAN

Sheet No.: LC 004A

Sheet of

FILE LOCATION: P:\2013\2013-08\08WG\STAMP\0_LARGE COFFERDAM\CNCLC004A.DWG DATE: 5/22/2013 4:46:23 PM DRAFTSPERSON: JULIUS BACINELLO

Contract No.: 008066
Change Order No.: 108
Page 20 of 105

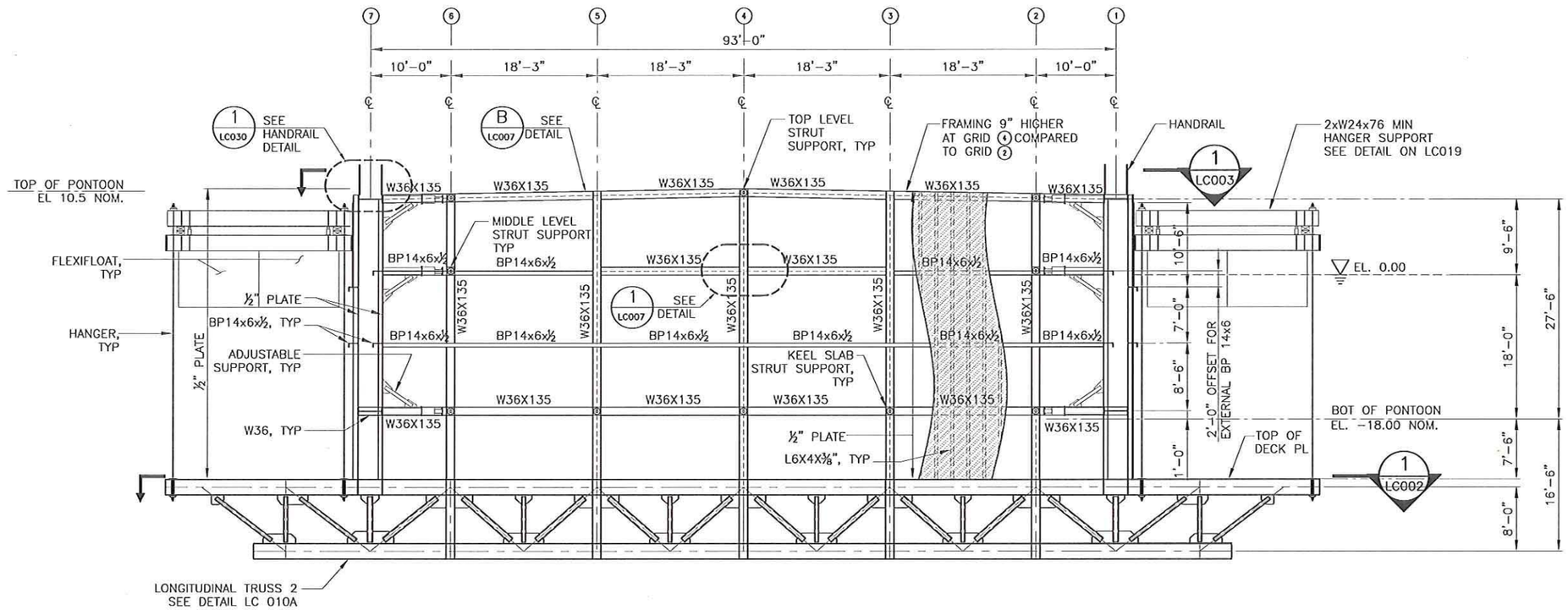

A – WALL ELEVATION PONTOON
SCALE: 1/16 = 1'-0"

Rev.	Date	Description of Revision	Designed	Drawn	Checked

DESIGNED BY	CHECKED BY	DATE
SY	WOM	01/25/13
DRAWN BY	PLOT SCALE	PROJECT NUMBER
JUSA		
SIZE	PLOT DATE	FILE NAME
ANSI B	22-May-13	LC 005.DWG

THIS DRAWING AND THE INFORMATION CONTAINED HEREON ARE THE PROPERTY OF BEN C. GERWICK, INC. AND MAY NOT BE REPRODUCED, DISTRIBUTED, MODIFIED, REPOSTED OR OTHERWISE USED WITHOUT THE PERMISSION OF BCG INC.

SAMUEL X. YAO STATE OF WASHINGTON 46791 REGISTERED PROFESSIONAL ENGINEER 5/23/2013

Washington State Department of Transportation

Kiewit/General/Manson A Joint Venture

BEN C. GERWICK, INC. A CCM Company

PROJECT NAME: SR 520 COFFERDAM

DRAWING TITLE: WALL ELEVATION PONTOON

Sheet No. LC 005

Sheet of

FILE LOCATION: P:\2012\2012-06\DGN\CONTRAPTO_LARGE COFFER\DAMON\GLC 005.DWG DATE: 5/21/2013 4:46:25 PM DRAFTSPERSON: JULIUS SACNILLO

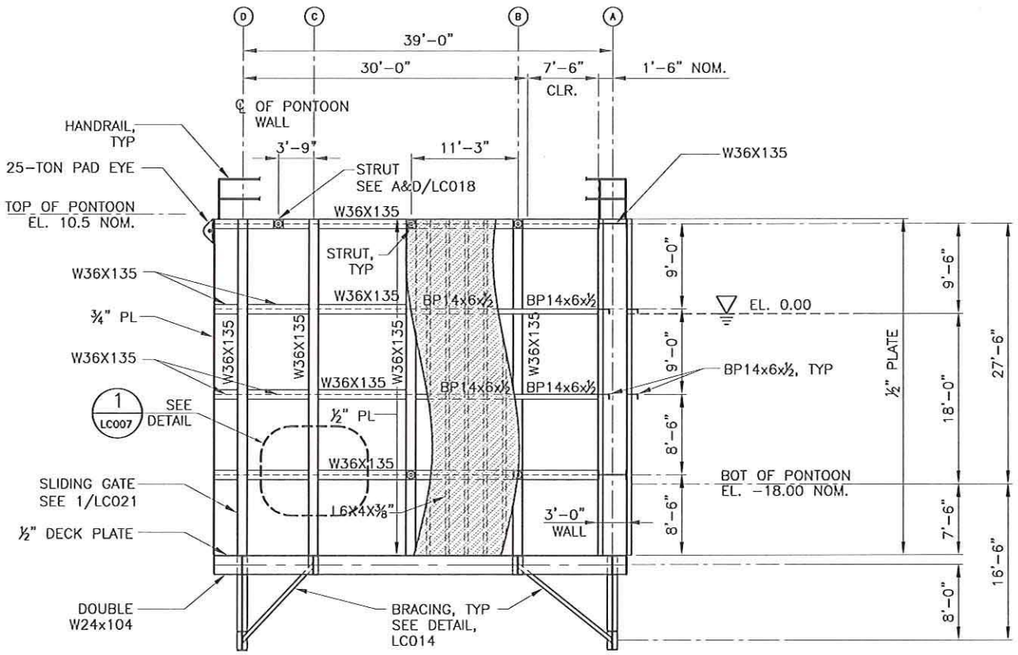

A
LC004
WALL ELEVATION PONTOON
SCALE: 1/16 = 1'-0"

Rev.	Date	Description of Revision	Designed	Drawn	Checked

DESIGNED BY		CHECKED BY	DATE
SY		WCM	01/25/13
DRAWN BY	PLOT SCALE	PROJECT NUMBER	
JUSA			
SIZE	PLOT DATE	FILE NAME	
ANSI B	22-May-13	LC 006.DWG	

THIS DRAWING AND THE INFORMATION CONTAINED HEREIN ARE THE PROPERTY OF BEN C. GERWICK, INC. AND MAY NOT BE REPRODUCED, DISTRIBUTED, MODIFIED, REPOSTED OR OTHERWISE USED WITHOUT THE PERMISSION OF BCG INC.

SAMUEL X. YAO
STATE OF WASHINGTON
M-31
REGISTERED
PROFESSIONAL ENGINEER
5/23/2013

Washington State Department of Transportation

Kiewit/General/Manson
A Joint Venture

BEN C. GERWICK, INC.
A CCM Company

PROJECT NAME
SR 520 COFFERDAM
DRAWING TITLE
WALL ELEVATION PONTOON

Sheet No.
LC 006
Sheet of

FILE LOCATION: P:\0710\2012-\0\BDR\WSDT\AMPRD_LARGE COFFERDAM\DWG\LC 006.DWG DATE: 5/22/2013 4:46:27 PM DRAFTSPERSON: JULIUS MACINILLO

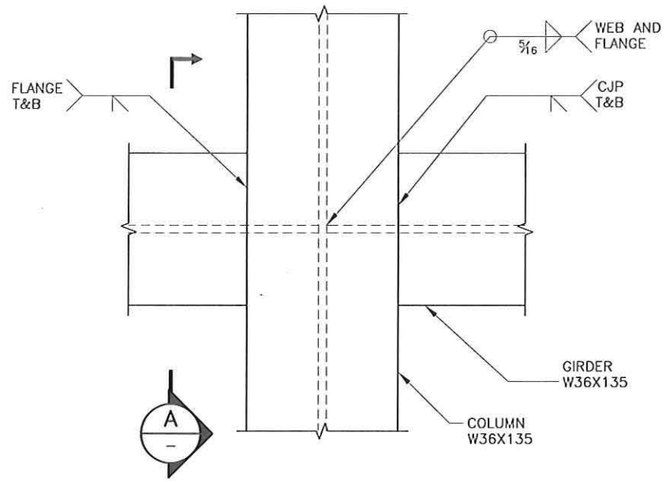

1 LC005 DETAIL COLUMN GIRDER CONNECTION
SCALE: 1" = 1'-0"

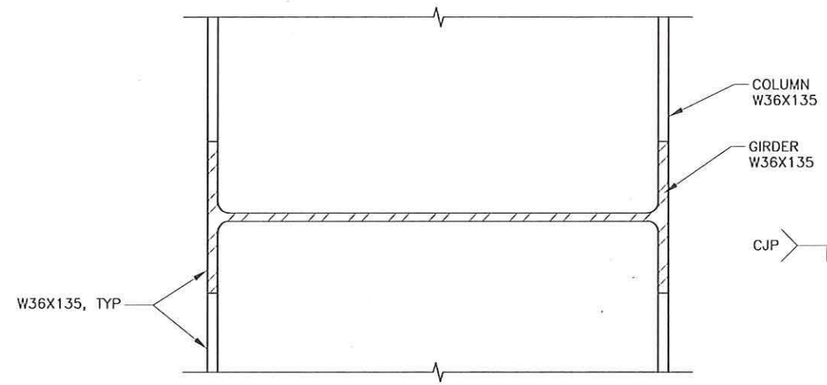

A – SECTION
SCALE: 1" = 1'-0"

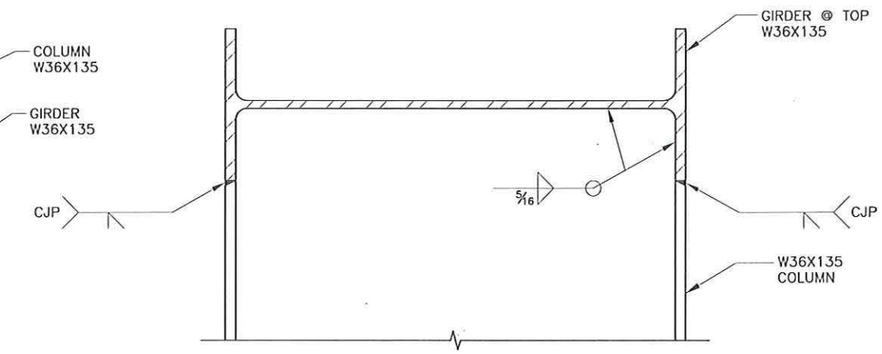

B LC005 TYPICAL DETAIL TOP OF COLUMNN GIRDER CONNECTION
SCALE: 1" = 1'-0"

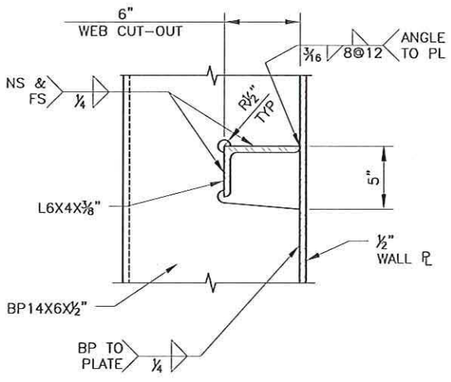

4 LC008 DETAIL
SCALE: 1" = 1'-0"

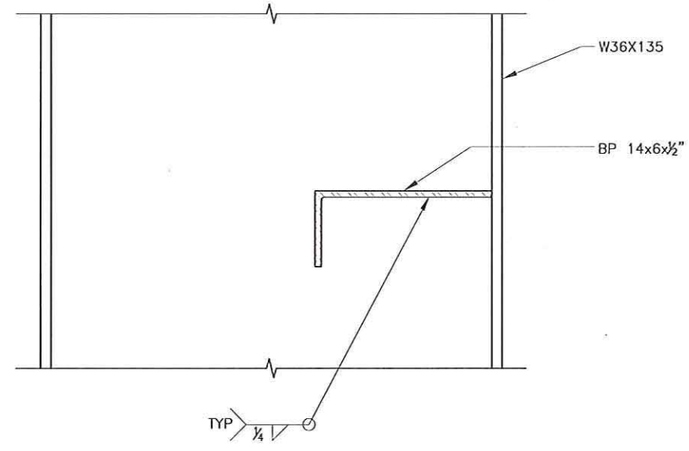

5 LC008 DETAIL
SCALE: 1" = 1'-0"

Rev.	Date	Description of Revision	Designed	Drawn	Checked

DESIGNED BY	CHECKED BY	DATE
SY	WCM	01/25/13
DRAWN BY	PLOT SCALE	PROJECT NUMBER
JUSA		
SIZE	PLOT DATE	FILE NAME
ANSI B	22-May-13	LC 007.DWG

THIS DRAWING AND THE INFORMATION CONTAINED HEREIN ARE THE PROPERTY OF BEN C. GERWICK, INC. AND MAY NOT BE REPRODUCED, DISTRIBUTED, MODIFIED, REPOSTED OR OTHERWISE USED WITHOUT THE PERMISSION OF BCG INC.

SAMUEL X. YAO
STATE OF WASHINGTON
46731
REGISTERED PROFESSIONAL ENGINEER
5/23/2013

Washington State Department of Transportation

Klewit/General/Manson A Joint Venture

BEN C. GERWICK, INC. A CCM Company

PROJECT NAME
SR 520 COFFERDAM

DRAWING TITLE
TYPICAL STEEL DETAILS

Sheet No.
LC 007
Sheet of

FILE LOCATION: P:\2012\2012-059\DRWG\STAMPED_LARGE COFFER\HDMG\WCLC007.DWG DATE: 5/22/2013 4:46:29 PM DRAFTSPERSON: JULIUS BAQUILLO

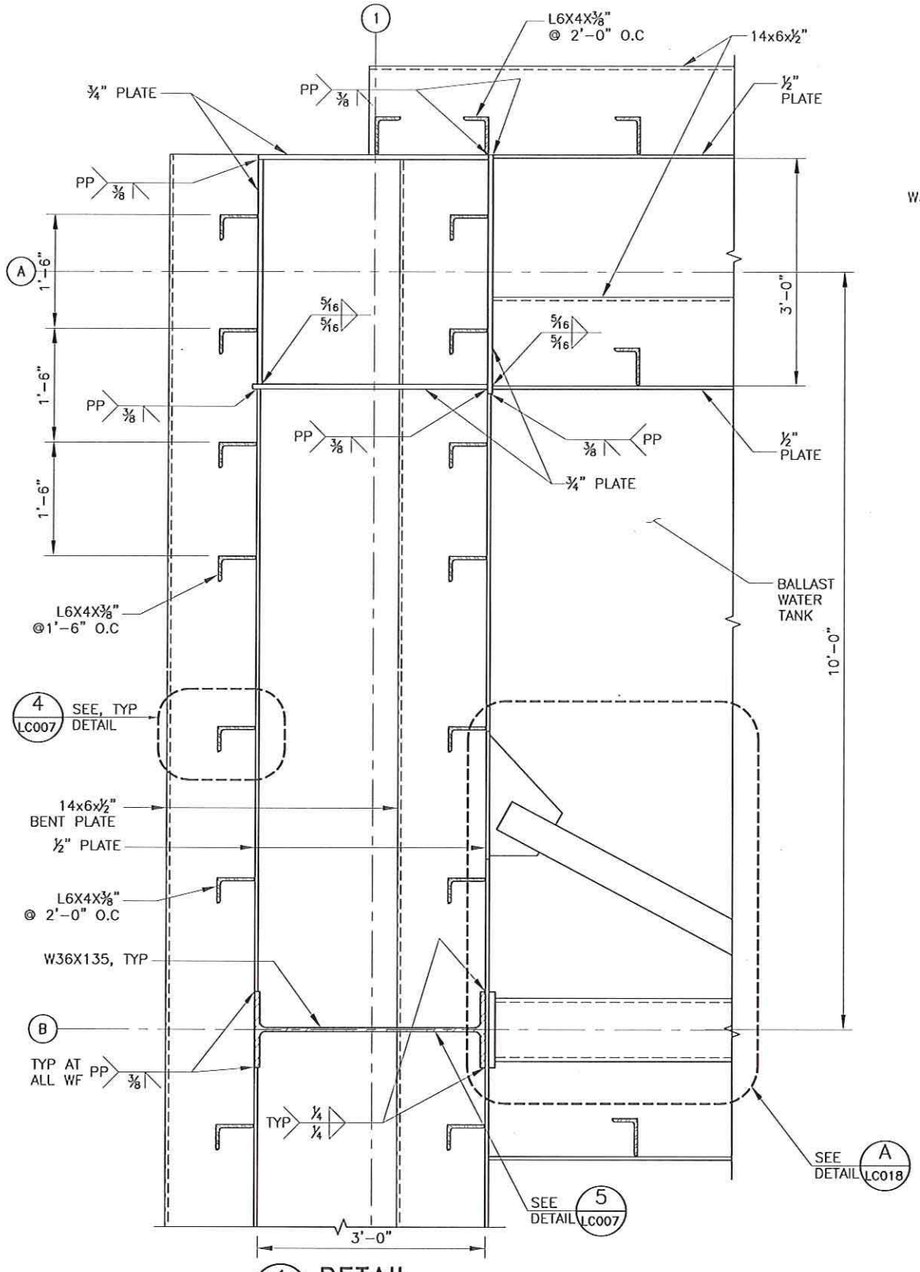

1 LC003 DETAIL
SCALE: 1/4 = 1'-0"

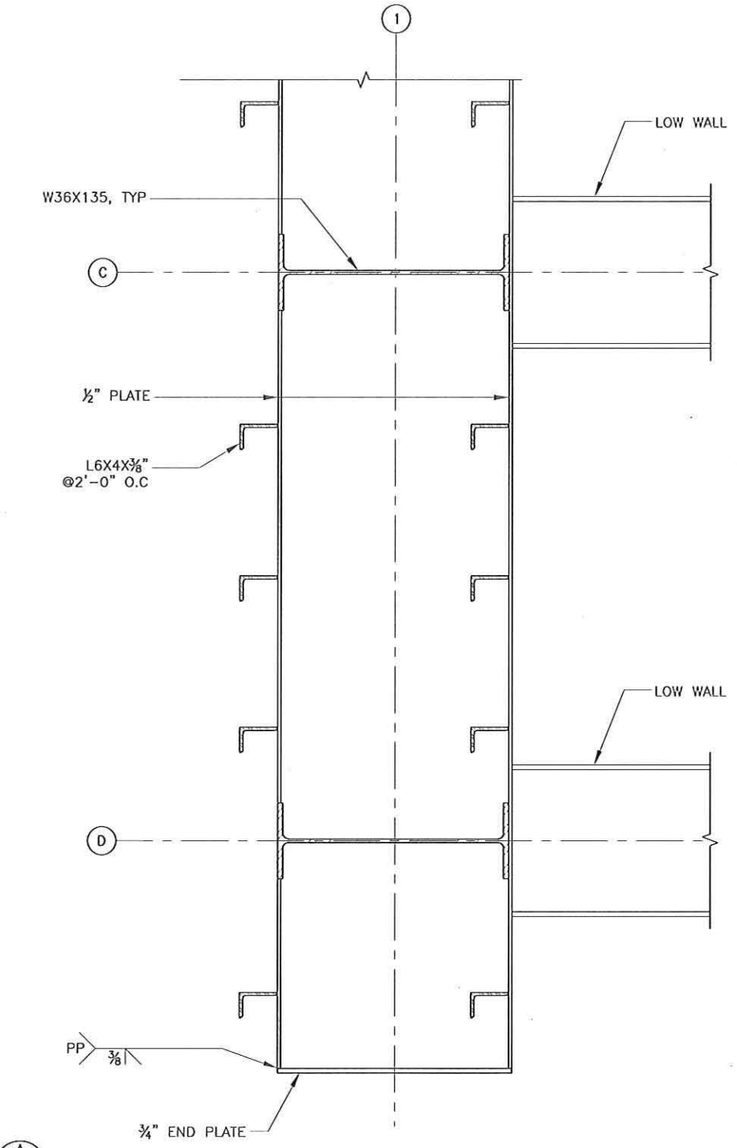

2 LC003 DETAIL
SCALE: 1/4 = 1'-0"

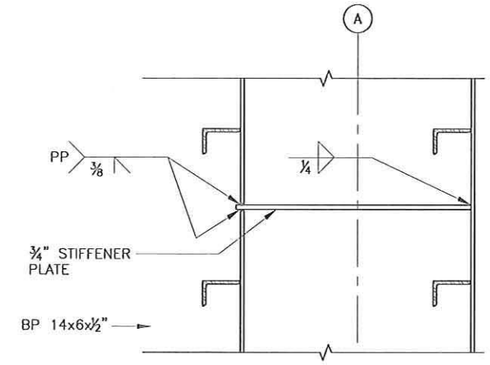

3 LC003 DETAIL
SCALE: 1/4" = 1'-0"

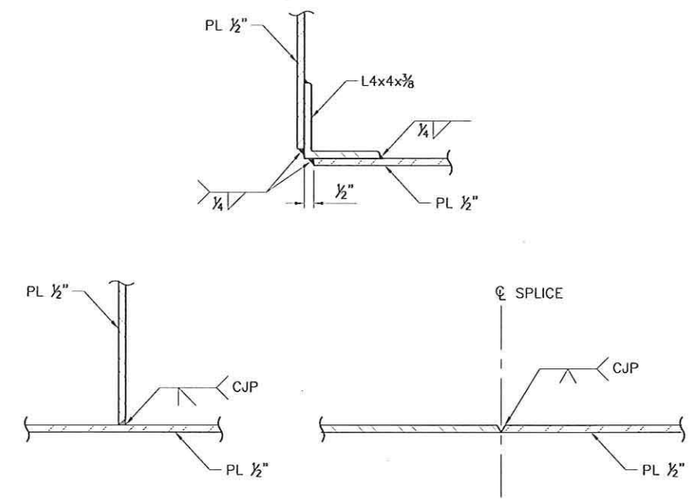

4 – PLATE DETAILS
SCALE: 1 1/2" = 1'-0"

Contract No.: 0080066
Change Order No.: 108
Page 23 of 105

Rev.	Date	Description of Revision	Designed	Drawn	Checked

DESIGNED BY	CHECKED BY	DATE
SY	WOM	01/25/13
DRAWN BY	PLOT SCALE	PROJECT NUMBER
JUSA		
SCE	PLOT DATE	FILE NAME
ANSI B	22-May-13	LC 008.DWG

THIS DRAWING AND THE INFORMATION CONTAINED HEREIN ARE THE PROPERTY OF BEN C. GERWICK, INC. AND MAY NOT BE REPRODUCED, DISTRIBUTED, MODIFIED, REPOSTED OR OTHERWISE USED WITHOUT THE PERMISSION OF BCG INC.

SAMUEL X. TAO, STATE OF WASHINGTON, 46791, REGISTERED PROFESSIONAL ENGINEER
5/23/2013

Washington State Department of Transportation

Kiewit/General/Manson A Joint Venture

BEN C. GERWICK, INC. A CH2M Company

PROJECT NAME: SR 520 COFFERDAM

DRAWING TITLE: TYPICAL FRAMING DETAILS 1

Sheet No.: LC 008

Sheet of

FILE LOCATION: P:\2012\2012-009\DRWG\CONTRACT\MPR\D_LARGE CONTRACT\DRAWDWG\LC 008.DWG DATE: 5/22/2013 4:46:20 PM DRAFTSPERSON: JULIUS MACNILLO

Contract No.: 0080de
Change Order No.: 108
Page 24 of 105

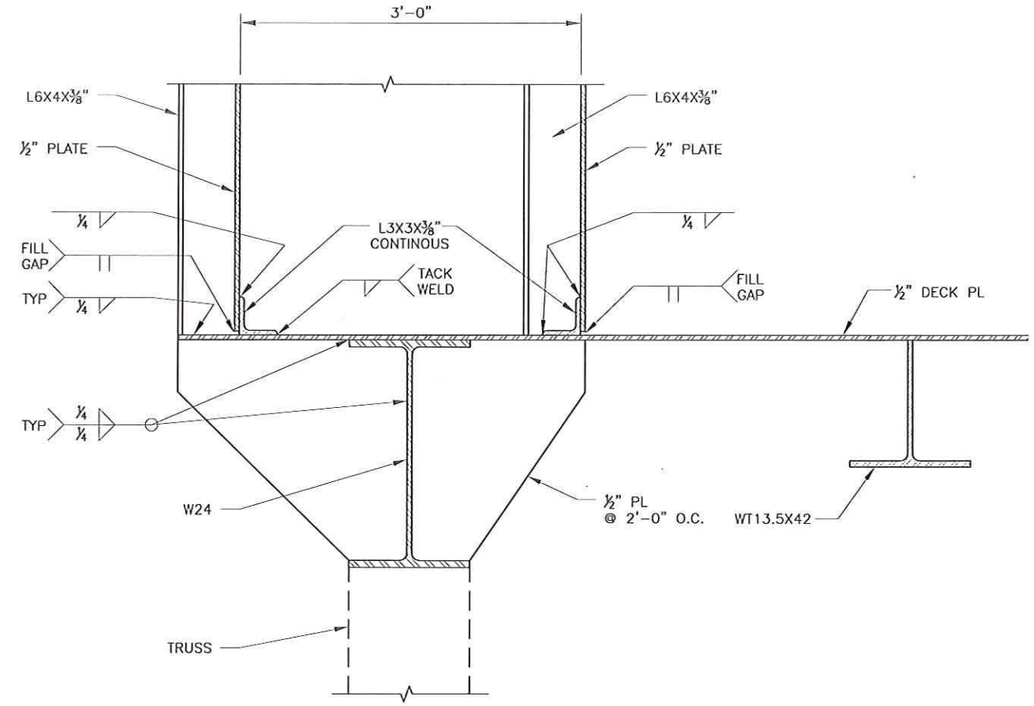

A SECTION
LC002 SCALE: 3/4" = 1'-0"

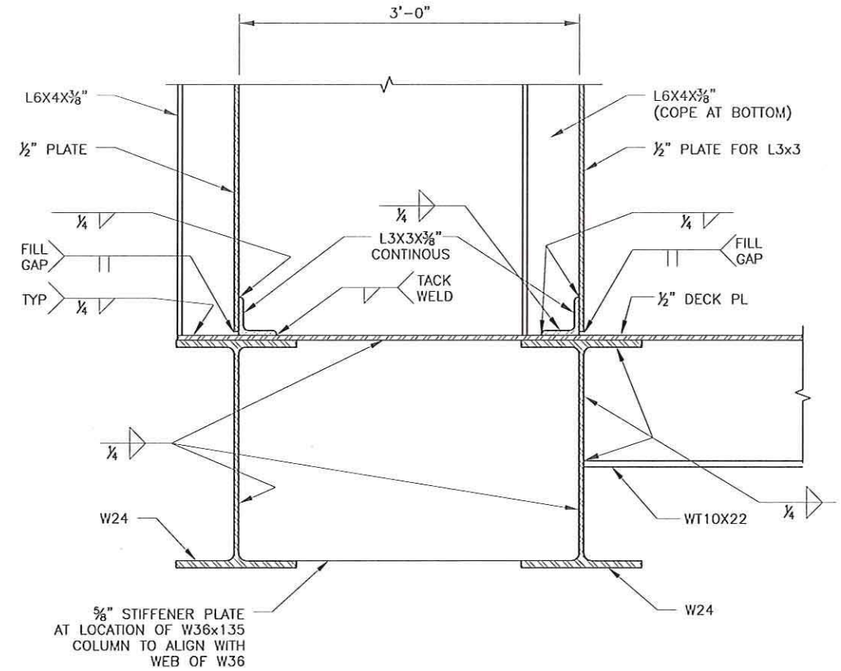

B SECTION
LC002 SCALE: 3/4" = 1'-0"

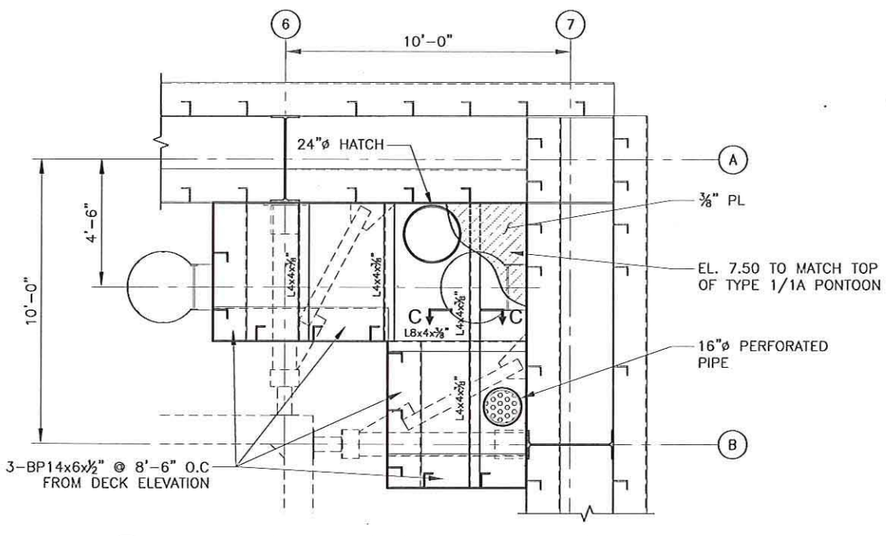

1 FRAMING PLAN AT TOP OF BALLAST TANK
LC003 & LC030 SCALE: 3/16" = 1'-0"

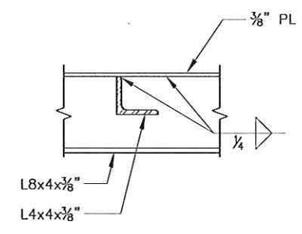

C SECTION
- SCALE: 3/4" = 1'-0"

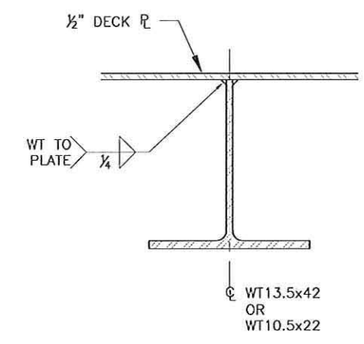

2 TYPICAL WT TO DECK PLATE CONNECTION
LC002 SCALE: 1" = 1'-0"

Rev.	Date	Description of Revision	Designed	Drawn	Checked

DESIGNED BY	CHECKED BY	DATE
SY	WOM	01/28/13
DRAWN BY	PLOT SCALE	PROJECT NUMBER
JUSA		
SIZE	PLOT DATE	FILE NAME
ANSI B	22-May-13	LC 009.DWG

THIS DRAWING AND THE INFORMATION CONTAINED HEREIN ARE THE PROPERTY OF BEN C. GERWICK, INC. AND MAY NOT BE REPRODUCED, DISTRIBUTED, MODIFIED, REPOSITED, OR OTHERWISE USED WITHOUT THE PERMISSION OF BCG INC.

SAMUEL X YAO
STATE OF WASHINGTON
36791
REGISTERED PROFESSIONAL ENGINEER
5/23/2013

Washington State Department of Transportation
KGM Klewit/General Manson A Joint Venture
BEN C. GERWICK, INC. A CCM Company

PROJECT NAME: SR 520 COFFERDAM
DRAWING TITLE: FRAMING SECTIONS AND DETAILS
Sheet No. LC 009
Sheet of

FILE LOCATION: P:\2012\2012-50\INDWG\GSTAMP\D_LARGE COPY1.HDANI\DWGLC 009.DWG DATE: 5/22/2013 4:46:34 PM DRAFTSPERSON: JULIUS MACNILLO

Contract No.: 0080166
Change Order No.: 108
Page 25 of 105

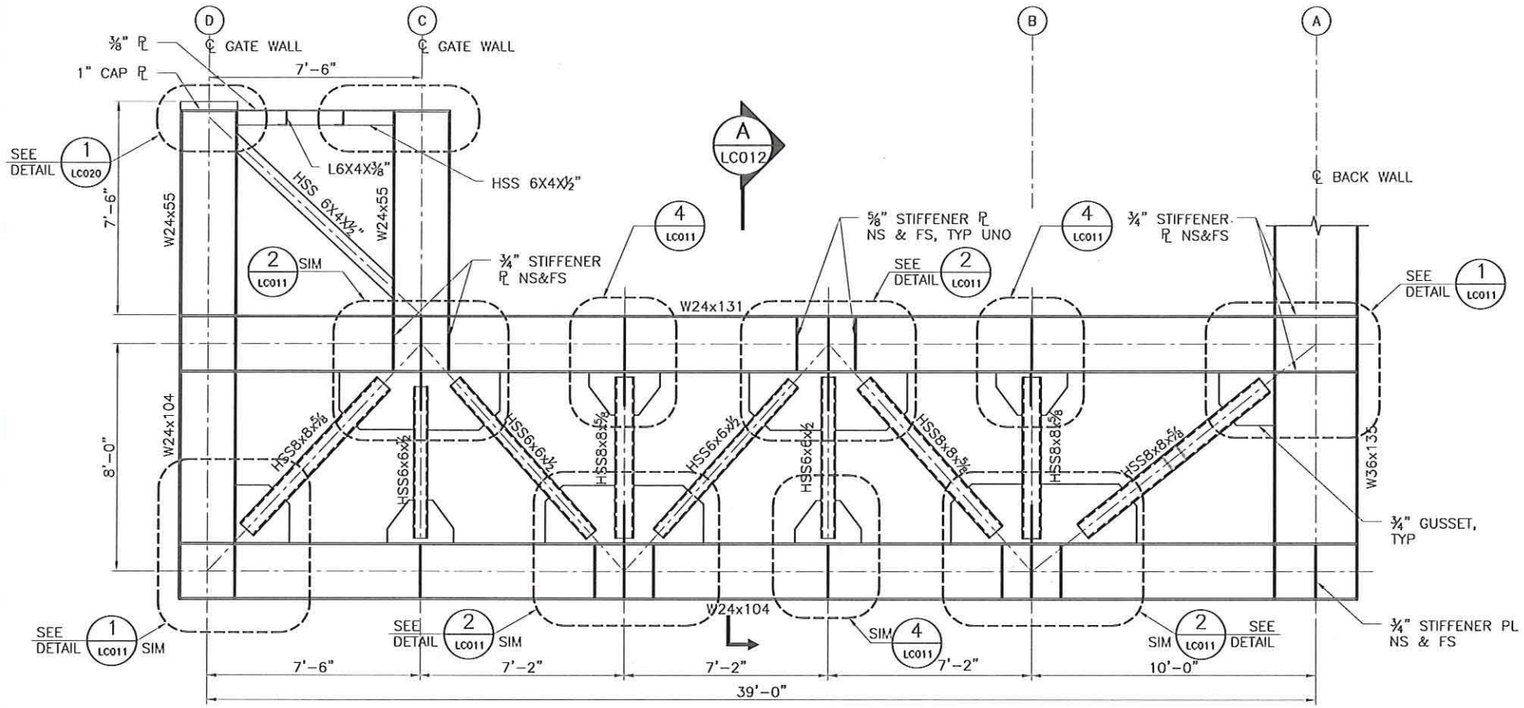

B LC002 TRANSVERSE TRUSS 3 ELEVATION

SCALE: 3/16" = 1'-0"

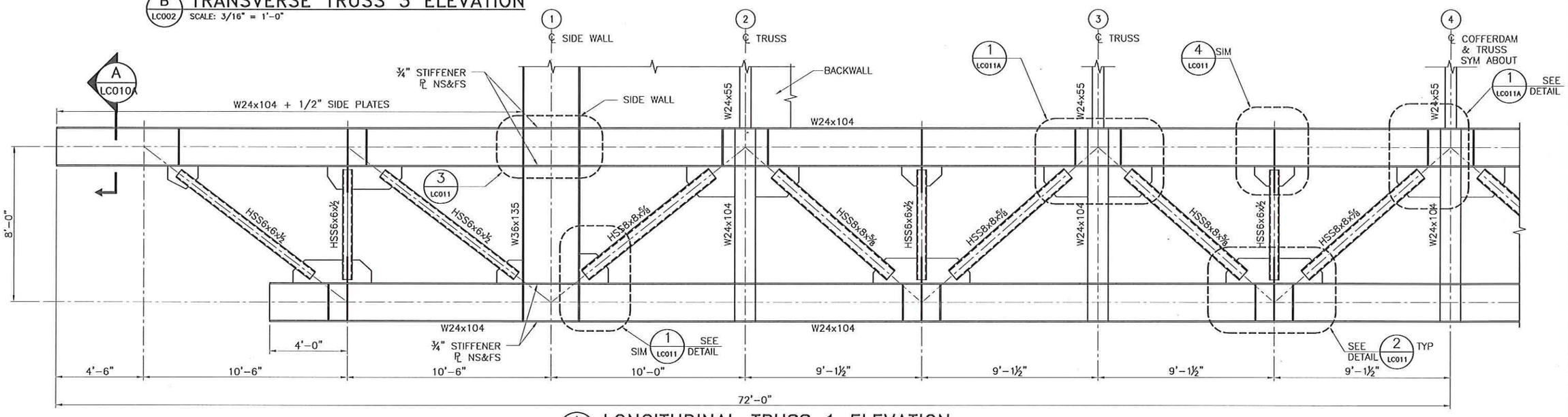

A LC002 LONGITUDINAL TRUSS 1 ELEVATION

SCALE: 3/16" = 1'-0"

Rev.	Date	Description of Revision	Designed	Drawn	Checked

DESIGNED BY	CHECKED BY	DATE
SY	WOM	01/25/13
DRAWN BY	PLOT SCALE	PROJECT NUMBER
NOF		
SIZE	PLOT DATE	FILE NAME
ANSI B	22-May-13	LC 010.DWG

THIS DRAWING AND THE INFORMATION CONTAINED HEREIN ARE THE PROPERTY OF BENG, GERWICK, INC. AND MAY NOT BE REPRODUCED, DISTRIBUTED, MODIFIED, REPORTED OR OTHERWISE USED WITHOUT THE PERMISSION OF BGI INC.

SAMUEL X. YAO — STATE OF WASHINGTON — 46791 — REGISTERED PROFESSIONAL ENGINEER — 5/23/2013

Washington State Department of Transportation

Kiewit/General/Manson A Joint Venture

BEN C. GERWICK, INC. A CH2M Company

PROJECT NAME: SR 520 COFFERDAM

DRAWING TITLE: TRANSVERSE & LONGITUDINAL TRUSS ELEVATION

Sheet No. LC 010

Sheet of

FILE LOCATION: P:\0120120-009\DWG\STAMPED_LARGE COFFERDAMS\CALC010.DWG DATE: 5/22/2013 4:49:36 PM DRAFTSPERSON: JULIUS SACNILLO

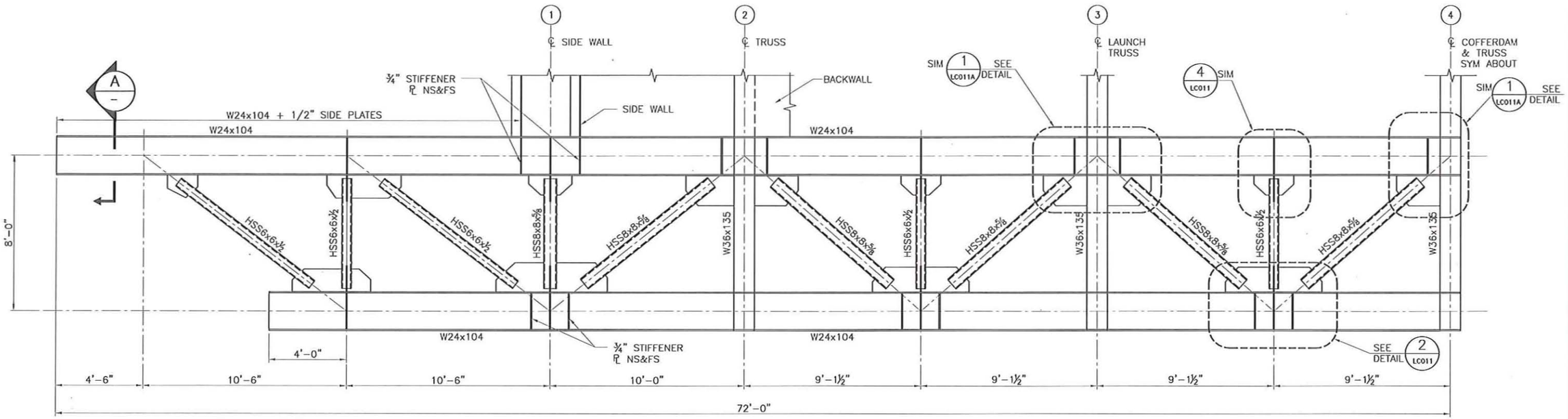

C LC002 LONGITUDINAL TRUSS 2 ELEVATION
SCALE: 3/16" = 1'-0"

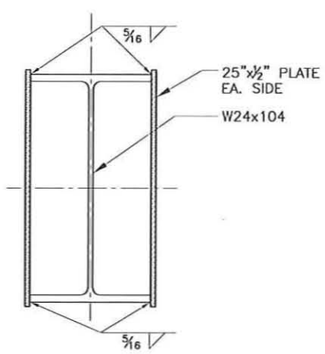

A – SECTION
SCALE: 3/4" = 1'-0"

Contract No.: 0080066
Change Order No.: 108
Page 26 of 105

Rev.	Date	Description of Revision	Designed	Drawn	Checked

DESIGNED BY	CHECKED BY	DATE
SY	WCM	01/25/13
DRAWN BY	PLOT SCALE	PROJECT NUMBER
NOF		
SCE	PLOT DATE	FILE NAME
ANSI B	22-May-13	LC 010A.DWG

THIS DRAWING AND THE INFORMATION CONTAINED HEREIN ARE THE PROPERTY OF BEN C. GERWICK, INC. AND MAY NOT BE REPRODUCED, DISTRIBUTED, MODIFIED, REPORTED, OR OTHERWISE USED WITHOUT THE PERMISSION OF BCG INC.

SAMUEL X. YAO STATE OF WASHINGTON 46791 REGISTERED PROFESSIONAL ENGINEER 5/23/2013

Washington State Department of Transportation

Kiewit/General/Manson A Joint Venture

BEN C. GERWICK, INC. A CH2M Company

PROJECT NAME: SR 520 COFFERDAM

DRAWING TITLE: TRANSVERSE & LONGITUDINAL TRUSS ELEVATION

Sheet No. LC 010A

Sheet of

TILE LOCATION: P:\0012\2012-0\0\DRAWINGS\TAMPED_LARGE\COFFERDAM\DWGS\LC010A.DWG DATE: 5/22/2013 4:46:26 PM DRAWTSPURTSON: JULIUS BACINELLO

Contract No.: 0080066
Change Order No.: 108
Page 27 of 105

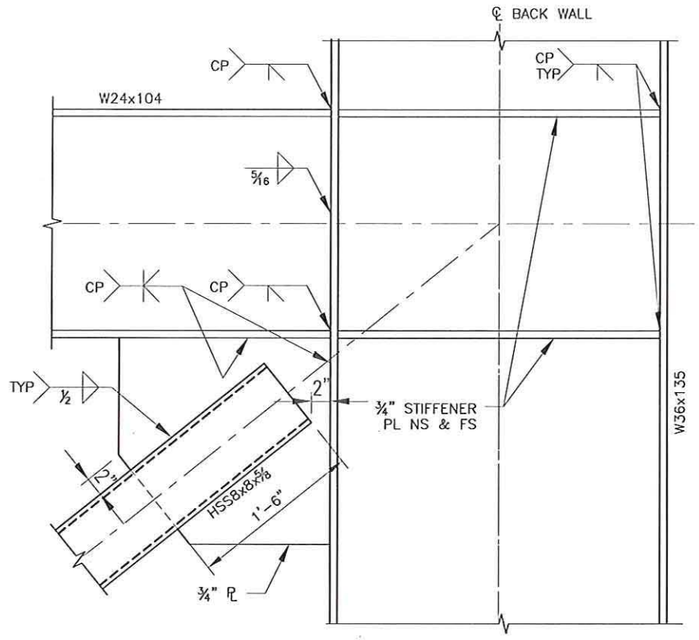

1 LC010 DETAIL – TRUSS CONNECTION
SCALE: 3/4" = 1'-0"

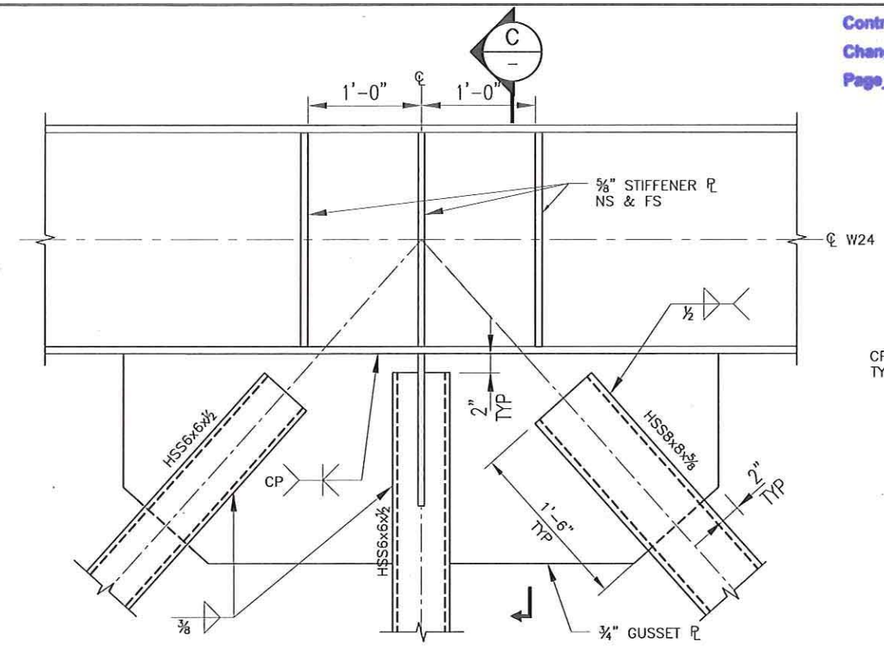

2 LC010 DETAIL – TRUSS CONNECTION
SCALE: 3/4" = 1'-0"

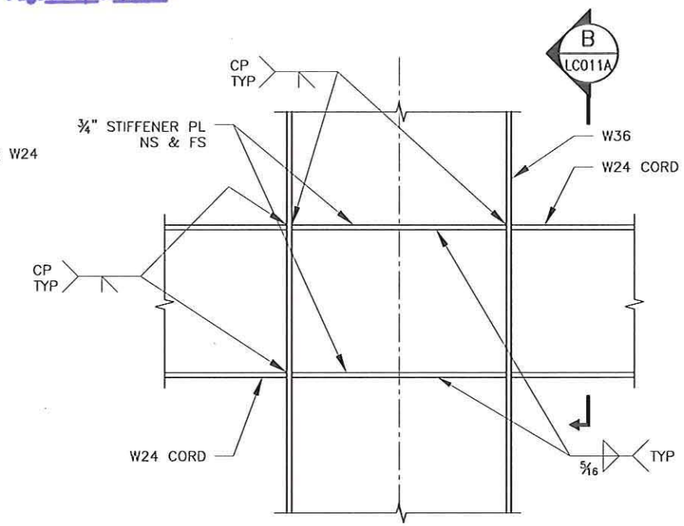

3 LC010 DETAIL
SCALE: 1/2" = 1'-0"

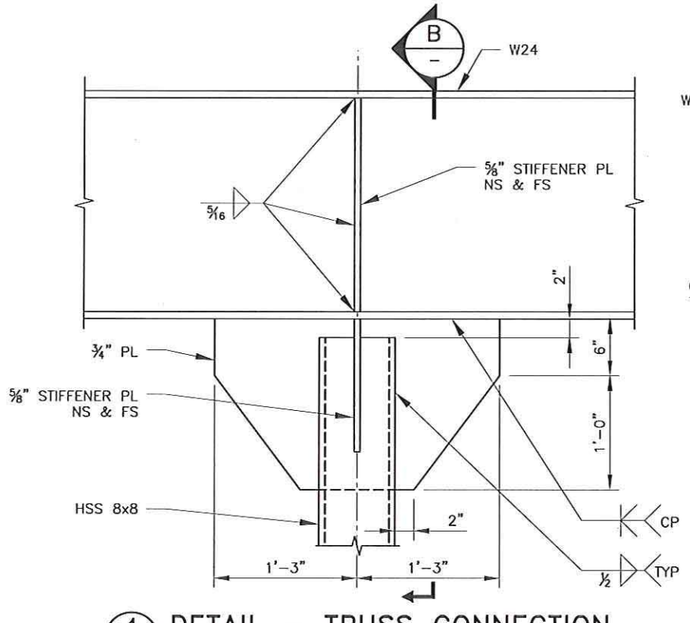

4 LC010 DETAIL – TRUSS CONNECTION
SCALE: 3/4" = 1'-0"

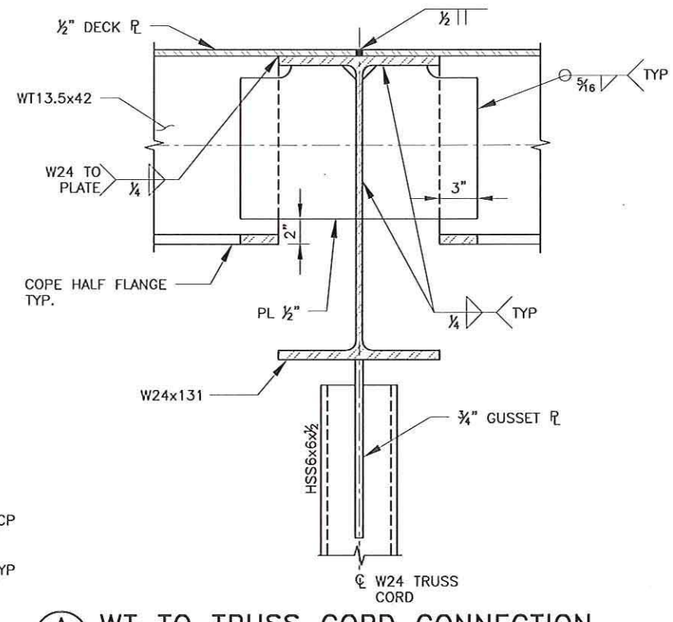

A LC002 WT TO TRUSS CORD CONNECTION
SCALE: 1" = 1'-0"

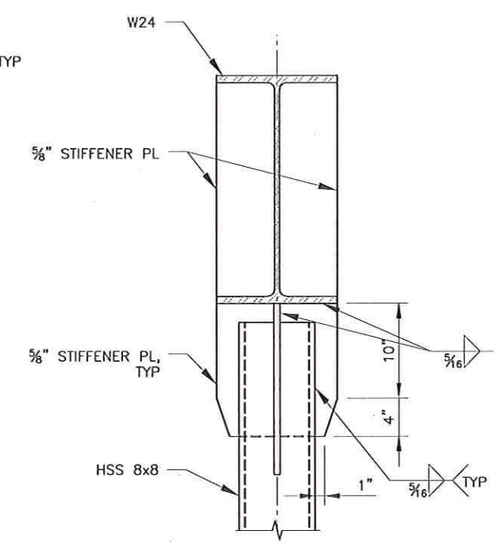

B – SECTION
SCALE: 3/4" = 1'-0"

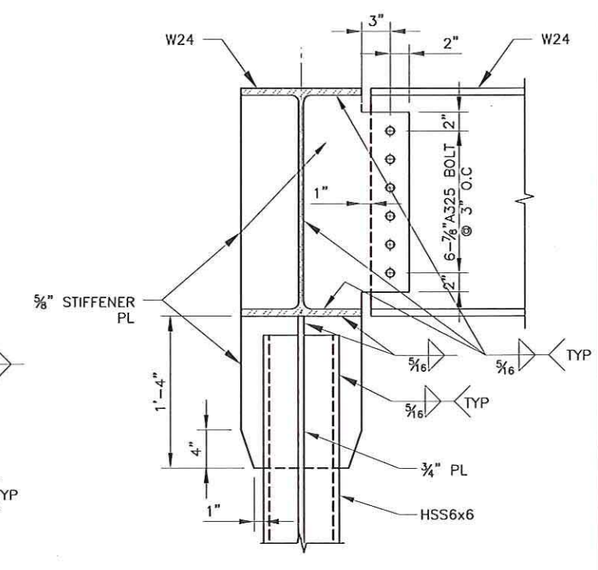

C – SECTION
SCALE: 3/4" = 1'-0"

Rev.	Date	Description of Revision	Designed	Drawn	Checked

DESIGNED BY	CHECKED BY	DATE
SY	WCM	01/25/13
DRAWN BY	PLOT SCALE	PROJECT NUMBER
JUSA		
SIZE	PLOT DATE	FILE NAME
ANSI B	22-May-13	LC011.DWG

THIS DRAWING AND THE INFORMATION CONTAINED HEREIN ARE THE PROPERTY OF BEN C. GERWICK, INC. AND MAY NOT BE REPRODUCED, DISTRIBUTED, MODIFIED REPORTED OR OTHERWISE USED WITHOUT THE PERMISSION OF BCG INC.

SAMUEL X. YAO
STATE OF WASHINGTON
46791
REGISTERED PROFESSIONAL ENGINEER
5/23/2013

Washington State Department of Transportation

Kiewit/General/Manson A Joint Venture

BEN C. GERWICK, INC. A KGM Company

PROJECT NAME
SR 520 COFFERDAM

DRAWING TITLE
TRUSS CONNECTION AND DETAILS

Sheet No.
LC 011
Sheet of

FILE LOCATION: P:\2013\2013-0019\DWG\STAMPED_LARGE COFFERDAM\DWG\LC011.DWG DATE: 5/22/2013 4:46:41 PM DRAFTSPERSON: JULIUS BACINELLO

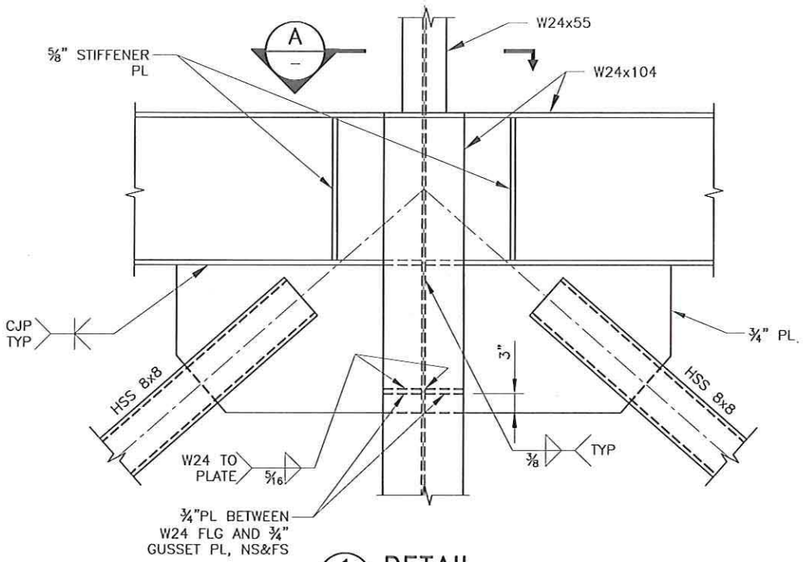

1 LC010 **DETAIL**
SCALE: 1/2" = 1'-0"

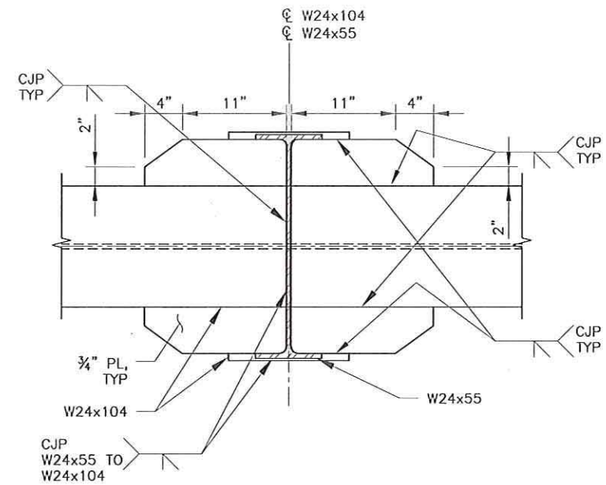

A – **SECTION**
SCALE: 3/4" = 1'-0"

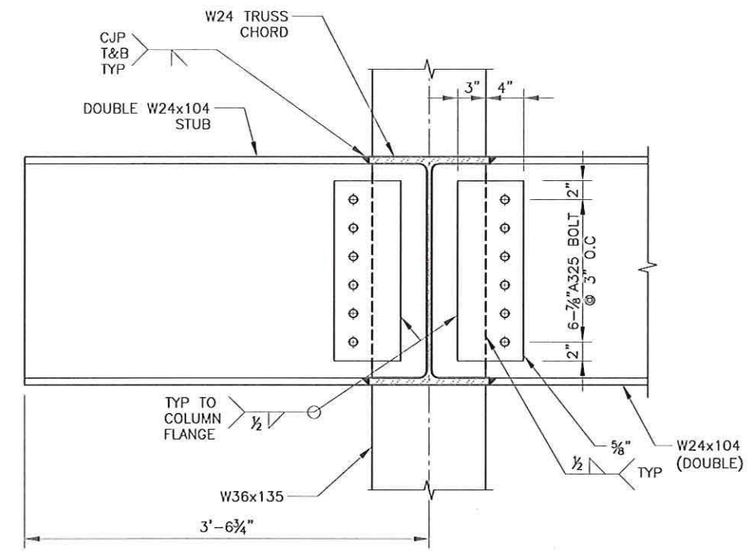

B LC011 **SECTION**
SCALE: 3/4" = 1'-0"

Contract No.: 008066
Change Order No.: 108
Page 28 of 105

Rev.	Date	Description of Revision	Designed	Drawn	Checked

DESIGNED BY	CHECKED BY	DATE
SY	WOM	01/25/13
DRAWN BY	PLOT SCALE	PROJECT NUMBER
JUSA		
SCE	PLOT DATE	FILE NAME
ANSI B	22-May-13	LC 011A.DWG

THIS DRAWING AND THE INFORMATION CONTAINED HEREIN ARE THE PROPERTY OF BEN C. GERWICK, INC. AND MAY NOT BE REPRODUCED OR PUBLISHED, MODIFIED, REPOSTED OR OTHERWISE USED WITHOUT THE PERMISSION OF BCG INC.

SAMUEL X. YAO — STATE OF WASHINGTON — 46703 — REGISTERED PROFESSIONAL ENGINEER — 5/23/2013

Washington State Department of Transportation

Kiewit/General Manson A Joint Venture

BEN C. GERWICK, INC. A GDYN Company

PROJECT NAME: SR 520 COFFERDAM

DRAWING TITLE: TRUSS CONNECTION DETAILS

Sheet No.: LC 011A

Sheet of

FILE LOCATION: P:\2012\12-0\ROD\PROJECT\AMPRD_LARGE_COFFER\DRAWING\LC 011A.DWG DATE: 5/22/2013 4:46:43 PM SYAK TSUPERVISOR: JULIUS BACINELLO

Contract No.: 008066
Change Order No.: 108
Page 29 of 105

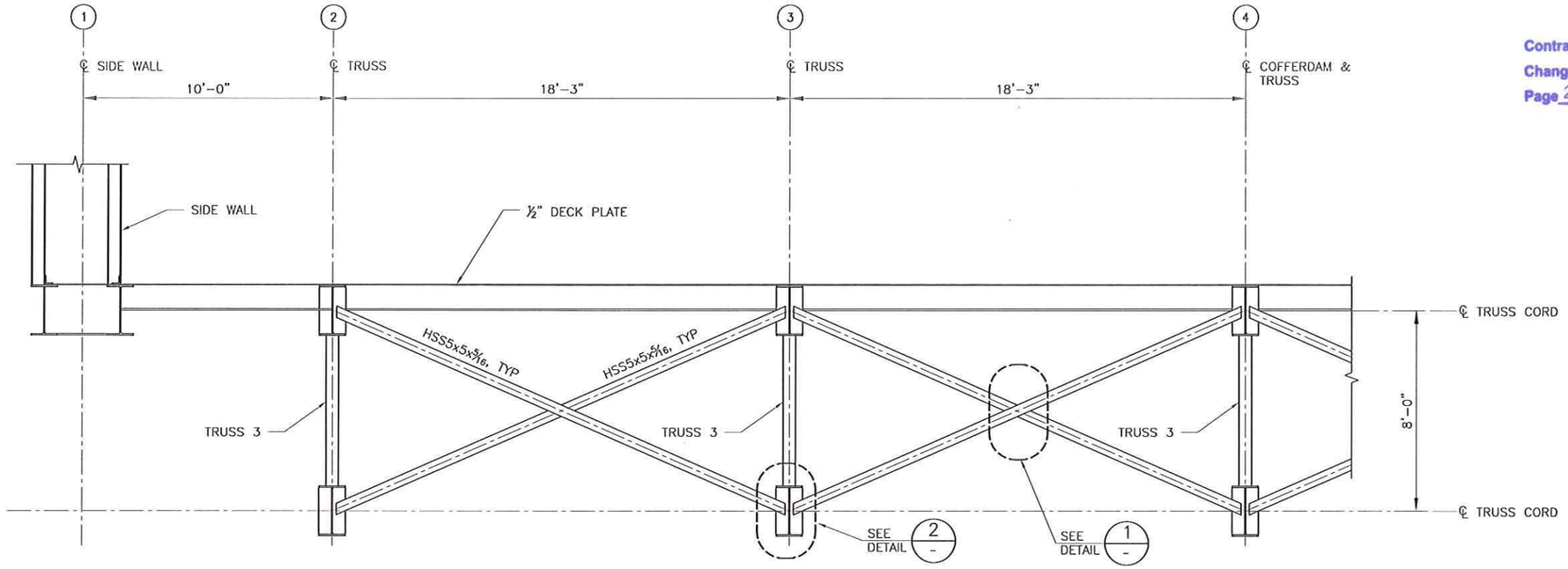

A/LC002 SECTION A – X BRACE DETAIL
SCALE: 3/16 = 1'-0"

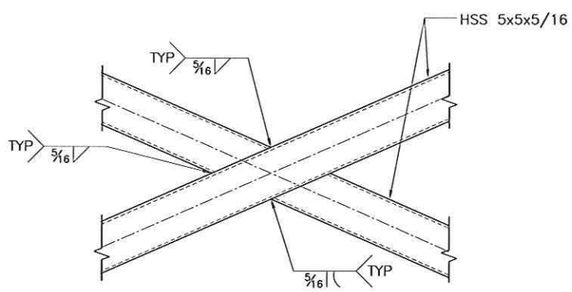

1/- DETAIL–1
SCALE: 3/4 = 1'-0"

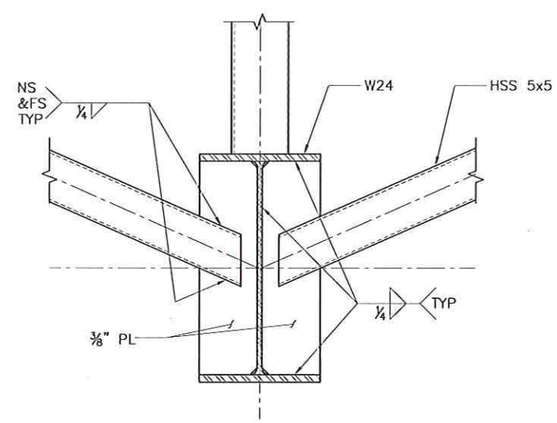

2/- DETAIL–2
SCALE: 3/4 = 1'-0"

Rev.	Date	Description of Revision	Designed	Drawn	Checked

DESIGNED BY	CHECKED BY	DATE
SY	WCM	01/25/13
DRAWN BY	PLOT SCALE	PROJECT NUMBER
JUSA		
SIZE	PLOT DATE	FILE NAME
ANSI B	22-May-13	LC 012.DWG

THIS DRAWING AND THE INFORMATION CONTAINED HEREIN ARE THE PROPERTY OF BEN C. GERWICK, INC. AND MAY NOT BE REPRODUCED, DISTRIBUTED, MODIFIED, REPOSITED OR OTHERWISE USED WITHOUT THE PERMISSION OF BCG INC.

SAMUEL X. YAO
STATE OF WASHINGTON
36791
REGISTERED PROFESSIONAL ENGINEER
5/23/2013

Washington State Department of Transportation
Kiewit/General/Manson A Joint Venture
BEN C. GERWICK, INC. A CCM1 Company

PROJECT NAME: SR 520 COFFERDAM
DRAWING TITLE: SECTION A - X BRACE DETAIL

Sheet No. LC 012
Sheet of

FILE LOCATION: P:\2012\2012-36\DWG\DIST\APPLD_LARGE COFFERDAM\DWG\LC 012.DWG DATE: 5/22/2013 4:46:45 PM DRAFTSPERSON: JULIUS SACRILLO

Contract No.: 008066
Change Order No.: 108
Page 30 of 105

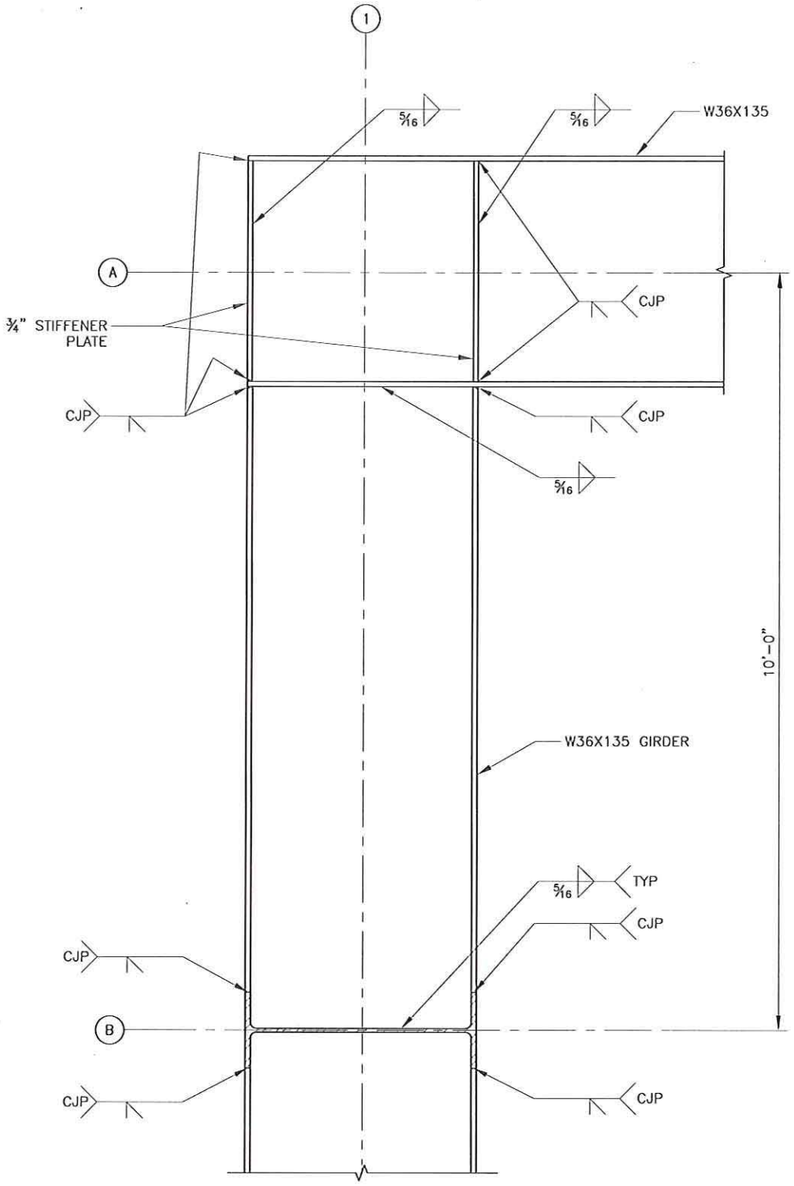

1 LC003 DETAIL AT COLUMN GIRDER INTERSECTION
SCALE: 1/2 = 1'-0"

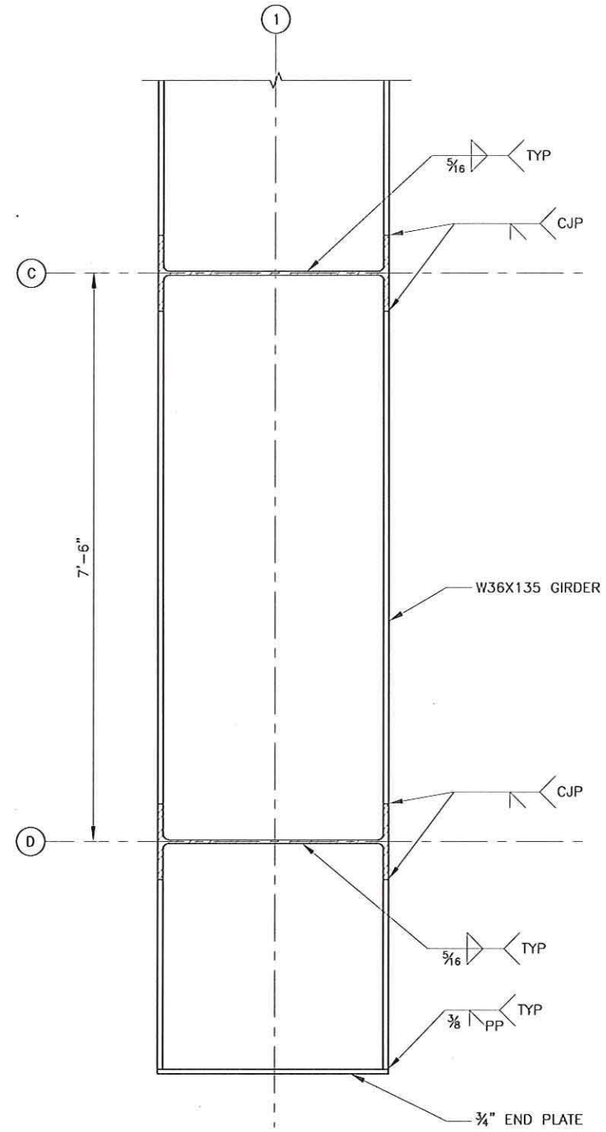

2 LC003 DETAIL AT COLUMN GIRDER INTERSECTION
SCALE: 1/2 = 1'-0"

Rev.	Date	Description of Revision	Designed	Drawn	Checked

DESIGNED BY	CHECKED BY	DATE
SY	WOM	01/25/13
DRAWN BY	PLOT SCALE	PROJECT NUMBER
JUSA		
SCE	PLOT DATE	FILE NAME
ANSI B	22-May-13	LC 013.DWG

THIS DRAWING AND THE INFORMATION CONTAINED HEREIN ARE THE PROPERTY OF BEN C. GERWICK, INC. AND MAY NOT BE REPRODUCED, DISTRIBUTED, MODIFIED, REPOSTED OR OTHERWISE USED WITHOUT THE PERMISSION OF BCG INC.

SAMUEL X. TAO
STATE OF WASHINGTON
REGISTERED PROFESSIONAL ENGINEER
5/23/2013

Washington State Department of Transportation
Kiewit/General Manson A Joint Venture
BEN C. GERWICK, INC. A CCM Company

PROJECT NAME: SR 520 COFFERDAM
DRAWING TITLE: COLUMN GIRDER INTERSECTION DETAIL

Sheet No. LC 013
Sheet of

FILE LOCATION: P:\2012\2013-009\DRWG\STAMP\D_LARGE\COFFERDAM\DWG\LC013.DWG DATE: 5/22/2013 4:46:47 PM DRAFTSPERSON: JULIUS SACRILLO

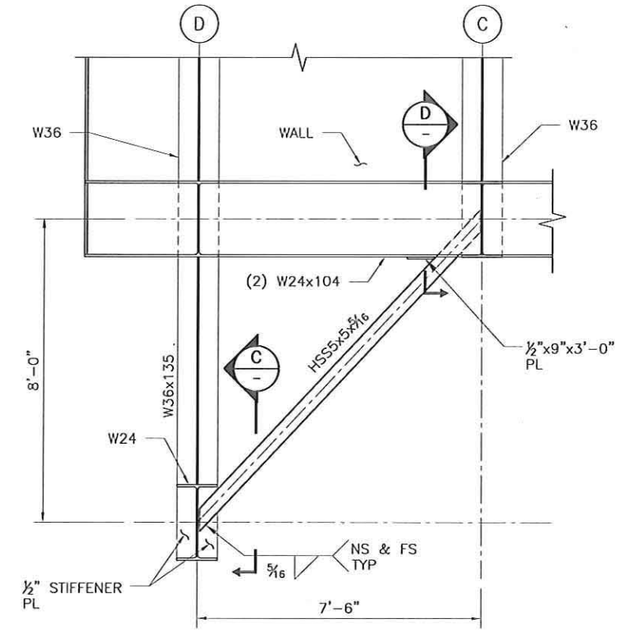

A SECTION
LC002 SCALE: 1/4 = 1'-0"

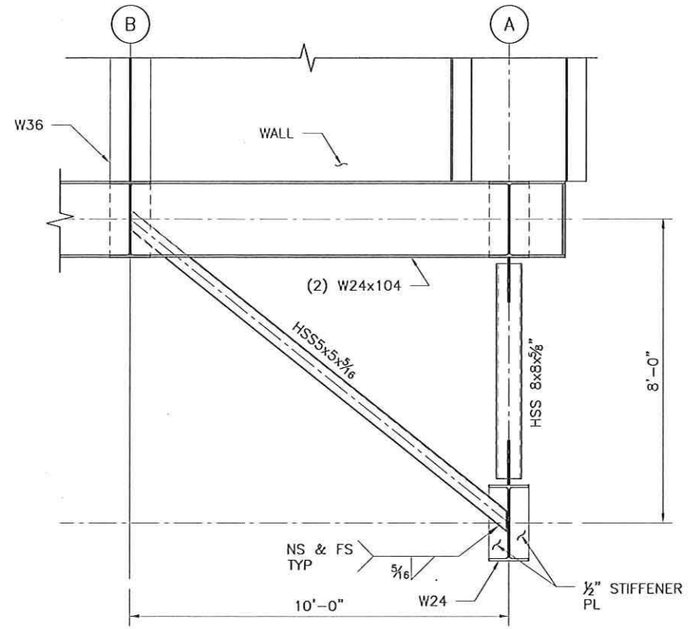

B SECTION
LC002 SCALE: 1/4 = 1'-0"

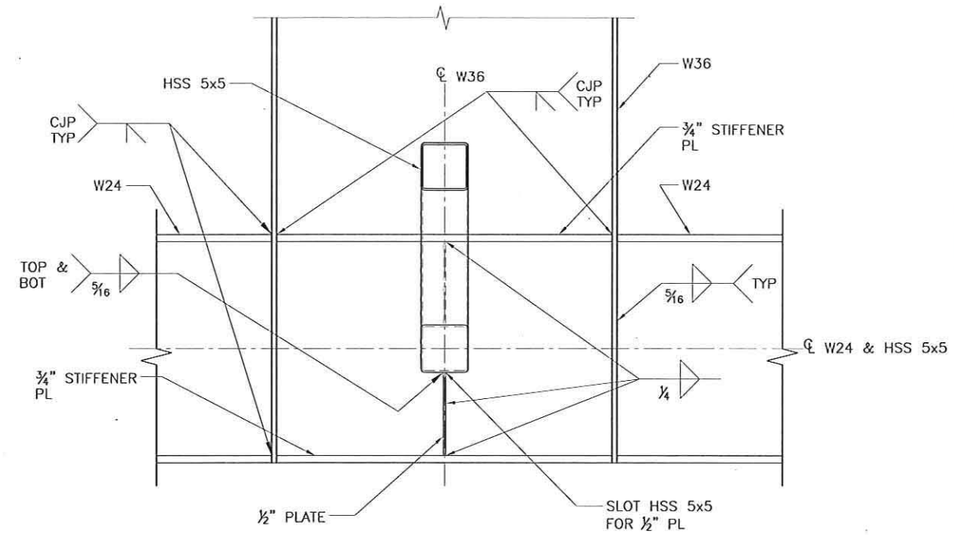

C SECTION
SCALE: 3/4" = 1'-0"

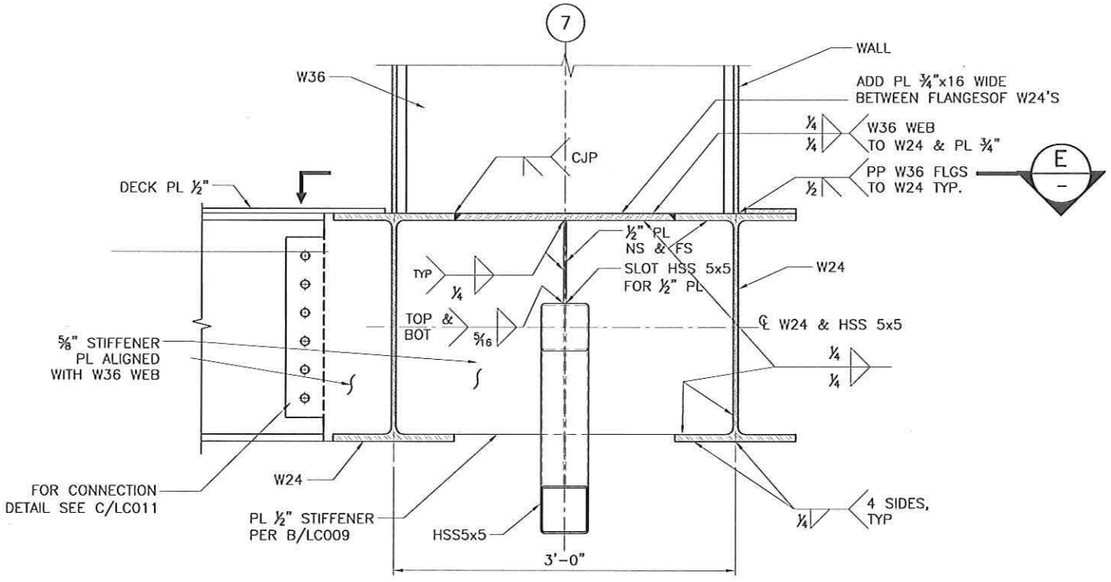

D SECTION
SCALE: 3/4" = 1'-0"

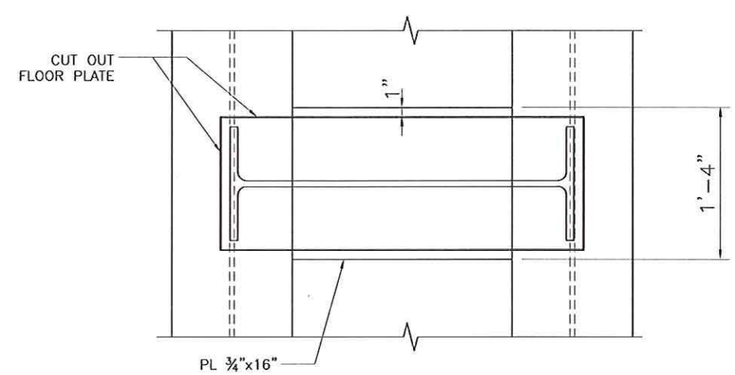

TYPICAL AT ALL W36 COLUMN STARTING
ABOVE THE DECK ELEVATION

E SECTION
SCALE: 3/4 = 1'-0"

Contract No.: 008066
Change Order No.: 108
Page 31 of 105

Rev.	Date	Description of Revision	Designed	Drawn	Checked

DESIGNED BY	CHECKED BY	DATE
SY	WOM	01/25/13
DRAWN BY	PLOT SCALE	PROJECT NUMBER
JUSA		
SIZE	PLOT DATE	FILE NAME
ANSI B	22-May-13	LC 014.DWG

THIS DRAWING AND THE INFORMATION CONTAINED HEREIN ARE THE PROPERTY OF BEN C. GERWICK, INC. AND MAY NOT BE REPRODUCED, DISTRIBUTED, MODIFIED, REPOSITED OR OTHERWISE USED WITHOUT THE PERMISSION OF BCG INC.

SAMUEL X. YAO
STATE OF WASHINGTON
40391
REGISTERED PROFESSIONAL ENGINEER
5/23/2013

Washington State Department of Transportation

Kiewit/General/Manson
A Joint Venture

BEN C. GERWICK, INC.
A CCM Company

PROJECT NAME
SR 520 COFFERDAM

DRAWING TITLE
BRACING DETAIL

Sheet No.
LC 014
Sheet of

FILE LOCATION: P:\2012\2012-009\DWG\TAPPED_LARGE COFFERDAMDWG\LC014.DWG DATE: 5/22/2013 4:49:49 PM DRAFTSPERSON: JULIUS BADRILLO

Contract No.: 0080666
Change Order No.: 108
Page 32 of 105

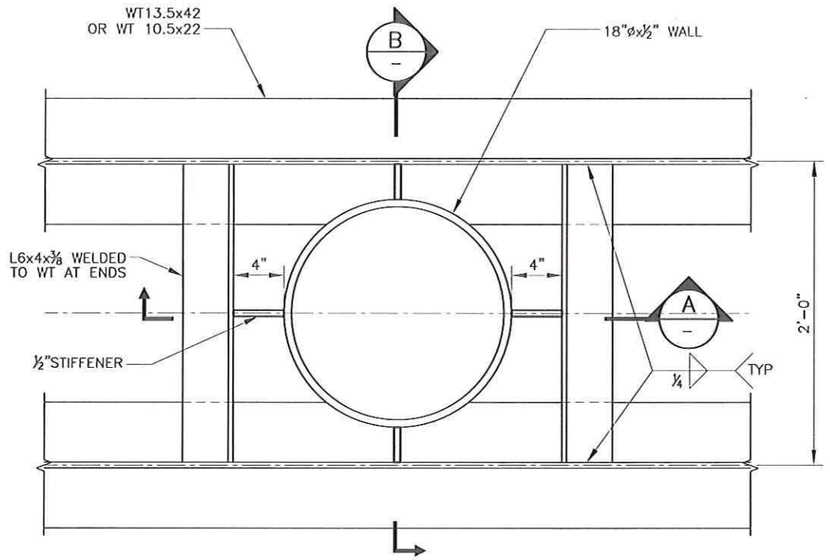

1 LC004 PLAN
SCALE: 1" = 1'-0"

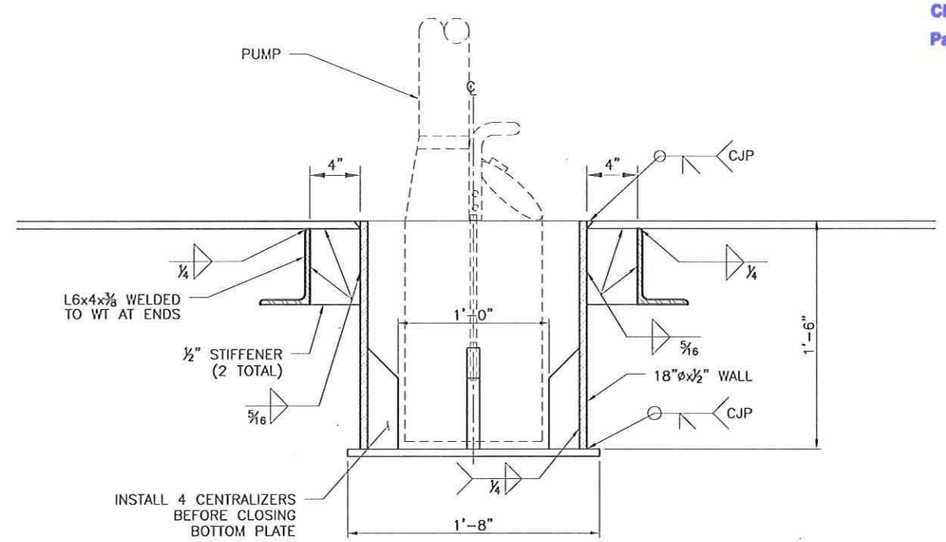

A – SECTION
SCALE: 1" = 1'-0"

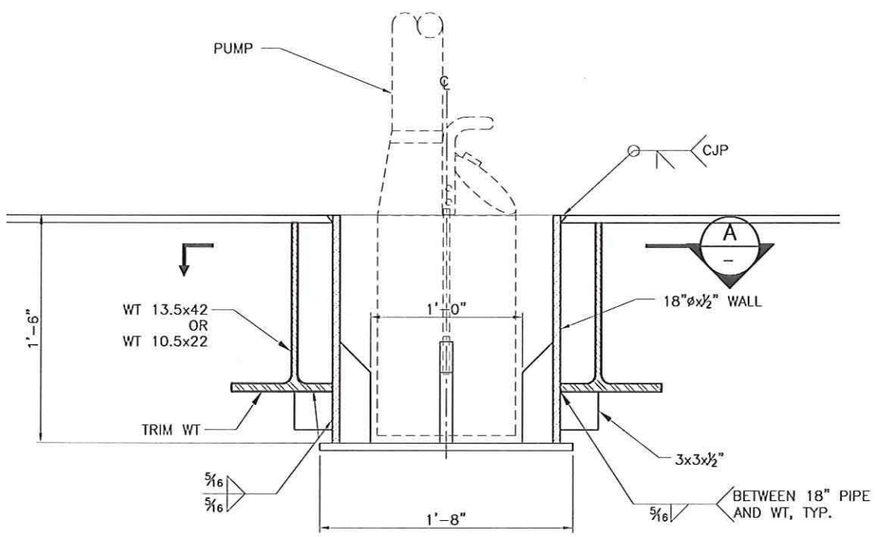

B – PLAN
SCALE: 1" = 1'-0"

Rev.	Date	Description of Revision	Designed	Drawn	Checked

DESIGNED BY	CHECKED BY	DATE
SY	WCM	01/25/13
DRAWN BY	PLOT SCALE	PROJECT NUMBER
JUSA		
SIZE	PLOT DATE	FILE NAME
ANSI B	22-May-13	LC 017.DWG

THIS DRAWING AND THE INFORMATION CONTAINED HEREIN ARE THE PROPERTY OF BEN C. GERWICK, INC., AND MAY NOT BE REPRODUCED, DISTRIBUTED, MODIFIED, REPOSTED OR OTHERWISE USED WITHOUT THE PERMISSION OF BCG INC.

NOT ISSUED FOR CONSTRUCTION

Washington State Department of Transportation

Kiewit/General/Manson A Joint Venture

BEN C. GERWICK, INC. A CCM2 Company

PROJECT NAME
SR 520 COFFERDAM

DRAWING TITLE
SUMPS SECTION AND DETAILS

Sheet No.
LC 017
Sheet of

FILE LOCATION: P:\2012\2012-009\DWG\STAMPED_LARGE COFFERDAM\SHEET LC017.DWG DATE: 5/22/2013 4:46:22 PM DRAFTSPERSON: JULIUS SADINILLO

Contract No.: 008066
Change Order No.: 108
Page 33 of 105

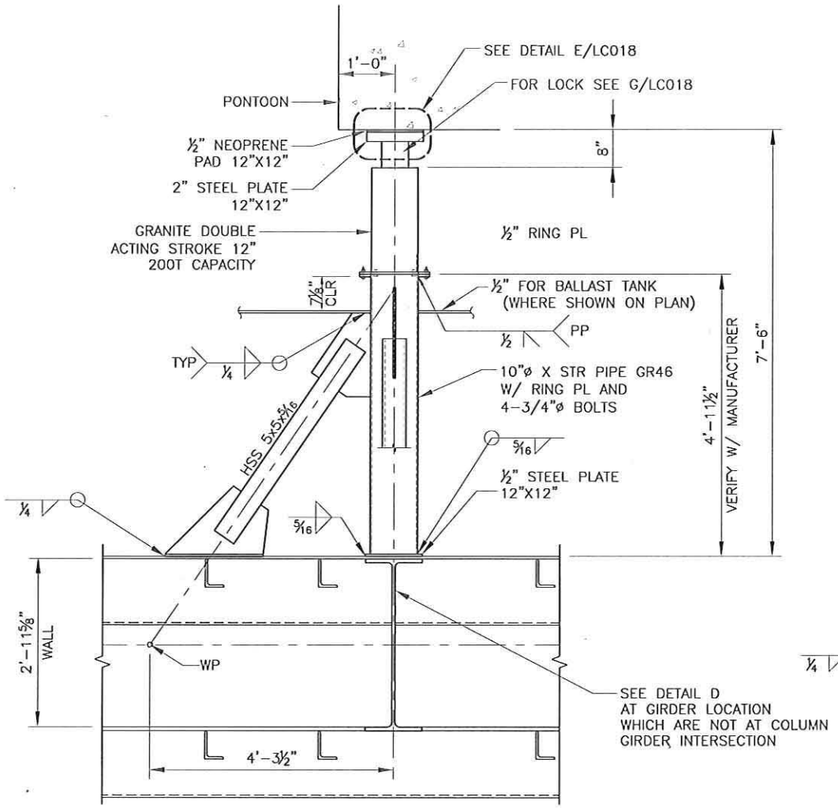

A LC008 LATERAL STRUT DETAIL
SCALE: 3/8 = 1'-0"

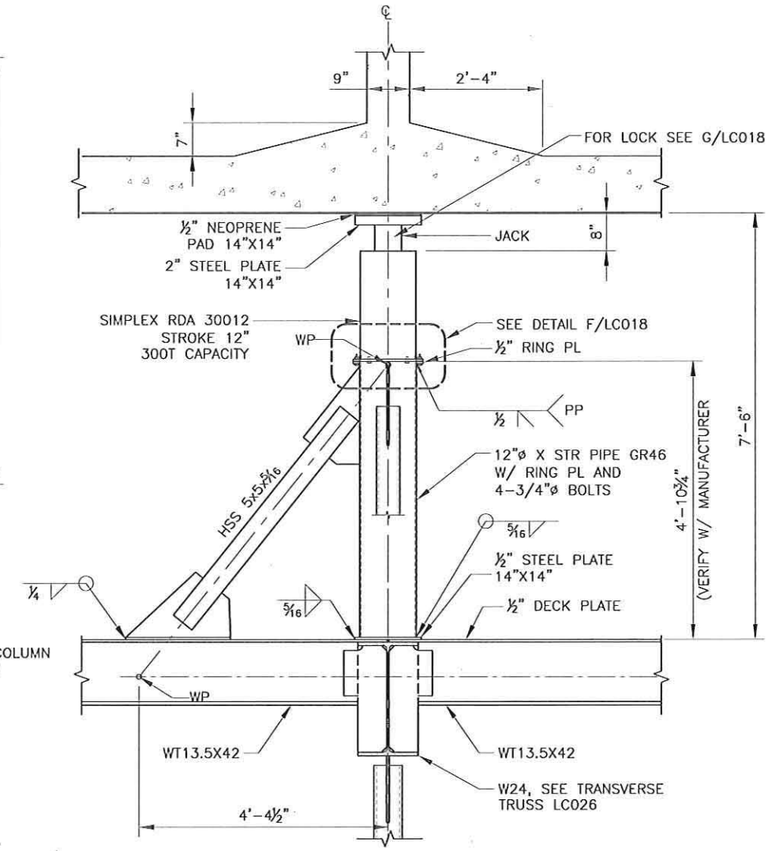

B LC002 VERTICAL STRUT DETAIL
SCALE: 1/4 = 1'-0"

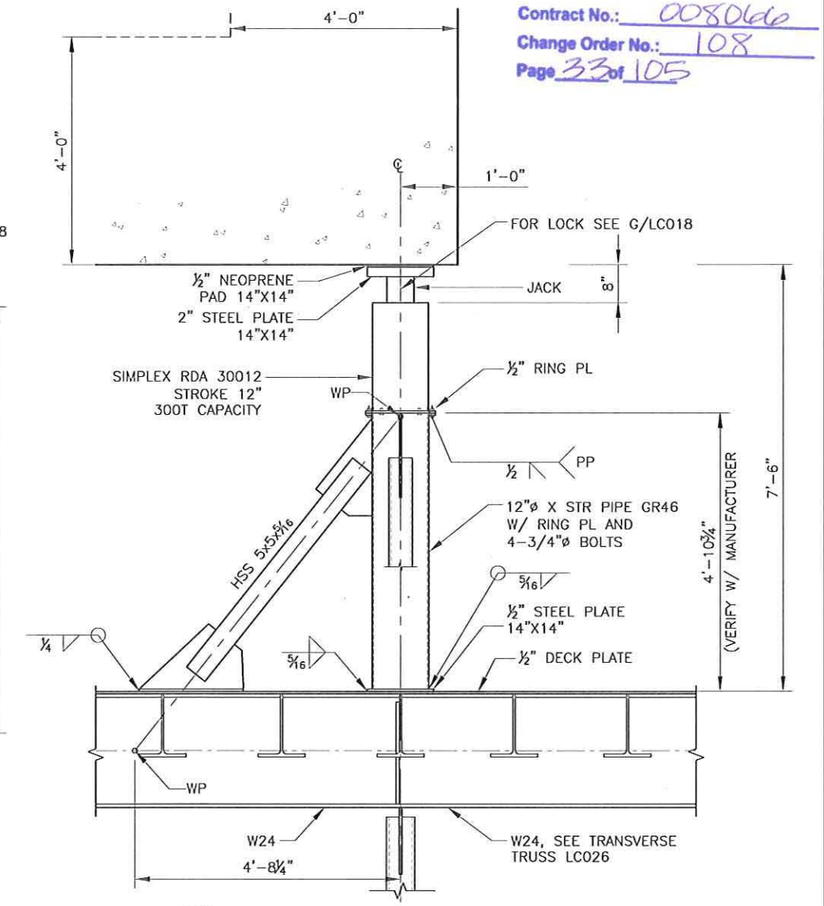

C LC002 VERTICAL STRUT DETAIL
SCALE: 1/4 = 1'-0"

STRUT LOAD CAPACITY TABLE		
# OF STRUTS	LOCATION	CAPACITY
13	VERTICAL	300T
20	HORIZONTAL	200T

1. ALL JACKS TO MEET REQUIREMENTS OF PINE JACK STANDARDS.

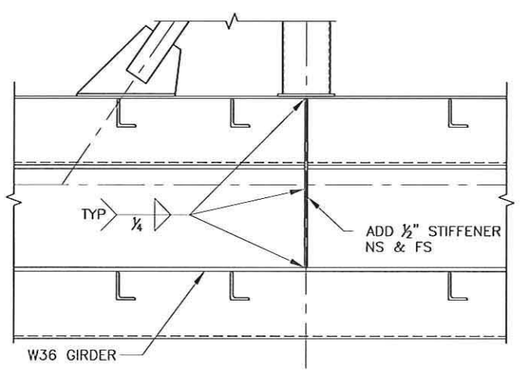

D - DETAIL
SCALE: 3/8 = 1'-0"

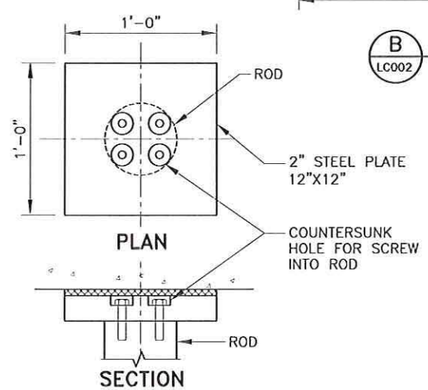

E - DETAIL
SCALE: 1" = 1'-0"

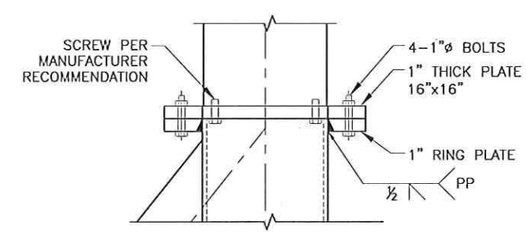

F - DETAIL
SCALE: 1" = 1'-0"

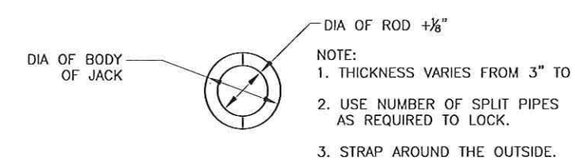

NOTE:
1. THICKNESS VARIES FROM 3" TO ⅛".
2. USE NUMBER OF SPLIT PIPES AS REQUIRED TO LOCK.
3. STRAP AROUND THE OUTSIDE.

G - LOCK FOR JACK
SCALE: 1/2" = 1'-0"

Rev.	Date	Description of Revision	Designed	Drawn	Checked

DESIGNED BY	CHECKED BY	DATE
SY	WCM	01/25/13
DRAWN BY	PLOT SCALE	PROJECT NUMBER
JUSA		
SIZE	PLOT DATE	FILE NAME
ANSI B	22-May-13	LC 018.DWG

THIS DRAWING AND THE INFORMATION CONTAINED HEREIN ARE THE PROPERTY OF BEN C. GERWICK, INC. AND MAY NOT BE REPRODUCED OR DISTRIBUTED, MODIFIED REPUBLISHED OR OTHERWISE USED WITHOUT THE PERMISSION OF BCG INC.

SAMUEL X. YAO — STATE OF WASHINGTON — 36791 — REGISTERED PROFESSIONAL ENGINEER — 5/23/2013

Washington State Department of Transportation

Kiewit/General/Manson A Joint Venture

BEN C. GERWICK, INC. A CCMI Company

PROJECT NAME: SR 520 COFFERDAM

DRAWING TITLE: HYDRAULIC STRUTS DETAIL

Sheet No. LC 018

Sheet of

FILE LOCATION: P:\2012\2012-009\DRWG\STAMP\D_LARGE COFFER\DAMON\LC018.DWG DATE: 5/23/2013 4:48:53 PM DRAFTSPERSON: JULIUS SACRILLO

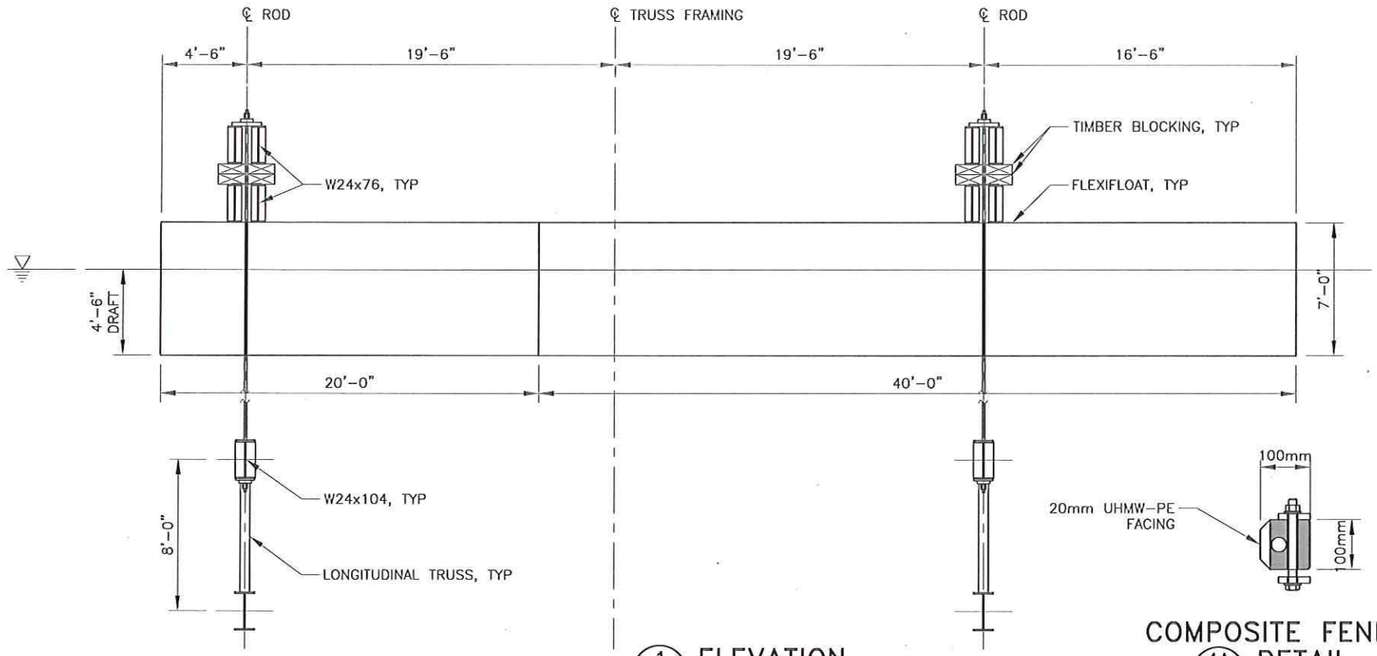

1 ELEVATION
SCALE: 1/8" = 1'-0"

COMPOSITE FENDER
4A DETAIL
SCALE: 1" = 1'-0"

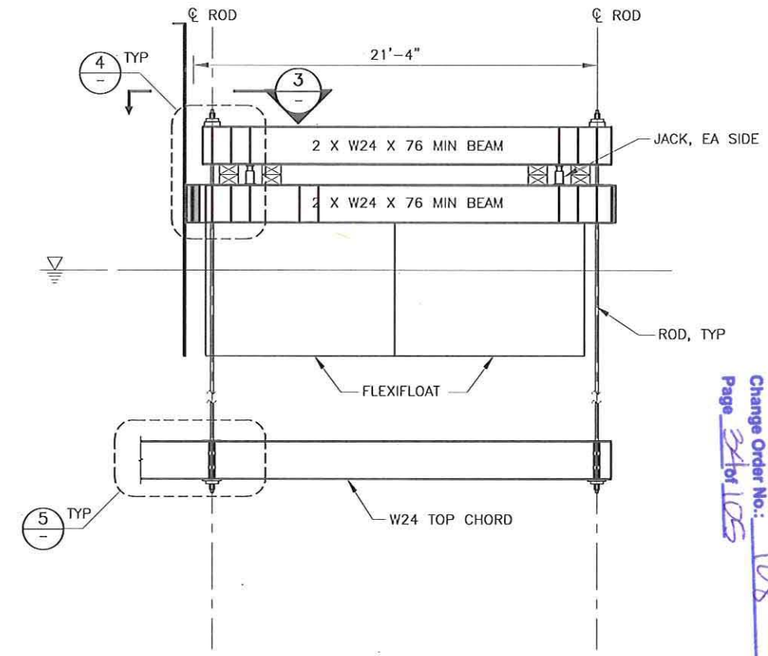

2 TOP FRAMING ON END FLEXIFLOATS
SCALE: 1/8 = 1'-0"

Contract No.: 0080066
Change Order No.: 108
Page 34 of 105

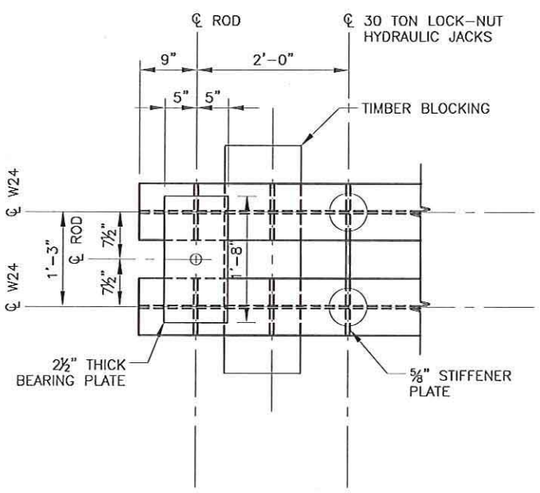

3 PLAN – JACKING ASSEMBLY
SCALE: 1/2" = 1'-0"

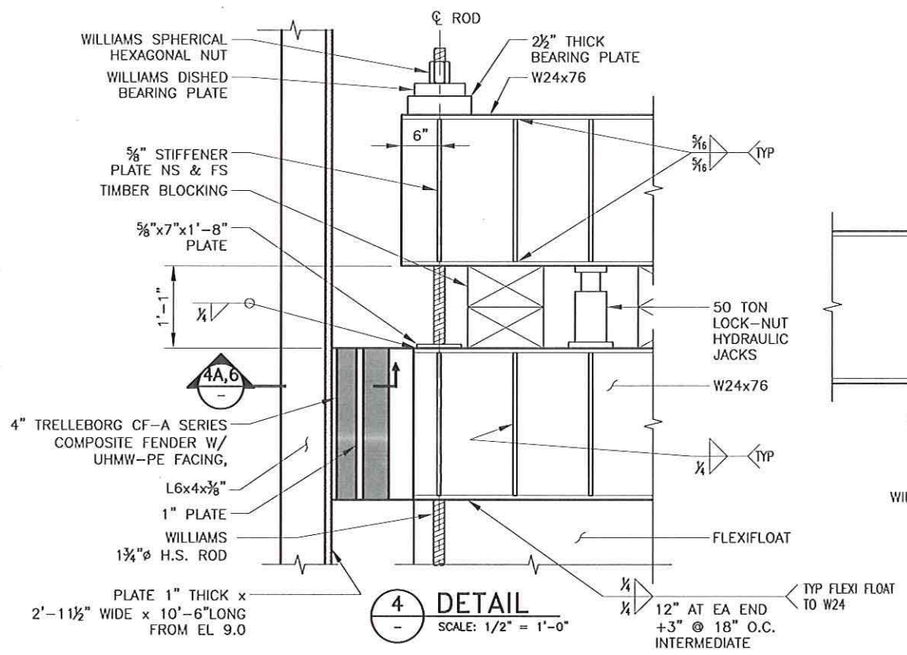

4 DETAIL
SCALE: 1/2" = 1'-0"

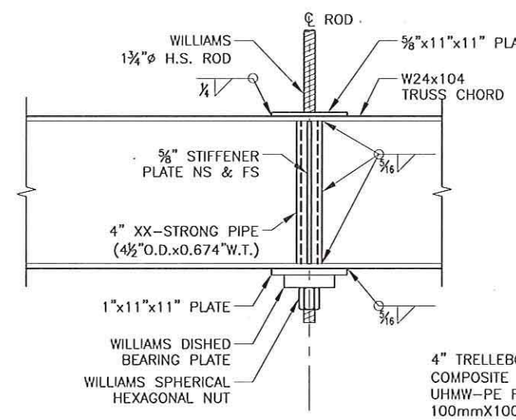

5 DETAIL
SCALE: 1/2" = 1'-0"

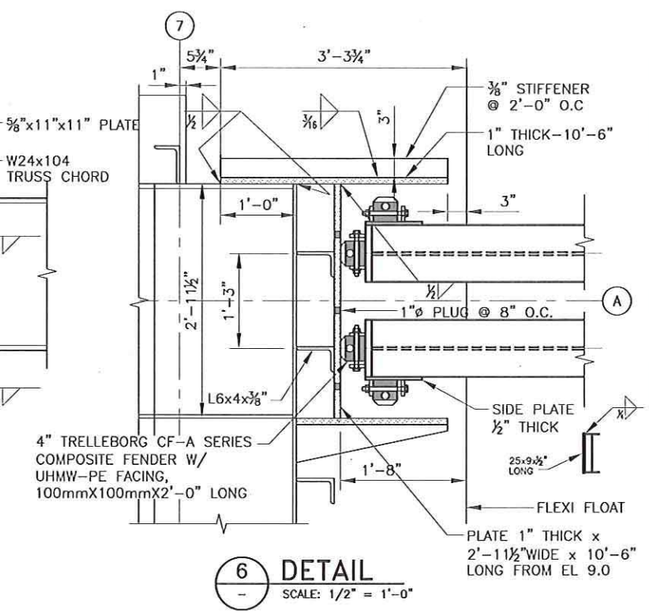

6 DETAIL
SCALE: 1/2" = 1'-0"

Rev.	Date	Description of Revision	Designed	Drawn	Checked

DESIGNED BY	CHECKED BY	DATE
SY	WOM	01/25/13
DRAWN BY	PLOT SCALE	PROJECT NUMBER
JUBA		
SIZE	PLOT DATE	FILE NAME
ANSI B	22-May-13	LC 019.DWG

THIS DRAWING AND THE INFORMATION CONTAINED HEREIN ARE THE PROPERTY OF BEN C. GERWICK, INC. AND MAY NOT BE REPRODUCED, DISTRIBUTED, MODIFIED REPURPOSED OR OTHERWISE USED WITHOUT THE PERMISSION OF BCG INC.

SAMUEL X. YAO
STATE OF WASHINGTON
46191
REGISTERED PROFESSIONAL ENGINEER
5/23/2013

Washington State Department of Transportation

Klewit/General/Manson
A Joint Venture

BEN C. GERWICK, INC.
A COWI Company

PROJECT NAME
SR 520 COFFERDAM

DRAWING TITLE
FLEXIFLOAT AND CONNECTION 1

Sheet No.
LC 019

Sheet of

FILE LOCATION: P:\2012\2012-01\DGN\DWG\STAMP\C_LARGE\ COFFERDAM\CIVIL\C-019.DWG DATE: 5/22/2013 4:46:07 PM DRAFTSPERSON: JULIUS MACNELLO

Contract No.: 0080066
Change Order No.: 108
Page 35 of 105

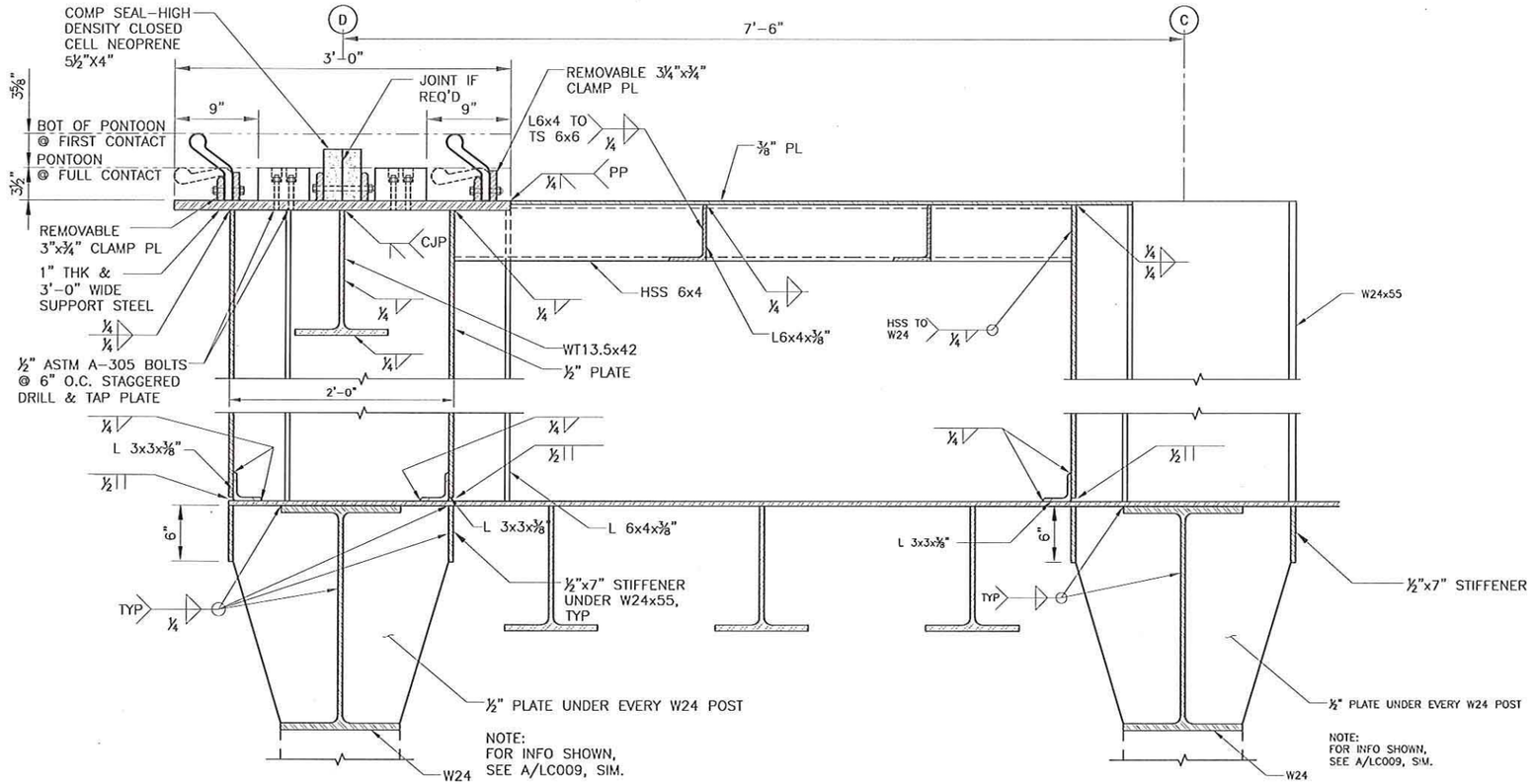

1 LC010 SEAL & LOW WALL DETAIL
SCALE: 1" = 1'–0"

4 LC010 SEAL & LOW WALL DETAIL
SCALE: 1" = 1'–0"

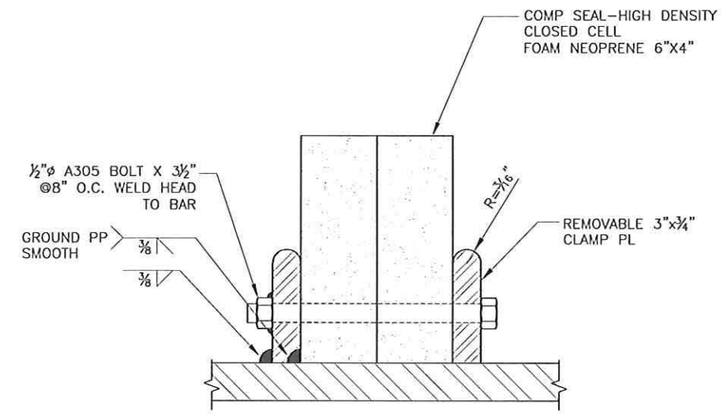

5 – DETAIL
SCALE: 3" = 1'–0"

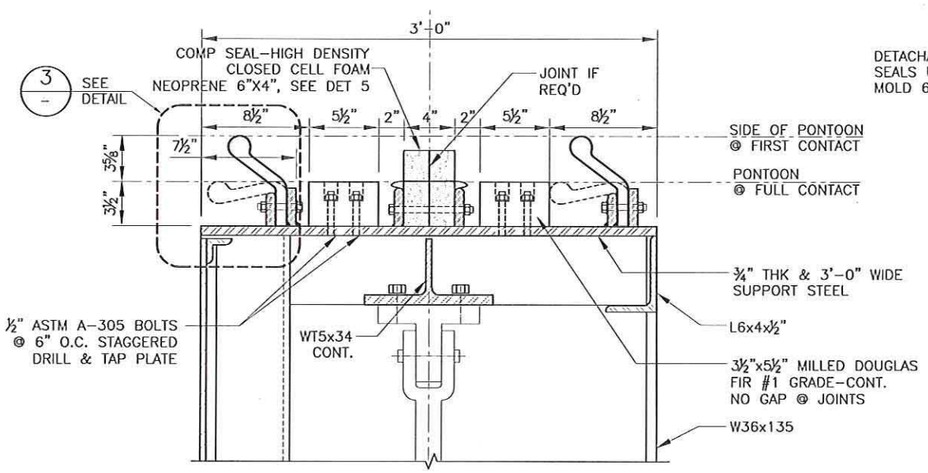

2 LC021 SEAL DETAIL–GATE SIDE
SCALE: 1" = 1'–0"

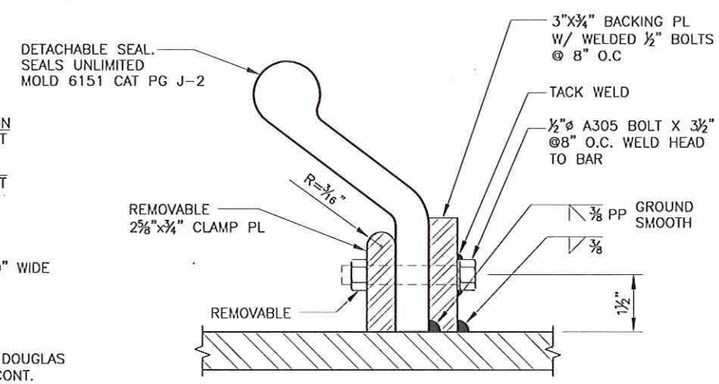

3 – DETAIL
SCALE: 3" = 1'–0"

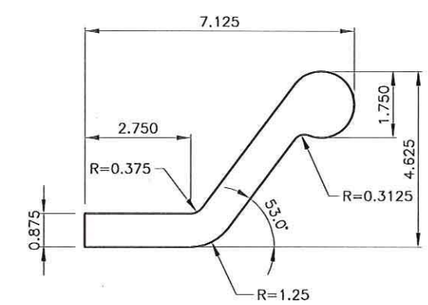

6 – MOLD 6151
SCALE: 3" = 1'–0"

Rev.	Date	Description of Revision	Designed	Drawn	Checked

DESIGNED BY	CHECKED BY	DATE
SY	WGM	01/25/13
DRAWN BY	PLOT SCALE	PROJECT NUMBER
JUSA		
SIZE	PLOT DATE	FILE NAME
ANSI B	22-May-13	LC 020.DWG

THIS DRAWING AND THE INFORMATION CONTAINED HEREIN ARE THE PROPERTY OF BEN C. GERWICK, INC. AND MAY NOT BE REPRODUCED, DISTRIBUTED, MODIFIED, REPOSITED OR OTHERWISE USED WITHOUT THE PERMISSION OF BCG INC.

SAMUEL X. TAO — STATE OF WASHINGTON — 46701 — REGISTERED PROFESSIONAL ENGINEER — 5/23/2013

Washington State Department of Transportation

Klewit/General Manson A Joint Venture

BEN C. GERWICK, INC. A CCM Company

PROJECT NAME: SR 520 COFFERDAM

DRAWING TITLE: SEAL DETAILS

Sheet No. LC 020

Sheet of

FILE LOCATION: P:\2012\2013-06\DWG\CT AMPHD_LARGE COFFERDAM\DWG\LC 020.DWG DATE: 5/22/2013 4:47:00 PM DRAFTSPERSON: JULIUS MACNELLO

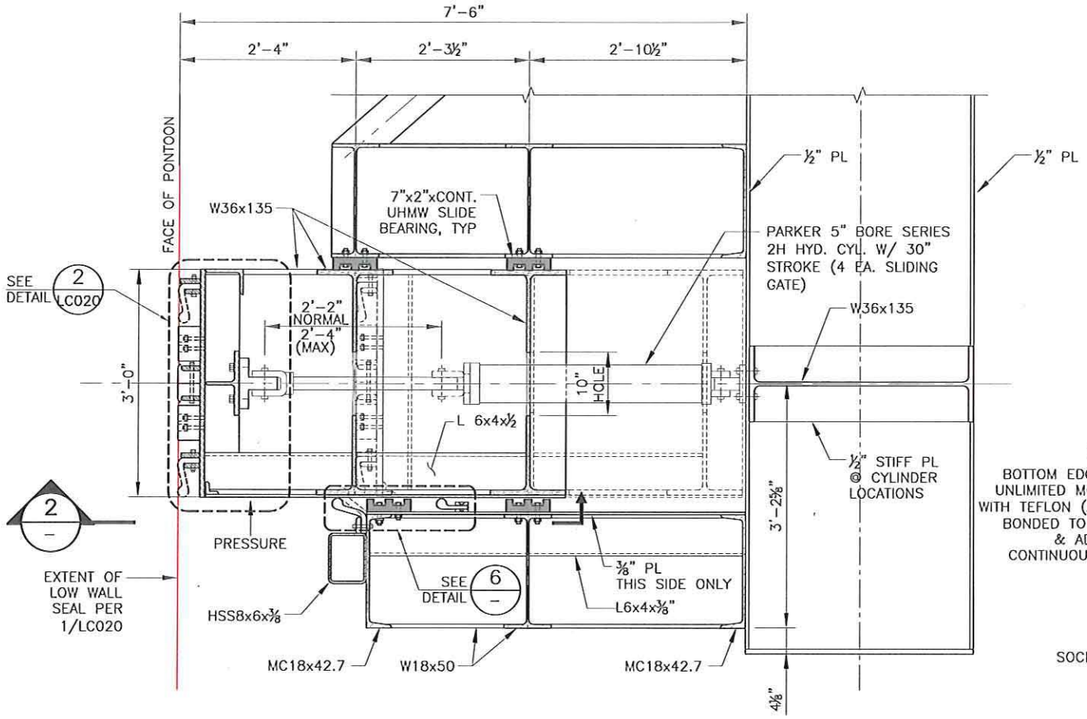

1 LC004 SLIDING GATE SECTIONAL PLAN
SCALE: 1/2 = 1'-0" (AS SHOWN & OPP. HAND)

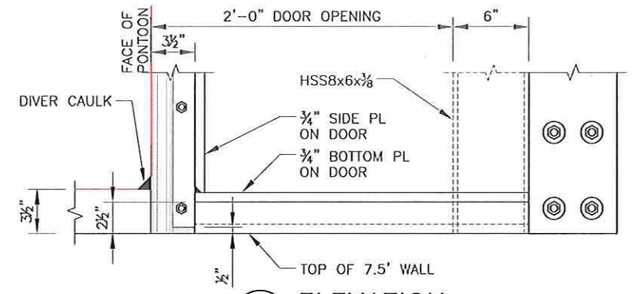

2 ELEVATION
SCALE: 1" = 1'-0"

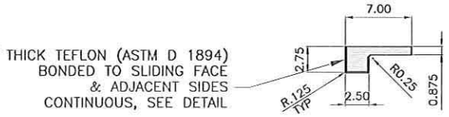

DETAIL – MOLD NO. 5040 CAT PG. G2

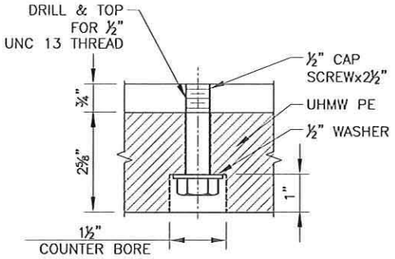

5 DETAIL
SCALE: 3" = 1'-0"

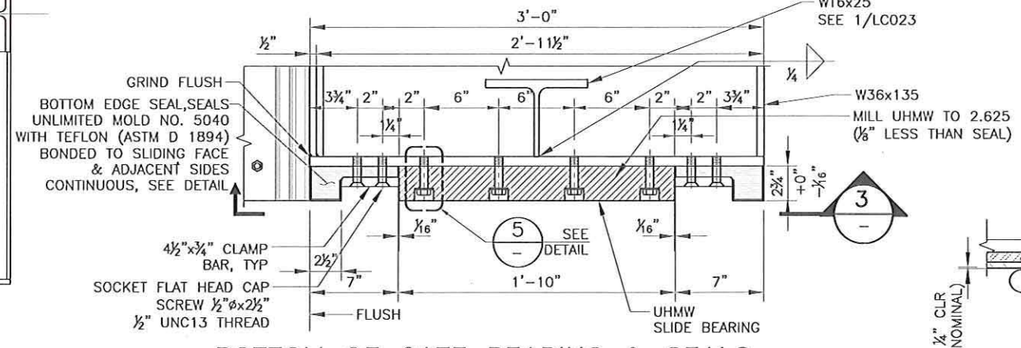

BOTTOM OF GATE BEARING & SEALS

4 DETAIL
SCALE: 1" = 1'-0"

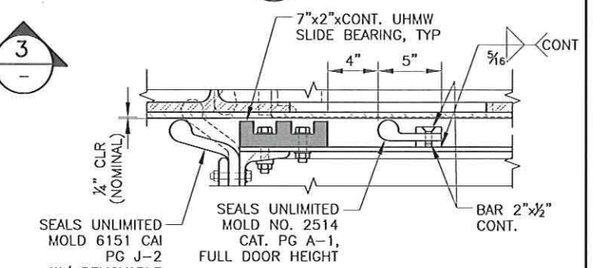

6 DETAIL
SCALE: 1" = 1'-0"

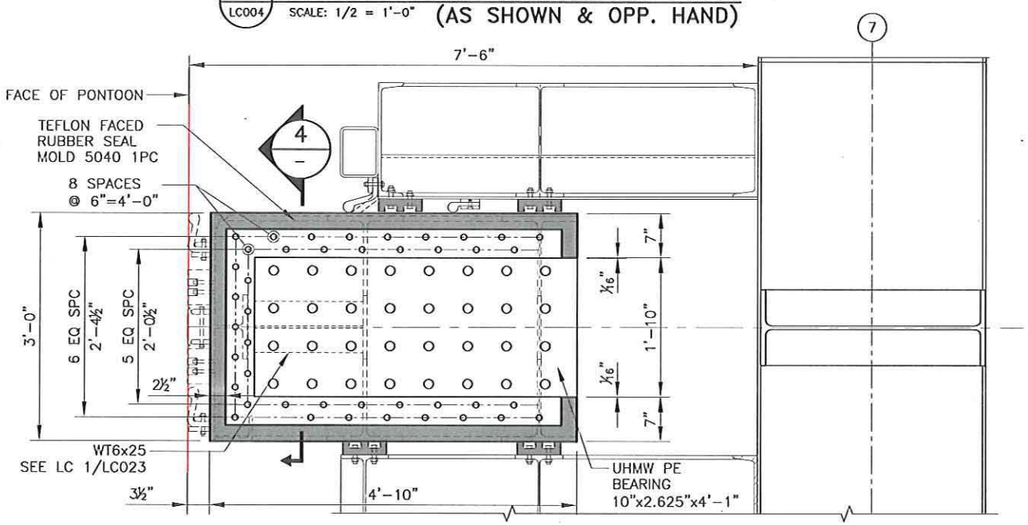

3 DETAIL–BOT OF GATE PLAN – (LOOKING UP)
SCALE: 1/2" = 1'-0"

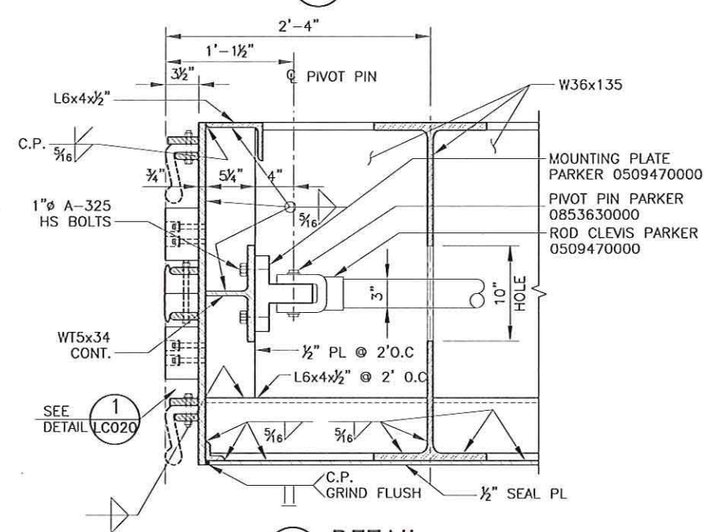

7 DETAIL
SCALE: 3/4" = 1'-0"

Contract No.: 0080066
Change Order No.: 108
Page 36 of 105

Rev.	Date	Description of Revision	Designed	Drawn	Checked

DESIGNED BY	CHECKED BY	DATE
SY	WOM	01/25/13
DRAWN BY	PLOT SCALE	PROJECT NUMBER
JUSA		
SIZE	PLOT DATE	FILE NAME
ANSI B	22-May-13	LC 021.DWG

THIS DRAWING AND THE INFORMATION CONTAINED HEREIN ARE THE PROPERTY OF BEN C. GERWICK, INC. AND MAY NOT BE REPRODUCED, DISTRIBUTED, MODIFIED REPUTED OR OTHERWISE USED WITHOUT THE PERMISSION OF BCG INC.

SAMUEL X. YAO STATE OF WASHINGTON 36791 REGISTERED PROFESSIONAL ENGINEER 5/23/2013

Washington State Department of Transportation

Kiewit/General/Manson A Joint Venture

BEN C. GERWICK, INC. A CCM Company

PROJECT NAME: SR 520 COFFERDAM

DRAWING TITLE: SLIDING GATE PLAN, SECTIONS AND DETAILS

Sheet No. LC 021

Sheet of

FILE LOCATION: P:\2012\2012-009\DWG\STAMPS\D_LARGE COFFERDAM\CHALC 021.DWG DATE: 5/22/2013 4:47:53 PM DRAFTSPERSON: JULIUS SACHILLO

Contract No.: 008066
Change Order No.: 108
Page 37 of 105

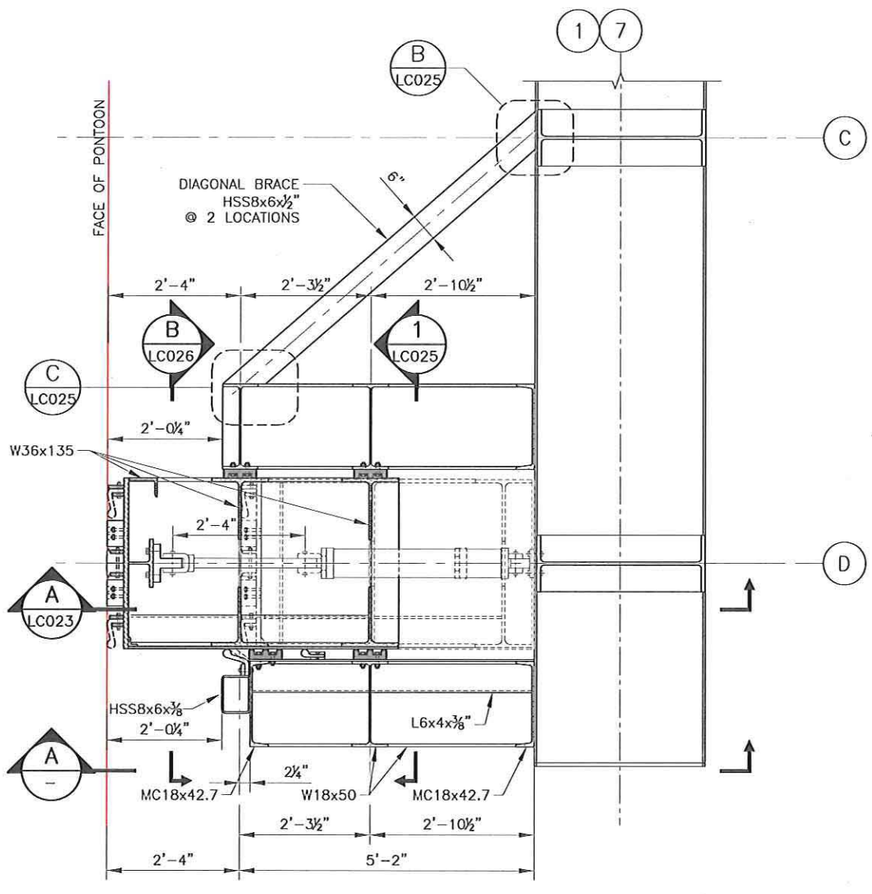

1 / LC004 DETAIL–GATE CLOSURE PLAN
SCALE: 3/8" = 1'-0"

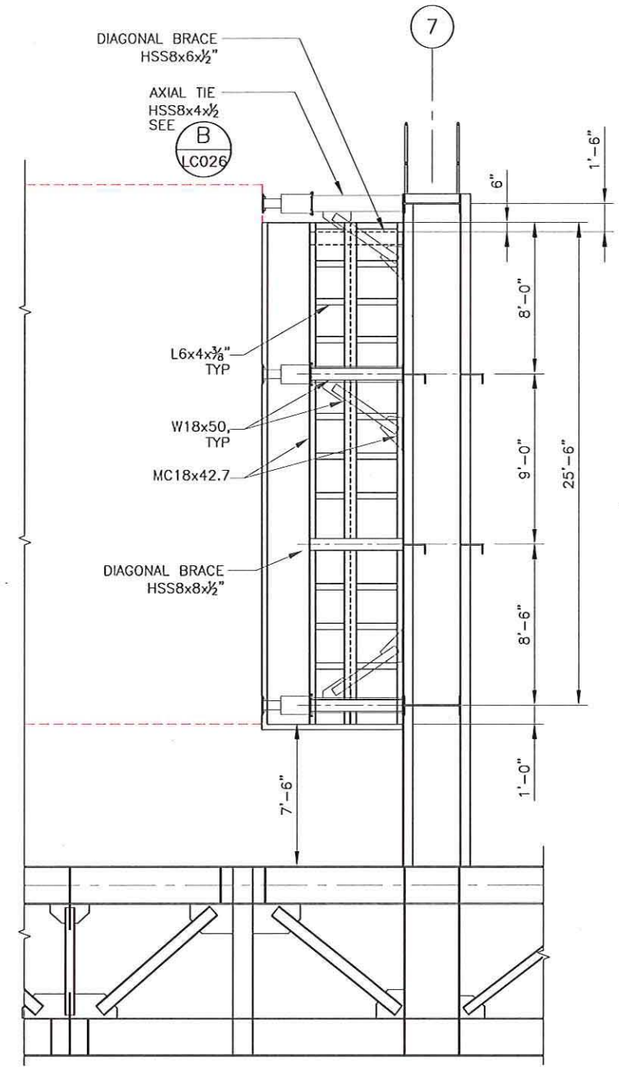

PONTOON V – TYPE 1/1A
A / – DETAIL–GATE CLOSURE ELEVATION
SCALE: 3/8" = 1'-0"

Rev.	Date	Description of Revision	Designed	Drawn	Checked

DESIGNED BY	CHECKED BY	DATE
SY	WCM	01/25/13
DRAWN BY	PLOT SCALE	PROJECT NUMBER
JUSA		
SIZE	PLOT DATE	FILE NAME
ANSI B	22-May-13	LC 022.DWG

THIS DRAWING AND THE INFORMATION CONTAINED HEREIN ARE THE PROPERTY OF BEN C. GERWICK, INC. AND MAY NOT BE REPRODUCED, DISTRIBUTED, MODIFIED, REPORTED OR OTHERWISE USED WITHOUT THE PERMISSION OF BCG INC.

SAMUEL X. YAO
STATE OF WASHINGTON
46793
REGISTERED PROFESSIONAL ENGINEER
5/23/2013

Washington State Department of Transportation
Klewit/General/Manson A Joint Venture
BEN C. GERWICK, INC. A CORE Company

PROJECT NAME
SR 520 COFFERDAM
DRAWING TITLE
SLIDING GATE
PLAN, SECTIONS AND DETAILS

Sheet No.
LC 022
Sheet of

FILE LOCATION: P:\SR520\13-899\INDIVIDUAL\AMPID_LARGE COFFER\DAMONGALE 022.DWG DATE: 5/22/2013 4:47:53 PM DRAFTSPERSON: JULIUS DACRILLO

Contract No.: 008066
Change Order No.: 108
Page 38 of 105

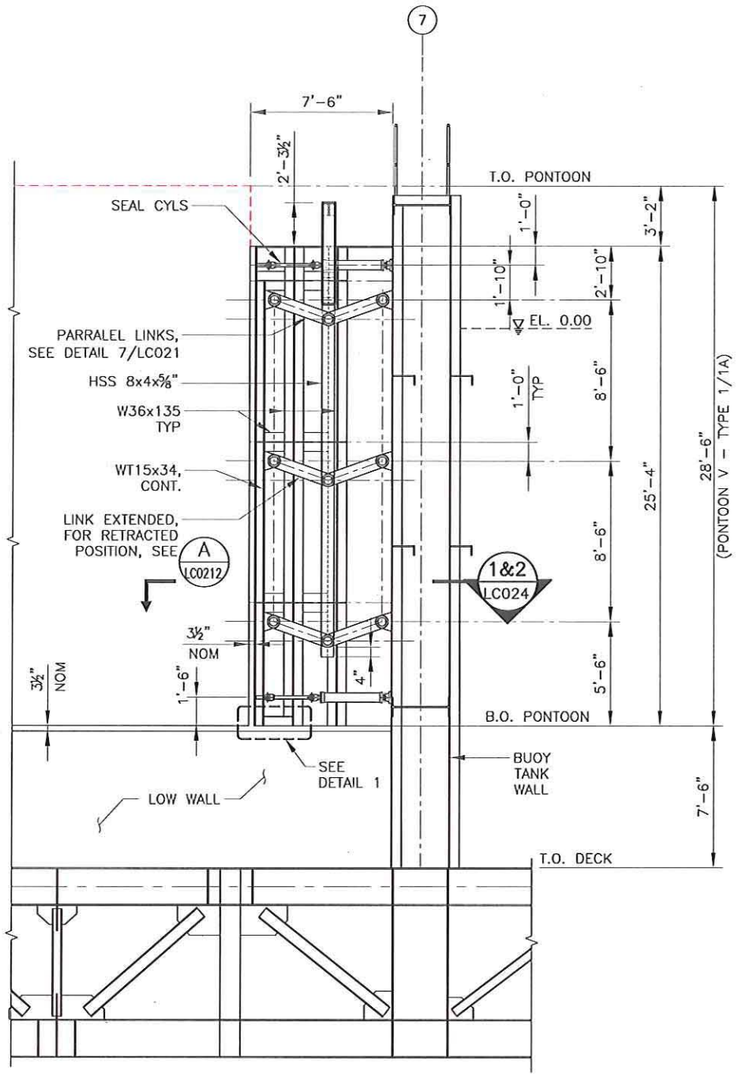

A LC022 PONTOON V – TYPE 1/1A COFFERDAM CLOSURE GATE DETAIL
SCALE: 1/8 = 1'-0" (AS SHOWN & OPP. HAND)

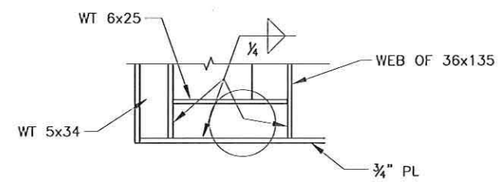

1 DETAIL
SCALE: 1/2 = 1'-0"

Rev.	Date	Description of Revision	Designed	Drawn	Checked

DESIGNED BY	CHECKED BY	DATE
	WCM	01/25/13
DRAWN BY	PLOT SCALE	PROJECT NUMBER
SIZE	PLOT DATE	FILE NAME
ANSI B	22-May-13	LC 023.DWG

THIS DRAWING AND THE INFORMATION DOCUMENTS HEREIN ARE THE PROPERTY OF BEN C. GERWICK, INC. AND MAY NOT BE REPRODUCED DISTRIBUTED MODIFIED REPOSITED OR OTHERWISE USED WITHOUT THE PERMISSION OF BCG INC.

SAMUEL X. YAO STATE OF WASHINGTON 46101 REGISTERED PROFESSIONAL ENGINEER 5/23/2013

Washington State Department of Transportation

Kiewit/General Manson A Joint Venture

BEN C. GERWICK, INC. A CCC/HJ Company

PROJECT NAME: SR 520 COFFERDAM

DRAWING TITLE: SLIDING DOOR SECTIONS AND DETAILS

Sheet No.: LC 023

Sheet of

FILE LOCATION: P:\2012\2012-009\DRAWING\TAMPIQ_LARGE COFFERDAM\DWG\LC023.DWG DATE: 5/22/2013 4:47:07 PM DRAFTSPERSON: JULIUS BAONILLO

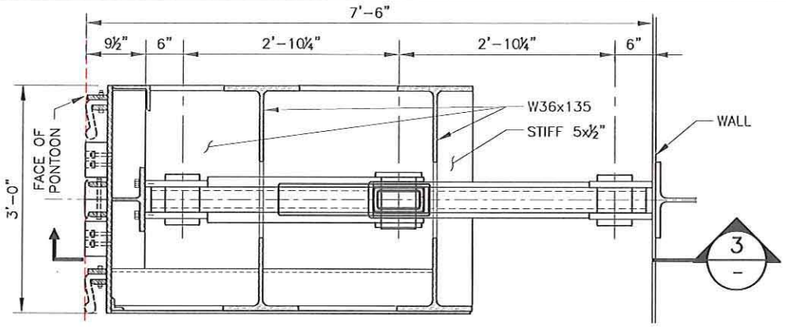

1 LC023 PARALLEL LINK DETAIL
SCALE: 1/2" = 1'-0" (SHOWN EXTENDED)

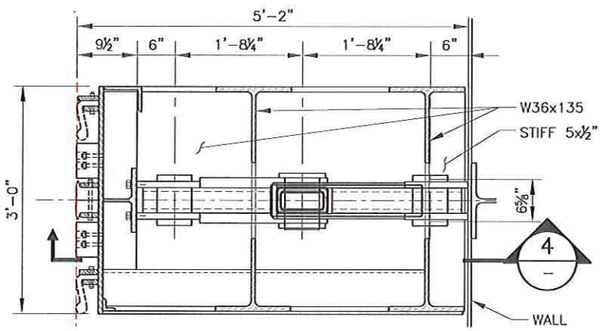

2 LC023 PARALLEL LINK DETAIL
SCALE: 1/2" = 1'-0" (SHOWN RETRACTED)

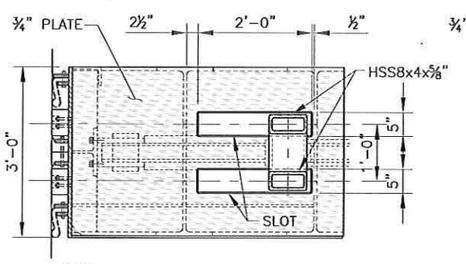

A SLOT SECTION
SCALE: 3/8" = 1'-0"

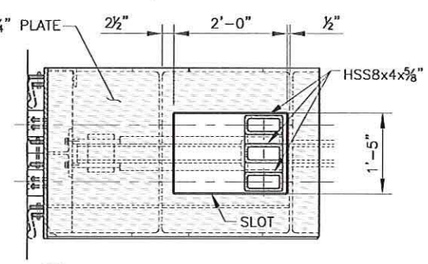

B SLOT SECTION
SCALE: 3/8" = 1'-0"

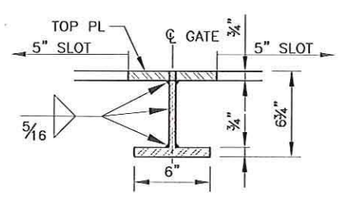

D TOP GATE T BEAM
SCALE: 3/8" = 1'-0"

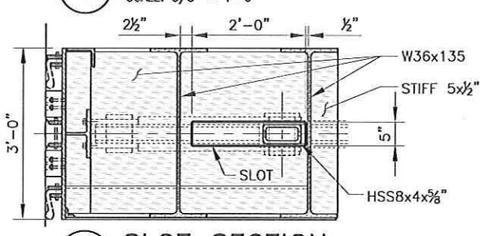

C SLOT SECTION
SCALE: 3/8" = 1'-0"

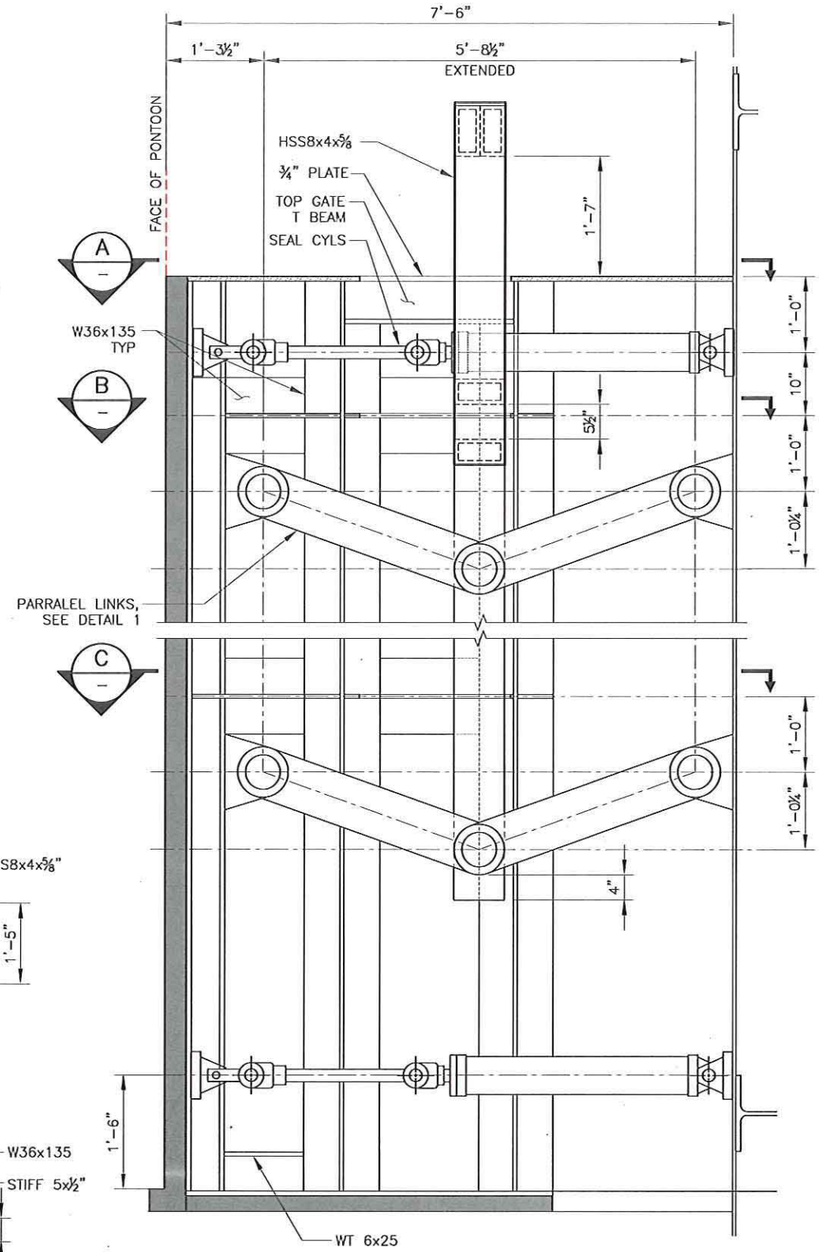

3 SECTION
SCALE: 1/2" = 1'-0"

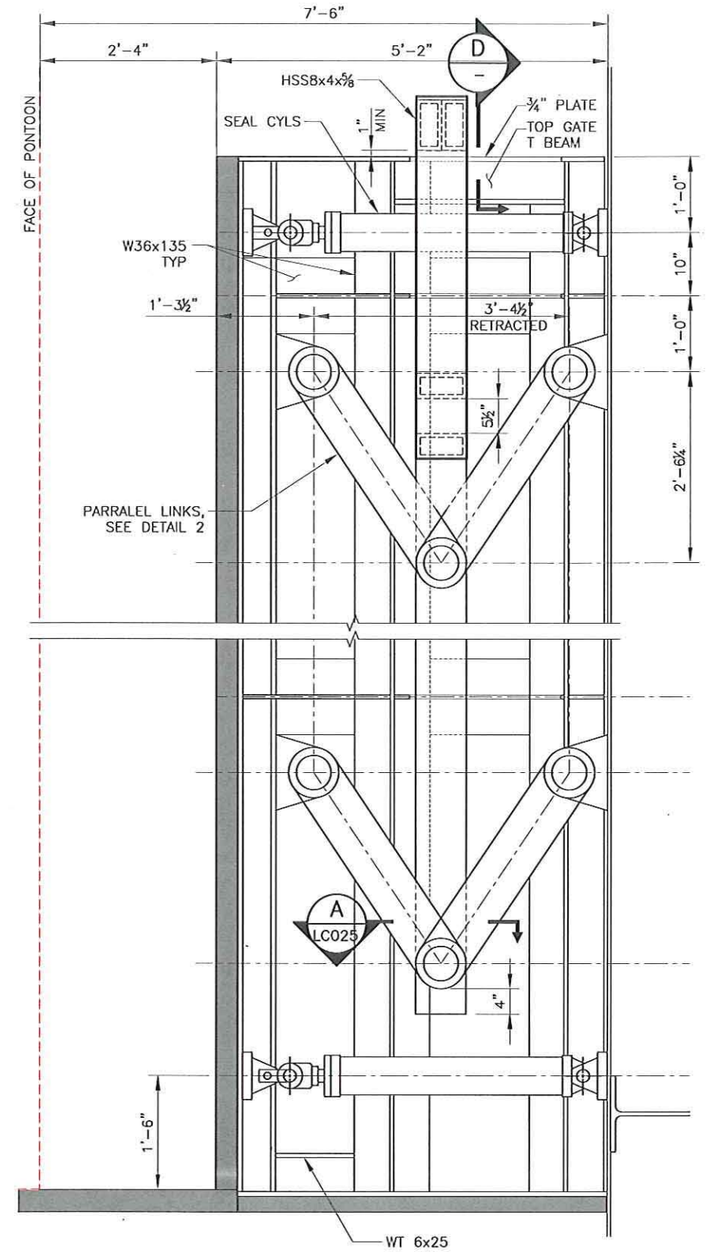

4 SECTION
SCALE: 1/2" = 1'-0"

Contract No.: 008066
Change Order No.: 108
Page 39 of 105

Rev.	Date	Description of Revision	Designed	Drawn	Checked

DESIGNED BY	CHECKED BY	DATE
	WOM	01/25/13
DRAWN BY	PLOT SCALE	PROJECT NUMBER
SIZE	PLOT DATE	FILE NAME
ANSI B	22-May-13	LC 024.DWG

THIS DRAWING AND THE INFORMATION CONTAINED HEREIN ARE THE PROPERTY OF BEN C. GERWICK, INC. AND MAY NOT BE REPRODUCED, DISTRIBUTED, MODIFIED, REPOSITED, OR OTHERWISE USED WITHOUT THE PERMISSION OF BCG INC.

SAMUEL X YAO
STATE OF WASHINGTON
40791
REGISTERED PROFESSIONAL ENGINEER
5/23/2013

Washington State Department of Transportation

Kiewit/General/Manson A Joint Venture

BEN C. GERWICK, INC. A CCC/SS Company

PROJECT NAME
SR 520 COFFERDAM

DRAWING TITLE
SLIDING DOOR DETAILS

Sheet No.
LC 024
Sheet of

FILE LOCATION: P:\2012\2012-0056\DWG\DIST\MAPVCD_LARGE COFFER\MAPVCD_LARGE COFFER.DWG DATE: 5/22/2013 4:47:19 PM DRAFTSPERSON: JULIUS BACINELLO

Contract No.: 008066
Change Order No.: 108
Page 40 of 105

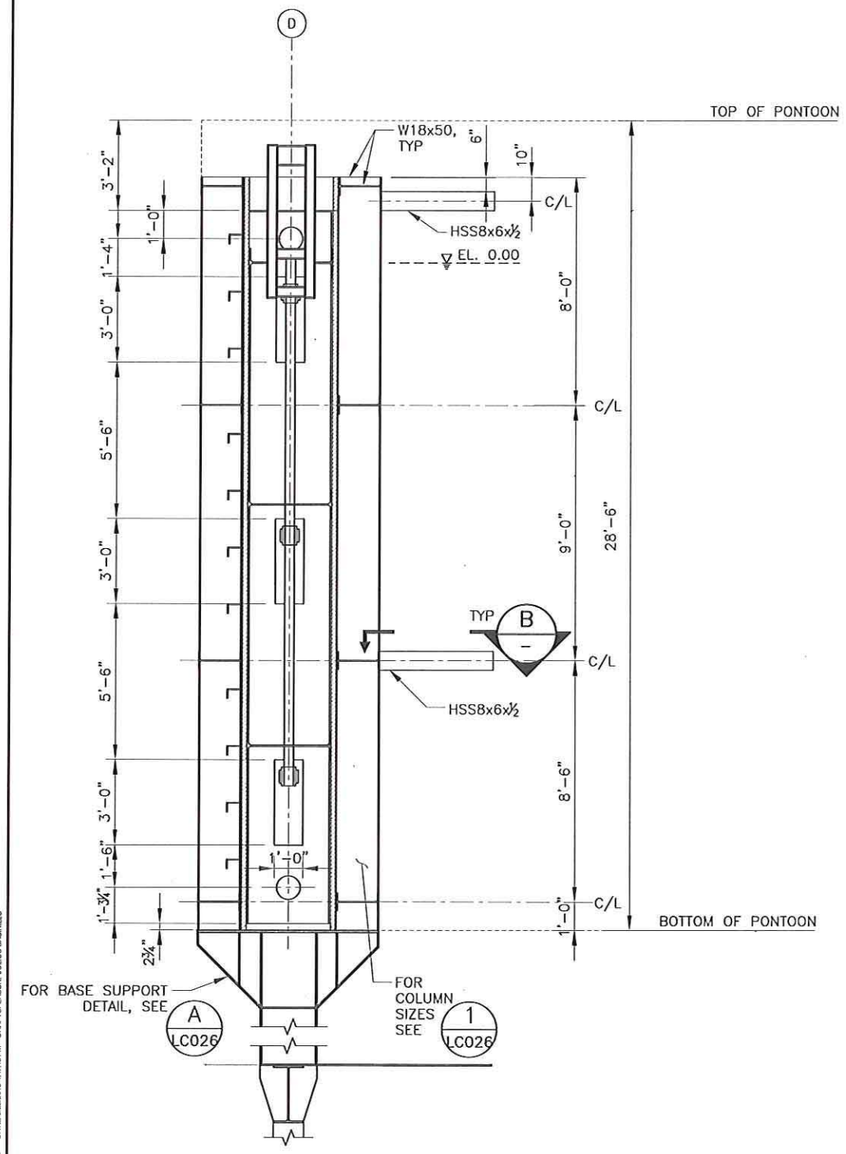

1 LC022 SECTION
SCALE: 3/16" = 1'-0"

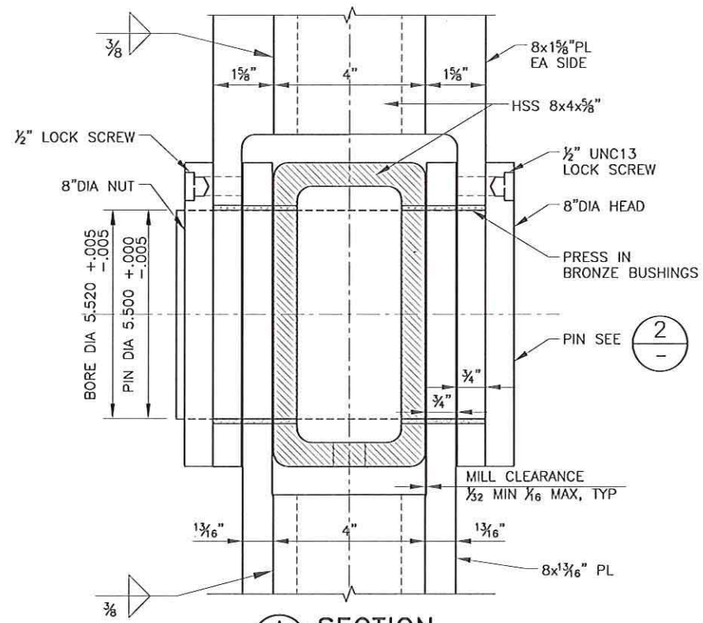

A LC0024 SECTION
SCALE: 3" = 1'-0"

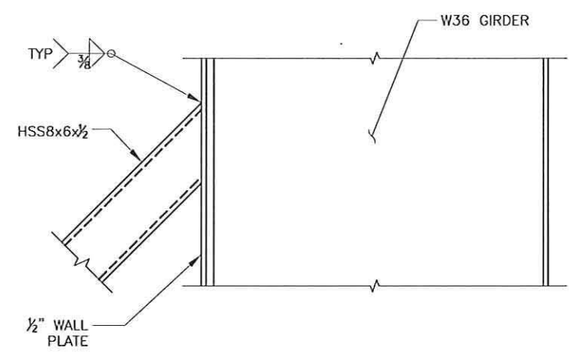

B DETAIL
SCALE: 3/4" = 1'-0"

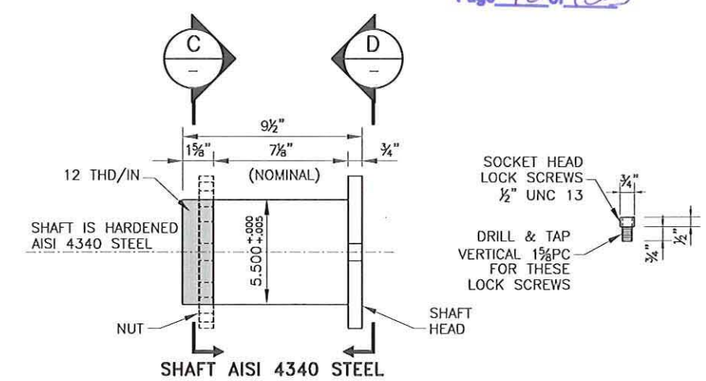

2 PARALLEL LINK SHAFT (PIN)
SCALE: 1 1/2" = 1'-0"

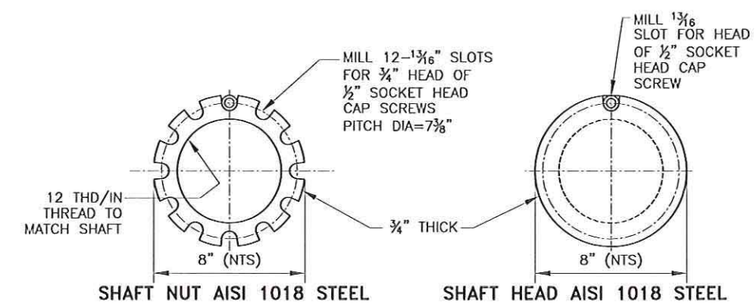

C SHAFT NUT
SCALE: 1 1/2" = 1'-0"

D SHAFT HEAD
SCALE: 1 1/2" = 1'-0"

Rev.	Date	Description of Revision	Designed	Drawn	Checked

DESIGNED BY	CHECKED BY	DATE
	WOM	01/25/13
DRAWN BY	PLOT SCALE	PROJECT NUMBER
SIZE	PLOT DATE	FILE NAME
ANSI B	22-May-13	LC 025.DWG

THIS DRAWING AND THE INFORMATION CONTAINED HEREIN ARE THE PROPERTY OF BEN C. GERWICK, INC. AND MAY NOT BE REPRODUCED, DISTRIBUTED, MODIFIED, RE-POSTED, OR OTHERWISE USED WITHOUT THE PERMISSION OF BCG INC.

SAMUEL X. YAO
STATE OF WASHINGTON
40703
REGISTERED PROFESSIONAL ENGINEER
5/23/2013

Washington State Department of Transportation

Klewit/General/Manson A Joint Venture

BEN C. GERWICK, INC. A EDR Company

PROJECT NAME
SR 520 COFFERDAM

DRAWING TITLE
SLIDING GATE
PLAN, SECTIONS AND DETAILS

Sheet No.
LC 025
Sheet of

FILE LOCATION: P:\SR520\10-SHORE\WIGS\TAMPED_LARGE\COFFERDAM\DWG\LC025.DWG DATE: 5/22/2013 4:47:13 PM DRAFTSPERSON: JULIUS SACRILLO

Contract No.: 008066
Change Order No.: 108
Page 41 of 105

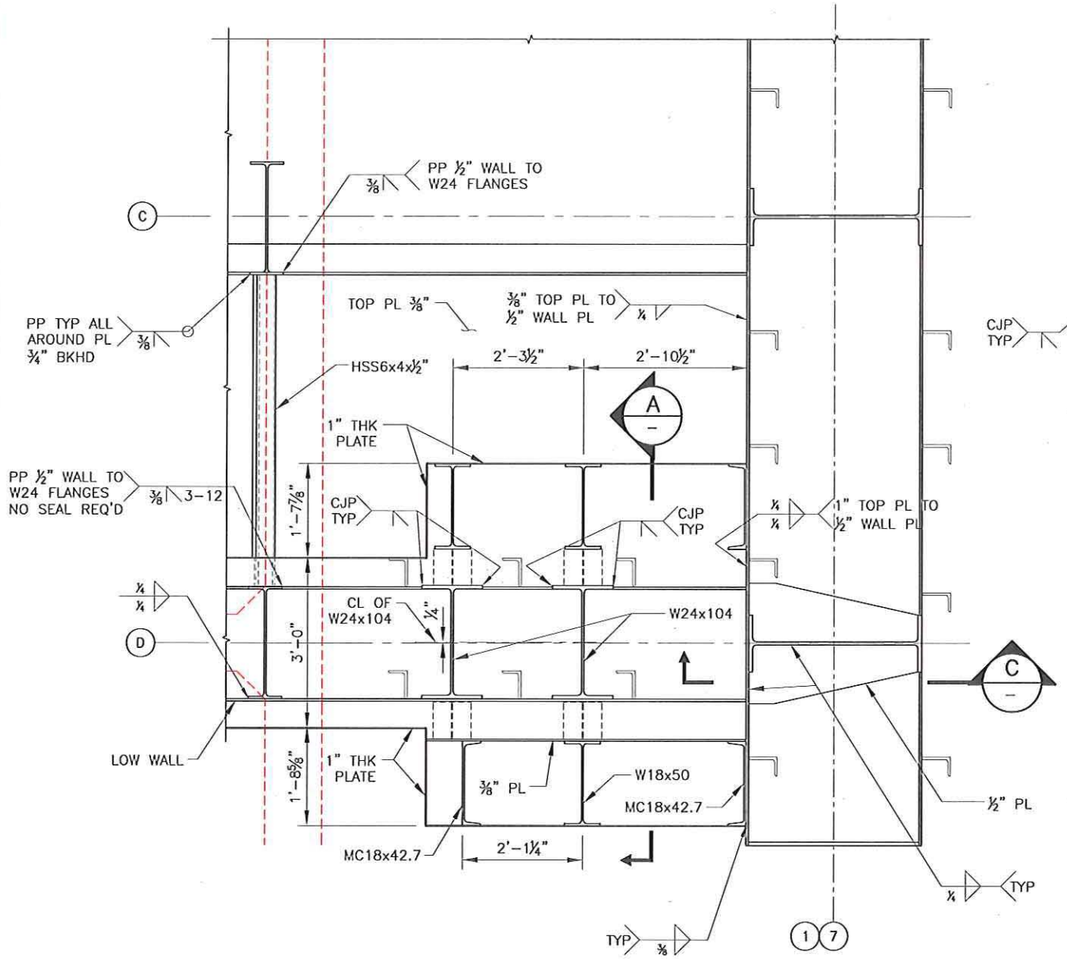

1 LC003 DETAIL PLAN
SCALE: 3/8" = 1'-0"

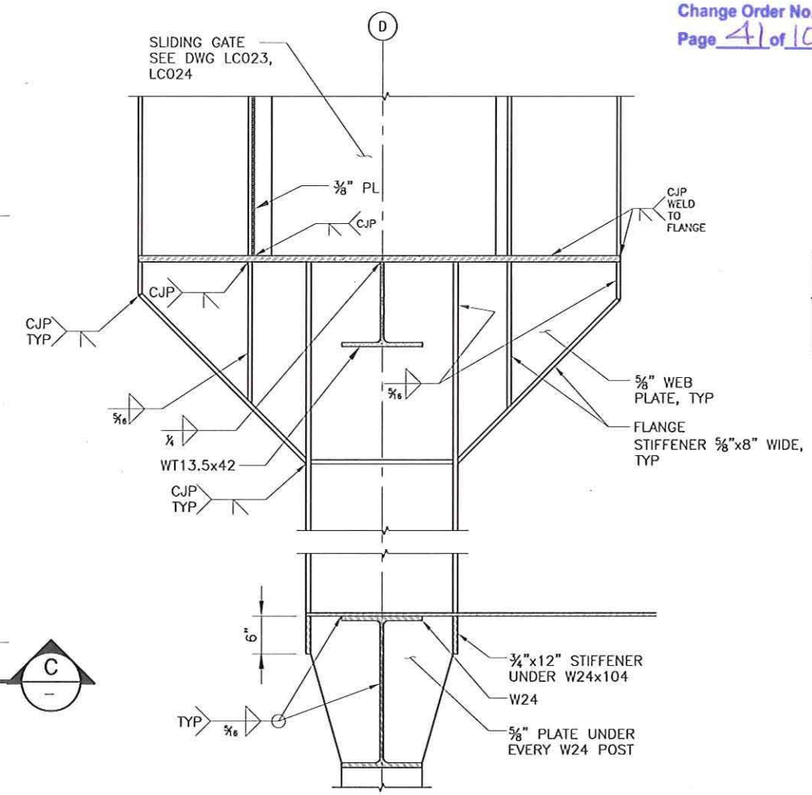

A – SECTION
SCALE: 1/2" = 1'-0"

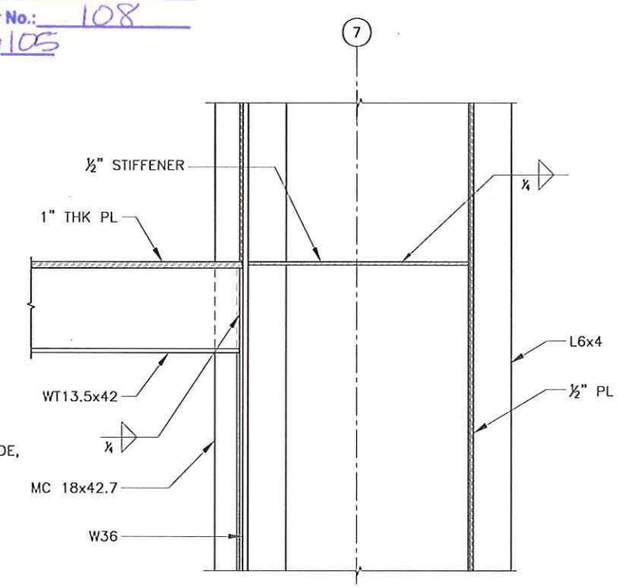

C – SECTION
SCALE: 1/2" = 1'-0"

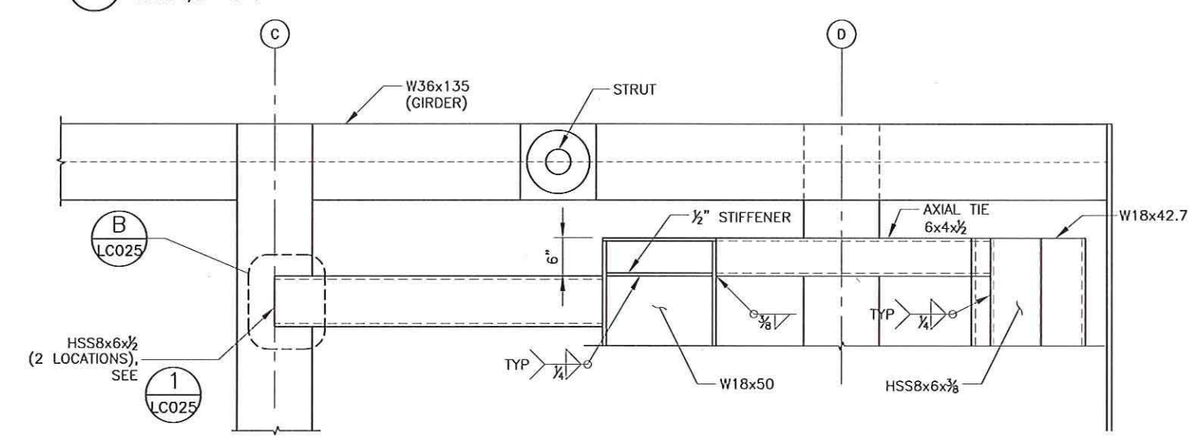

B LC022 SECTION
SCALE: 1/2" = 1'-0"

Rev.	Date	Description of Revision	Designed	Drawn	Checked

DESIGNED BY	CHECKED BY	DATE
SY	WCM	01/25/13
DRAWN BY	PLOT SCALE	PROJECT NUMBER
JUSA		
SIZE	PLOT DATE	FILE NAME
ANSI B	22-May-13	LC026.DWG

THIS DRAWING AND THE INFORMATION CONTAINED HEREIN ARE THE PROPERTY OF BEN C. GERWICK, INC. AND MAY NOT BE REPRODUCED, DISTRIBUTED, MODIFIED, REPOSITED OR OTHERWISE USED WITHOUT THE PERMISSION OF BCG INC.

SAMUEL X. TAO — STATE OF WASHINGTON — 46703 — REGISTERED PROFESSIONAL ENGINEER
5/23/2013

Washington State Department of Transportation

Kiewit/General/Manson A Joint Venture

BEN C. GERWICK, INC. A CH2M Company

PROJECT NAME: SR 520 COFFERDAM

DRAWING TITLE: LOW WALL DETAILS

Sheet No. LC 026

Sheet of

FILE LOCATION: P:\2012\2012-009\DWG\STAAR\D_LARGE COFFERDAM\DWG\LC026.DWG DATE: 5/22/2013 4:47:15 PM DRAFTSPERSON: JULIUS MACNILLO

Contract No.: 008066
Change Order No.: 108
Page 42 of 105

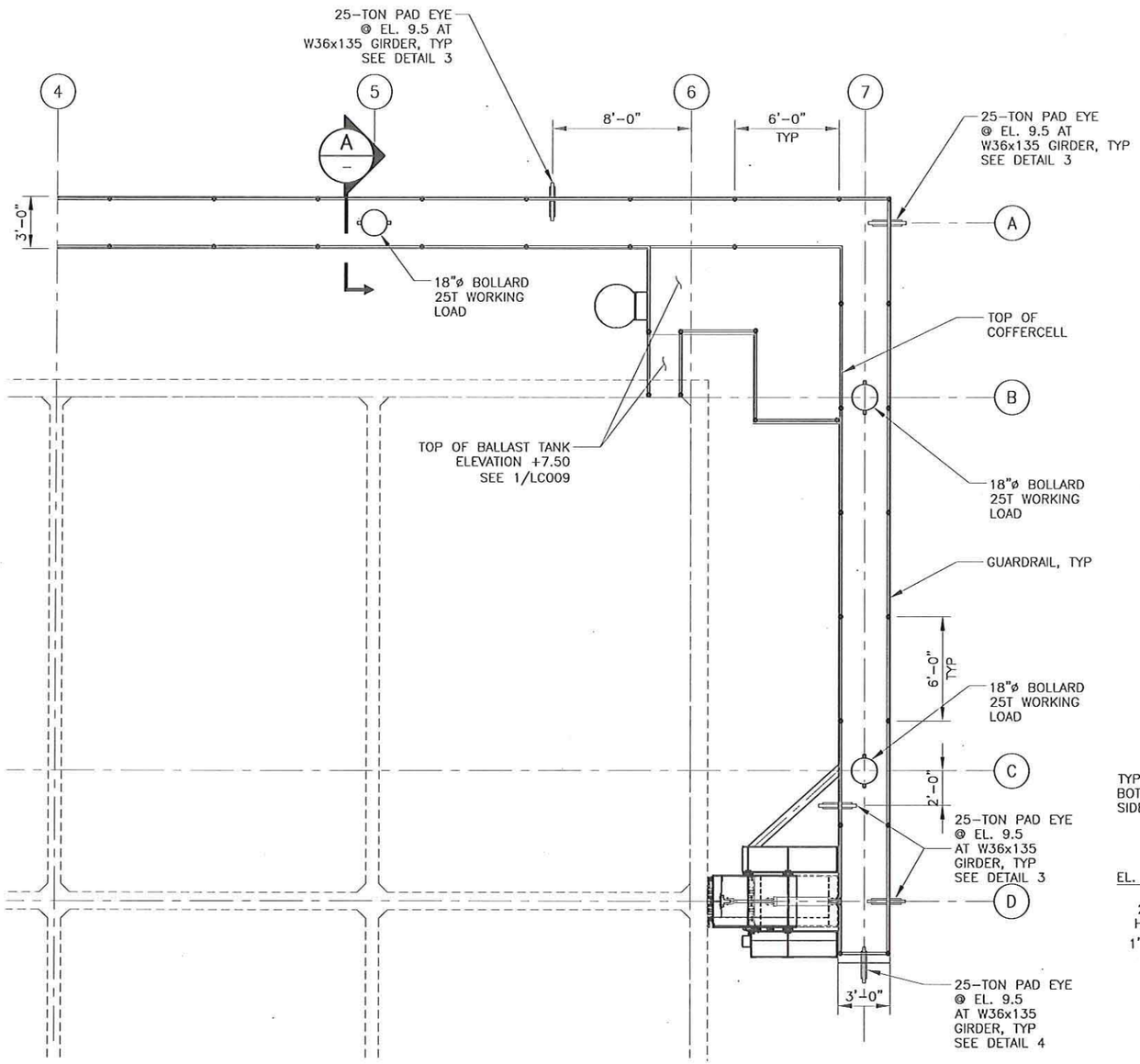

1 HANDRAIL HALF-PLAN
SCALE: 1/8 = 1'-0"

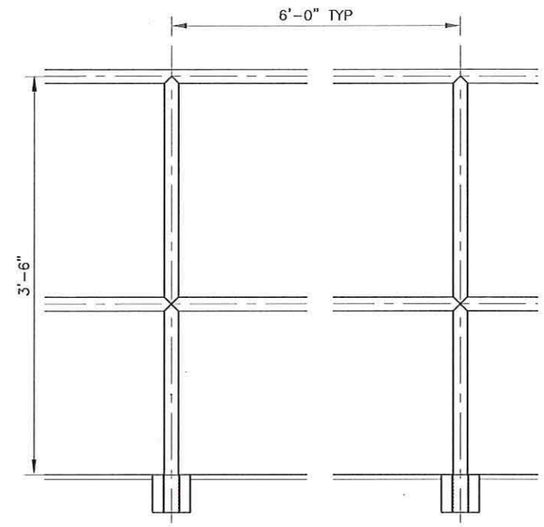

2 TYPICAL GUARDRAIL ELEVATION
SCALE: 3/4 = 1'-0"

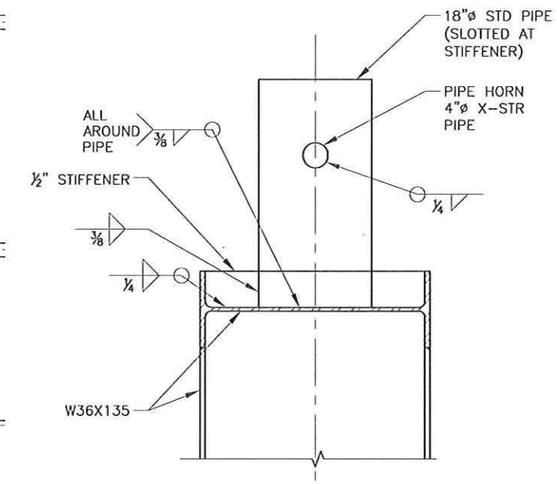

A SECTION AT BOLLARD
SCALE: 1/2 = 1'-0"

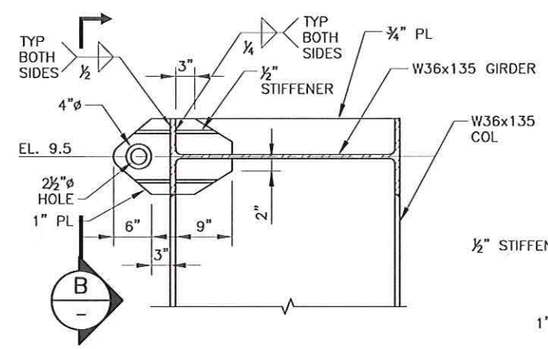

3 TYPICAL PADEYE DETAIL
SCALE: 1/2 = 1'-0"

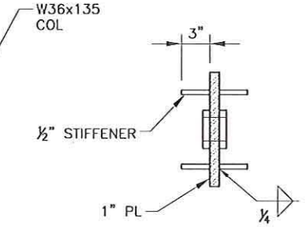

B DETAIL
SCALE: 3/4 = 1'-0"

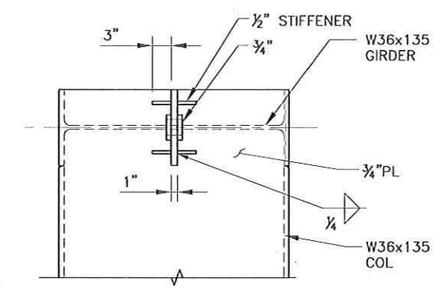

4 ELEVATION
SCALE: 1/2 = 1'-0"

Rev.	Date	Description of Revision	Designed	Drawn	Checked

DESIGNED BY	CHECKED BY	DATE
SY	WCM	01/25/13
DRAWN BY	PLOT SCALE	PROJECT NUMBER
JUSA		
SIZE	PLOT DATE	FILE NAME
ANSI B	22-May-13	LC 030.DWG

THIS DRAWING AND THE INFORMATION CONTAINED HEREIN ARE THE PROPERTY OF BEN C. GERWICK, INC. AND MAY NOT BE REPRODUCED, DISTRIBUTED, MODIFIED REPOSITED OR OTHERWISE USED WITHOUT THE PERMISSION OF BCG INC.

SAMUEL X. YAO
STATE OF WASHINGTON
46193
REGISTERED PROFESSIONAL ENGINEER
5/23/2013

Washington State Department of Transportation

Klewit/General/Manson A Joint Venture

BEN C. GERWICK, INC. A KGM Company

PROJECT NAME
SR 520 COFFERDAM

DRAWING TITLE
COFFERDAM ACCESS PLAN AND SECTIONS

Sheet No.
LC 030
Sheet of

FILE LOCATION: P:\520\2013\SHORING\STAMPED_LARGE COFFERDAM\CALC 030.DWG DATE: 5/22/2013 4:47:17 PM DRAFTSPERSON: JULIUS BACNILLO

Contract No.: 008066
Change Order No.: 108
Page 43 of 105

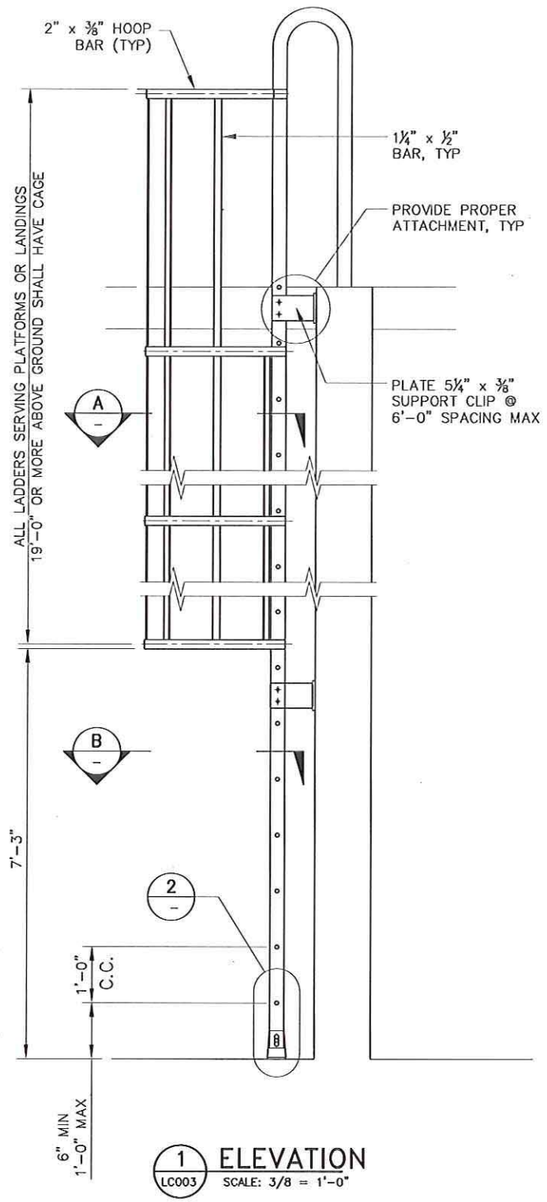

1 LC003 ELEVATION
SCALE: 3/8 = 1'-0"

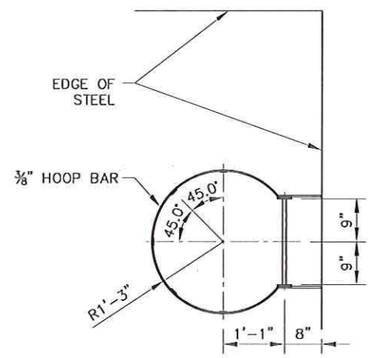

A SECTION
SCALE: 3/8 = 1'-0"

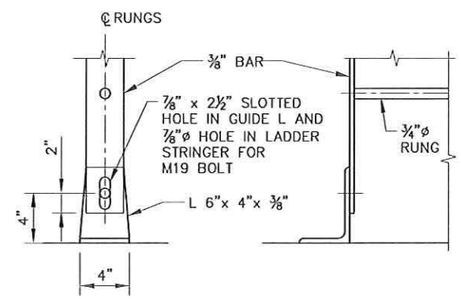

2 DETAIL
SCALE: 1" = 1'-0"

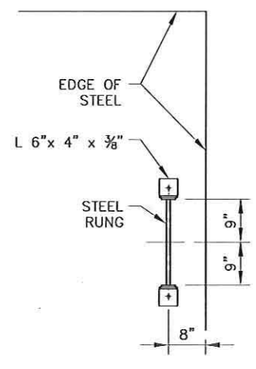

B SECTION
SCALE: 3/8 = 1'-0"

Rev.	Date	Description of Revision	Designed	Drawn	Checked

DESIGNED BY	CHECKED BY	DATE
SY	WCM	01/25/13
DRAWN BY	PLOT SCALE	PROJECT NUMBER
JUSA		
SIZE	PLOT DATE	FILE NAME
ANSI B	22-May-13	LC 031.DWG

THIS DRAWING AND THE INFORMATION CONTAINED HEREIN ARE THE PROPERTY OF BEN C. GERWICK, INC. AND MAY NOT BE REPRODUCED, DISTRIBUTED, MODIFIED, REPOSTED OR OTHERWISE USED WITHOUT THE PERMISSION OF BCG INC.

SAMUEL X. YAO
STATE OF WASHINGTON
46701
REGISTERED PROFESSIONAL ENGINEER
5/23/2013

Washington State Department of Transportation

Klewit/General/Manson A Joint Venture

BEN C. GERWICK, INC. A CCM Company

PROJECT NAME
SR 520 COFFERDAM

DRAWING TITLE
COFFERDAM ACCESS DETAILS

Sheet No.
LC 031
Sheet of

FILE LOCATION: P:\2012\2013-009\DWG\STAMP\D_LARGE COFFERDAM\DWG\LC031.DWG DATE: 5/22/2013 4:47:20 PM DRAFTSPERSON: JULIUS MACNELLO

NOTE:

1. ALL BULKHEAD (BKHD) ARE WATER TIGHT WITH NO HOLES W36 OR STIFFENER
2. ALL INTERIOR W36 COLUMNS, STIFFENER PLATES AND W36 GIRDERS INSIDE EACH WATER TANK TO HAVE 6"ø HOLE 4'-0" O.C.

LEGEND:

- TT – TRIM TANK
- ST – SIDE TANK
- ET – END TANK
- BT – BALLAST TANK
- LT – LOW TANK
- HAT – 24"ø HATCH
- PP – 16" PERFORATED PIPE TO DROP PUMP
- BKHD – BULKHEAD

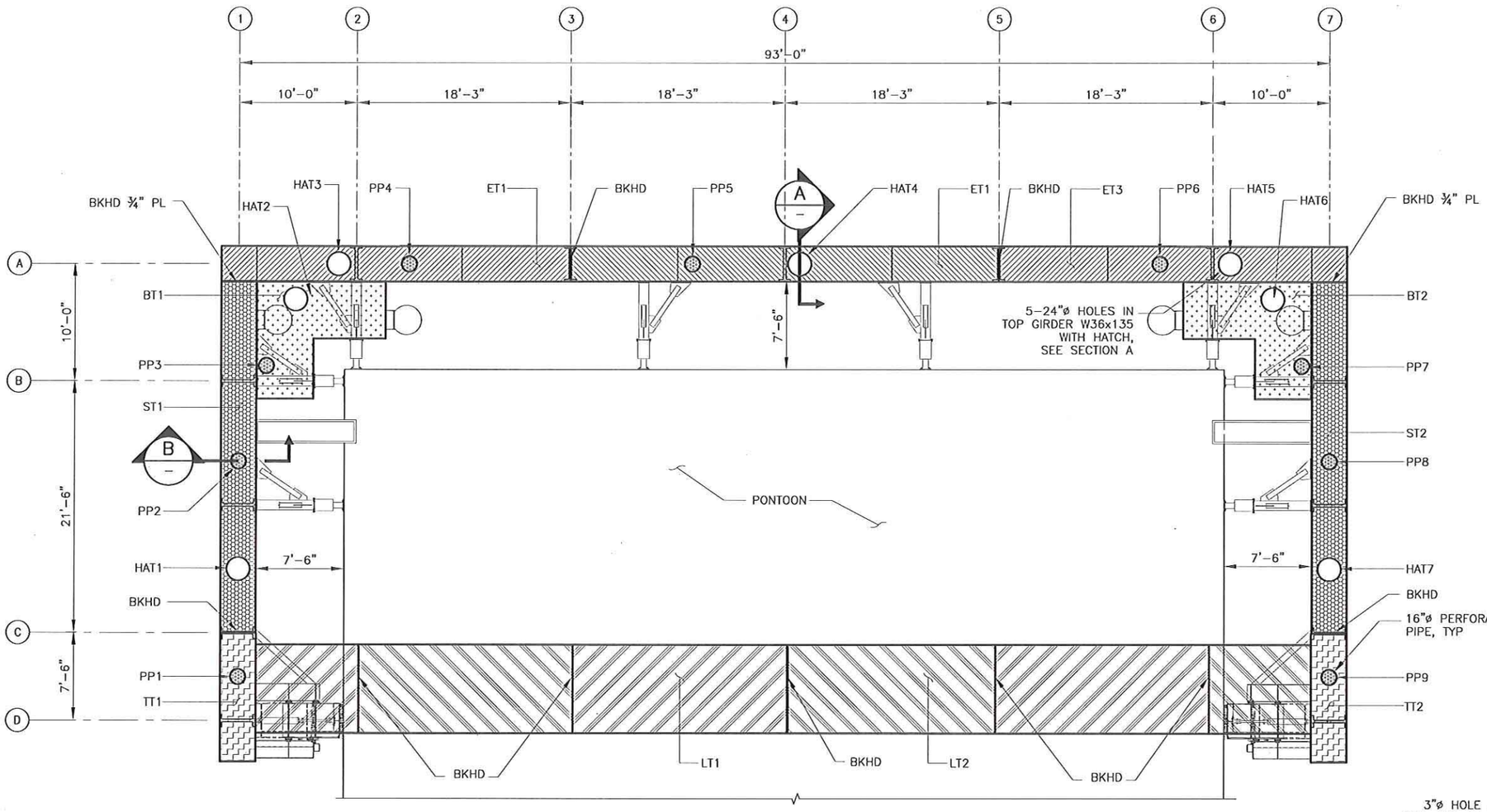

1 TANK PLAN
SCALE: 3/32 = 1'-0"

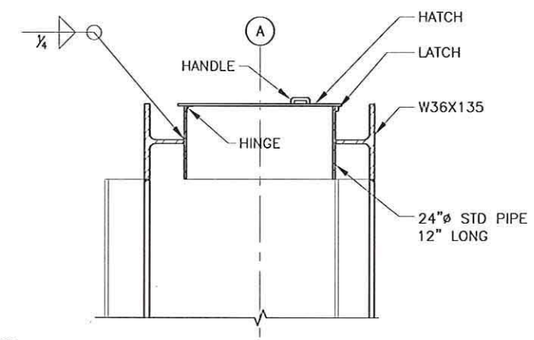

A SECTION
SCALE: 1/2 = 1'-0"

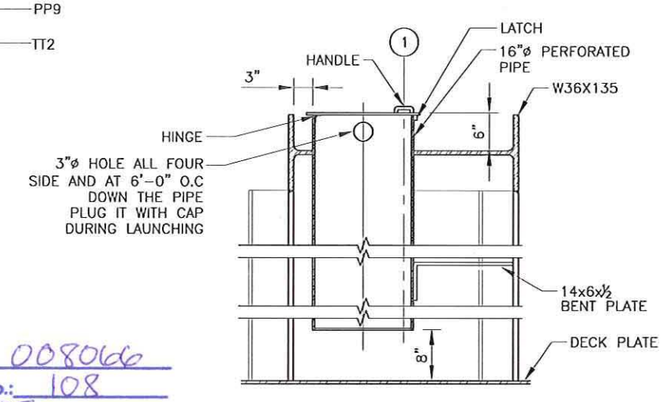

B SECTION
SCALE: 1/2 = 1'-0"

Contract No.: 008066
Change Order No.: 108
Page 44 of 105

Rev.	Date	Description of Revision	Designed	Drawn	Checked

DESIGNED BY	CHECKED BY	DATE
SY	WOM	01/25/13
DRAWN BY	PLOT SCALE	PROJECT NUMBER
JUSA		
SIZE	PLOT DATE	FILE NAME
ANSI B	22-May-13	LC 032.DWG

THIS DRAWING AND THE INFORMATION CONTAINED HEREIN ARE THE PROPERTY OF BEN C. GERWICK, INC. AND MAY NOT BE REPRODUCED, DISTRIBUTED, MODIFIED, REPOSITED OR OTHERWISE USED WITHOUT THE PERMISSION OF BCG INC.

SAMUEL X YAO
STATE OF WASHINGTON
REGISTERED PROFESSIONAL ENGINEER
5/23/2013

Washington State Department of Transportation

Klewit/General/Manson A Joint Venture

BEN C. GERWICK, INC. A CH2M Company

PROJECT NAME: SR 520 COFFERDAM

DRAWING TITLE: TANK PLAN

Sheet No. LC032

Sheet of

FILE LOCATION: P:\2012\2012-360\DRWG\STAMPED_LARGE COFFERDAM\DWG\LC032.DWG DATE: 5/22/2013 4:47:22 PM DRAFTSPERSON: JULIUS MACNILLO

Contract No.: 008066
Change Order No.: 108
Page 45 of 105

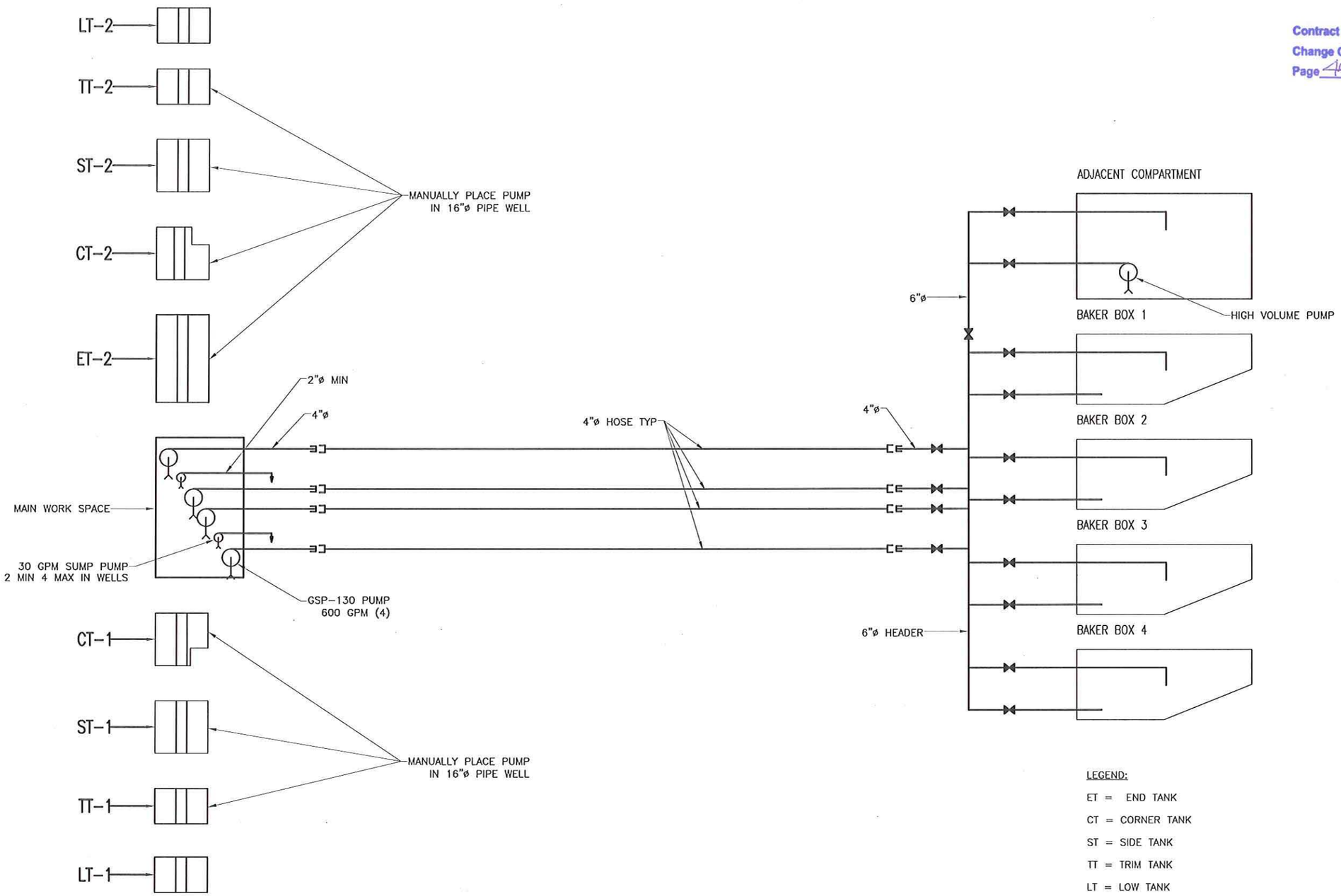

LEGEND:

ET = END TANK
CT = CORNER TANK
ST = SIDE TANK
TT = TRIM TANK
LT = LOW TANK

1 / – BALLAST WATER SYSTEM SCHEMATIC
SCALE: NTS

Rev.	Date	Description of Revision	Designed	Drawn	Checked

DESIGNED BY	CHECKED BY	DATE
SY	WCM	01/25/13
DRAWN BY	PLOT SCALE	PROJECT NUMBER
JUSA		
SIZE	PLOT DATE	FILE NAME
ANSI B	22-May-13	LC033.DWG

THIS DRAWING AND THE INFORMATION CONTAINED HEREIN ARE THE PROPERTY OF BEN C. GERWICK, INC. AND MAY NOT BE REPRODUCED, DISTRIBUTED, MODIFIED, REPOSTED, OR OTHERWISE USED WITHOUT THE PERMISSION OF BCG INC.

SAMUEL X. YAO — STATE OF WASHINGTON — 46791 — REGISTERED PROFESSIONAL ENGINEER — 5/23/2013

Washington State Department of Transportation

Kiewit/General/Manson A Joint Venture

BEN C. GERWICK, INC. A COWI Company

PROJECT NAME: SR 520 COFFERDAM

DRAWING TITLE: BALLAST WATER SYSTEM SCHEMATIC

Sheet No. LC033

Sheet of

FILE LOCATION: H:\2012\2012-009\NON\STAMPED_LATEST COFFERDAM\NON\LC033.DWG DATE: 5/22/2013 4:46:13 PM DRAFTSPERSON: JULIUS BACRILLO

"T" PONTOON

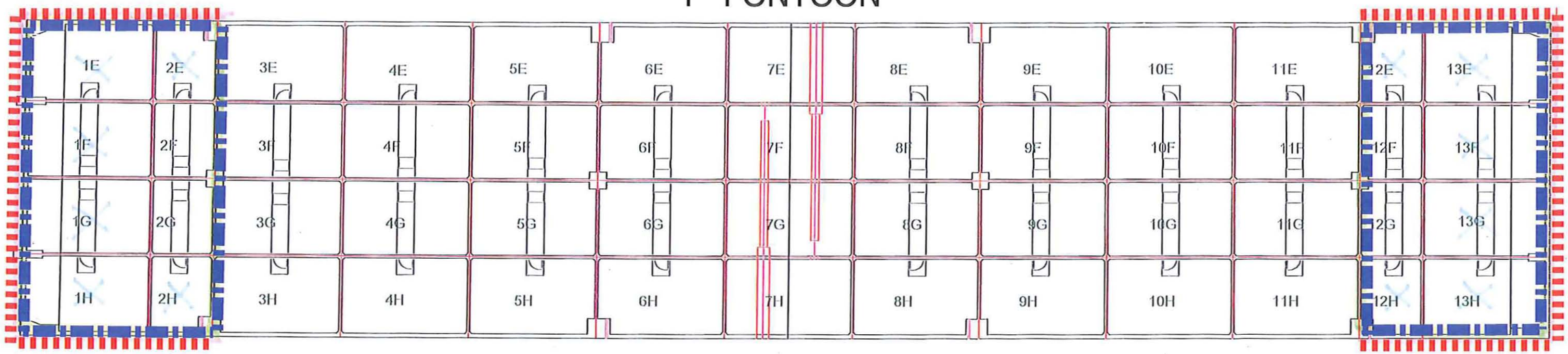

Limits of keel slab and top deck inspection

Exterior wall inspection

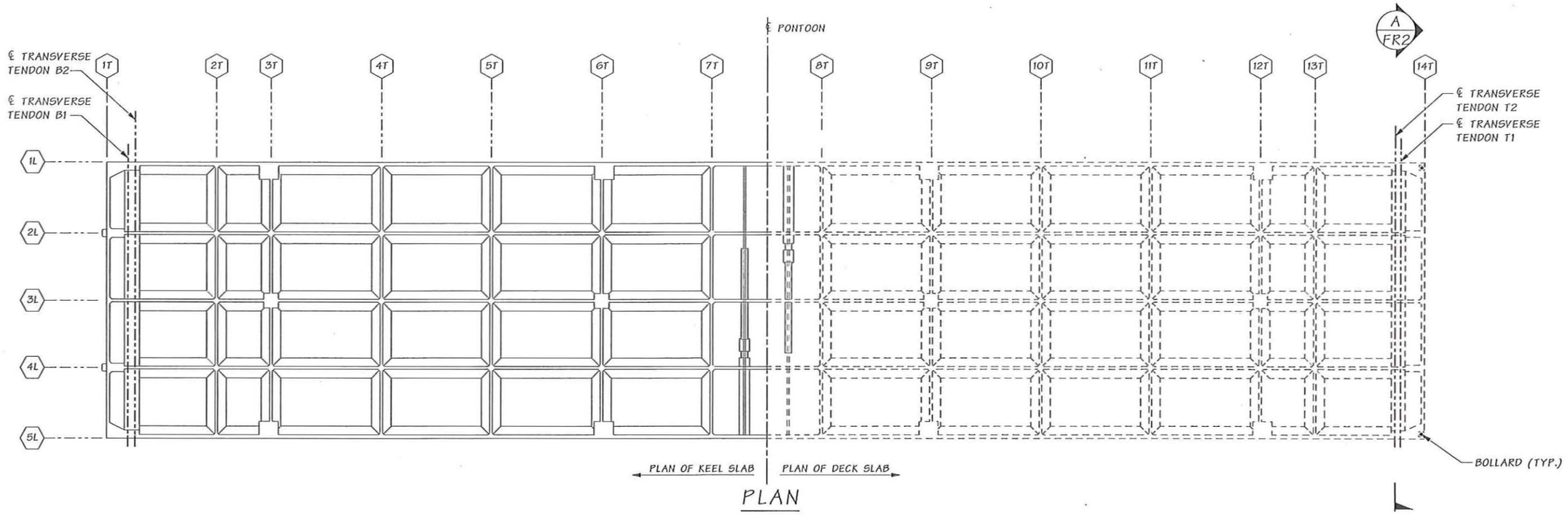

PLAN

PONTOON TYPE 1
SYMM. ABOUT ℄ PONTOON

GENERAL NOTES

1. ALL MATERIALS AND WORKMANSHIP SHALL BE IN ACCORDANCE WITH THE REQUIREMENTS OF THE WASHINGTON STATE DEPARTMENT OF TRANSPORTATION STANDARD SPECIFICATIONS FOR ROAD, BRIDGE AND MUNICIPAL CONSTRUCTION DATED 2012, AND AMENDMENTS.
2. THIS RETROFIT IS FOR THE FIRST, SECOND AND THIRD LONGITUDINAL PONTOONS CONSTRUCTED AS PART OF CONTRACT 7826.
3. ANCHOR BLOCK CONCRETE SHALL ATTAIN A MINIMUM COMPRESSIVE STRENGTH OF 5.0 KSI PRIOR TO STRESSING TRANSVERSE TENDONS. SELF-CONSOLIDATING CONCRETE IS ACCEPTABLE FOR THE ANCHOR BLOCKS.
4. ANCHOR ENCASEMENT CONCRETE SHALL BE PER CHAPTER 2.12 OF THE RFP TECHINCAL REQUIREMENTS.
5. EXISTING FEATURES AND DIMENSIONS ARE BASED ON THE ORIGINAL CONSTRUCTION DOCUMENTS. ALL DIMENSIONS NOTED WITH AN ASTERISK (*) SHALL BE FIELD MEASURED BY THE CONTRACTOR PRIOR TO ORDERING MATERIALS AND PROCEEDING WITH CONSTRUCTION.
6. THE SURFACE WITHIN THE LIMITS OF THE ANCHOR ENCASEMENTS AND ANCHOR BLOCKS SHALL BE ROUGHENED TO A ¼" AMPLITUDE. SEE RFP SECTION 2.12.5.10.7 FOR REQUIREMENTS FOR ROUGHENING HARDENED CONCRETE SURFACES.
7. BARS DESIGNATED AS "DOWELS" SHALL BE DRILLED AND RESIN BONDED INTO THE EXISTING STRUCTURE. THE HOLE DIAMTER SHALL BE PER MANUFACTURER'S RECOMMENDATION. EXISTING REINFORCEMENT SHALL BE LOCATED PRIOR TO DRILLING. CORE DRILLING IS NOT PERMITTED.
8. THE MINIMUM EMBEDMENT DEPTH FOR DOWEL BARS SHALL BE AS FOLLOWS:

BAR SIZE	MIN. EMBED.
#4	7"
#6	9"
#7	11"

9. THE CONTRACTOR SHALL VERIFY ANY CONFLICT WITH THE LONGITUDINAL TENDONS, BOLTS, STEEL PIPES AND OTHER REINFORCEMENT. DOWELED IN REINFORCEMENT LOCATIONS SHALL BE ADJUSTED IN THE FIELD TO MISS THESE CONFLICTS.
10. THE DUCT FOR TRANSVERSE TENDONS SHALL BE INSTALLED PRIOR TO CASTING CONCRETE FOR THE ANCHOR BLOCKS.
11. THE CONCRETE ANCHOR BLOCK SHALL BE CONSIDERED MASS CONCRETE. AS SUCH, MEASURES SHALL BE TAKEN TO COPE WITH THE GENERATION OF HEAT FROM HYDRATION OF THE CEMENT AND ATTENDANT VOLUME CHANGE TO MINIMIZE CRACKING.
12. SEE APPENDIX M11 SHEETS FROM CONTRACT 7826 FOR NOTES AND DETAILS NOT SHOWN IN THESE SHEETS.

LEGEND

- 1 / FR6 — IDENTIFIES DETAIL
- B / FR6 — IDENTIFIES SECTION OR VIEW
  - TAKEN OR SHOWN ON BRIDGE SHEET FR15
- B / — TAKEN OR SHOWN ON THE SAME SHEET

Contract No.: 0080166
Change Order No.: 108
Page 47 of 105

SR 520 FILE NO. ____ SHEET FR1

Bridge Design Engr. Khaleghi, B	M:\W-Team\SR 520 FLOATING BRIDGE\CON 7826 CYCLE 1 BLOCK OPTION\window files\1 PLANS AND NOTES.wnd							
Supervisor				REGION NO.	STATE	FED. AID PROJ. NO.	SHEET NO.	TOTAL SHEETS
Designed By Stoddard, RB / Kapur, J 02/13				10	WASH.			
Checked By Bingle, J / Ferluga, EJ 02/13				JOB NUMBER				
Detailed By Avery, D 02/13								
Bridge Projects Engr.								
Prelim. Plan By								
Architect/Specialist	DATE	REVISION	BY	APP'D				

Thu Feb 14 16:21:11 2013

RICHARD B. STODDARD — STATE OF WASHINGTON — 18377 — PROFESSIONAL ENGINEER — 2/14/13

BRIDGE AND STRUCTURES OFFICE

JUGESH KAPUR — STATE OF WASHINGTON — 25430 — PROFESSIONAL ENGINEER — 2/14/13

Washington State Department of Transportation

SR 520
FLOATING BRIDGE & LANDINGS PROJECT
BOLT BEAM RETROFIT

PLAN AND NOTES

BRIDGE SHEET NO. FR1 SHEET OF SHEETS

Contract No.: 0080066
Change Order No.: 108
Page 48 of 105

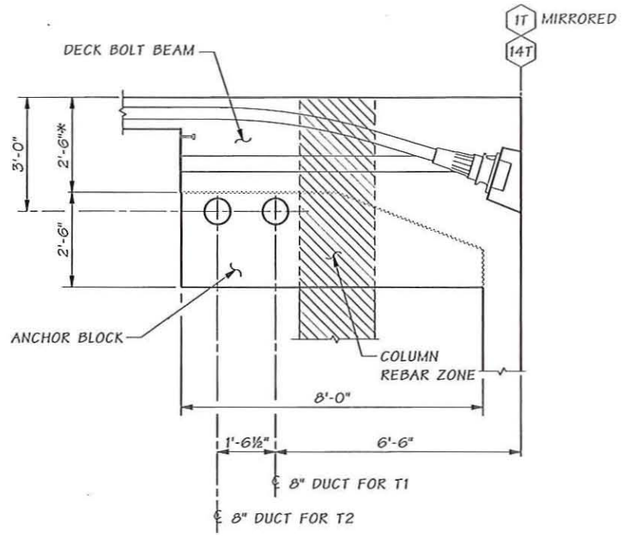

SECTION B

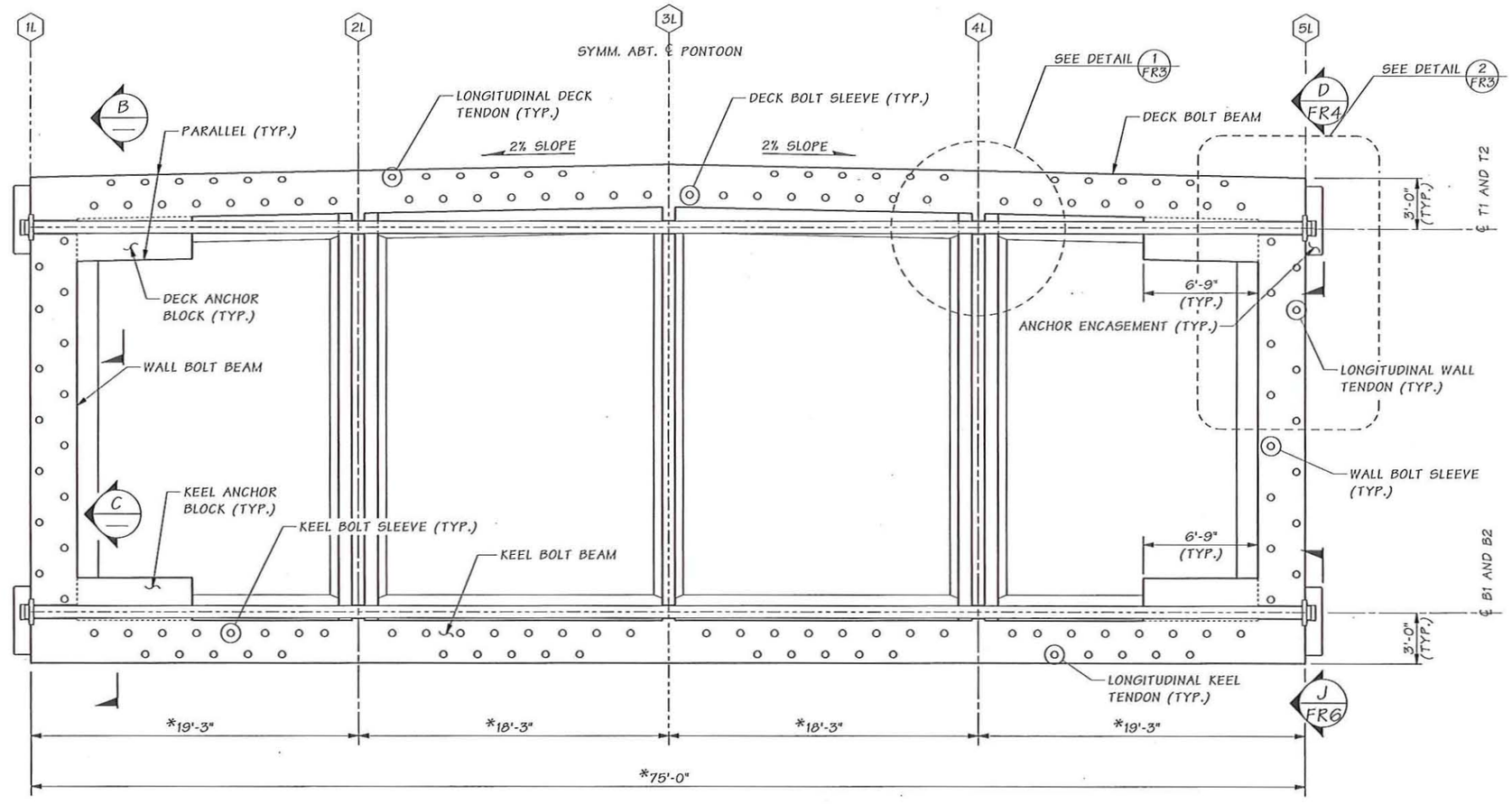

SECTION A FR1
WALL 14T SHOWN, WALL 1T SIMILAR

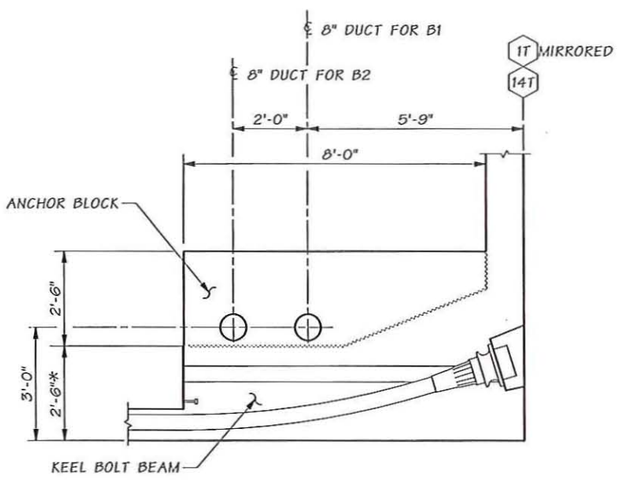

SECTION C

* SEE NOTE 5 ON BR. SHT. FR1

Bridge Design Engr. Khaleghi, B	M:\W-Team\SR 520 FLOATING BRIDGE\CON 7826 CYCLE 1 BLOCK OPTION\window files\2 TYPICAL SECTION.WND							
Supervisor				REGION NO.	STATE	FED. AID PROJ. NO.	SHEET NO.	TOTAL SHEETS
Designed By Stoddard, RB / Kapur, J 02/13				10	WASH.			
Checked By Bingle, J / Ferluga, EJ 02/13				JOB NUMBER				
Detailed By Avery, D 02/13								
Bridge Projects Engr.								
Prelim. Plan By								
Architect/Specialist	DATE	REVISION	BY	APP'D				

Thu Feb 14 16:21:13 2013

RICHARD B. STODDARD STATE OF WASHINGTON 15400 PROFESSIONAL ENGINEER 2/14/13

BRIDGE AND STRUCTURES OFFICE

JUGESH KAPUR STATE OF WASHINGTON 15400 PROFESSIONAL ENGINEER 2/14/13

Washington State Department of Transportation

SR 520
FLOATING BRIDGE & LANDINGS PROJECT
BOLT BEAM RETROFIT

TYPICAL SECTION

BRIDGE SHEET NO. FR2
SHEET OF SHEETS

SR 520 FILE NO. ____ SHEET FR2

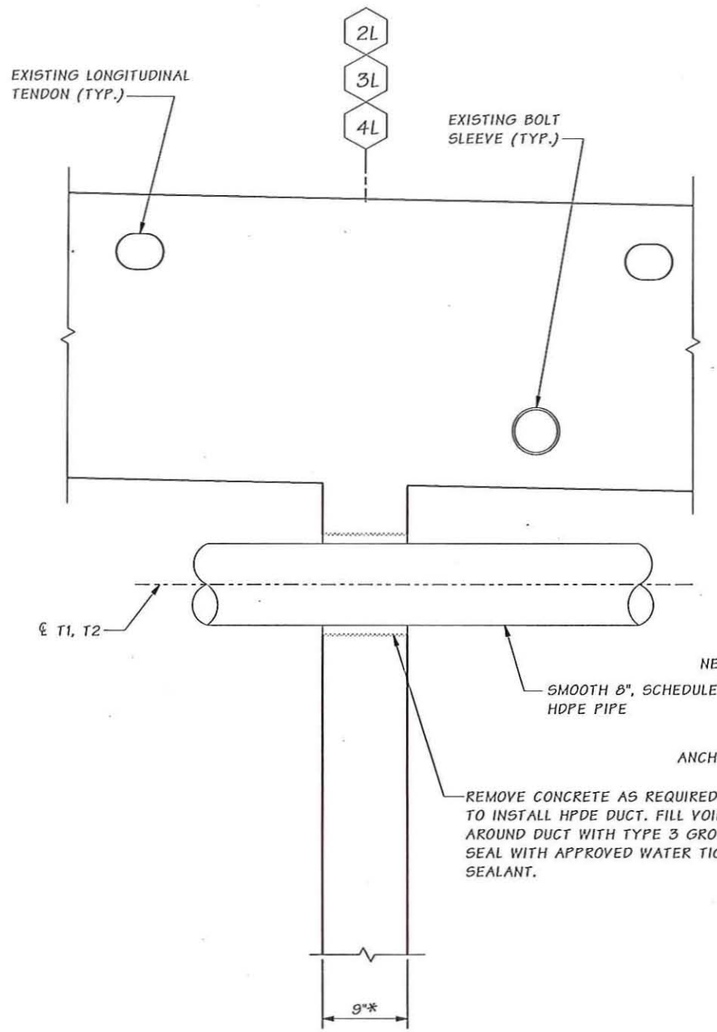

DETAIL 1 FR2

DECK BOLT BEAM SHOWN, KEEL BOLT BEAM SIMILAR.

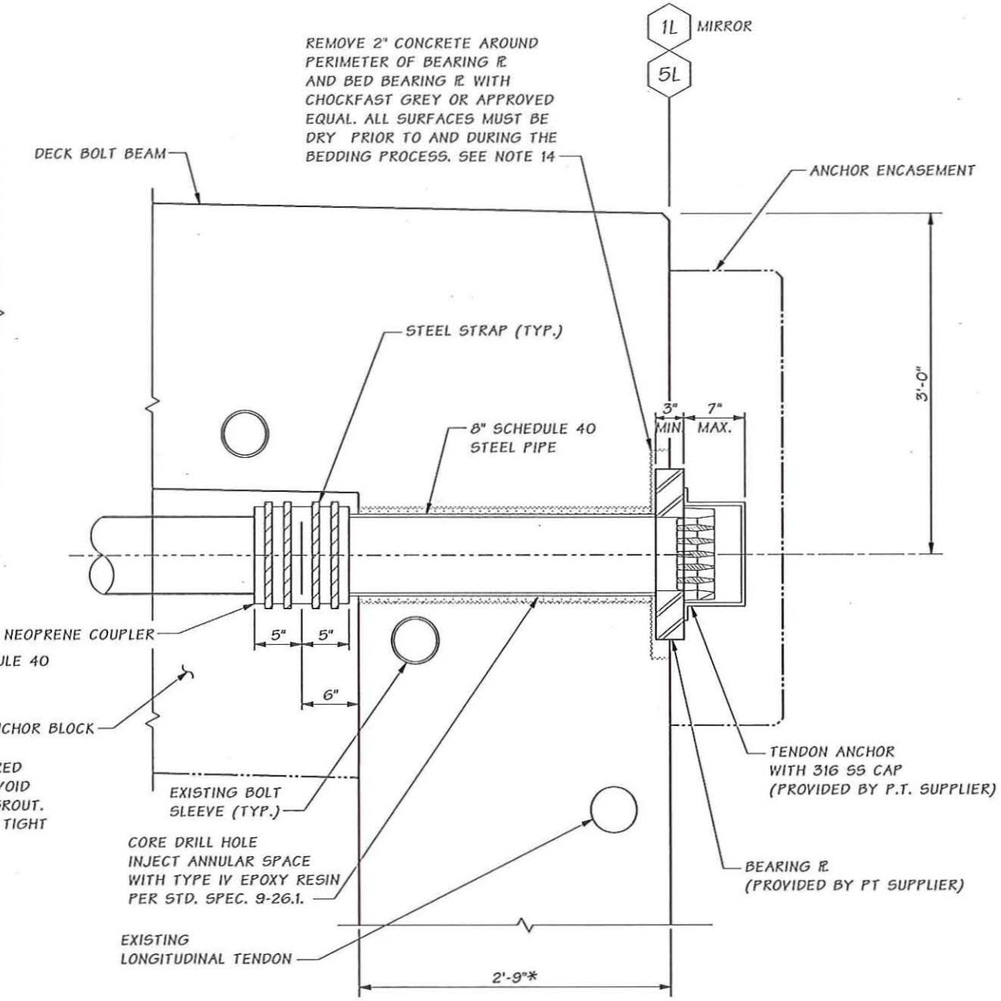

DETAIL 2 FR2

DECK BOLT BEAM SHOWN, KEEL BOLT BEAM SIMILAR.

TRANSVERSE POST-TENSIONING NOTES

1. THE TRANSVERSE TENDONS CALLED OUT ON THIS SHEET ARE PROVIDED TO CLOSE AND PREVENT PROPAGATION OF EXISTING VERTICAL CRACKS IN THE KEEL AND DECK BOLT BEAMS THAT OCCURRED DURING CONSTRUCTION AND HANDLING OF THE PONTOONS. THE TRANSVERSE TENDONS ARE NOT DESIGNED TO CLOSE OR PREVENT PROPAGATION OF CRACKING AT OTHER LOCATIONS IN THE PONTOONS RESULTING FROM STRAINS INDUCED BY TIME-DEPENDANT EFFECTS.
2. THE TENDONS ARE SIZED TO PROVIDE 500 PSI OF COMPRESSION IN THE BOLT BEAMS. EFFECTIVENESS OF THIS ADDED TRANSVERSE COMPRESSION HAS BEEN EVALUATED FOR THE FLOATING PONTOONS.
3. THE BOUNDARY CONDITIONS FOR A FLOATING PONTOON ASSUME A WATER DENSITY OF 62.4 LB/FT³.
4. THE MINIMUM COMPRESSIVE STRENGTH OF THE PONTOON CONCRETE AT THE TIME OF POST-TENSIONING SHALL BE 7.5 KSI.
5. THE CONTRACTOR SHALL SUPPORT THE DUCT SUCH THAT EACH DUCT MAINTAINS THE REQUIRED, LEVEL PROFILE WITHIN A PLACEMENT TOLERANCE OF PLUS OR MINUS ⅛" DURING ALL PHASES OF WORK.
6. THE MINIMUM PRESTRESSING LOAD AFTER SEATING AND THE MINIMUM NUMBER OF PRESTRESSING STRANDS SHALL BE AS SHOWN IN THE POST-TENSIONING TABLE. "LIVE END" REFERS TO THE END WHERE JACKING OCCURS. "DEAD END" REFERS TO THE END WHERE JACKING DOES NOT OCCUR.
7. THE DESIGN IS BASED ON 0.6 INCH DIAMETER LOW RELAXATION STRANDS, AN ANCHOR SET OF ⅜ INCH, A CURVATURE FRICTION COEFFICIENT OF μ = 0.15, A WOBBLE COEFFICIENT, K = 0.0002 /FT, AND THE JACKING LOAD SHOWN IN THE POST-TENSIONING TABLE. THE ACTUAL ANCHOR SET AND JACKING FORCE USED BY THE CONTRACTOR SHALL BE SPECIFIED IN THE SHOP PLANS AND INCLUDED IN THE TRANSFER FORCE CALCULATIONS.
8. THE ADDITIONAL PRESTRESS LOSS SHOWN IN THE POST-TENSIONING TABLE IS ESTIMATED AND CAUSED BY STRAND RELAXATION, ELASTIC SHORTENING, CREEP AND SHRINKAGE OF CONCRETE.
9. TENDONS T1 AND T2 SHALL BE STRESSED FROM ALTERNATE ENDS. TENDONS B1 AND B2 SHALL BE STRESSED FROM ALTERNATE ENDS.
10. THE PRESTRESSING LOAD LISTED IN THE POST-TENSIONING TABLE ARE PER TENDON.
11. THE SURFACE WITHIN THE LIMITS OF THE ANCHOR ENCASEMENTS AND ANCHORAGE ASSEMBLY SHALL BE COATED WITH AN EPOXY-BONDING AGENT PER RFP SECTION 2.12.5.10.11 PRIOR TO CASTING ENCASEMENT CONCRETE.
12. BEARING PLATE AND PIPE SHALL BE COATED WITH INORGANIC ZINC PRIMER.
13. THE BEDDING MATERIAL FOR BEARING PLATE SHALL HAVE A MINIMUM COMPRESSIVE STRENGTH OF 7.5 KSI AT THE TIME OF TENDON STRESSING.

Contract No.: 008066
Change Order No.: 108
Page 49 of 105

* SEE NOTE 5 ON BRIDGE SHEET FR1

POST-TENSIONING TABLE

TENDON NUMBER AND SEQUENCE	NUMBER OF 0.6" STRANDS PER TENDON	PRESTRESSING LOAD (KIPS)			TENDON ELONGATION
		JACKING (SEE NOTE 11)	AFTER SEATING LIVE END (SEE NOTE 11)	AFTER SEATING DEAD END (SEE NOTE 11)	ADDITIONAL PRESTRESS LOSS (KSI) (SEE NOTE 9)
T1, T2, B1, B2	26	1142	1075	1092	9

SR 520 FILE NO. ____ SHEET FR3

Bridge Design Engr. Khaleghi, B	H:\W-Team\SR 520 FLOATING BRIDGE\CON 7826 CYCLE 1 BLOCK OPTION\window files\3 DETAILS.WND				REGION NO.	STATE	FED. AID PROJ. NO.	SHEET NO.	TOTAL SHEETS
Supervisor					10	WASH.			
Designed By Stoddard, RB / Kapur, J 02/13					JOB NUMBER				
Checked By Bingle, J / Ferluga, EJ 02/13									
Detailed By Avery, D 02/13									
Bridge Projects Engr.									
Prelim. Plan By									
Architect/Specialist	DATE	REVISION	BY	APP'D					

Thu Feb 14 16:24:58 2013

BRIDGE AND STRUCTURES OFFICE 2/14/13 2/14/13

Washington State Department of Transportation

SR 520
FLOATING BRIDGE & LANDINGS PROJECT
BOLT BEAM RETROFIT

DUCT AND ANCHORAGE DETAILS

BRIDGE SHEET NO. FR3 OF SHEETS

Contract No.: 008066
Change Order No.: 108
Page 50 of 105

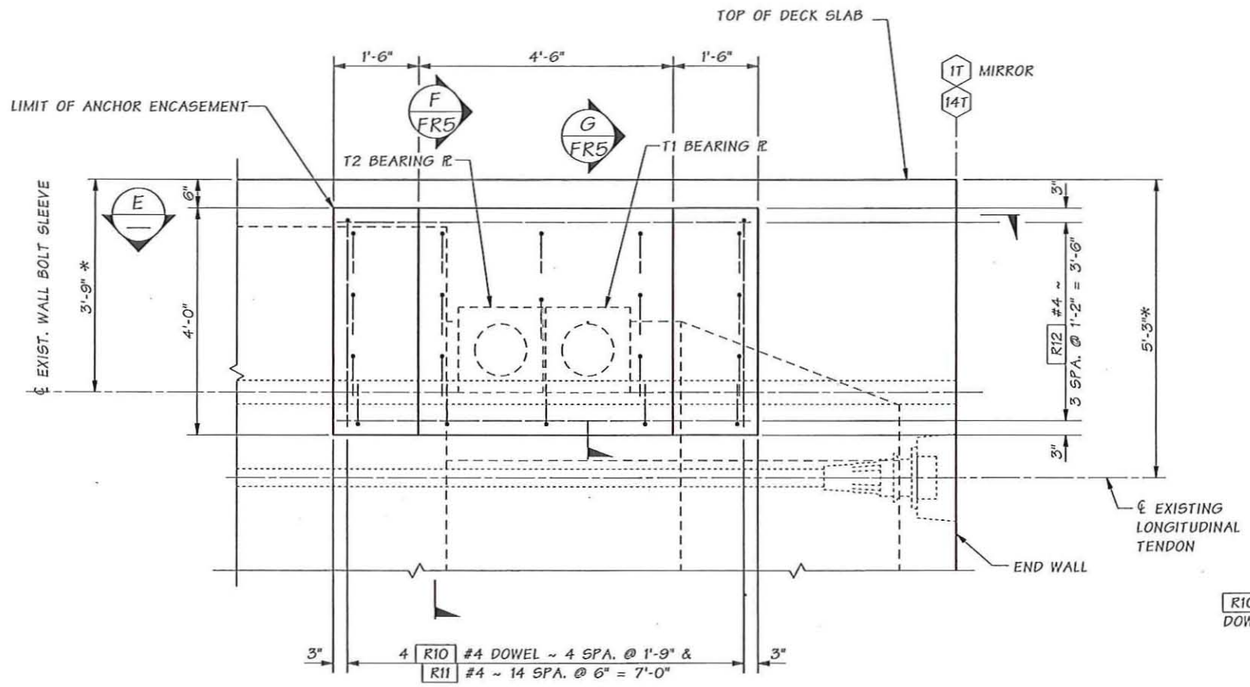

SECTION D / FR2

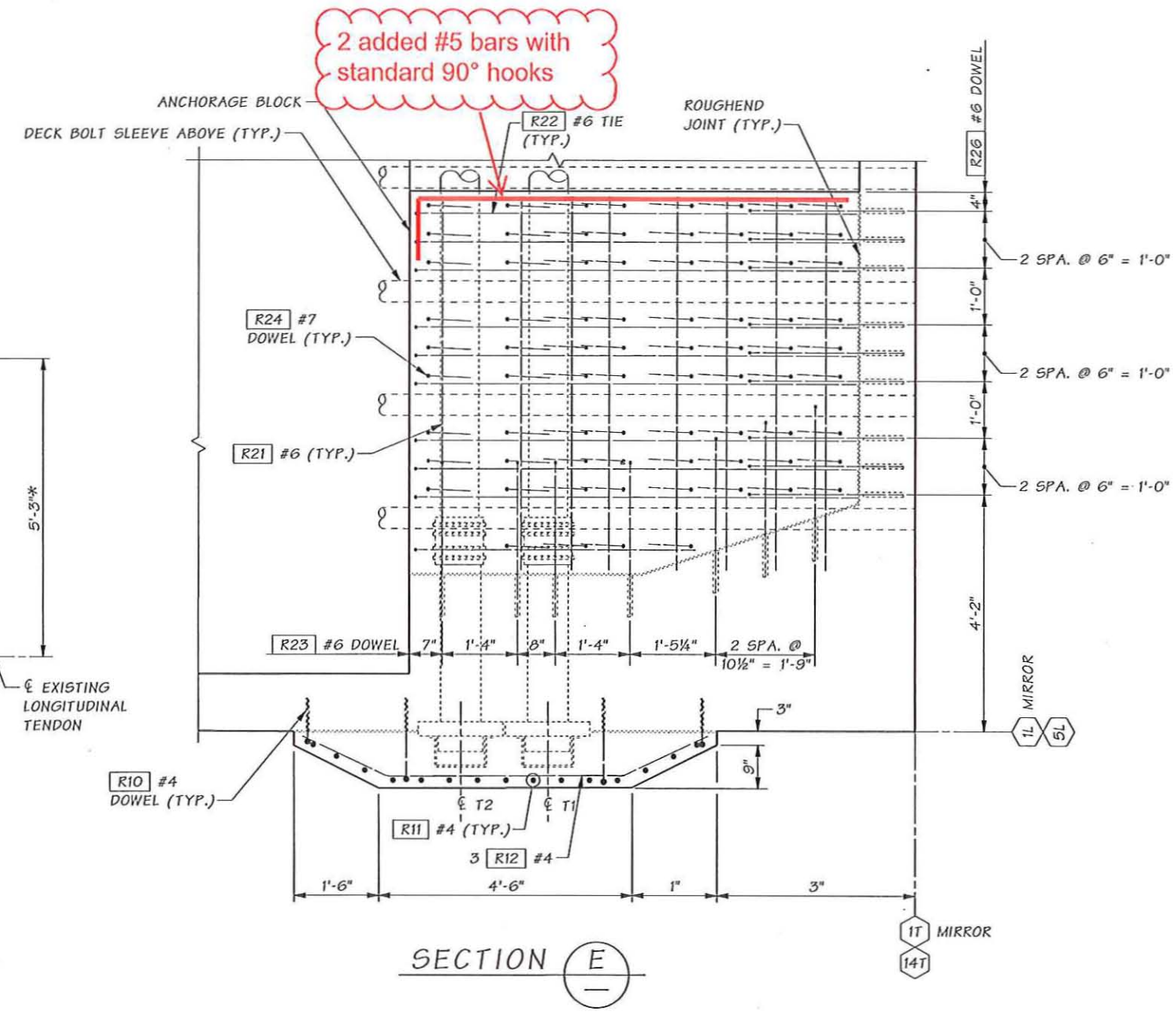

SECTION E

* SEE NOTE 5 ON BR. SHT. FR1

SR 520 FILE NO. ____ SHEET FR4

Bridge Design Engr. Khaleghi, B	M:\W-Team\SR 520 FLOATING BRIDGE\CON 7826 CYCLE 1 BLOCK OPTION\window files\4 DECK ANCHOR 1.wnd								
Supervisor					REGION NO.	STATE	FED. AID PROJ. NO.	SHEET NO.	TOTAL SHEETS
Designed By Stoddard, RB / Kapur, J 02/13					10	WASH.			
Checked By Bingle, J / Ferluga, EJ 02/13					JOB NUMBER				
Detailed By Avery, D 02/13									
Bridge Projects Engr.									
Prelim. Plan By									
Architect/Specialist	DATE	REVISION	BY	APP'D					

Thu Feb 14 10:21:18 2013

RICHARD B. STODDARD — STATE OF WASHINGTON — PROFESSIONAL ENGINEER — 2/14/13

BRIDGE AND STRUCTURES OFFICE

JUGESH KAPUR — STATE OF WASHINGTON — PROFESSIONAL ENGINEER — 2/14/13

Washington State Department of Transportation

SR 520
FLOATING BRIDGE & LANDINGS PROJECT
BOLT BEAM RETROFIT

DECK ANCHOR BLOCK & ENCASEMENT DETAILS 1 OF 2

BRIDGE SHEET NO. FR4

SHEET ___ OF ___ SHEETS

Contract No.: 008066
Change Order No.: 108
Page 51 of 105

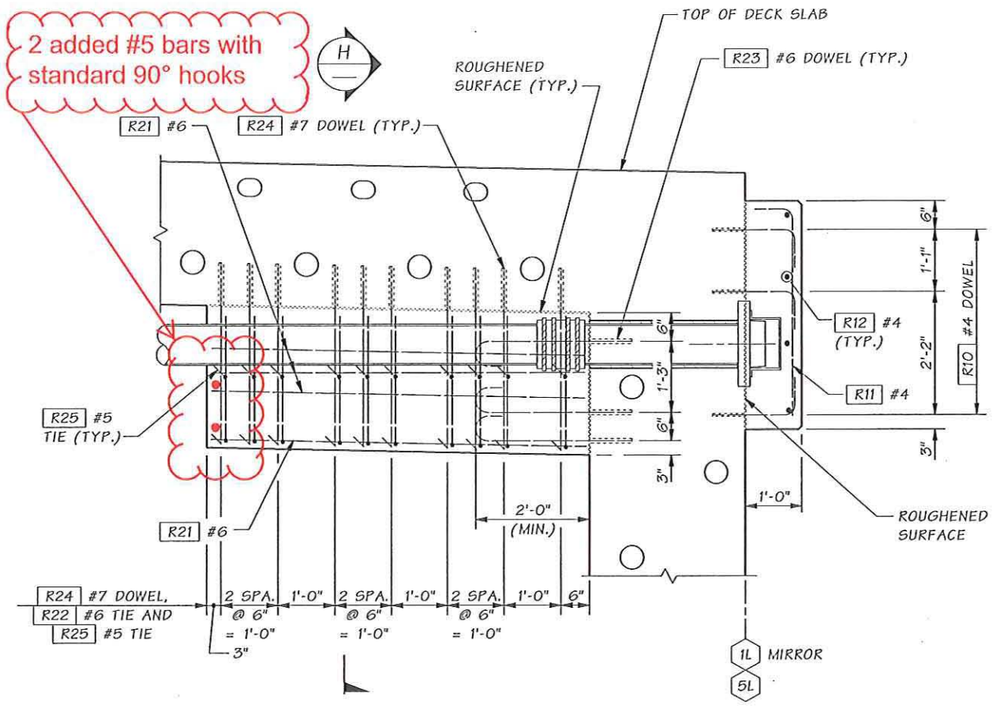

SECTION F
AT BEARING ℄ FR4

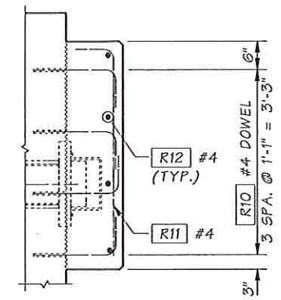

SECTION G
AWAY FROM BEARING ℄ FR4

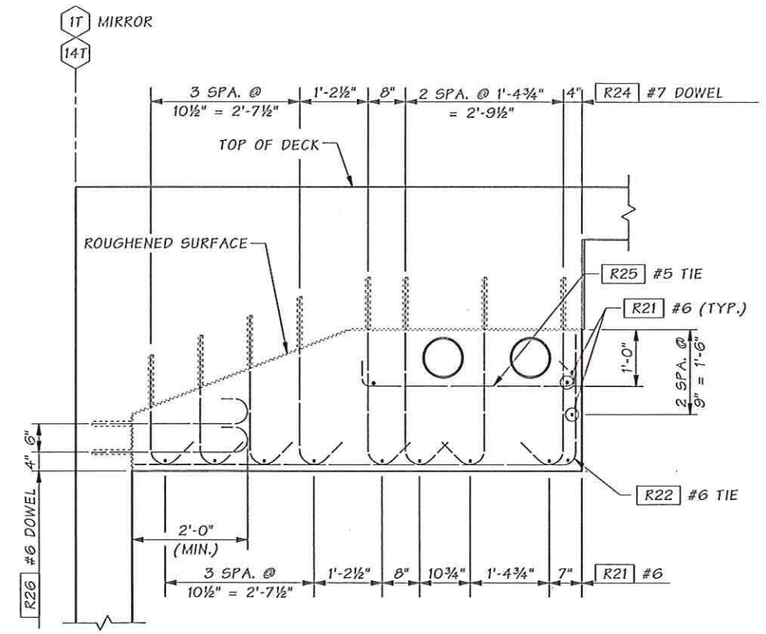

SECTION H

Bridge Design Engr. Khaleghi, B	M:\W-Team\SR 520 FLOATING BRIDGE\CON 7826 CYCLE 1 BLOCK OPTION\window files\5 DECK ANCHOR 2.wnd								
Supervisor					REGION NO.	STATE	FED. AID PROJ. NO.	SHEET NO.	TOTAL SHEETS
Designed By Stoddard, RB / Kapur, J 02/13					10	WASH.			
Checked By Bingle, J / Ferluga, EJ 02/13									
Detailed By Avery, D 02/13					JOB NUMBER				
Bridge Projects Engr.									
Prelim. Plan By									
Architect/Specialist	DATE	REVISION	BY	APP'D					

Thu Feb 14 10:21:18 2013

RICHARD B. SIONG — STATE OF WASHINGTON — PROFESSIONAL ENGINEER — 2/14/13

BRIDGE AND STRUCTURES OFFICE

JUGESH KAPUR — STATE OF WASHINGTON — PROFESSIONAL ENGINEER — 2/14/13

Washington State Department of Transportation

SR 520
FLOATING BRIDGE & LANDINGS PROJECT
BOLT BEAM RETROFIT

DECK ANCHOR BLOCK & ENCASEMENT DETAILS 2 OF 2

BRIDGE SHEET NO. FR5
SHEET OF SHEETS

SR 520 FILE NO. ____ SHEET FR5

Contract No.: 008066
Change Order No.: 108
Page 52 of 105

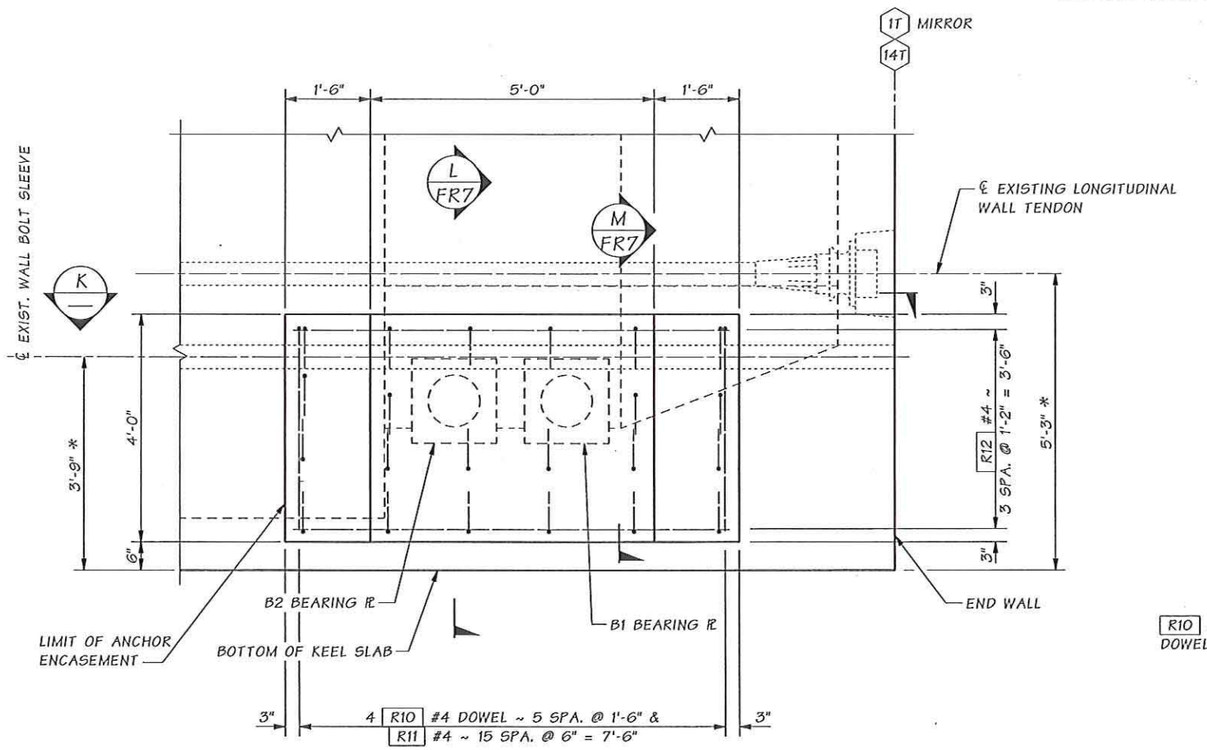

SECTION J / FR2

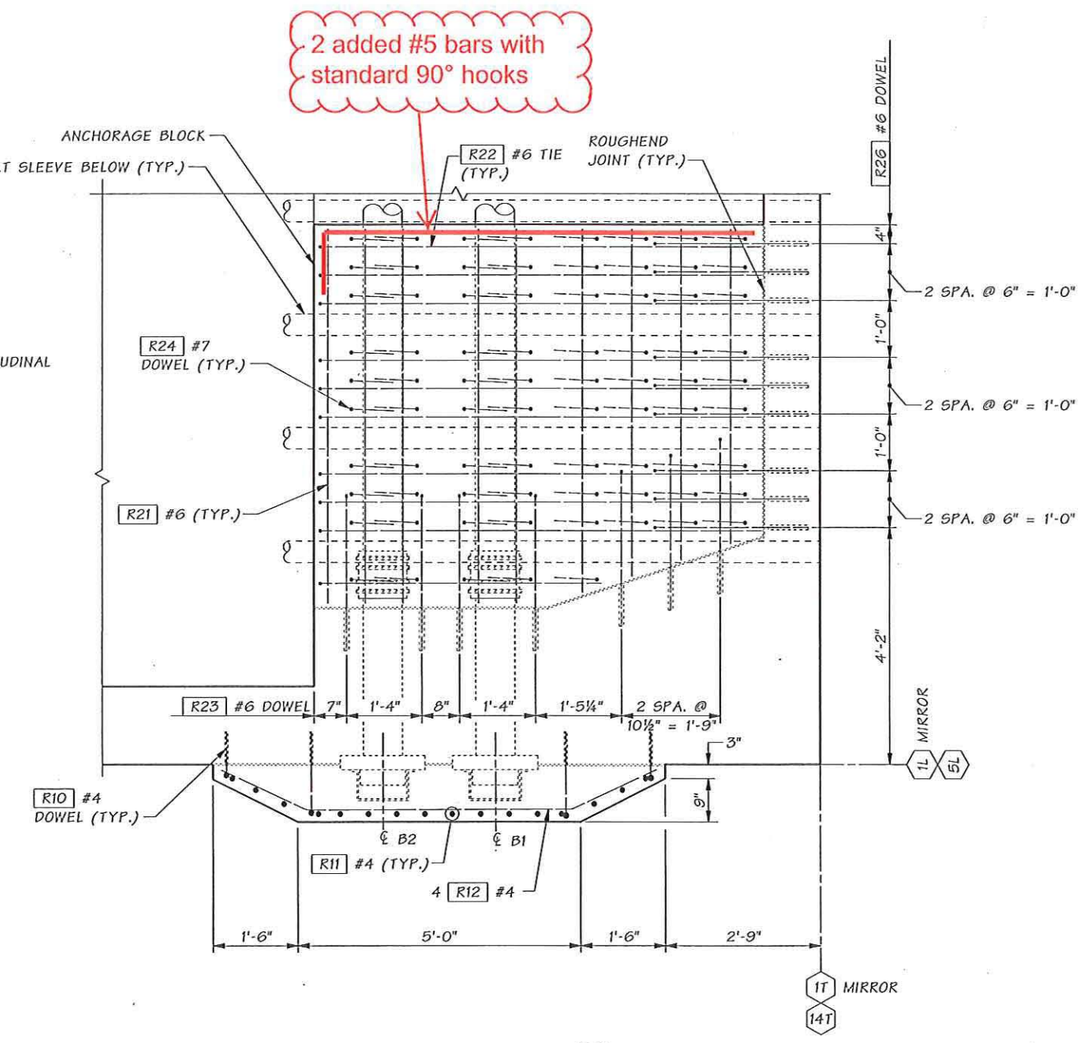

SECTION K / —

* SEE NOTE 5 ON BR. SHT. FR1

SR 520 FILE NO. ____ SHEET FR6

Bridge Design Engr. Khaleghi, B	M:\W-Team\SR 520 FLOATING BRIDGE\CON 7826 CYCLE 1 BLOCK OPTION\window files\6 KEEL ANCHOR 1.wnd				REGION NO.	STATE	FED. AID PROJ. NO.	SHEET NO.	TOTAL SHEETS
Supervisor					10	WASH.			
Designed By Stoddard, RB / Kapur, J 02/13					JOB NUMBER				
Checked By Bingle, J / Ferluga, EJ 02/13									
Detailed By Avery, D 02/13									
Bridge Projects Engr.									
Prelim. Plan By									
Architect/Specialist	DATE	REVISION	BY	APP'D					

Thu Feb 14 16:21:20 2013

RICHARD B. STODDARD STATE OF WASHINGTON PROFESSIONAL ENGINEER 2/14/13

BRIDGE AND STRUCTURES OFFICE

JUGDISH KAPUR STATE OF WASHINGTON PROFESSIONAL ENGINEER 2/14/13

Washington State Department of Transportation

SR 520
FLOATING BRIDGE & LANDINGS PROJECT
BOLT BEAM RETROFIT

KEEL ANCHOR BLOCK & ENCASEMENT DETAILS 1 OF 2

BRIDGE SHEET NO. FR6
SHEET OF SHEETS

Contract No.: 0080066
Change Order No.: 108
Page 53 of 105

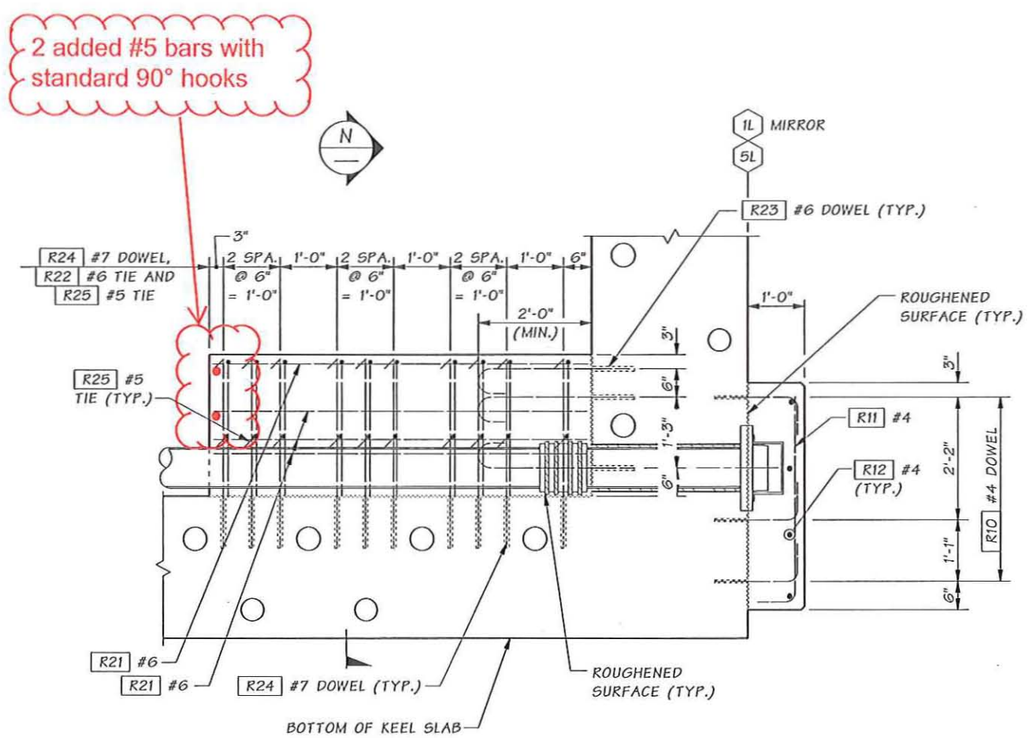

SECTION L
AT BEARING ℄ FR6

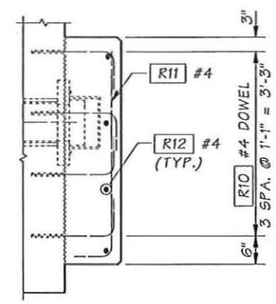

SECTION M
AWAY FROM BEARING ℄ FR6

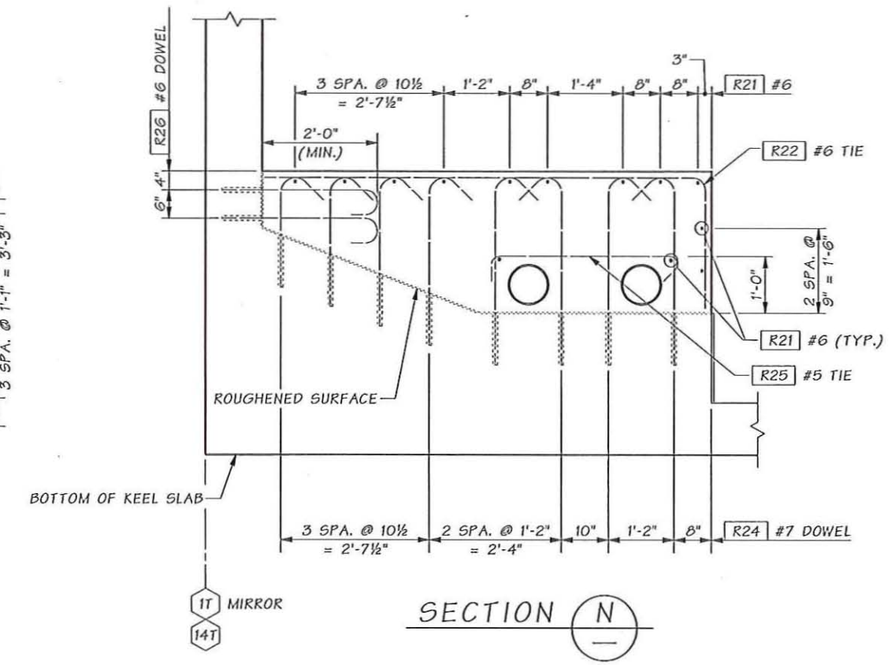

SECTION N

Bridge Design Engr. Khaleghi, B	M:\W-Team\SR 520 FLOATING BRIDGE\CON 7826 CYCLE 1 BLOCK OPTION\window files\7 KEEL ANCHOR 2.wnd							
Supervisor				REGION NO.	STATE	FED. AID PROJ. NO.	SHEET NO.	TOTAL SHEETS
Designed By Stoddard, RB / Kapur, J 02/13				10	WASH.			
Checked By Bingle, J / Ferluga, EJ 02/13								
Detailed By Avery, D 02/13				JOB NUMBER				
Bridge Projects Engr.								
Prelim. Plan By								
Architect/Specialist	DATE	REVISION	BY	APP'D				

Thu Feb 14 10:21:21 2013

RICHARD B. STODDARD — STATE OF WASHINGTON — PROFESSIONAL ENGINEER — 2/14/13

BRIDGE AND STRUCTURES OFFICE

JUGESH KAPUR — STATE OF WASHINGTON — PROFESSIONAL ENGINEER — 2/14/13

Washington State Department of Transportation

SR 520
FLOATING BRIDGE & LANDINGS PROJECT
BOLT BEAM RETROFIT

KEEL ANCHOR BLOCK & ENCASEMENT DETAILS 2 OF 2

BRIDGE SHEET NO. FR7
SHEET OF SHEETS

SR 520 FILE NO. ____ SHEET FR7

Contract No.: 0080066
Change Order No.: 108
Page 54 of 105

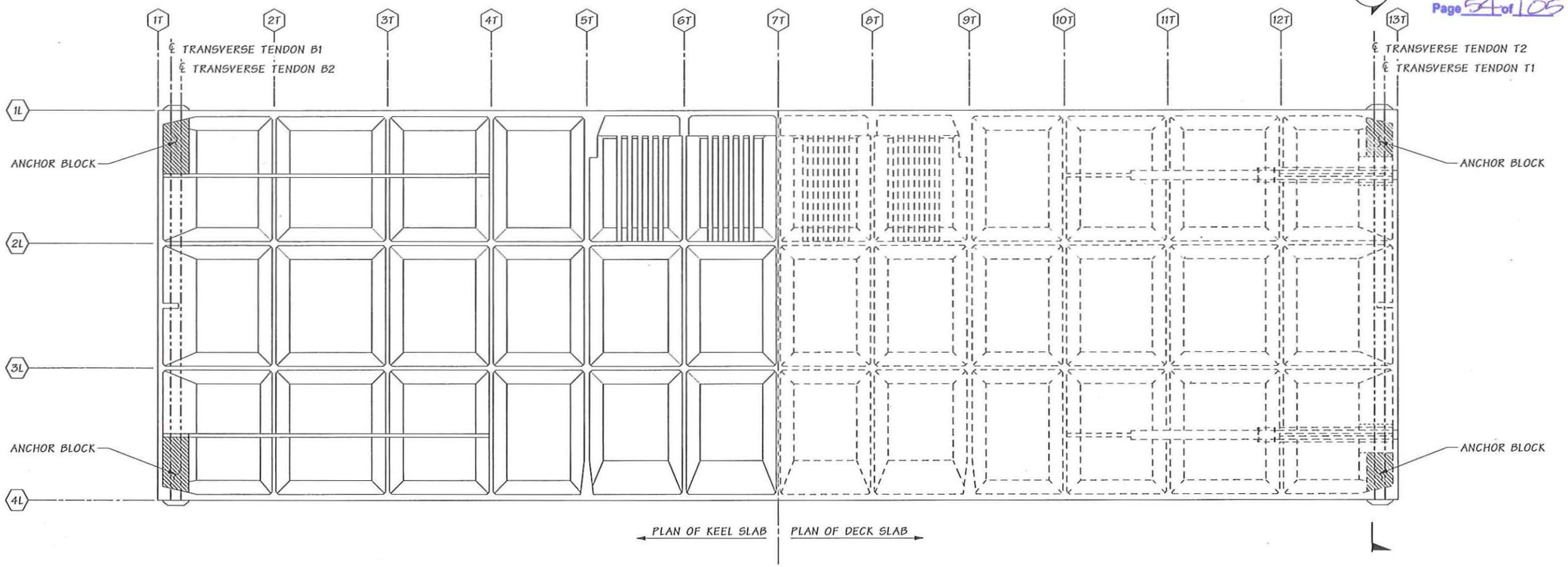

PLAN

PONTOON TYPE 3A

GENERAL NOTES

1. ALL MATERIALS AND WORKMANSHIP SHALL BE IN ACCORDANCE WITH THE REQUIREMENTS OF THE WASHINGTON STATE DEPARTMENT OF TRANSPORTATION STANDARD SPECIFICATIONS FOR ROAD, BRIDGE AND MUNICIPAL CONSTRUCTION DATED 2012, AND AMENDMENTS.
2. THIS RETROFIT IS FOR PONTOON TYPE 3A CONSTRUCTED AS PART OF CONTRACT 8066.
3. ANCHOR BLOCK CONCRETE SHALL ATTAIN A MINIMUM COMPRESSIVE STRENGTH OF 5.0 KSI PRIOR TO STRESSING TRANSVERSE TENDONS. SELF-CONSOLIDATING CONCRETE IS ACCEPTABLE FOR THE ANCHOR BLOCKS.
4. ANCHOR ENCASEMENT CONCRETE SHALL BE PER CHAPTER 2.12 OF THE RFP TECHINCAL REQUIREMENTS.
5. EXISTING FEATURES AND DIMENSIONS ARE BASED ON THE ORIGINAL CONSTRUCTION DOCUMENTS. ALL DIMENSIONS NOTED WITH AN ASTERISK (*) SHALL BE FIELD MEASURED BY THE CONTRACTOR PRIOR TO ORDERING MATERIALS AND PROCEEDING WITH CONSTRUCTION.
6. THE SURFACE WITHIN THE LIMITS OF THE ANCHOR ENCASEMENTS AND ANCHOR BLOCKS SHALL BE ROUGHENED TO A ¼" AMPLITUDE. SEE RFP SECTION 2.12.5.10.7 FOR REQUIREMENTS FOR ROUGHENING HARDENED CONCRETE SURFACES.
7. BARS DESIGNATED AS "DOWELS" SHALL BE DRILLED AND RESIN BONDED INTO THE EXISTING STRUCTURE. THE HOLE DIAMTER SHALL BE PER MANUFACTURER'S RECOMMENDATION. EXISTING REINFORCEMENT SHALL BE LOCATED PRIOR TO DRILLING. CORE DRILLING IS NOT PERMITTED.
8. THE MINIMUM EMBEDMENT DEPTH FOR DOWEL BARS SHALL BE AS FOLLOWS, OR AS LISTED BY RESIN MANUFACTURER TO SATISFY THE ULTIMATE TENSILE STRENGTH OF THE DOWEL BAR.

BAR SIZE	MIN. EMBED.
#4	7"
#5	8"

9. THE CONTRACTOR SHALL VERIFY ANY CONFLICT WITH THE LONGITUDINAL TENDONS, BOLTS, STEEL PIPES AND OTHER REINFORCEMENT. DOWELED IN REINFORCEMENT LOCATIONS SHALL BE ADJUSTED IN THE FIELD TO MISS THESE CONFLICTS.
10. THE DUCT FOR TRANSVERSE TENDONS SHALL BE INSTALLED PRIOR TO CASTING CONCRETE FOR THE ANCHOR BLOCKS.
11. THE CONCRETE ANCHOR BLOCK SHALL BE CONSIDERED MASS CONCRETE. AS SUCH, MEASURES SHALL BE TAKEN TO COPE WITH THE GENERATION OF HEAT FROM HYDRATION OF THE CEMENT AND ATTENDANT VOLUME CHANGE TO MINIMIZE CRACKING.
12. SEE APPENDIX M11 SHEETS FROM CONTRACT 7826 FOR NOTES AND DETAILS NOT SHOWN IN THESE SHEETS.

LEGEND

- 1 / WR6 — IDENTIFIES DETAIL
- B / WR6 — IDENTIFIES SECTION OR VIEW
- TAKEN OR SHOWN ON BRIDGE SHEET WR6
- B / — TAKEN OR SHOWN ON THE SAME SHEET

SR 520 FILE NO. ____ SHEET wr1

Bridge Design Engr. Khaleghi, B	M:\W-Team\SR 520 FLOATING BRIDGE\TYPE 3A TRANS PT RETROFIT\window files\1 PLAN & NOTES.wnd								
Supervisor					REGION NO.	STATE	FED. AID PROJ. NO.	SHEET NO.	TOTAL SHEETS
Designed By Stoddard, RB / Kapur, J 02/13					10	WASH.			
Checked By Ferluga, E/ Bingle, J 02/13									
Detailed By Puryear, D 02/13					JOB NUMBER				
Bridge Projects Engr.									
Prelim. Plan By									
Architect/Specialist	DATE	REVISION	BY	APP'D					

Mon Feb 25 13:05:11 2013

RICHARD B. STODDARD — STATE OF WASHINGTON — 18207 — PROFESSIONAL ENGINEER — 2/25/13

BRIDGE AND STRUCTURES OFFICE

JUGESH KAPUR — STATE OF WASHINGTON — 2/25/13 — PROFESSIONAL ENGINEER

Washington State Department of Transportation

SR 520
FLOATING BRIDGE AND LANDINGS PROJECT
TRANSVERSE POST-TENSIONING RETROFIT
PONTOON TYPE 3A

PLAN AND NOTES

BRIDGE SHEET NO. WR1
SHEET ___ OF ___ SHEETS

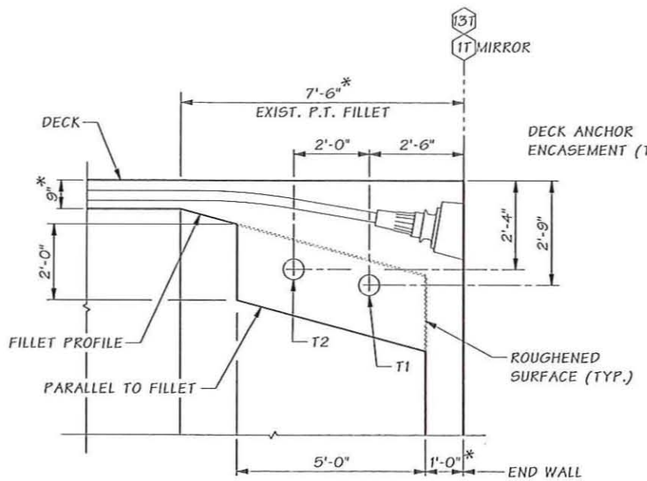

SECTION B

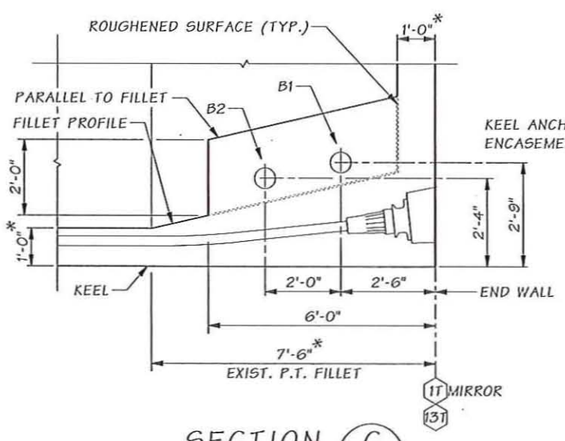

SECTION C

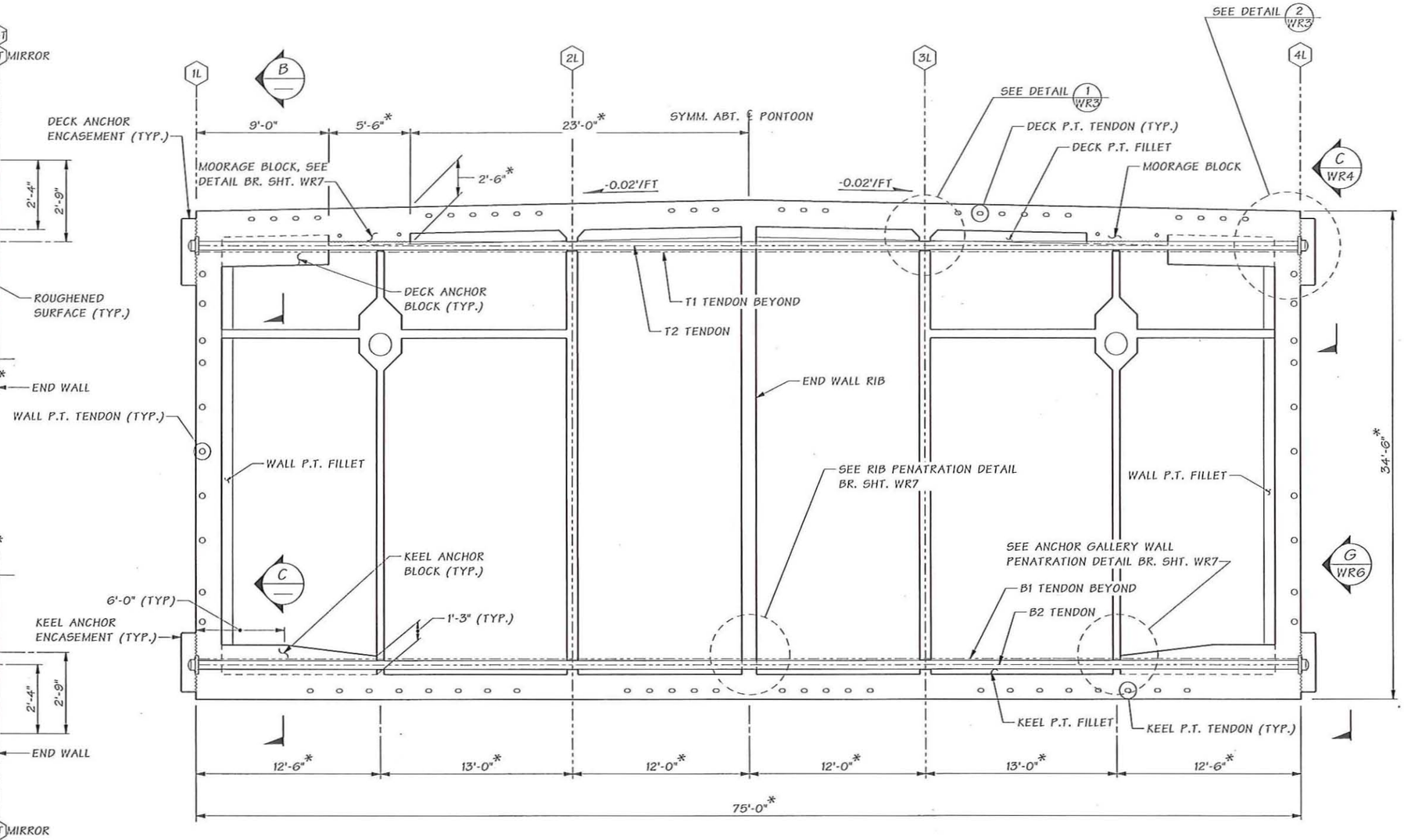

SECTION A WR1

*SEE NOTE 5 ON BR. SHT WR1

Bridge Design Engr. Khaleghi, B	M:\W-Team\SR 520 FLOATING BRIDGE\TYPE 3A TRANS PT RETROFIT\window files\2 TYPICAL SEC.wnd				REGION NO.	STATE	FED. AID PROJ. NO.	SHEET NO.	TOTAL SHEETS
Supervisor					10	WASH.			
Designed By Stoddard, RB / Kapur, J 02/13					JOB NUMBER				
Checked By Ferluga, E/ Bingle, J 02/13									
Detailed By Puryear, D 02/13									
Bridge Projects Engr.									
Prelm. Plan By									
Architect/Specialist	DATE	REVISION	BY	APP'D					

Mon Feb 25 13:05:13 2013

RICHARD B. STODDARD, STATE OF WASHINGTON, 21297, PROFESSIONAL ENGINEER 2/25/13

BRIDGE AND STRUCTURES OFFICE

JUGESH KAPUR, STATE OF WASHINGTON, 22450, PROFESSIONAL ENGINEER 2/25/13

Washington State Department of Transportation

SR 520
FLOATING BRIDGE AND LANDINGS PROJECT
TRANSVERSE POST-TENSIONING RETROFIT
PONTOON TYPE 3A

TYPICAL SECTION

BRIDGE SHEET NO. WR2
SHEET OF SHEETS

SR 520 FILE NO. ____ SHEET WR2

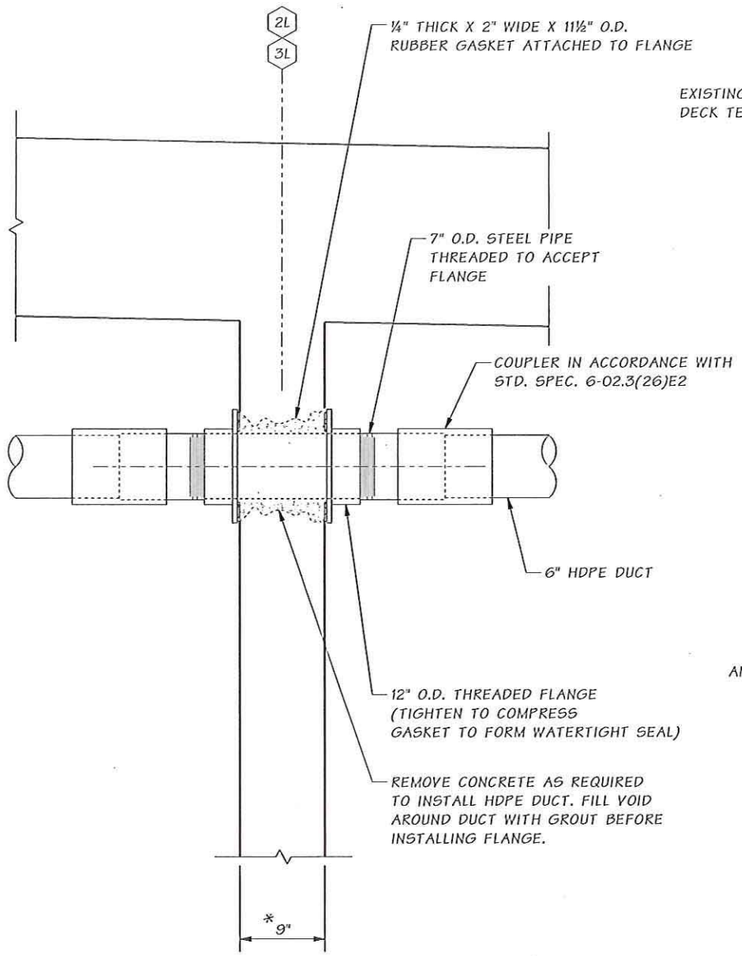

DETAIL 1 WR2
DECK SHOWN
KEEL SIMILAR

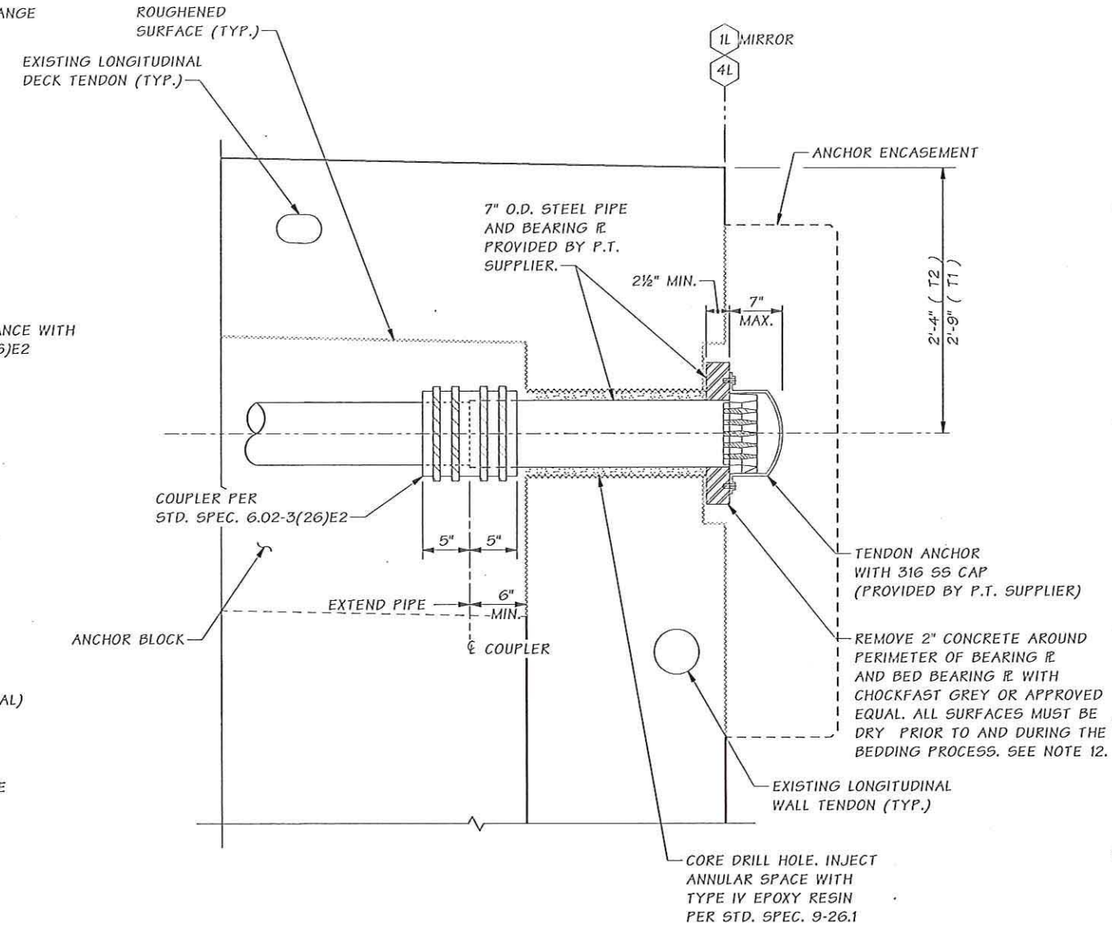

DETAIL 2 WR2
DECK SHOWN
KEEL SIMILAR

TRANSVERSE POST-TENSIONING NOTES

1. THE TRANSVERSE TENDONS CALLED OUT ON THIS SHEET ARE PROVIDED TO CLOSE AND PREVENT PROPAGATION OF EXISTING VERTICAL CRACKS IN THE KEEL AND DECK P.T. FILLETS THAT OCCURRED DURING CONSTRUCTION AND HANDLING OF THE PONTOON. THE TRANSVERSE TENDONS ARE NOT DESIGNED TO CLOSE OR PREVENT PROPAGATION OF CRACKING AT OTHER LOCATIONS IN THE PONTOON RESULTING FROM STRAINS INDUCED BY TIME-DEPENDANT EFFECTS.
2. THE TENDONS ARE SIZED TO PROVIDE A MINIMUM 600 PSI OF COMPRESSION IN THE BOLT BEAMS. EFFECTIVENESS OF THIS ADDED TRANSVERSE COMPRESSION HAS BEEN EVALUATED FOR THE FLOATING PONTOONS.
3. THE BOUNDARY CONDITIONS FOR A FLOATING PONTOON ASSUME A WATER DENSITY OF 62.4 LB/FT³.
4. THE CONTRACTOR SHALL SUPPORT THE DUCT SUCH THAT EACH DUCT MAINTAINS THE REQUIRED, LEVEL PROFILE WITHIN A PLACEMENT TOLERANCE OF PLUS OR MINUS ⅛" DURING ALL PHASES OF WORK.
5. THE MINIMUM PRESTRESSING LOAD AFTER SEATING AND THE MINIMUM NUMBER OF PRESTRESSING STRANDS SHALL BE AS SHOWN IN THE POST-TENSIONING TABLE. "LIVE END" REFERS TO THE END WHERE JACKING OCCURS. "DEAD END" REFERS TO THE END WHERE JACKING DOES NOT OCCUR.
6. THE DESIGN IS BASED ON 0.6 INCH DIAMETER LOW RELAXATION STRANDS, AN ANCHOR SET OF ⅜ INCH, A CURVATURE FRICTION COEFFICIENT OF μ = 0.15, A WOBBLE COEFFICIENT, K = 0.0002 /FT, AND THE JACKING LOAD SHOWN IN THE POST-TENSIONING TABLE. THE ACTUAL ANCHOR SET AND JACKING FORCE USED BY THE CONTRACTOR SHALL BE SPECIFIED IN THE SHOP PLANS AND INCLUDED IN THE TRANSFER FORCE CALCULATIONS.
7. THE ADDITIONAL PRESTRESS LOSS SHOWN IN THE POST-TENSIONING TABLE IS ESTIMATED AND CAUSED BY STRAND RELAXATION, ELASTIC SHORTENING, CREEP AND SHRINKAGE OF CONCRETE.
8. TENDONS T1 AND T2 SHALL BE STRESSED FROM ALTERNATE ENDS. TENDONS B1 AND B2 SHALL BE STRESSED FROM ALTERNATE ENDS.
9. THE PRESTRESSING LOAD LISTED IN THE POST-TENSIONING TABLE ARE PER TENDON.
10. THE SURFACE WITHIN THE LIMITS OF THE ANCHOR ENCASEMENTS AND ANCHORAGE ASSEMBLY SHALL BE COATED WITH AN EPOXY-BONDING AGENT PER RFP SECTION 2.12.5.10.11 PRIOR TO CASTING ENCASEMENT CONCRETE.
11. BEARING PLATE AND PIPE SHALL BE COATED WITH INORGANIC ZINC PRIMER.
12. THE BEDDING MATERIAL FOR BEARING PLATE SHALL HAVE A MINIMUM COMPRESSIVE STRENGTH OF 7.5 KSI AT THE TIME OF TENDON STRESSING.

Contract No.: 008066
Change Order No.: 108
Page 56 of 105

*SEE NOTE 5 ON BR. SHT WR1.

POST-TENSIONING TABLE

TENDON NUMBER AND SEQUENCE	NUMBER OF STRANDS PER TENDON	PRESTRESSING LOAD (KIPS)			ADDITIONAL PRESTRESS LOSS (KSI) (SEE NOTE 7)
		JACKING (SEE NOTE 9)	AFTER SEATING LIVE END (SEE NOTE 9)	AFTER SEATING DEAD END (SEE NOTE 9)	
T1, T2, B1, B2	18	791	744	756	10

SR 520 FILE NO. ____ SHEET WR3

Bridge Design Engr. Khaleghi, B	M:\W-Team\SR 520 FLOATING BRIDGE\TYPE 3A TRANS PT RETROFIT\window files\3 DETAILS.wnd								
Supervisor					REGION NO.	STATE	FED. AID PROJ. NO.	SHEET NO.	TOTAL SHEETS
Designed By Stoddard, RB / Kapur, J 02/13					10	WASH.			
Checked By Ferluga, E/ Bingle, J 02/13					JOB NUMBER				
Detailed By Puryear, D 02/13									
Bridge Projects Engr.									
Prelm. Plan By									
Architect/Specialist	DATE	REVISION	BY	APPD					

Mon Feb 25 13:05:16 2013

BRIDGE AND STRUCTURES OFFICE

RICHARD B. STODDARD — STATE OF WASHINGTON — 21257 — PROFESSIONAL ENGINEER — 2/25/13

JUGESH KAPUR — STATE OF WASHINGTON — 22435 — PROFESSIONAL ENGINEER — 2/25/13

Washington State Department of Transportation

SR 520
FLOATING BRIDGE AND LANDINGS PROJECT
TRANSVERSE POST-TENSIONING RETROFIT
PONTOON TYPE 3A

DUCT AND ANCHORAGE DETAILS

BRIDGE SHEET NO. WR3
SHEET ___ OF ___ SHEETS

Contract No.: 008066
Change Order No.: 108
Page 57 of 105

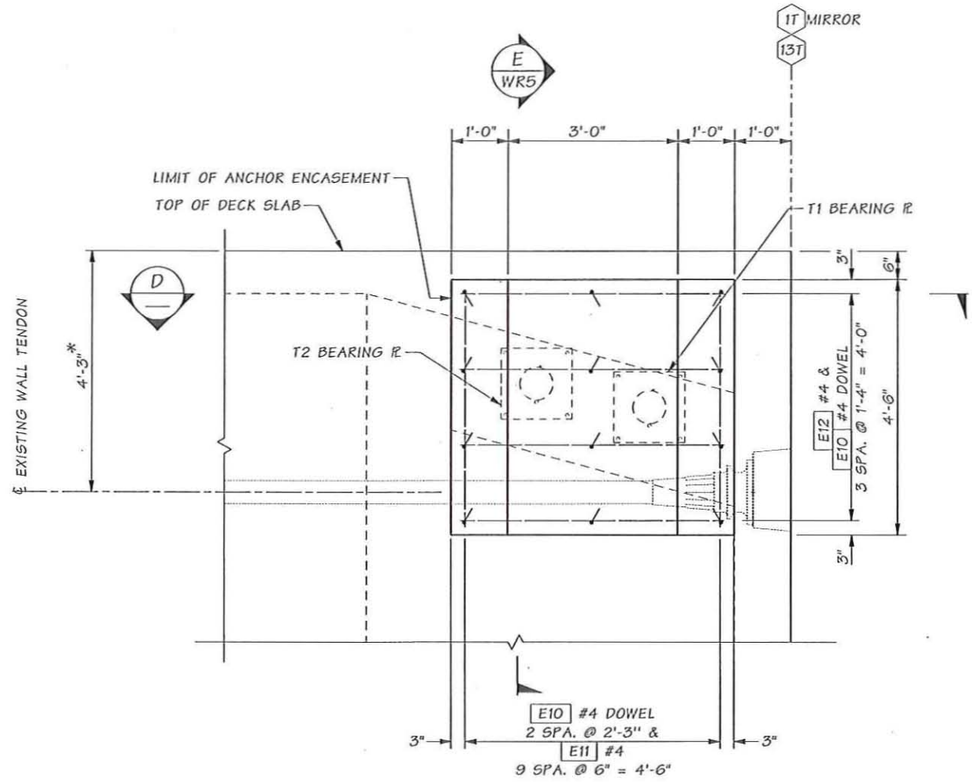

SECTION C WR2

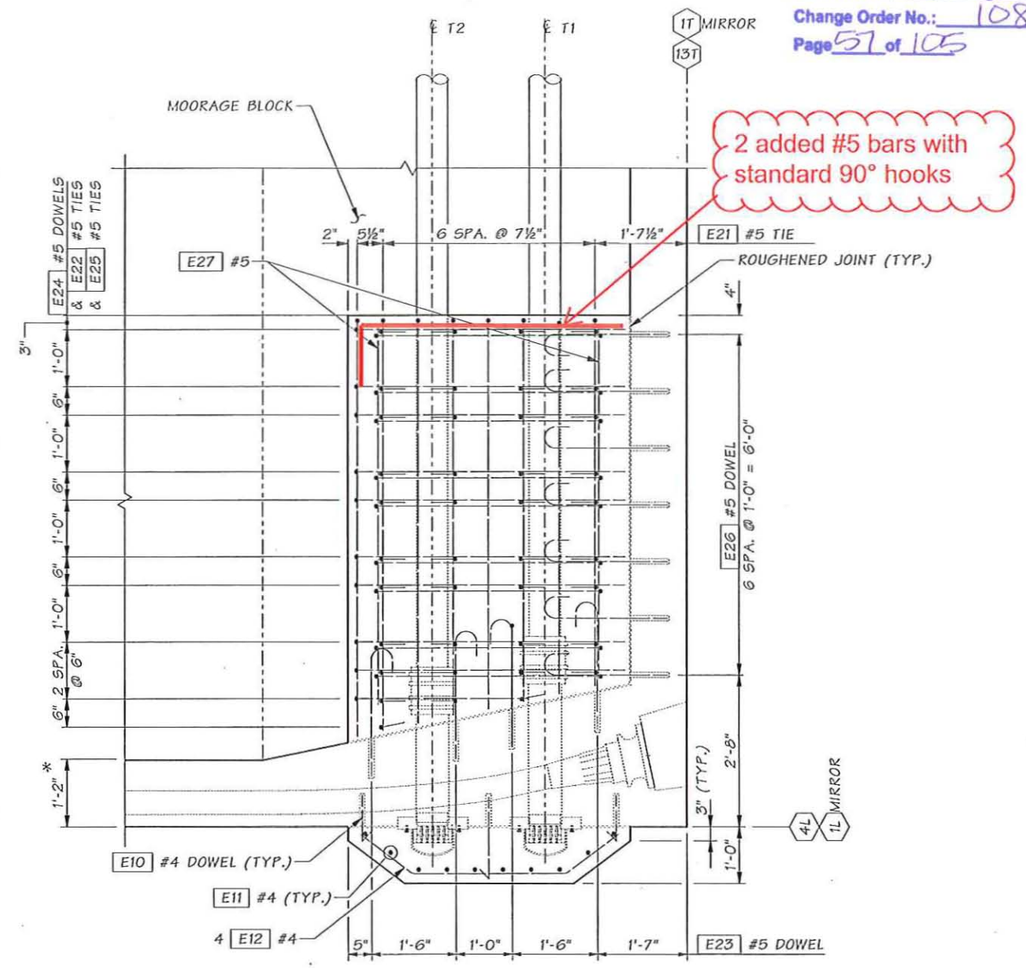

SECTION D —

DECK SLAB AND P.T. FILLET REINFORCEMENT NOT SHOWN FOR CLARITY.

*SEE NOTE 5 ON BR. SHT WR1

SR 520 FILE NO. ____ SHEET WR4

Bridge Design Engr. Khaleghi, B	M:\W-Team\SR 520 FLOATING BRIDGE\TYPE 3A TRANS PT RETROFIT\window files\4 DETAILS.wnd							
Supervisor					REGION NO.	STATE	FED. AID PROJ. NO.	SHEET NO.	TOTAL SHEETS
Designed By Stoddard, RB / Kapur, J 02/13					10	WASH.			
Checked By Ferluga, E/ Bingle, J 02/13					JOB NUMBER				
Detailed By Puryear, D 02/13									
Bridge Projects Engr.									
Prelm. Plan By									
Architect/Specialist	DATE	REVISION	BY	APP'D					

Mon Feb 25 13:05:18 2013

RICHARD B. STODDARD STATE OF WASHINGTON PROFESSIONAL ENGINEER 2/25/13

BRIDGE AND STRUCTURES OFFICE

JUGESH KAPUR STATE OF WASHINGTON PROFESSIONAL ENGINEER 2/25/13

Washington State Department of Transportation

SR 520
FLOATING BRIDGE AND LANDINGS PROJECT
TRANSVERSE POST-TENSIONING RETROFIT
PONTOON TYPE 3A

DECK ANCHOR BLOCK & ENCASEMENT DETAILS 1 OF 2

BRIDGE SHEET NO. WR4
SHEET ___ OF ___ SHEETS

Contract No.: 008066
Change Order No.: 108
Page 58 of 105

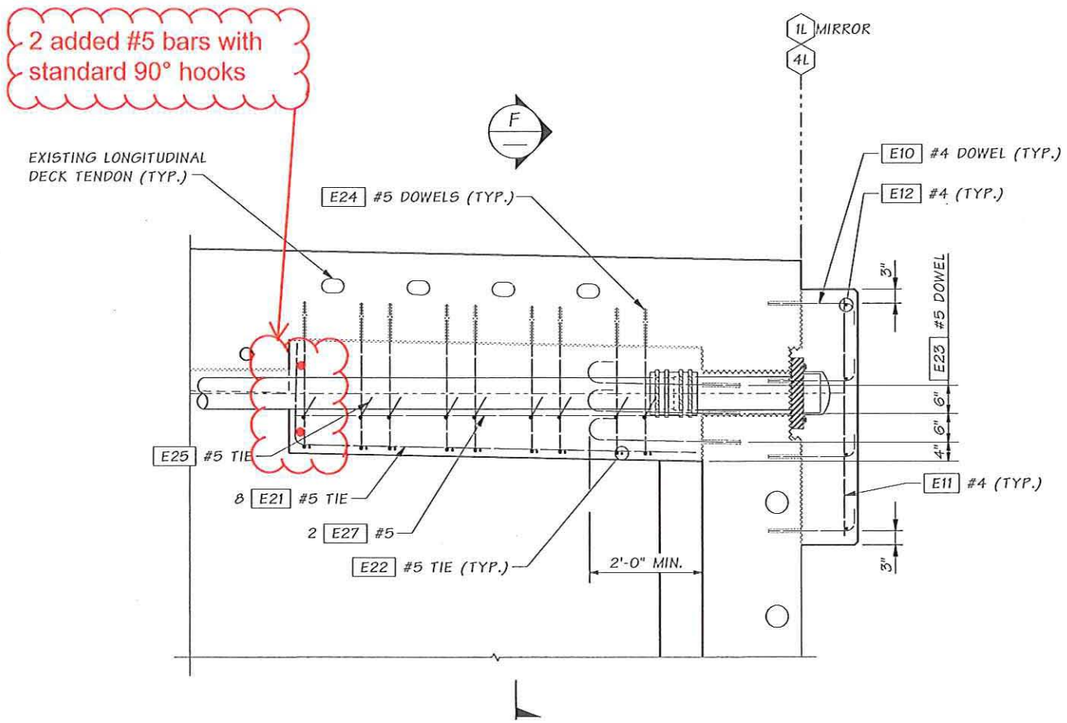

SECTION E
WR4

DECK SLAB AND P.T. FILLET REINFORCEMENT NOT SHOWN FOR CLARITY.

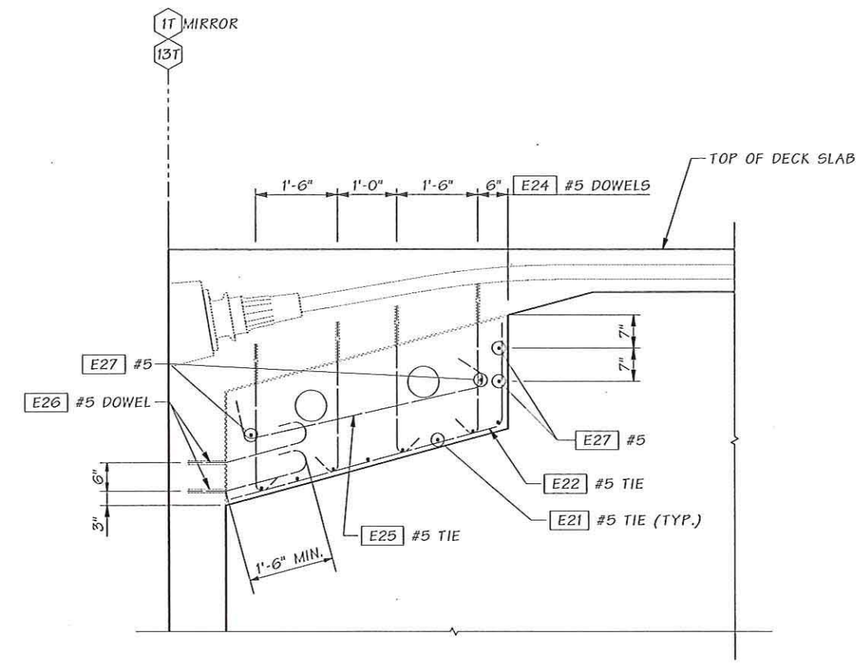

SECTION F
—

DECK SLAB AND P.T. FILLET REINFORCEMENT NOT SHOWN FOR CLARITY.

SR 520 FILE NO. ____ SHEET WR5

Bridge Design Engr. Khaleghi, B	M:\W-Team\SR 520 FLOATING BRIDGE\TYPE 3A TRANS PT RETROFIT\window files\5 DETAILS.wnd				REGION NO.	STATE	FED. AID PROJ. NO.	SHEET NO.	TOTAL SHEETS
Supervisor					10	WASH.			
Designed By Stoddard, RB / Kapur, J 02/13					JOB NUMBER				
Checked By Ferluga, E/ Bingle, J 02/13									
Detailed By Puryear, D 02/13									
Bridge Projects Engr.									
Prelim. Plan By									
Architect/Specialist	DATE	REVISION	BY	APP'D					

Mon Feb 25 13:05:20 2013

RICHARD B. STODDARD STATE OF WASHINGTON PROFESSIONAL ENGINEER 2/25/13

BRIDGE AND STRUCTURES OFFICE

JUGESH KAPUR STATE OF WASHINGTON PROFESSIONAL ENGINEER 2/25/13

Washington State Department of Transportation

SR 520
FLOATING BRIDGE AND LANDINGS PROJECT
TRANSVERSE POST-TENSIONING RETROFIT
PONTOON TYPE 3A

DECK ANCHOR BLOCK & ENCASEMENT DETAILS 2 OF 2

BRIDGE SHEET NO. WR5
SHEET ___ OF ___ SHEETS

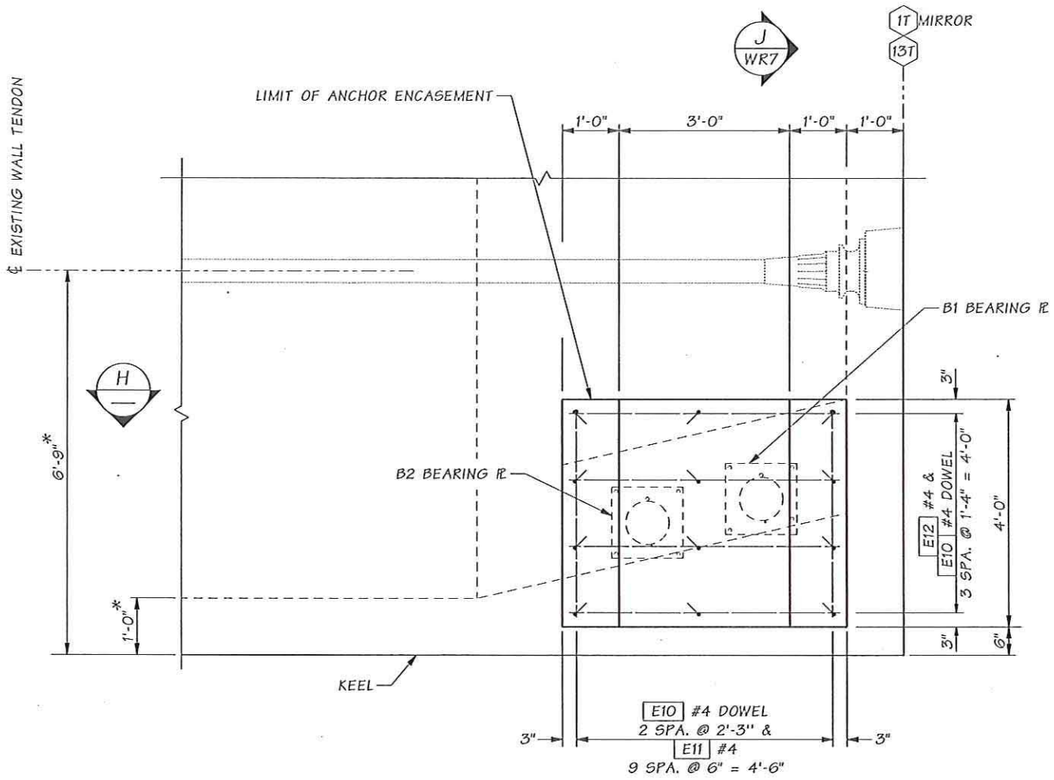

SECTION G
WR2

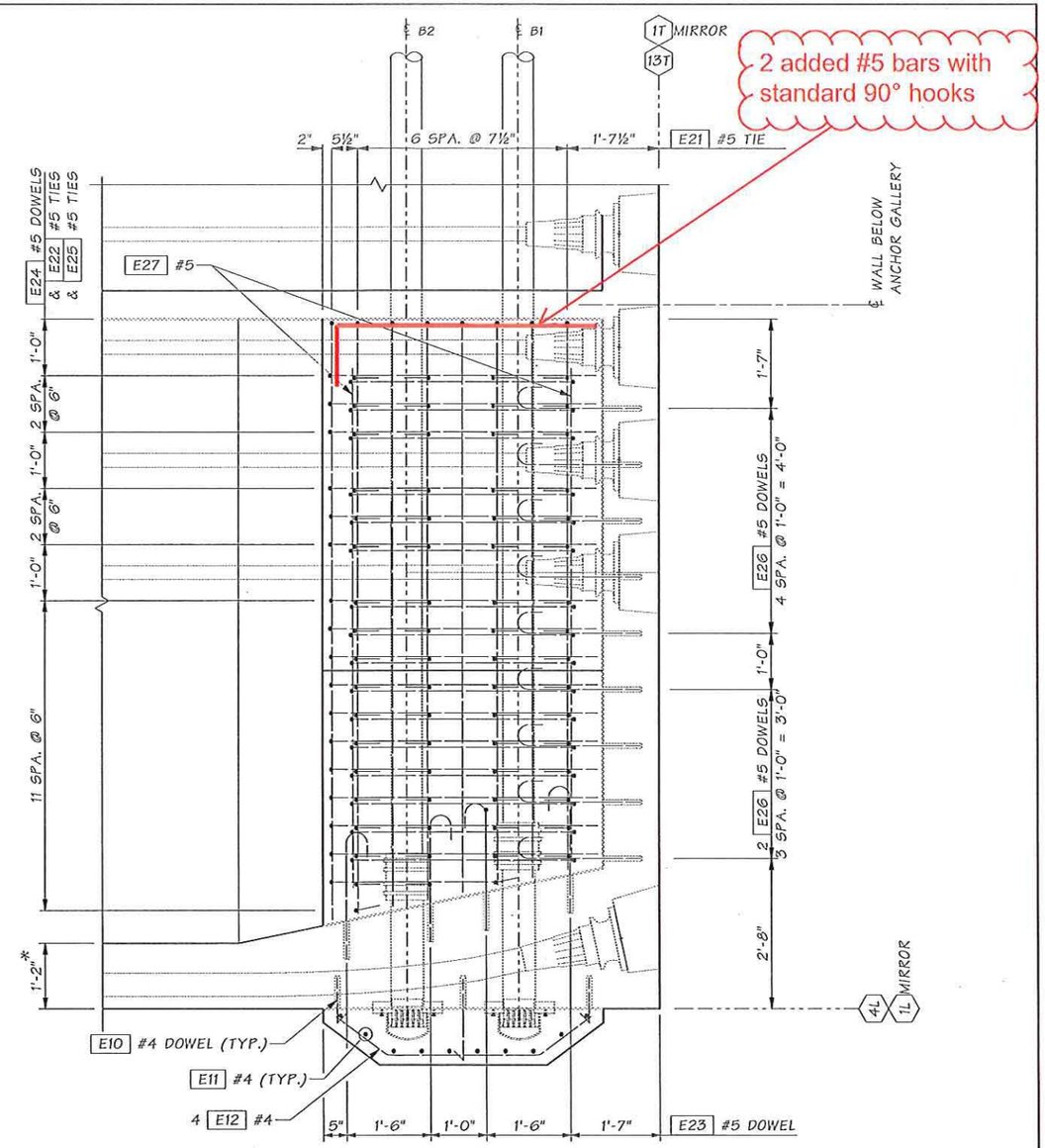

SECTION H
—

KEEL SLAB AND P.T. FILLET REINFORCEMENT NOT SHOWN FOR CLARITY.

Contract No.: 008066
Change Order No.: 108
Page 59 of 105

*SEE NOTE 5 ON BR. SHT WR1

SR 520 FILE NO. ____ SHEET WR6

Bridge Design Engr. Khaleghi, B	M:\W-Team\SR 520 FLOATING BRIDGE\TYPE 3A TRANS PT RETROFIT\window files\6 DETAILS.wnd							
Supervisor					REGION NO.	STATE	FED. AID PROJ. NO.	SHEET NO.	TOTAL SHEETS
Designed By Stoddard, RB / Kapur, J 02/13					10	WASH.			
Checked By Ferluga, E/ Bingle, J 02/13					JOB NUMBER				
Detailed By Puryear, D 02/13									
Bridge Projects Engr.									
Prelim. Plan By									
Architect/Specialist	DATE	REVISION	BY	APP'D					

Mon Feb 25 13:05:22 2013

RICHARD B. STODDARD STATE OF WASHINGTON PROFESSIONAL ENGINEER 2/25/13

BRIDGE AND STRUCTURES OFFICE

JUGESH KAPUR STATE OF WASHINGTON PROFESSIONAL ENGINEER 2/25/13

Washington State Department of Transportation

SR 520
FLOATING BRIDGE AND LANDINGS PROJECT
TRANSVERSE POST-TENSIONING RETROFIT
PONTOON TYPE 3A

KEEL ANCHOR BLOCK & ENCASEMENT DETAILS 1 OF 2

BRIDGE SHEET NO. WR6
SHEET ___ OF ___ SHEETS

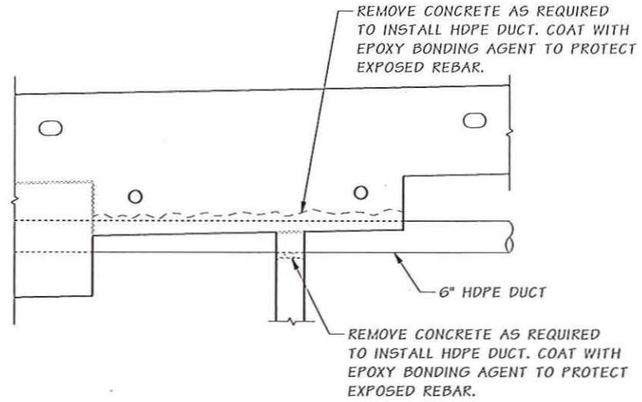

MOORAGE PAD-EYE BLOCK PENETRATION DETAIL

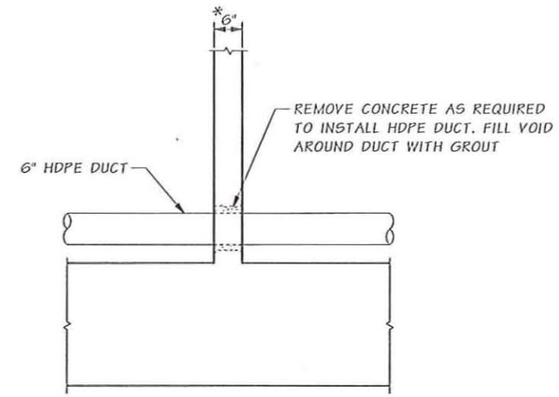

ANCHOR GALLERY WALL PENETRATION DETAIL

KEEL SHOWN
DECK SIMILAR

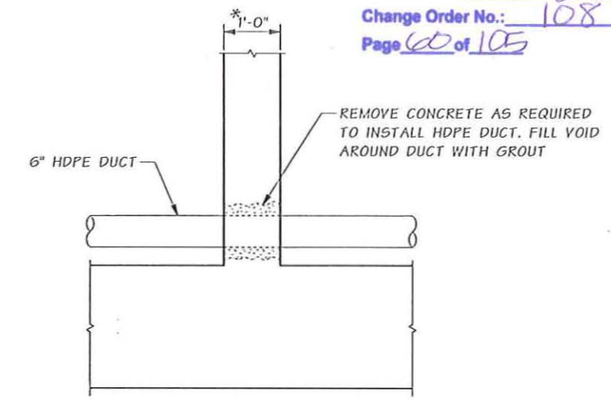

END WALL RIB PENETRATION DETAIL

KEEL SHOWN
DECK SIMILAR

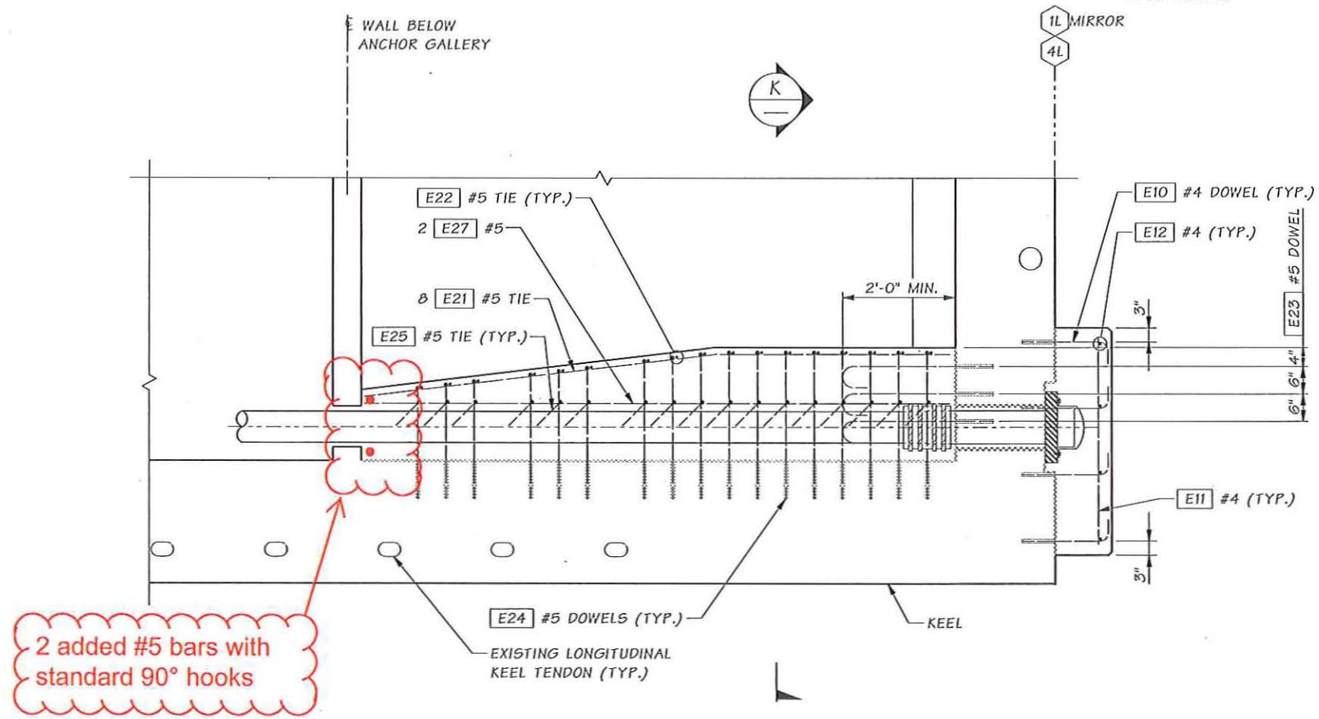

SECTION J WR6

DECK SLAB AND P.T. FILLET REINFORCEMENT NOT SHOWN FOR CLARITY.

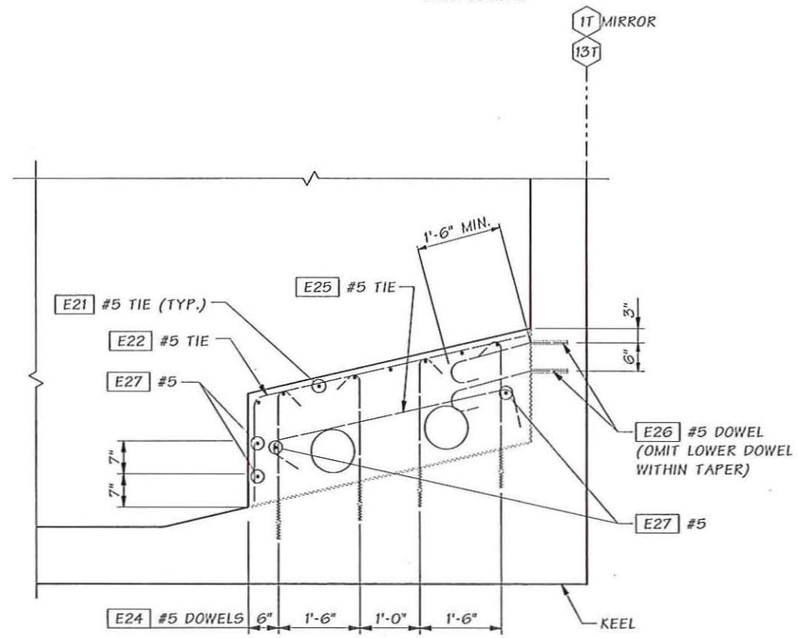

SECTION K

DECK SLAB AND P.T. FILLET REINFORCEMENT NOT SHOWN FOR CLARITY.

*SEE NOTE 5 ON BR. SHT WR1.

Bridge Design Engr. Khaleghi, B	M:\W-Team\SR 520 FLOATING BRIDGE\TYPE 3A TRANS PT RETROFIT\window files\7 DETAILS.wnd							
Supervisor				REGION NO.	STATE	FED. AID PROJ. NO.	SHEET NO.	TOTAL SHEETS
Designed By Stoddard, RB / Kapur, J 02/13				10	WASH.			
Checked By Ferluga, E/ Bingle, J 02/13				JOB NUMBER				
Detailed By Puryear, D 02/13								
Bridge Projects Engr.								
Prelim. Plan By								
Architect/Specialist	DATE	REVISION	BY	APP'D				

Mon Feb 25 13:05:25 2013

RICHARD B. STODDARD, STATE OF WASHINGTON, PROFESSIONAL ENGINEER — 2/25/13

BRIDGE AND STRUCTURES OFFICE

JUGESH KAPUR, STATE OF WASHINGTON, PROFESSIONAL ENGINEER — 2/25/13

Washington State Department of Transportation

SR 520
FLOATING BRIDGE AND LANDINGS PROJECT
TRANSVERSE POST-TENSIONING RETROFIT
PONTOON TYPE 3A

KEEL ANCHOR BLOCK & ENCASEMENT DETAILS 2 OF 2

BRIDGE SHEET NO. WR7
SHEET OF SHEETS

SR 520 FILE NO. ____ SHEET WR7

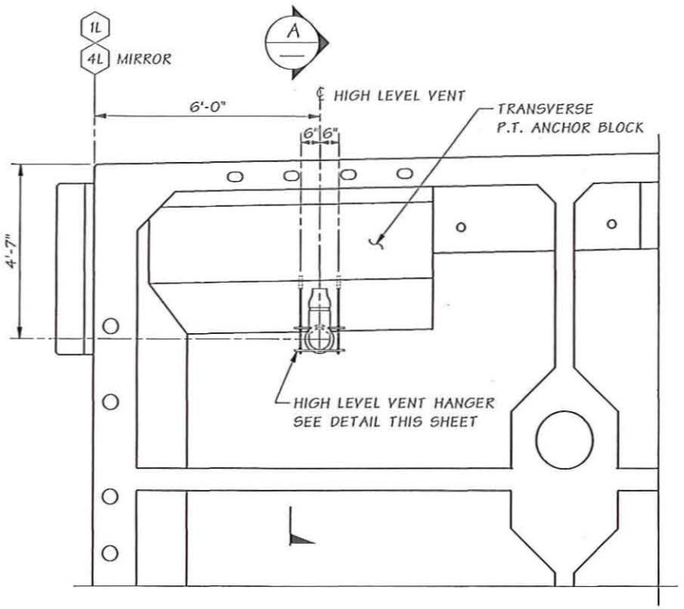

HIGH LEVEL VENT DETAIL

TRANSVERSE P.T. NOT SHOWN FOR CLARITY

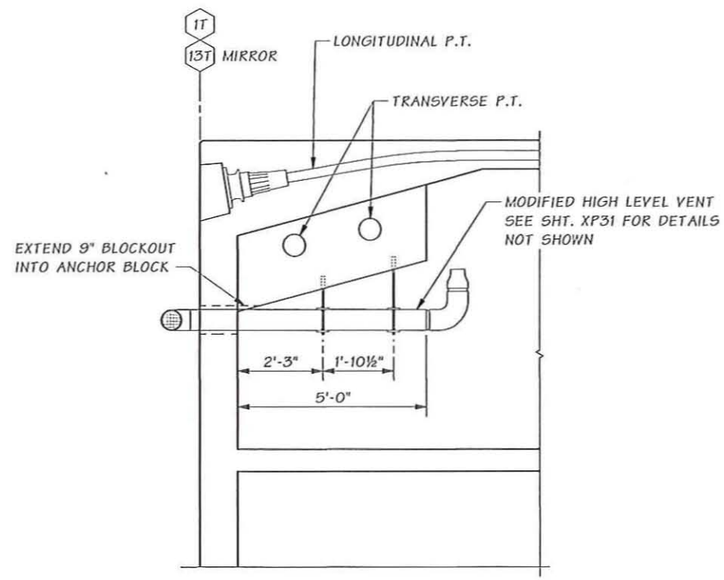

SECTION A

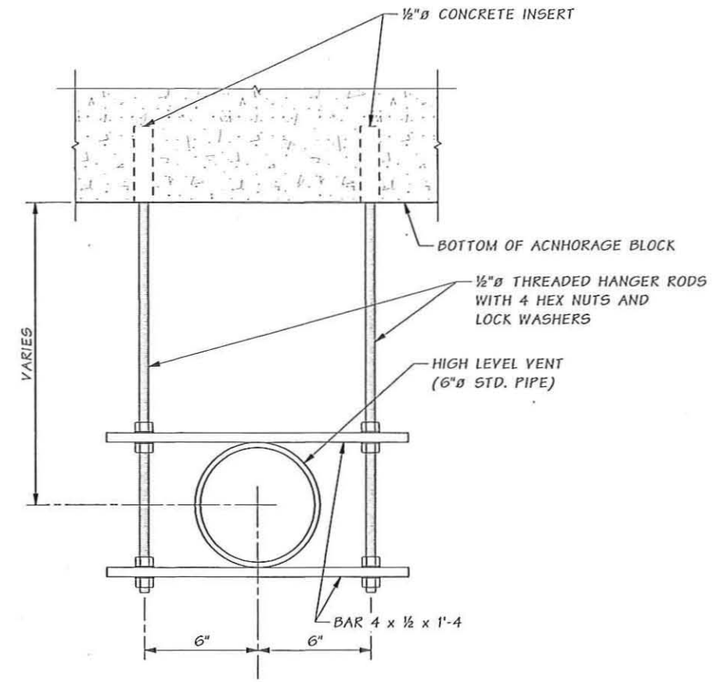

HIGH LEVEL VENT HANGER DETAIL

HANGER NOTES

1. STEEL BARS SHALL CONFORM TO ASTM A36 AND SHALL BE GALVANIZED IN ACCORDANCE WITH AASHTO M111.
2. HANGER RODS SHALL CONFORM TO ASTM A307 GRADE A OR B. NUTS SHALL COMPLY WITH ASTM A563 GRADE A REQUIREMENTS. WASHERS SHALL MEET ASTM F844 SPECIFICATIONS. HANGER RODS, NUTS AND WASHERS SHALL BE GALVANIZED IN ACCORDANCE WITH AASHTO M232.
3. CONCRETE INSERTS SHALL BE GALVANIZED AND ISOLATED FROM REINFORCEMENT BY A MINIMUM OF 1½".
4. CONCRETE INSERTS SHALL BE INSTALLED PLUMB (LEVEL LONGITUDINALLY AND TRANSVERSELY).
5. HANGER ROD THREADS MAY BE CHASED FOR THREAD COMPATIBILTY WITH INSERTS. THE LENGTH OF THREADS TO BE CHASED SHALL BE MINIMIZED.

Contract No.: 008066
Change Order No.: 108
Page 61 of 105

SR 520 FILE NO. ____ SHEET AR8

Bridge Design Engr. Khaleghi, B	M:\W-Team\SR 520 FLOATING BRIDGE\TYPE 3 TRANS PT RETROFIT\Window files\8 DETAILS.WND				REGION NO.	STATE	FED. AID PROJ. NO.	SHEET NO.	TOTAL SHEETS
Supervisor					10	WASH.			
Designed By Ferluga, E									
Checked By									
Detailed By Ferluga, E					JOB NUMBER				
Bridge Projects Engr.									
Prelim. Plan By									
Architect/Specialist	DATE	REVISION	BY	APP'D					

Wed May 01 12:07:54 2013

BRIDGE AND STRUCTURES OFFICE

Washington State Department of Transportation

SR 520
PONTOON CONSTRUCTION PROJECT
TRANSVERSE POST-TENSIONING RETROFIT
PONTOON TYPE 3

HIGH LEVEL VENT SUPPORT

BRIDGE SHEET NO. AR8
SHEET OF SHEETS

Contract No.: 008066
Change Order No.: 108
Page 62 of 105

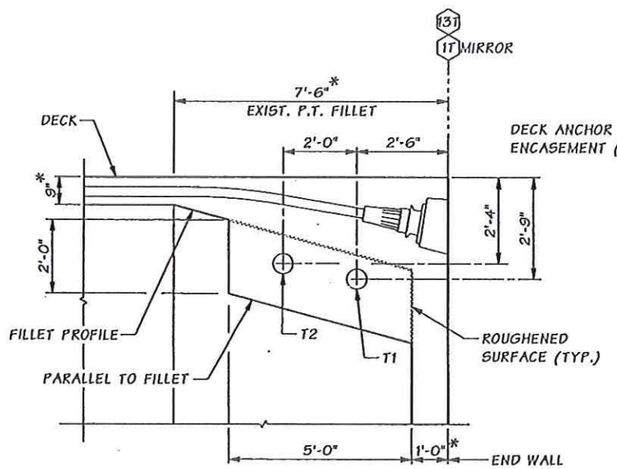

SECTION B

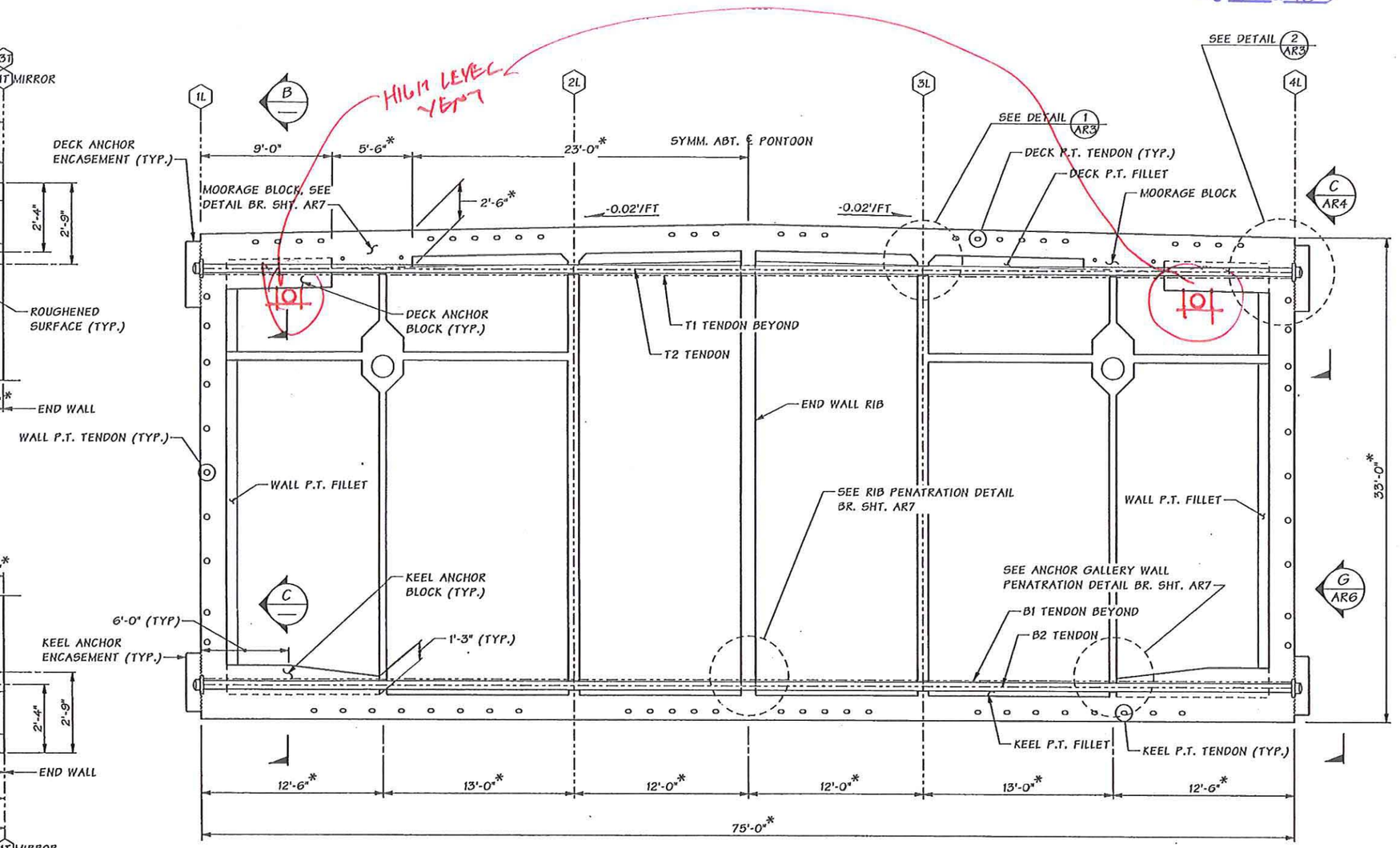

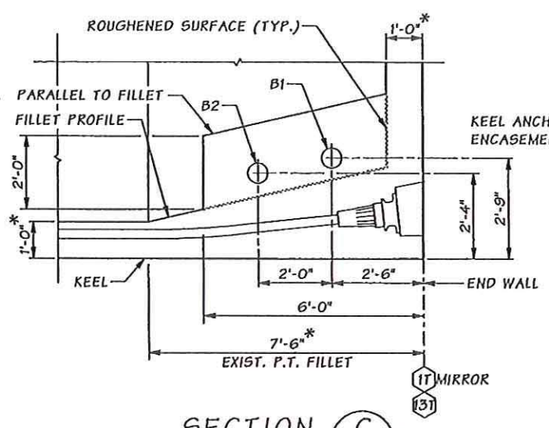

SECTION C

SECTION A AR1

*SEE NOTE 5 ON BR. SHT AR1

Bridge Design Engr. Khaleghi, B	H:\W-Team\SR 520 FLOATING BRIDGE\TYPE 3 TRANS PT RETROFIT\window files\2 TYPICAL SEC.wnd				REGION NO.	STATE	FED. AID PROJ. NO.	SHEET NO.	TOTAL SHEETS
Supervisor					10	WASH.			
Designed By Stoddard, RB / Kapur, J 02/13					JOB NUMBER				
Checked By Ferluga, E / Bingle, J 02/13									
Detailed By Puryear, D 02/13									
Bridge Projects Engr.									
Prelim. Plan By									
Architect/Specialist	DATE	REVISION	BY	APP'D					

Mon Feb 25 13:05:29 2013

RICHARD B. STODDARD, STATE OF WASHINGTON, PROFESSIONAL ENGINEER 2/25/13

BRIDGE AND STRUCTURES OFFICE

JUGESH KAPUR, STATE OF WASHINGTON, PROFESSIONAL ENGINEER 2/25/13

Washington State Department of Transportation

SR 520
PONTOON CONSTRUCTION PROJECT
TRANSVERSE POST-TENSIONING RETROFIT
PONTOON TYPE 3

TYPICAL SECTION

BRIDGE SHEET NO. AR2
SHEET OF SHEETS

SR 520 FILE NO. ____ SHEET AR2

Contract No.: 008066
Change Order No.: 108
Page 63 of 105

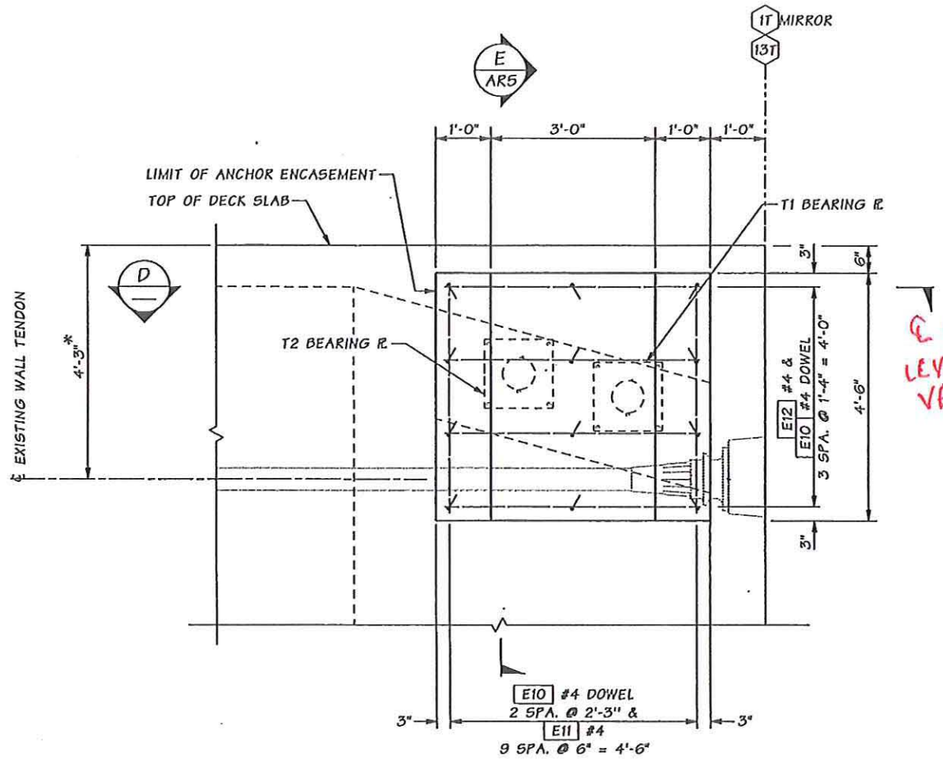

SECTION C
AR2

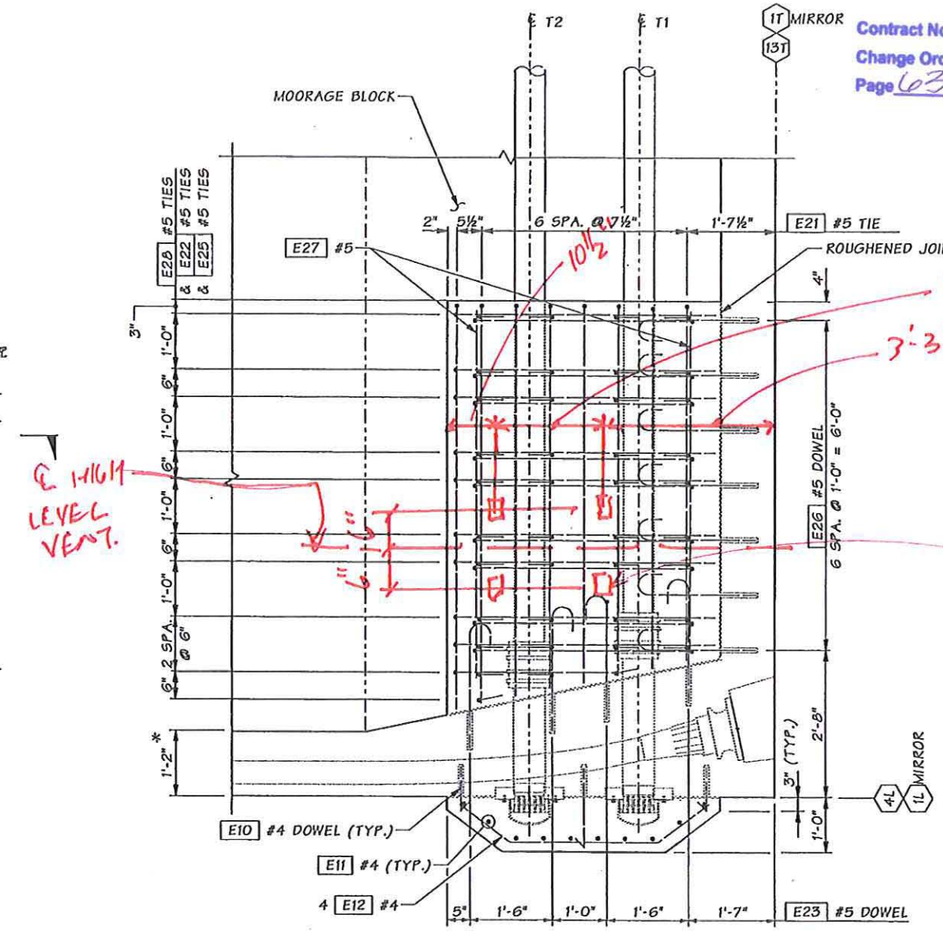

SECTION D
—

DECK SLAB AND P.T. FILLET REINFORCEMENT NOT SHOWN FOR CLARITY.

*SEE NOTE 5 ON BR. SHT AR1

SR 520 FILE NO. ____ SHEET AR4

Bridge Design Engr. Khaleghi, B	M:\W-Team\SR 520 FLOATING BRIDGE\TYPE 3 TRANS PT RETROFIT\window files\4 DETAILS.wnd								
Supervisor					REGION NO.	STATE	FED. AID PROJ. NO.	SHEET NO.	TOTAL SHEETS
Designed By Stoddard, RB / Kapur, J 02/13					10	WASH.			
Checked By Ferluga, E / Bingle, J 02/13					JOB NUMBER				
Detailed By Puryear, D									
Bridge Projects Engr.									
Prelim. Plan By									
Architect/Specialist	DATE	REVISION	BY	APP'D					

Mon Feb 25 13:05:34 2013

RICHARD B. STODDARD — STATE OF WASHINGTON — PROFESSIONAL ENGINEER — 2/25/13

BRIDGE AND STRUCTURES OFFICE

JUGESH KAPUR — STATE OF WASHINGTON — PROFESSIONAL ENGINEER — 2/25/13

Washington State Department of Transportation

SR 520
PONTOON CONSTRUCTION PROJECT
TRANSVERSE POST-TENSIONING RETROFIT
PONTOON TYPE 3

DECK ANCHOR BLOCK & ENCASEMENT DETAILS 1 OF 2

BRIDGE SHEET NO. AR4

SHEET ___ OF ___ SHEETS

Contract No.: 008066
Change Order No.: 108
Page 64 of 105

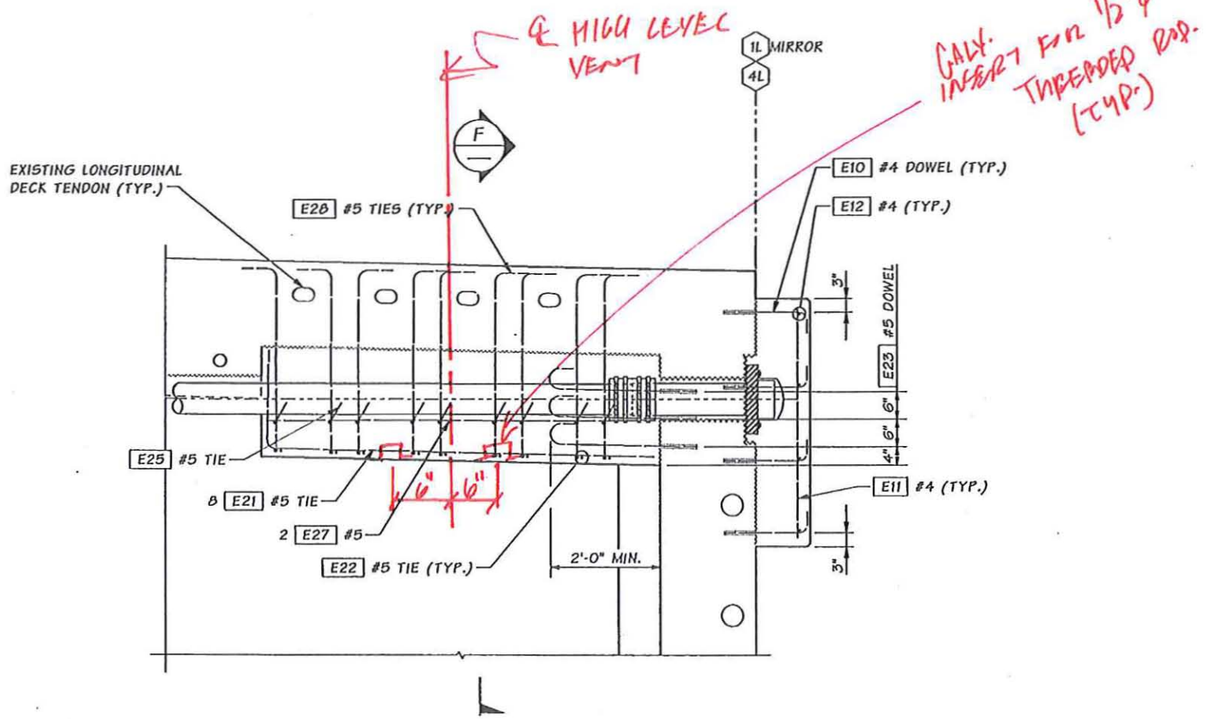

SECTION E
AR4

DECK SLAB AND P.T. FILLET REINFORCEMENT NOT SHOWN FOR CLARITY.

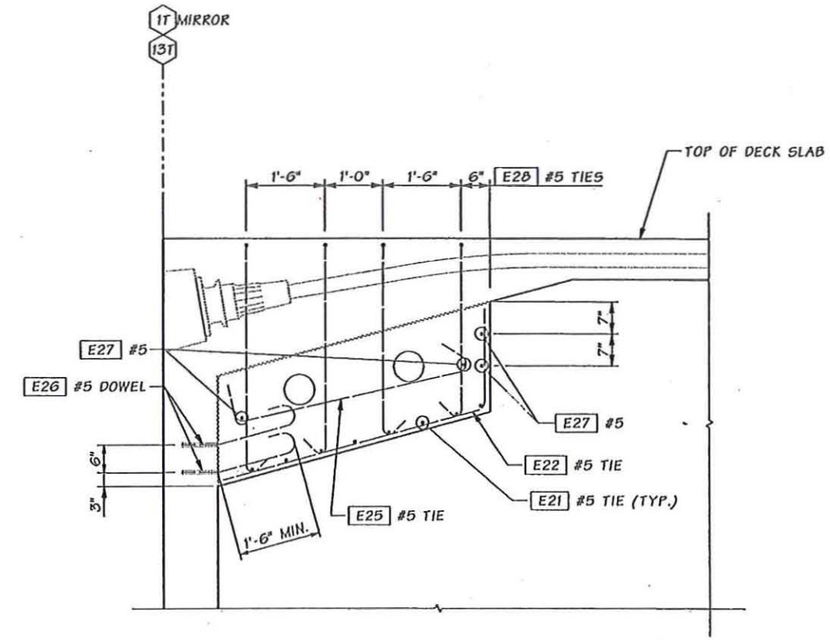

SECTION F
—

DECK SLAB AND P.T. FILLET REINFORCEMENT NOT SHOWN FOR CLARITY.

HANGER NOTES:

1. INSERTS SHALL BE INSTALLED LEVEL LONGITUDINALLY AND TRANSVERSLY

~~2. INSERT SHALL BE PLACED TO PROVIDE TRANSVERSE ADJUSTMENT OF HANGER ROD~~

3. CONCRETE HANGERS SHALL BE ISOLATED FROM REINFORCEMENT BY 1½"

SR 520 FILE NO. ____ SHEET AR5

Bridge Design Engr. Khaleghi, B	H:\W-Team\SR 520 FLOATING BRIDGE\TYPE 3 TRANS PT RETROFIT\window files\5 DETAILS.wnd								
Supervisor					REGION NO.	STATE	FED. AID PROJ. NO.	SHEET NO.	TOTAL SHEETS
Designed By Stoddard, RB / Kapur, J 02/13					10	WASH.			
Checked By Ferluga, E / Bingle, J 02/13					JOB NUMBER				
Detailed By Puryear, D 02/13									
Bridge Projects Engr.									
Prelim. Plan By									
Architect/Specialist	DATE	REVISION	BY	APP'D					

Mon Feb 25 13:05:37 2013

RICHARD B. STODDARD, STATE OF WASHINGTON, REGISTERED PROFESSIONAL ENGINEER 2/25/13

BRIDGE AND STRUCTURES OFFICE

JUGESH KAPUR, STATE OF WASHINGTON, REGISTERED PROFESSIONAL ENGINEER 2/25/13

Washington State Department of Transportation

SR 520
PONTOON CONSTRUCTION PROJECT
TRANSVERSE POST-TENSIONING RETROFIT
PONTOON TYPE 3

DECK ANCHOR BLOCK & ENCASEMENT DETAILS 2 OF 2

BRIDGE SHEET NO. AR5

SHEET ___ OF ___ SHEETS

RFI #	Name	Date Submitted	Recycled Date	Status	Respon-sible Party	Days Open	Date Due Back To KG	Date Returned to KG	Reason For RFI	Drawings Affected	Spec Section	WSDOT PE Comments	Repair or NC	Change?	Contractor Option	New Drawings Provided	FB&L	Associated RFI's	Disposition
658	Thermal Control of Bolt Beam Retrofit	2/18/2013		Completed	N/A		3/4/2013		General Note #11 of the SR 520 Pontoons Construction Project Bolt Beam Retrofit Plan and Notes states the anchor blocks shall be treated as mass concrete and measures shall be taken accordingly. To perform an analysis and design a thermal control plan for the blocks additional information is required. Please provide responses to the 6 questions below. (1) Are the goals of the thermal control of this mass concrete pour to meet industry standards? (2) Is the plan meant to minimize thermal cracking? (3) Is the plan meant to minimize shrinkage cracking? (4) What crack widths are acceptable and when will they be measured (pre/post PT)? (5) Are all of the currently approved mix designs acceptable for this placement? (6) Can the approved mix designs be modified, or can different concrete be used?	SR 520 PCP Bolt Beam Retrofit PR1	N	Here are responses to the questions from the contractor: 1. It's not clear what is meant by meeting industry standards. 2. It is the intent of this note to minimize or eliminate thermal cracking. 3. It is not the intent of this note to minimize shrinkage cracking. 4. Any cracks in the anchor block will need to be repaired per requirements of the RFP. Cracks will be measured prior to post-tensioning. If new cracks form after post-tensioning, WSDOT will review and decide if repair is needed. 5. Any of the currently approved mix designs are acceptable. 6. The contractor may propose modifications to existing mix designs or new mix designs for these elements. The reason for this note is concern about excessive temperature differentials between the core of the anchor block and the perimeter of the block. WSDOT suggests the contractor consider placing insulating blankets on the surface of the concrete after placement. Because of the modest depth of these elements, cooling the core doesn't seem warranted. Contractor should monitor core and perimeter temperatures on the initial anchor block pours. If temperature differentials are excessive and/or cracking is observed, modifications can be made to subsequent pours to provide internal cooling.	N	TBD	N	N	N	RFI 677 RFI 687 RFI 724	2 - PCI 120
661	Roughened Core Holes	2/19/2013		Completed	N/A	6	3/5/2013	2/25/2013	The cycle 2 type 1 transverse post tensioning bolt beam retrofit design was transmitted to KG via email on 2/14. In the General Notes on Sheet PR1, it states that anchor encasement and anchor blocks shall be roughened to 1/4" amplitude. On sheet PR3, Detail 2, it appears to show the cored hole being roughened with a jagged line versus a straight line. Please confirm that the inside of the cored holes shall to be roughened to 1/4" amplitude. See attached bolt beam retrofit sheets.	SR520 PCP Bolt Beam Retrofit PR3	N	The Contractor shall roughen the first 6" of core hole adjacent to both the exterior and interior faces of the pontoon. Roughening shall be done to a 1/4" amplitude. Roughening these portions of the hole will help lock in the epoxy resin between the core hole and the steel pipe. The core holes through the interior walls do not need to be roughened.	N	Y	N	N	N	N	2 - PCI 120
662	Post Tensioning Stressing Sequence	2/19/2013		Completed	N/A	6	3/5/2013	2/25/2013	The cycle 2 type 1 transverse post tensioning bolt beam retrofit design was transmitted to KG via email on 2/14/13. Sheet PR3 shows a tendon number and sequence box. The box shows T1, T2, B1, and B2. Note 10 also states that T1 and T2 tendons shall be stressed from alternate ends as well as tendons B1 and B2. There are 2 questions relating to this specification. 1) Please confirm that the transverse tendons will be stressed first and the longitudinal tendons will be stressed second. 2) Can two transverse tendons stress be stressed from the same end (e.g. T1 & B1 from 1L side) before switching to the other wall line (T2 & B2 from 5L side). If not acceptable, please confirm the stressing sequence must be T1, T2, B1, and B2. See linked Bolt Beam Retrofit Sheet PR3.	PCP BB Retrofit PR3	N	1) Confirmed. Transverse tendons at the end walls shall be stressed first, followed by the longitudinal tendons. 2) It is acceptable to revise the stressing sequence to T1-B1-T2-B2.	N	Y	N	N	N	N	2 - PCI 120
663	Bolt Beam Retrofit Measureme nts - General Note #5 On Sheet PR1	2/19/2013		Completed	N/A	13	3/5/2013	3/4/2013	The cycle 2 type 1 transverse post tensioning bolt beam retrofit design was transmitted to KG via email on 2/14/13. Per General Note #5 on Bolt Beam Retrofit Sheet PR1, K-G is to take all noted measurements prior to ordering material and proceeding with construction. Prior to receipt of this design on 2/14/13, KG was directed by WSDOT to proceed with some demo activities and material procurement. See attached Bolt Beam Retrofit Sheets. Please confirm that all construction activities and material procurement may proceed prior to taking the called out field measurements per General Note #5 on Bolt Beam Retrofit Sheet PR1. If this modification is not allowed, significant additional schedule impacts will be realized as this data is collected and processed. Additionally, if field measurement of these dimensions is required at all, please direct KG on what to do with the measurements after collection and exactly where each of the required dimensions is to be obtained from. For example, sheet PR2 calls out the dimension between gridline 1L and 2L to be checked. Where, in elevation, does that dimension need to be measured?	PCP BB Retrofit PR1-4 and PR6	N	The intent of requiring the field measuring was to provide the contractor with as-built dimensions that could affect the geometry of materials to be ordered. WSDOT acknowledges that the contractor was directed to order some materials prior to any field measuring efforts. WSDOT takes no exceptions to omitting the field measuring requirement.	N	N	N	N	N	N	2 - PCI 120

RFI #	Name	Date Submitted	Recycled Date	Status	Respon-sible Party	Days Open	Date Due Back To KG	Date Returned to KG	Reason For RFI	Drawings Affected	Spec Section	WSDOT PE Comments	Repair or NC	Change?	Contractor Option	New Drawings Provided	FB&L	Associated RFI's	Disposition
664	Dowel Location Tolerance - Cycle 2 Bolt Beam Retrofit	2/19/2013		Completed	N/A	8	3/5/2013	2/27/2013	The cycle 2 type 1 transverse post tensioning bolt beam retrofit design was transmitted to KG via email on 2/14/13. General Note #9 on Bolt Beam Retrofit Sheet PR1 states that doweled in reinforcement locations shall be adjusted in the field to miss tendons, bolts, steel pipes, and any other reinforcement. Please provide a tolerance or an approved move distance for the doweled reinforcement. See attached Bolt Beam Retrofit Sheets.	PCP BB Retrofit PR1 and PR4-7	N	The #7 dowels shall have a minimum embedment depth of 7 ½" when Hilti HIT RE 500 epoxy is used. When concrete is removed to expose reinforcing steel, embedment depth shall be measured from the concrete surface at the time of drilling (not the original concrete surface). When the dowel pattern shown in the plans can't be achieved due to reinforcing steel encountered during drilling, the location of the dowels can be adjusted. Dowels shall not be placed closer than 3 ¾" The #6 dowels shall have a minimum embedment depth of 6" with Hilti HIT RE 500 epoxy is used. When concrete is removed to expose reinforcing steel, embedment depth shall be measured from the concrete surface at the time of drilling (not the original concrete surface). When the dowel pattern shown in the plans can't be achieved due to reinforcing steel encountered during drilling, the location of the dowels can be adjusted. Dowels shall not be placed closer than 3"	N	Y	N	N	N	RFI 673	2 - PCI 120
665	Anchor Block Strength Prior to Stressing	2/19/2013		Completed	N/A	6	3/5/2013	2/25/2013	The Cycle 2 Type 1 transverse post tensioning bolt beam retrofit design was transmitted to KG via email on 2/14/13. On Sheet PR1 Note #3, it states that anchor block concrete shall attain a minimum of 5.0 ksi before stressing. On Sheet PR3 Note #5, it states that pontoon concrete shall attain 7.5 ksi before stressing. See attached bolt beam retrofit sheets. Please confirm that the anchor block concrete must attain 5.0ksi and all other pontoon concrete must attain 7.5ksi before stressing.	PCP BB Retrofit PR1 and PR3	N	Confirmed. Anchor block concrete shall achieve 5.0 ksi compressive strength prior to transverse stressing, and all other concrete shall achieve 7.5 ksi compressive strength prior to transverse stressing.	N	Y	N	N	N	N	2 - PCI 120
666	Drilled Holes Through Top Deck to Support Falsework	2/19/2013		Completed	N/A	13	3/5/2013	3/4/2013	The Cycle 2 Type 1 Transverse post tensioning bolt beam retrofit design was transmitted to KG via email on 2/14/13. To accommodate the retrofit process, a suspended work deck platform will be needed at each corner of Type 1 Pontoon to support falsework & formwork for the Transverse PT anchor block. Attached is a preliminary sketch of how the platform would be suspended. In order to support the suspended work deck platform, additional lowering holes may be needed on the top deck of the pontoon. See attached plan sheet showing location and size of additional lowering holes. See attached sketch also. Please confirm that it is acceptable to drill and/or utilize blockouts for additional 2" dia. holes in the top deck to support the formwork and falsework for the anchor block. Core drilling of these holes would likely be necessary unless blockouts could be utilized prior to the top deck pour.	N	N	It is acceptable for the contractor to core a 2" hole in each corner of the Type 1 pontoons at the location shown in the contractor's sketch. The hole shall be positioned to avoid bolt beam sleeves and post-tensioning duct.	N	Y	N	N	N	RFI 720	2 - PCI 120
667	Core Hole Size Diameter Interior and Exterior	2/19/2013		Completed	N/A	7	3/5/2013	2/26/2013	The Cycle 2 Type 1 Transverse post tensioning bolt beam retrofit design was transmitted to KG via email on 2/14/13. Sheet PR3 of the Bolt Beam Retrofit drawings shows holes through the interior and exterior walls to accomodate the PT duct. Per the attached email sent on 2/15, K-G received direction to drill 9" core holes on the exterior walls of the pontoon. Please provide direction to KG to core drill 11" diameter holes on the interior walls.	SR520 PCP Bolt Beam Retrofit PR3	N	It is acceptable to core 11" diameter holes through the interior longitudinal wall panels.	N	Y	N	N	N	N	2 - PCI 120
668	R26 #6 Dowel Bars Outside of Anchor Block	2/19/2013		Completed	N/A	7	3/5/2013	2/26/2013	The Cycle 2 Type 1 transverse post tensioning bolt beam retrofit design was transmitted to KG via email on 2/14/13. When integrating these drawings into the model, there were three R23 #6 dowel bars that sit outside the anchor block area. Please provide direction to move the bars up into the concrete or delete them. This occurs in all of the anchor blocks, top and bottom. See attached model shot and Sheet PR4 (R23 #6 Dowel Bars).	SR520 PCP Bolt Beam Retrofit PR4	N	The three R23 #6 dowels that fall outside of the anchor block can be deleted.	N	Y	N	N	N	N	2 - PCI 120

RFI #	Name	Date Submitted	Recycled Date	Status	Respon-sible Party	Days Open	Date Due Back To KG	Date Returned to KG	Reason For RFI	Drawings Affected	Spec Section	WSDOT PE Comments	Repair or NC	Change?	Contractor Option	New Drawings Provided	FB&L	Associated RFI's	Disposition
669	Placing Tolerances for Bolt Beam Retrofit	2/20/2013		Completed	N/A	12	3/6/2013	3/4/2013	The Cycle 2 Type 1 transverse post tensioning bolt beam retrofit design was transmitted to KG via email on 2/14/13. Sheet PR3 Note #6 states that the contractor shall support duct such that each duct maintains the required, level profile within a placement tolerance of 1/8" during all phases of work. 1/8" tolerance for the duct placement will be difficult, if not impossible, to maintain. Additionally, unless the duct is restrained by extraordinary means, during stressing the duct will move to "find its' location" based on where the tendons inside the duct are. See attached Sheet PR3 and SDI RFI request form. Please confirm that the placement tolerance for the PT duct may be revised to plus or minus ¼" through all exterior wall penetrations and anchor blocks and that the duct may not touch the edge of the cored holes through the three each interior walls.	SR520 PCP Bolt Beam Retrofit PR3	2.14.5.2.4	WSDOT agrees with revising the duct placement tolerance to 1/4" through the exterior wall penetrations and anchor blocks. Based on information provided by SDI and KG, there is very little clearance between the inside of the HDPE duct and the OD of the strand pattern. We agree with allowing the duct and tendon to "find it's natural position" during the stressing operation. The contractor has proposed an acceptable criteria of not having the duct in contact with the concrete at the interior wall penetrations.	N	N	N	N	N	N	2 - PCI 120
670	HDPE to Steel Pipe Connection	2/20/2013		Completed	N/A	6	3/6/2013	2/26/2013	The Cycle 2 Type 1 transverse post tensioning bolt beam retrofit design was transmitted to KG via email on 2/14/13. Detail 2 on Sheet PR3 references the use of a neoprene coupler seal to hdpe pipe. This area is then embedded into concrete. Since the coupler is embedded into concrete, please confirm that a heat shrink seal would be acceptable.	SR520 PCP Bolt Beam Retrofit PR3	6-02.3(26)E1	In lieu of the neoprene coupler shown in the plans, it is acceptable to make this coupling using heat shrink in accordance with Standard Specifications Section 6-02.3(26)E1 as Amended by the contract specifications.	N	Y	N	N	N	N	2 - PCI 120
671	Electrical Continuity of Added Rebar and Post Tensioning - Cycle 2 Bolt Beam Retrofit	2/20/2013		Completed	N/A	6	3/6/2013	2/26/2013	The Cycle 2 Type 1 transverse post tensioning bolt beam retrofit design was transmitted to KG via email on 2/14/13. Per RFP Section 2.14.5.2.2, all reinforcing steel and post tensioning systems in the pontoon walls and slabs shall be electrically continuous. Please confirm that the added rebar and PT for the Bolt Beam Retrofit Cycle 2 Design is exempt from this specification. If not, please provide a detail or other information on how K-G is to accomplish the necessary electrical continuity in these areas. See linked Spec section 2.14.5.2.2 and Bolt Beam Retrofit Sheets PR1-PR7.	SR520 PCP Bolt Beam Retrofit PR1-PR7.	2.14.5.2.2	The added reinforcing steel, anchorages and PT shall be made electrically continuous with the existing reinforcing steel. this can be accomplished by expose existing reinforcing steel and using a welded attachment (i.e. a welded piece of reinforcing steel) from the existing steel to the new reinforcing bar. Similar provisions can be made to provide continuity to the anchor plate/steel pipe.	N	Y	N	N	N	N	2 - PCI 120
672	R10 #4 Dowel Rotation - Cycle 2 Bolt Beam Retrofit	2/20/2013		Completed	N/A	6	3/6/2013	2/26/2013	The Cycle 2 Type 1 transverse post tensioning bolt beam retrofit design was transmitted to KG via email on 2/14/13. Sheet PR4 Section "D" Shows the R10 #4 dowels located at 1'-4" from the bottom of the encasement rotated down. Sheet PR5 Section "G" shows the same bars rotated up. Please provide direction on which rotation is correct. See attached model shot and M11 Sheets PR4-PR5.	SR520 PCP Bolt Beam Retrofit PR4 & PR5.	N	It is structurally unimportant whether or not these tails are oriented up or down. The contractor can follow the orientation shown on either Sheet PR4 Section D or Sheet PR5 Section G.	N	Y	Y	N	N	N	2 - PCI 120
673	Dowel Resin Approval - Cycle 2 Bolt Beam Retrofit	2/20/2013		Completed	N/A	7	3/6/2013	2/27/2013	The Cycle 2 Type 1 transverse post tensioning bolt beam retrofit design was transmitted to KG via email on 2/14/13. On Sheet PR1 Note #7, it states that dowels shall be drilled and resin bonded into the existing structure. Please confirm that Hilti RE-500, as seen in the linked RAM, would be an acceptable resin for the dowels. See attached Ram and Sheets PR1-PR7.	SR520 PCP Bolt Beam Retrofit PR1-PR7.	N	As stated in RFI 664, this epoxy is acceptable. The embedment depths for the dowels when using this product are noted in RFI 664.	N	Y	N	N	N	RFI 664	2 - PCI 120
674	Anchor Block Geometry Clarification - Cycle 2 Bolt Beam Retrofit	2/20/2013		Completed	N/A	7	3/6/2013	2/27/2013	The Cycle 2 Type 1 transverse post tensioning bolt beam retrofit design was transmitted to KG via email on 2/14/13. As seen in Sheet PR2, the anchor block faces appear to be plumb or vertical. See attached Sheet PR2. Please confirm that the face of each anchor block may be either perpendicular to the soffit (would be a slight angle) or vertical (no angle to face).	SR520 PCP Bolt Beam Retrofit PR2	N	It is acceptable for the face of the anchor block to be either perpendicular to the soffit or vertical (plumb).	N	Y	N	N	N	RFI 723	2 - PCI 120
679	Type 3 Grout and Water Tight Sealant Confirmatio n Bolt Beam Retrofit Cycle 2	2/21/2013		Completed	N/A	8	3/7/2013	3/1/2013	The Cycle 2 Type 1 transverse post tensioning bolt beam retrofit design was transmitted to KG via email on 2/14/13. On Sheet PR3 Detail 1, it states that the void around the duct will be filled with Type 3 grout and sealed with an approved water tight sealant. Type 3 grout is called out in the 2012 Standard Specifications but this contract is working under the 2008 Standard Specifications. See attached spec section and Sheet PR3. Please provide direction on the water tight sealant and Type 3 grout to be used, or provide the specifications that must be met for each of these materials.	SR520 PCP Bolt Beam Retrofit PR3	WSDOT Standard Specificatio n 9-20.3	The callout for the Type 3 grout is incorrect. Instead, a Type 2 grout per the WSDOT 2012 Standard Specifications should be used for grouting back the duct at the interior walls. For the watertight sealant, WSDOT requests the contractor to use Greenstreak Hydrotite hydrophilic waterstop (or approved equal). Attached is a detail showing how the waterstop is to be installed. The contractor should follow the details from this attachment for the Existing Wall - New Pipe. The waterstop detail is only required on post-tensioning penetrations located near the keel slab (B1 and B2 tendons). The contractor shall provide WSDOT with a submittal showing the specific Hydrotite waterstop that will be used, how the waterstop will be adhered to the concrete and HDPE pipe, and any other pertinent information related to waterstop installation and casting the penetration back with grout.	N	TBD	N	N	N	RFI 682 RFI 747	2 - PCI 120

RFI #	Name	Date Submitted	Recycled Date	Status	Respon-sible Party	Days Open	Date Due Back To KG	Date Returned to KG	Reason For RFI	Drawings Affected	Spec Section	WSDOT PE Comments	Repair or NC	Change?	Contractor Option	New Drawings Provided	FB&L	Associated RFI's	Disposition
680	Transverse PT Concrete Blister Pourback	2/21/2013		Completed	N/A	18	3/7/2013	3/11/2013	The Cycle 2 Type 1 transverse post tensioning bolt beam retrofit design was transmitted to KG via email on 2/14/13. These drawings show two deck anchor blocks (upper blocks) in each end of the Type 1 Pontoons. Utilization of any of the current approved concrete mixes may result in air voids between the anchor block and the underside of the deck. Additionally, regardless of the concrete mix used, air voids between the anchor block and the underside of the deck may be difficult, if not impossible, to avoid. Some possible solutions are as follows: (1) Utilize a grout mix similar to the attached example. (2) Utilize the current single soffit falsework lowering hole through the deck bolt beam, located directly over the anchor block area, to place the concrete. (3) Core additional 2" minimum diameter holes through the deck bolt beam above the anchor block area on a 2'-0" grid pattern to utilize as vent holes and vibrator access holes. This would result in approximately 20 holes in the deck at each anchor block location. (4) Add sleeves in the A-Pontoon at the future anchor block locations to prevent the need for having to core through the deck at a later date. These holes would be utilized as placement, air vent, and vibrator access holes. Please direct KG how to proceed.	PR1-PR7	N	Responses to the four items from this RFI are as follows: 1. The proposed grout mix is not acceptable. It has an excessively high cement content and no coarse aggregate, and it won't perform well in the thick concrete anchor blocks. WSDOT is receptive to contractor proposals for other flowable concrete mixes including self-consolidating concrete. 2. It is acceptable to utilize the soffit falsework lowering holes to aid in placing and venting anchor block concrete. 3. Vent holes spaced at 2'-0" are not acceptable. Attached is a sketch showing acceptable locations for venting and placement holes that WSDOT approved on 03/08/13. It is important to layout and avoid core drilling through the bolt sleeves, post-tensioning duct and the B101 #5 tie bars. 4. Based on discussions in the field over the last couple of weeks, WSDOT understands that access for anchor block venting and concrete placement was included in the top slab pours of Pontoon A.	N	TBD	N	N	N	N	2 - PCI 120
682	Specificatio ns and Materials Acceptance for Transverse Post Tensioning Materials	2/22/2013		Completed	N/A	13	3/8/2013	3/7/2013	There are not any specified requirements for the materials indicated on Drawing PR3. Please provide acceptance criteria.	PR3	N	Acceptance criteria for these materials is as follows: 1. Chockfast Gray -- Visual acceptance 2. Neoprene coupler -- Deleted 3. Steel Strap -- Deleted 4. Type 3 Grout -- This shall be changed to a Type 2 grout per the WSDOT 2012 Standard Specifications. Acceptance based upon Satisfactory Test Report for samples of materials to be incorporated into the project. Catalog cuts for Acceptance prior to use of material 5. Water Tight Sealant -- Greenstreak Hydrotite hydrophillic waterstop shall be used, (See attached Data Sheet). Acceptance based on catalog cuts prior to use of material. Visual inspection at time of use. 6. Smooth 8" Schedule 40 HDPE Pipe -- Manufacturer's Certificate of Compliance 7. 8" Schedule 40 Steel Pipe -- Manufacturer's Certificate of Compliance, CMO 8. Bearing Plate -- Manufacturer's Certificate of Compliance, CMO	N	N	N	N	N	RFI 679 RFI 747	2 - PCI 120
685	R10 and R11 Dowel Embedment Depth - Cycle 2 Bolt Beam Retrofit	2/25/2013		Completed	N/A	11	3/11/2013	3/8/2013	The Cycle 2 Type 1 transverse post tensioning bolt beam retrofit design was transmitted to KG via email on 2/14/2013. Per Sheet PR1, #4 dowel bars must be embedded a minimum of 7". See attached Bolt Beam Retrofit Sheets PR1-PR7 and approval email allowing 4" embedment for R10 and R11 dowel bars (If Hilti RE 500 is used). Please confirm per the attached approval email that 4" embedment is acceptable for the R10 and R11 dowel bars if Hilti RE 500 is used as the anchoring epoxy resin.	PR1-PR7	N	It is acceptable to reduce the embedment of the R10 and R11 dowel bars for the exterior anchor encasement to 4" inches provided the Hilt RE 500 epoxy resin is used for anchoring the bars. That is consistant with the Hilti recommendations.	N	TBD	Y	N	N	N	2 - PCI 120
687	Bolt Beam Retrofit Crack Mapping Requiremen ts	2/26/2013		Completed	N/A	8	3/12/2013	3/6/2013	Per the attached RFI #658, any cracks in the anchor block will need to be repaired per requirements of the RFP. RFP section 2.14.5.2.11 states that an in depth crack inspection shall occur no less than ten days after the initial set of the last concrete placed. All cracks must also be repaired prior to stressing. The timing of crack mapping and crack repair is unclear for the bolt beam retrofit anchor blocks. See attached specification section and RFI #658. Please provide direction for the timing of crack mapping and potential repair of cracks that may develop in the anchor blocks prior to post tensioning.	N	N	It is not WSDOT's intent for the crack mapping and crack repair to hold up construction activities. It is acceptable to WSDOT for the contractor to schedule the crack mapping and repair activities prior to tendon stressing with sufficient time to complete the repairs (if any) prior to stressing. WSDOT suggests completing all mapping and repair either two or three days prior to stressing. This will allow sufficient time for the repairs to gain strength prior to the stressing work. WSDOT acknowledges that this will likely result in mapping and repair occurring prior to ten days after concrete placement that is required by the RFP.	N	Y	Y	N	N	RFI 658 RFI 740	2 - PCI 120

RFI #	Name	Date Submitted	Recycled Date	Status	Respon-sible Party	Days Open	Date Due Back To KG	Date Returned to KG	Reason For RFI	Drawings Affected	Spec Section	WSDOT PE Comments	Repair or NC	Change?	Contractor Option	New Drawings Provided	FB&L	Associated RFI's	Disposition
688	Transverse Post Tensioning Sequencing	2/26/2013		Completed	N/A	9	3/12/2013	3/7/2013	The Cycle 2 Type 1 transverse post tensioning bolt beam retrofit design was transmitted to KG via email on 2/14/13. Per Sheet PR3 Note 10, tendons T1 and T2 shall be stressed from alternate ends and B1 and B2 shall be stressed from alternate ends. See attached SDI RFI Request and Sheet PR3. Please confirm that it would be structurally acceptable to stress all tendons on one side of a pontoon.	PR3	N	WSDOT agrees with the contractor's proposal to revise the stressing sequence to allow all of the tendons to be stressed from one side of the pontoon. Considering the fact the tendons are straight and have a large ratio of duct area/strand area, we agree that frictional losses will be negligible and the anchor set losses will equalize across the tendon.	N	N	Y	N	N	N	2 - PCI 120
691	High Level Vent/Upper Anchor Block Conflict - Type 3 Bolt Beam Retrofit	3/1/2013		Completed	N/A	13	3/15/2013	3/14/2013	The Cycle 2 Type 3 transverse post tensioning bolt beam retrofit design was transmitted to KG via email on 2/25/13. During the integration process of the of the new AR Sheets into the 3D Model, K-G discovered that the high level vents are in conflict with the upper anchor block. This occurs in each of the Type 3 Upper Anchor Galleries. See attached model shot showing the conflict. Please provide direction to fix this conflict.	AR1-AR7	N	It is acceptable to extend the high level vent pipe longitudinally so that it stubs out past the end of the anchor block. WSDOT will be developing details of this and will be providing them to the contractor shortly. It is WSDOT's understanding that the high level vents won't be installed until the pontoons are at Lake Washington. The vent extension will require a system to hang the vent from the soffit of the anchor block. Attached is a detail that identifies the location and size of the hanger inserts so they can be installed prior to casting the anchor block. See attached PDF below by Mark Gaines "Vent hanger inserts.pdf"	N	Y	N	N	Y	N	2 - PCI 120
694	Temporary Support of Transverse PT	3/1/2013		Completed	N/A	5	3/15/2013	3/6/2013	The Cycle 2 Type 1 Transverse post tensioning bolt beam retrofit design was transmitted to KG via email on 2/14/13. Transverse Post-Tensioning Note #6 states that the contractor shall support the duct such that each duct maintains the required, level profile within a placement tolerance of plus or minus 1/8" during all phases of work. The same note is found on Type 3 Transverse PT bolt beam retrofit design drawings. This tolerance was revised per linked RFI #669. KG intends to support the pipe with (2) uni-strut supported by (2) ½" all thread. See linked sketch and cut sheet for clarification. Please confirm that this support qualifies as temporary stay-in place construction aid and as a temporary stay-in place construction aid, please confirm that foreign and non-stainless steel embeds are acceptable.	PR3	N	The proposed method to temporarily support the PT duct is acceptable. The proposed hardware is all zinc coated and will not hold up well in the pontoon environment. This hardware will need to be removed from the pontoons. If access issues make removal impossible or impractical, consideration should be given to components that are corrosion resistant. Possible options include 304 stainless steel or fiberglass/plastic components. Since these materials are all temporary in nature, it is acceptable to use foreign steel.	N	TBD	Y	N	N	N	2 - PCI 120
702	Core Hole Size for Transverse PT Cycle 2 Type 3 Bolt Beam Retrofit	3/8/2013		Completed	N/A	5	3/22/2013	3/13/2013	The Cycle 2 Type 3 transverse post tensioning bolt beam retrofit design was transmitted to KG via WSDOT to KG SL 162. The plans to do not call out a specfic core hole size. Please confirm per the attached email, that 8" holes on the exterior and 9"holes on the interior walls are acceptable for the Type 3 Bolt Beam Retrofit.	AR1-AR7	N	The 8" core holes for the exterior and the 9" core holes for the interior walls for the transverse post-tension is acceptable.	N	N	Y	N	N	N	2 - PCI 120
704	HDPE SDR 17 Instead of Schedule 40 Pipe Bolt Beam Retrofit	3/11/2013		Completed	N/A	2	3/25/2013	3/13/2013	The cycle 2 type 1 transverse post tensioning bolt beam retrofit design was transmitted via email on 2/14/2013. Detail 1 on sheet PR3 of WSDOT to KG serial letter 162 stated that smooth 8" schedule 40 HDPE pipe should be installed for the bolt beam retrofit. SDI would like to use SDR 17 HDPE instead of schedule 40 HDPE as schedule 40 HDPE pipe is unavailable in an 8" size. See attached drawing, pipe specifications, acceptance sheets, and picture of approved pipe on site. Please confirm that HDPE SDR 17 pipe is acceptable to use instead of schedule 40 HDPE pipe.	PR3	N	The proposed duct is acceptable in lieu of the HDPE Schedule 40 pipe. This pipe conforms to ASTM D3350 with a cell classification of 445574C.	N	N	Y	N	N	N	2 - PCI 120
709	135 Degree Hooks into 180 Degree Hooks in Bolt Beam Retrofit - Type 1/1A/3	3/13/2013		Completed	N/A	2	3/27/2013	3/15/2013	Gerdau wants to have the option of using 180 degree hooks on all of the transverse bolt beam anchor block retrofit bar. Bending 180 degree hooks would occur in the shop. See attached Bolt Beam Retrofit Sheet PR5 for example of bar with 135 degree tails. Please confirm that it would be acceptable for Gerdau to use a 180 degree hooks in every location 135 hooks was called out in the Type 1 and Type 3 Transverse PT Bolt Beam Retrofit anchor blocks in Cycle 2 per the attached approval email.	PR5	N	It is acceptable to use 135 degree hooks or 180 degree hooks on the anchor block bars.	N	Y	N	N	N	N	2 - PCI 120
711	Pressure Testing of Transverse PT Bolt Beam Retrofit	3/13/2013		Completed	N/A	2	3/27/2013	3/15/2013	Per the attached Change Order #6, the contractor is to test each duct for air tightness. Each duct gets filled with 50 psig of air and after 1 minute can only lose 25 psig. Please confirm that this requirement does not apply to the transverse post tensioning in the bolt beam retrofit for the Type 1/1A and 3 Pontoons Cycle 2.	PR1-PR7, AR1-AR7	N	WSDOT agrees that the pressure testing requirement does not apply to the external transverse post-tensioning ducts in the bolt beam retrofit for the Type 1/1A and 3 pontoons.	N	N	N	N	N	N	2 - PCI 120

RFI #	Name	Date Submitted	Recycled Date	Status	Respon-sible Party	Days Open	Date Due Back To KG	Date Returned to KG	Reason For RFI	Drawings Affected	Spec Section	WSDOT PE Comments	Repair or NC	Change?	Contractor Option	New Drawings Provided	FB&L	Associated RFI's	Disposition
715	Acceptance for Hilti RE 500 SD NCR #353	3/14/2013		Completed	N/A	1	3/28/2013	3/15/2013	In the attached NCR #353, K-G used an unapproved epoxy (Hilti RE 500-SD). The RE-500-SD was used to patch back excess doweling holes that were conflicting with existing pontoon rebar at all keel slab anchor block locations in Q and R Pontoons. The product was also used for doweling of 75-ea #7 dowels @ SE of R Pontoon keel slab anchor block. RFI #664 and #673 specified that Hilti RE-500 epoxy shall be used. See attached NCR #353 and Hilti RE 500-SD Specifications sheet. Please confirm that: 1) Hilti RE-500-SD is acceptable for installing rebar dowels and patching back excess dowel holes at the keel slab transverse PT anchor blocks as described above. 2) Hilti RE-500-SD may be used at all Type 1/1A and 3 transverse PT anchor blocks to install rebar dowels and to patch back excess dowel holes. 3) The embedment depth of rebar dowels for the Hilti RE-500-SD is the same as that defined for use with Hilti RE-500 per RFI #664.	N	N	WSDOT confirms that: 1) Hilti RE-500-SD is acceptable for installing rebar dowels and patching back excess dowel holes at the keel slab transverse PT anchor blocks as described above. 2) Hilti RE-500-SD may be used at all Type 1/1A and 3 transverse PT anchor blocks to install rebar dowels and to patch back excess dowel holes. 3) The embedment depth of rebar dowels for the Hilti RE-500 SD is the same as that defined for use with Hilti RE-500 per RFI #664. The Hilti RE500 SD is equal to or better than Hilti RE 500.	N	N	Y	N	N	N	2 - PCI 120
721	SCC Mix For Anchor Blocks Bolt Beam Retrofit	3/15/2013		Completed	N/A	3	3/29/2013	3/18/2013	See attached SCC mix design and approval email. Please confirm per the attached approval email that K-G is to use SCC 24" spread mix for the anchor blocks pours for the Bolt Beam Retrofit.	PR1-PR7 and AR1-AR7	N	Confirmed. It is acceptable to use the SCC concrete mix design or the approved Pontoon concrete mix design for the lower anchor blocks in the type 1/1A and 3 Pontoons. The SCC concrete mix design should be used in the upper anchor blocks in the type 1/1A and 3 Pontoons.	N	Y	N	TBD	N		2 - PCI 120
723	Anchor Block Geometry - Type 3/1/1A	3/18/2013		Completed	N/A	10	4/1/2013	3/28/2013	There are two questions in this RFI regarding geometry of upper anchor blocks for the transverse PT bolt beam retrofit in Cycle 2: 1) RFI #674 states that it is acceptable for the face of the anchor block to be either perpendicular to the soffit or vertical (plumb) for Type 1 Pontoon. Please confirm that this is acceptable for vertical face of the anchor block on the Type 3 Pontoon. 2) For the soffit face on the bottom of both the Type 1 and Type 3 anchor blocks Sheet PR2 indicates that the soffit face needs to be parallel to the top deck soffit. Please confirm that the soffit face of each anchor block may be either parallel to the soffit or level in the Type 1 and 3 Pontoons. See attached sheet PR2 and RFI #674.	PR1-PR7 and AR1-AR7	N	1. For the Type 3 pontoon, the answer provided to RFI #674 also applies. The face of the anchor block may be either plumb or perpendicular to the top slab. 2. For the top anchor blocks, it is acceptable for the soffit of the anchor block to be either parallel to the top slab or flat. If the soffit is constructed flat, the minimum thickness of the anchor block shall be maintained. Considering the sloping profile of the top slab, some regions of the anchor block will be thicker than the dimensions shown on the retrofit plan sheets.	N	TBD	N	N	N	RFI 674	2 - PCI 120
724	Thermal Control Transverse PT Anchor Blocks	3/18/2013		Completed	N/A	8	4/1/2013	3/26/2013	Note 11 in the cycle 2 Bolt Beam Retrofit transmitted to KG 2/15/13 states measures shall be taken to minimize cracking. RFI #658 was written to clarify the thermal control requirements for the anchor block concrete and it was "...stated that cooling the core doesn't seem warranted. Contractor should monitor core and perimeter temperatures on the initial anchor block pours. If temperature differentials are excessive and/or cracking is observed modifications can be made to provide internal cooling." KG received the attached email dated 03/14/13 that directed us to install thermal control cooling pipes in 3 of the 4 lower anchor blocks in R pontoon. Attached please find the thermal control tables and cooling pipe layout provided by CTL. We installed cooling pipes in the southern two anchor blocks according to table Y with the cooling pipes spaced 2' on center, in the northwest anchor block we installed cooling pipes according to table Z with the cooling pipes spaced 1' on center, and the northeast anchor block has sensors installed but no cooling pipes and will follow table X. We will monitor the temperatures over the 3 day thermal control period and inspect the anchor blocks for any cracking that may occur over the next 10 days per the email. Please confirm that thermal control cooling pipes will not be required in any of the transverse post tensioning anchor blocks except for the 3 lower anchor blocks of R pontoon that were installed based on the direction of the attached email.	PR1, AR1	N	Based on the results of the four lower anchor blocks in Pontoon R, it was noted that there wasn't appreciably more cracking in the anchor block without cooling pipes when compared with the three anchor blocks that used cooling pipes. Based on this, WSDOT agrees that cooling pipes are only required in the three lower anchor blocks on Pontoon R based on the attached email. All other anchor blocks can be constructed without cooling pipes.	N	TBD	Y	N	N	RFI 658	2 - PCI 120
726	Fender Insert Cored Out on A Pontoon	3/18/2013		Completed	N/A	10	4/1/2013	3/28/2013	Coring for transverse PT in A pontoon upper bolt beam area will remove an existing fender insert. This insert is shown on the M11's. Please confirm per the attached approval email that removing this insert is acceptable. See WSDOT email and drawing showing location of insert.	AR1-AR7	N	It is acceptable to remove this insert as part of the transverse PT retrofit work.	N	TBD	N	N	N	N	2 - PCI 120
727	Added #5 Bar In Anchor Blocks	3/18/2013		Completed	N/A	8	4/1/2013	3/26/2013	K-G received direction to add two #5 bars in the lower anchor blocks on R Pontoon. Please confirm per the attached email that WSDOT wants to add #5 bar in all anchor blocks for all Cycle 2 Type 1/1A and 3 Pontoons.	PR1-PR7 and AR1-AR7	N	Confirmed. Adding two horizontal #5 bars with a standard 90 degree tail in the vertical face parallel with the 1L and 5L walls on the face of the anchor block closest to 2L and 4L walls was requested by WSDOT Bridge and Structures.	N	Y	N	N	N	N	2 - PCI 120

RFI #	Name	Date Submitted	Recycled Date	Status	Respon-sible Party	Days Open	Date Due Back To KG	Date Returned to KG	Reason For RFI	Drawings Affected	Spec Section	WSDOT PE Comments	Repair or NC	Change?	Contractor Option	New Drawings Provided	FB&L	Associated RFI's	Disposition
736	Post Tensioning Restrictions Cycle 2-6	3/21/2013		Completed	N/A	6	4/4/2013	3/27/2013	In the attached Serial Letter 224, K-G asked WSDOT to relax the restriction to install PT strand 10 days prior to stressing. In lieu of a letter response, WSDOT decided to answer the letter via email (attached). Note: SDI will follow the standard Specifications and they will implement a corrosion inhibitor to reduce schedule impacts. Please confirm per the attached email that SDI/K-G are to install PT strand and stress per the Standard Specifications.	N	6-02.3(26)F	Confirmed.	N	N	N	N	N	N	6 - Clarification Provided
738	Upper PT Anchor Block Strength Before Stripping - Type 1/3	3/21/2013		Completed	N/A	7	4/4/2013	3/28/2013	See attached email approving upper anchor blocks in Cycle 2 to be stripped after reaching 2500 psi (if wet cure is utilized). Please confirm per the attached email that stripping of the Cycle 2 Upper Anchor Blocks can occur after they reach 2500 psi.	PR1-PR7 and AR1-AR7	N	As described in the attached email, it is acceptable to strip the anchor blocks at 2500 psi provided thermal blankets and a wet cure are applied and maintained for a total of 3 days from when the concrete was placed. It is not acceptable to replace the wet cure with a curing compound.	N	N	Y	N	N	N	2 - PCI 120
740	Structural Crack Repair at Transverse Anchor Blocks	3/23/2013		Completed	N/A	6	4/6/2013	3/29/2013	In reference to RFI WSDOT 687, please confirm the only cracks that need to be repaired on the transverse anchor blocks prior to post tensioning are structural cracks at the interface (construction joint) between the anchor block and the existing exterior walls. All other structural and non-structural crack repair on the anchor blocks can be completed after post-tensioning. KG will fix cracks on the transverse anchor blocks prior to post tensioning only if it does not affect the critical path schedule. Please confirm it is acceptable to stress transverse and longitudinally prior to all cracks in the transverse anchor blocks being repaired.	PR1-PR7 and AR1-AR7	N	This request is acceptable. Any structural cracks between the anchor blocks and the exterior pontoon walls need to be repaired prior to transverse and longitudinal post-tensioning. Any other cracks in the anchor blocks can be repaired either before or after post-tensioning is complete.	N	N	N	N	N	RFI 687	2 - PCI 120
746	Type 2 Grout for Annular Space Pour Back - Sika 212	4/1/2013		Completed	N/A	15	4/15/2013	4/16/2013	Per Sheet PR3 of the bolt Beam Retrofit Drawings, K-G was to use a Type 3 grout to pour back the annular space between the interior walls and the HDPE pipe. Per RFI #'s 679 and 682, K-G was able to use a Type 2 grout instead. Please confirm that K-G can use Sika 212 as a Type 2 grout per the 2012 spec. to grout back the annular space on sheet PR3 of the bolt beam retrofit drawings. Also, please provide acceptance criteria for the grout. See attached approval email, 2012 Specification, and Sika 212 cut Sheet, Sheet PR3, and attached RFI's # 679 and 682.	PR3	N	It's confirmed that SikaGrout 212 is an acceptable product for filling annular spaces around the transverse PT duct at the interior walls. We are not relying ont he structural capacity of this material, so minimum compressive strength is not really an important factor. The minimum compressive strength at 28-days shall be 4000 psi. Acceptance criteria shall be verification of compressive strength at 28 days and catalog cut.	N	TBD	Y	N	N	RFI 679 RFI 682	2 - PCI 120
747	Revise Type 1 Pontoon Stressing Sequence for Cycle 2	4/2/2013		Completed	N/A	6	4/16/2013	4/8/2013	SDI shop drawings show a stressing sequence with a diagonal split of tendons stressed by each ram. During Cycle 1 we discovered that the ram performing the lower stressing sequence had difficulty reaching the highest tendons on the wall. SDI shop drawings that were recently submitted for Cycle 3-6 show a revised stressing sequence with a horizontal split of tendons stressed by each ram. Would it be acceptable to stress the tendons for Cycle 2 with the revised stressing sequence shown on the Cycle 3-6 drawings? See linked RFI request by SDI and submittal 153.	N	N	WSDOT takes no exceptions to the contractor-proposed revisions to the stressing sequence.	N	N	Y	N	N	N	6 - Clarification Provided

KGM

SR-520

Recommendations for the Repair and Strengthening of the Cycle 1 Pontoons

FINAL

April 2013

Ben C. Gerwick, Inc.
a COWI company

Contract No.: 008066
Change Order No.: 108
Page 73 of 105

KGM

SR-520

Recommendations for the Repair and Strengthening of the Cycle 1 Pontoons

Document no.	2012-069-0001
Version	FINAL
Date of issue	April 2013

Prepared	Sam Yao, Fariborz Vossoughi
Checked	Richard Mogel
Approved	Dale E. Berner

Table of Contents

1	**Executive Summary**	**2**
2	**Condition Assessments in the Cycle 1 Pontoons**	**3**
2.1	Introduction	3
2.2	The Keel Slabs and Bottom Bolt Beams	3
2.3	The Top Decks and Top Bolt Beams	6
2.4	End Walls	6
3	**Repair Plan**	**8**
3.1	The Repair Approach	8
3.2	Epoxy Injection	9
3.3	External Post-Tensioning	11
3.4	Externally Bonded Carbon FRP System	11
3.5	Spall Repair	13
3.6	Recommended Repair Plan	14
4	**Technical References**	**15**
5	**Project Documents**	**16**
6	**Appendix A - Repair Plan**	**18**

1 Executive Summary

Ben C. Gerwick, Inc. is retained by Kiewit-General-Mason Joint Venture (KGM), the design-build contractor of the SR-520 replacement project, to evaluate and recommend viable repair plans for the concrete cracks and spalls on Cycle 1 pontoons (i.e., Pontoon W, V, U, and T). The main objectives of the work are:

1. Develop a repair program for the existing cracks and spalls. The repairs must be applicable to the floating pontoons under their current condition on the project site.
2. The repair program should ensure the structural strength, watertightness, durability, and performance of the floating bridge for a 75 years service life with low maintenance. No leakage to the pontoon is allowed.

This report documents the work in the following aspects:

1. Condition assessments of the existing Cycle 1 Pontoons;
2. Recommendations of the pontoon repair approach, repair measures, and a repair plan;
3. Prediction of the service performance of the repaired pontoons.

The work to date has reached the following conclusions and recommendations:

1. Overall, the Cycle 1 Pontoons are in a generally sound condition. The areas to be repaired are limited to a number of local zones. These pontoons can be repaired and strengthened to meet all of the performance requirements of the bridge for the 75 years service life.
2. The damages are mostly concrete cracks and spalls on the top decks, keel slabs and end walls. It is important to implement a structural strengthening system as well as repair of the existing damages.
3. No single repair measure can adequately address all of the critical issues in this repair project. The recommended strategy is to implement a combination of repair measures, including crack repair with epoxy injection, external post-tensioning, structural strengthening with externally bonded carbon fiber reinforced polymers (CFRP), and patch repairs of spalls.
4. In order to ensure the repair quality and quality control, it is recommended that all structural repairs on the submerged part of the pontoon be performed in a dry environment.

2 Condition Assessments in the Cycle 1 Pontoons

2.1 Introduction

The Cycle 1 Pontoons consists of Pontoons W, V, U. and T, which were fabricated in Grays Harbor, WA, in 2012. To our knowledge, condition surveys of the pontoons regarding concrete damages have been made at three separate times:

- A crack mapping survey was made on at least a major part of Pontoon V and W prior to the post-tensioning in Grays Harbor (Project Documents /17/).
- A condition survey was made on the pontoon damages after the post-tensioning in Grays Harbor.
- A condition survey is being conducted in the end bays of all Cycle 1 Pontoons and in center bays of Pontoon W where the transverse post-tensioning has been implemented. The extent of the survey includes mapping of damages on both interior and exterior faces of the keel slab and end walls. At this time, the survey data on Pontoon V and Pontoon W are available.

The pontoon condition assessment in this report is primarily based upon the condition survey data available to Ben C. Gerwick, Inc. (BCG) to date. The assessment will be updated as more survey data are available.

Overall, the Cycle 1 Pontoons are in a generally sound condition. Structural damages occurred in a few local areas, i.e., the end bays of all Cycle 1 Pontoons and the middle bays of Pontoon W where transverse post-tensioning was applied. In general, all of the Cycle 1 Pontoons exhibit similar damage patterns. It is anticipated that the repair plan as developed for Pontoons V and W will be applicable to Pontoons U and T.

The most significant damages are structural cracks and spalls on the end walls, top deck and keel slab at the end bay near the interior longitudinal walls, which reportedly occurred during or immediately after the post-tensioning of the pontoons in Grays Harbor. The post-tensioning strands were then released and the concrete spalls were removed and replaced with the cast-in-place concrete and additional steel reinforcement. The pontoons were prestressed again. All cracks were monitored for at least five days until the cracking appeared to stabilize. Afterwards, structural cracks were repaired with epoxy injection or epoxy filling, and other non-structural cracks were coated with waterproof coating.

2.2 The Keel Slabs and Bottom Bolt Beams

The crack/spall mapping on the keel slabs and bolt beams of Pontoons V and W are illustrated in Figure 2-1. The cracks and large spalls on the keel slabs are of the most structural significance, since they have not been repaired and manifest the following distinct features:

1. The cracks typically run up to 4' to 5' in the vertical direction on the end wall from the pontoon keel and extend up to 10' into the keel slab. The vertical cracks on the wall are connected to the longitudinal cracks in the keel slab. Figure 2-1 shows the crack mapping on the end wall (14T) and top/keel slabs of Pontoon V, and the potential problem areas.

2. Many of the cracks run vertically passing the bolt sleeves embedded in the bolt beams (Figure 2-1). When the bolt beams were subjected to tension from the post-tensioning of Pontoon V, it seems that the tension cracks tended to develop on the weak planes through which the bolt sleeves passed.

3. The stabilized crack width through the bolt sleeves generally ranged from 0.01" to 0.05".

4. There are a number of isolated concrete spalls on the keel slabs.

5. In the middle part of Pontoon W where the pontoon will be joined to Pontoon V, post-tensioning in the transverse direction of the pontoon was applied. Structural cracks mostly occurred near the post-tensioning anchorage on the keel slab. The cracks typically range from 0.006 inch to 0.01 inch in width and 2-3 feet in length (see Appendix A). The extent of the repair required in this area is lesser than those at the end bays, likely due to the presence of the longitudinal post-tensioning.

Our analysis concludes that the pontoons should be structurally repaired and strengthened prior to the pontoon assembly and put into service.

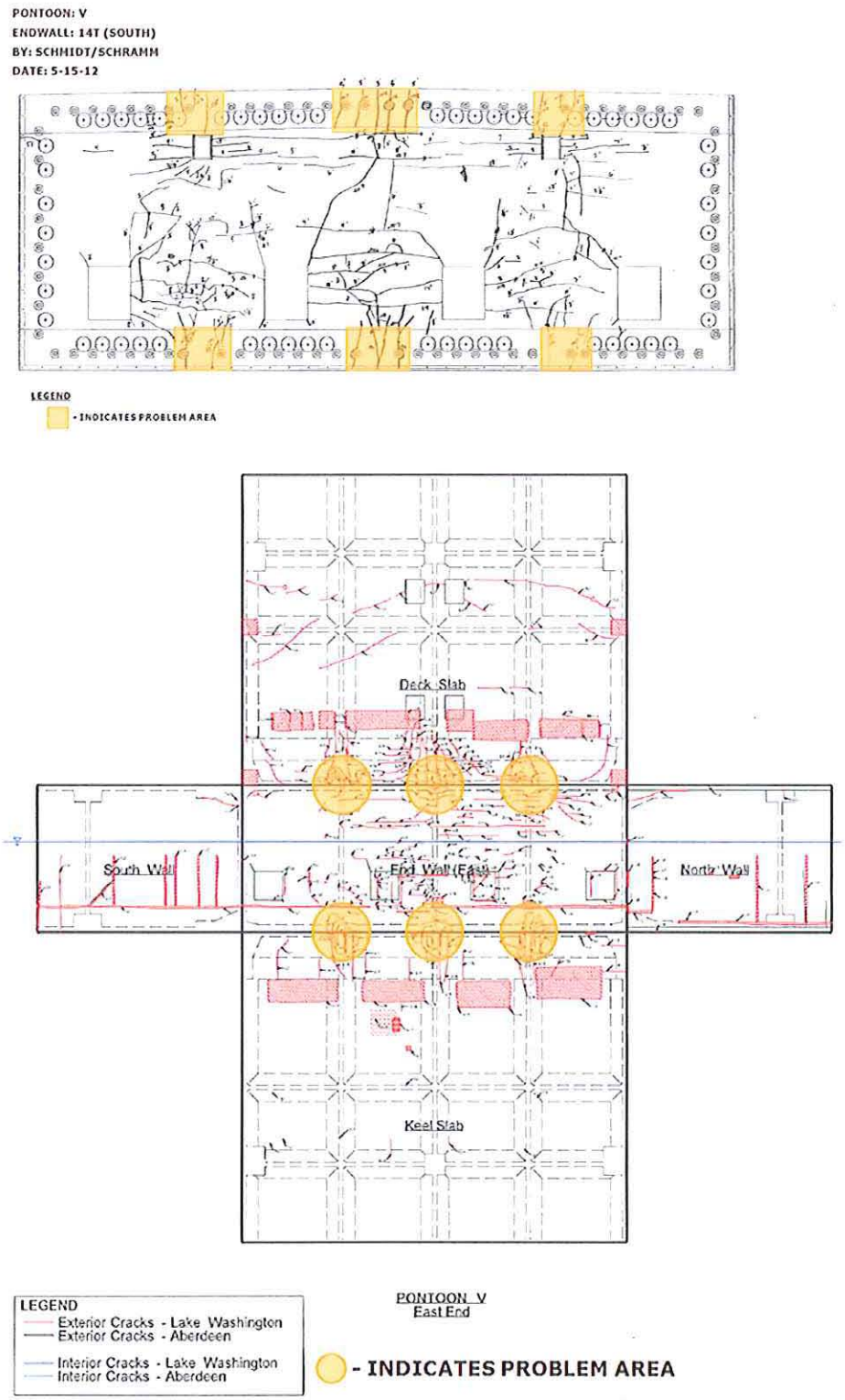

Figure 2-1. Crack mapping at the end wall, keel/top slabs, and potential problem areas

2.3 The Top Decks and Top Bolt Beams

The areas to be repaired on the top decks and top bolt beams are similar in nature to those on the keel slabs and bottom bolt beams. The discussions in Section 2.2 are generally applicable to the top decks and bolt beams.

All structural cracks on the top decks were repaired with epoxy filling by gravity feed. This repair method is acceptable. For structural repairs, it is important to achieve full depth penetration of epoxy. It is recommended that cores be taken to verify the epoxy penetration depths and be tested per ASTM C 496, "Splitting Tensile Test"[1].

Recent surveys show that a number of structural cracks on the top decks have not been repaired. These cracks should be repaired with epoxy injection as shown on the repair plan in Appendix A.

There are numerous hairline cracks on the top deck in the middle part of the pontoons (Project Documents /1/). These cracks occurred prior to the post-tensioning in Grays Harbor and appear to be thermal and shrinkage cracks and non-structural in nature. A waterproofing coating was applied over these cracks. No noticeable leakage through the cracks has been reported to date.

2.4 End Walls

The end walls of the Cycle 1 Pontoons experienced substantial cracking at the precast yard in Gray Harbors. The cracks occurred during or immediately after the post-tensioning of the pontoons.

Finite element analysis indicates that the end walls were subjected to significant membrane tension and bending due to the post-tensioning. The analysis results are consistent with the field observations of the end walls. Figure 2-2 and Figure 2-3 superimposes a crack mapping of the interior surface onto that of the exterior surface of the end walls T14 and T1 of Pontoon V, respectively. The figures also highlight the through-thickness cracks on the end walls. It is apparent that the through cracks are limited in number and length.

After the post-tensioning in Grays Harbor, the cracks were allowed to stabilize for at least five days, and then repaired with epoxy injection. Recent surveys show a number of structural cracks on the end walls of Pontoon W have not been repaired. These cracks should be repaired with epoxy injection as shown on the repair plan in Appendix A.

At the present time, the end walls still experience leakage/seepage. The extent of the leakage/seepage ranges from water beads to visible running water streaks on the wall. This is a leakage issue and does not imply that structural integrity of the end walls has been compromised. Furthermore, it is recommended that a CFRP waterproofing system be applied to the external face of the end wall to eliminate the leakage of the end walls of Pontoon W.

The end walls of Ponoons V, U, and T are currently protected by neoprene pads and, after the pontoon assembly, will be grouted on the exterior side of the end walls. It is recommended that the end walls be monitored throughout the service life of the bridge. Should any new crack develop or the

existing cracks re-open in the future, the crack should be repaired with epoxy injection and an externally bonded CFRP system be installed on the interior surface of the end wall.

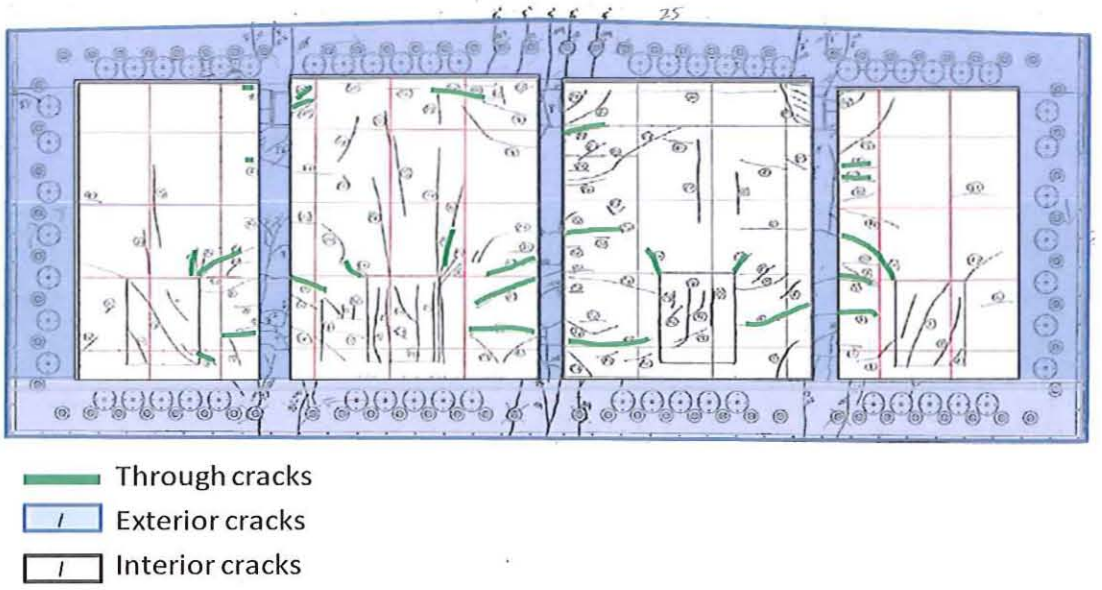

Figure 2-2 Crack mapping of the end wall T14 of Pontoon V

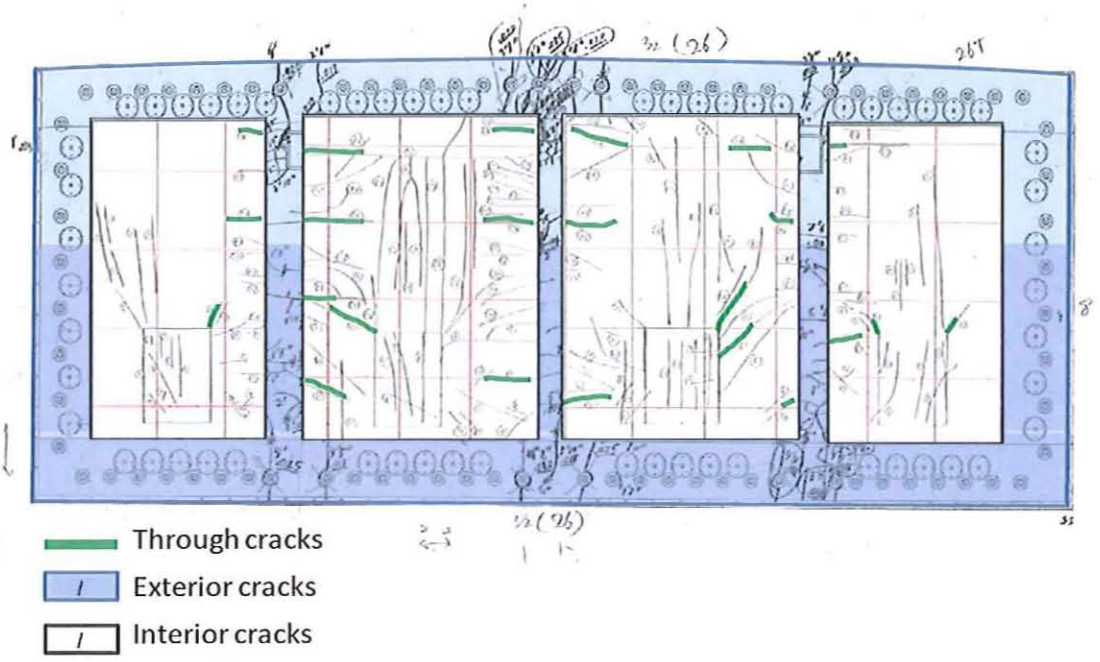

Figure 2-3 Crack mapping of the end wall T1 of Pontoon V

3 Repair Plan

3.1 The Repair Approach

As a mandate of the project, the objectives of the crack repair work are:

1. Restore the structural strength of the Cycle 1 Pontoons;
2. Prevent leakage into the pontoon through cracks under all circumstances;
3. Ensure structural integrity and serviceability for the 75 years design life of the pontoons.

To achieve the objectives, the following repair design criteria are proposed:

1. All structural cracks are to be repaired with epoxy injection to restore the concrete strength.
2. Some local areas of the pontoons are subjected to sustaining tensile stresses, which arose from the fabrication of the Cycle 1 Pontoons. To the maximum extent possible, the sustaining tensile stresses in the pontoons are to be eliminated by external post-tensioning in the direction perpendicular to the structural cracks.
3. A structural strengthening system is to be implemented in the distressed local areas in order to ensure adequate safety margin against all design loads on the bridge under all circumstances.
4. All leaking cracks and active cracks are to be sealed with resin injection and/or waterproof coating or membrane.
5. All thermal and shrinkage cracks should be coated with a waterproof sealant for long-term durability.
6. The repair/strengthening systems and materials are to be verified for long-term durability and performance for the 75 service life of the bridge.

We recommend that the following measures be considered for repair of the Cycle 1 Pontoons:

1. Epoxy injection of structural cracks at keel slab, end bays and top deck;
2. External post-tensioning of the pontoons in the direction perpendicular to major cracks, designed by others;
3. Externally bonded carbon fiber-reinforced polymer (CFRP) system;
4. Waterproofing coating or membrane for non-structural cracks.

3.2 Epoxy Injection

All structural cracks should be repaired with epoxy injections for the following reasons:

1. Restore the structural flexural strength and stiffness across the cracks.

2. Increase the concrete shear strength across the cracks.

3. Allow the external prestress to uniformly transfer across the cracks.

4. Increase durability of CFRP strengthening system: any water penetration through cracks into the interface between the FRP and concrete substrate reduces the long-term bond strength. Therefore, it is essential to repair and seal cracks prior to implementing FRP strengthening system.

5. Enhance watertightness of the pontoon by blocking water penetration through cracks.

In accordance with WSDOT's project criteria, any concrete crack wider than 0.006 inch is structural. All structural cracks are to be repaired with epoxy injection. It is recommended that any crack with a maximum width of 0.004 inch or wider be repaired with epoxy injection for leakage control. If full injection of crack wider than 0.004 inch with low viscosity epoxy resin was not achievable, a waterproof surface sealant should be applied. If a crack will be strengthened with a carbon FRP system, then the waterproof surface sealant should not be applied, because the sealant will likely compromise the bond strength of a carbon FRP system. In fact, a FRP strengthening system will serve as a waterproof membrane to cracked concrete.

The crack survey on the pontoons indicates that many structural cracks exhibit varying crack width along their entire length with decreasing cracks width towards the ends. Past experience concludes that crack repairs are not durable when epoxy fills less than 90% of the cracks, because partially filled cracks are likely to develop new cracks under additional loading or deformation (see Figure 3-1). Therefore, the engineering requirement is to inject epoxy to fill the entire depth of cracks.

Prior to epoxy injection of a crack on a keel slab from its exterior surface, the corresponding inner cell/cells of the pontoon should be free of water. This will require dewatering already ballasted cells. All surface cracks visible on the top of the keel slab inside the cell/cells should be covered with an epoxy sealer. The intention is to confine the crack injection process. ACI 224.1R-07 [2] provides a general industry standard of the epoxy injection procedure, which should be followed in this project. Furthermore, additional requirements specific to this project are discussed below.

- Epoxy resin: The resin should be 100% solid and 100% reactive, with low viscosity and low shrinkage upon curing conforming to ASTM C-881 Type IV, Grade I, Class B (for use between 40 and 60 F) [3].

- Crack cleaning: In order to ensure the repair quality, it is critical to remove dirt and marine growth from the cracks, which would prevent epoxy penetration and bond to concrete. After

installation of injection ports and surface seal, pressurized water and air are to be applied to flush the cracks.

- Distance of ports: Establishing entry and venting ports at proper intervals along the crack. Spacing between the ports governs the depth of injected epoxy into the crack. Based upon the length and width of the cracks, we recommend that the spacings do not exceed 6 inches for cracks less than 0.01 inch wide, and do not exceed 12 inches for cracks more than 0.01 inch wide.

- Injecting the epoxy under pressure: Positive displacement pumps should be used in which the two epoxy components are pumped independently and mixed together at injection nozzle just before entry into the crack. For overhead cracks, start injection from one end and move to the other end. Secure the feed line to the first port. If an adjacent port starts bleeding, cap the port and continue the injection until refusal. Hairline cracks are sometimes not well suited to "pumping to refusal". In those cases, try injecting the epoxy at increased pressure. In order to eliminate the risk of further damaging the pontoon, the maximum injection pressure is to be limited at 250 psi during epoxy flowing into the crack. At final lock off, maintain the pressure at 100 psi for 5 min. The epoxy injection is acceptable if the lock-off pressure does not drop by 10 percent in 5 min.

- Vibrating wire strain gages (e.g., Geokon 4000 model) can be installed across a crack to monitor any movement of the crack during epoxy injection. It is recommended that epoxy injection of first 5 cracks on the keel slab be monitored with strain gages (2 gauges for each crack). The gage readings should be reported to engineers for evaluation. If the measurements confirm that the epoxy injection is performed correctly and the pontoon is not overstressed, no further monitoring with stain gages will be required. Also, the surface seal over the cracks should always be monitored closely for debonding failure during the epoxy injection process.

- After completion of epoxy injection, the ports are removed and surface seals are grinded to prepare for the bonding of CFRP sheets later.

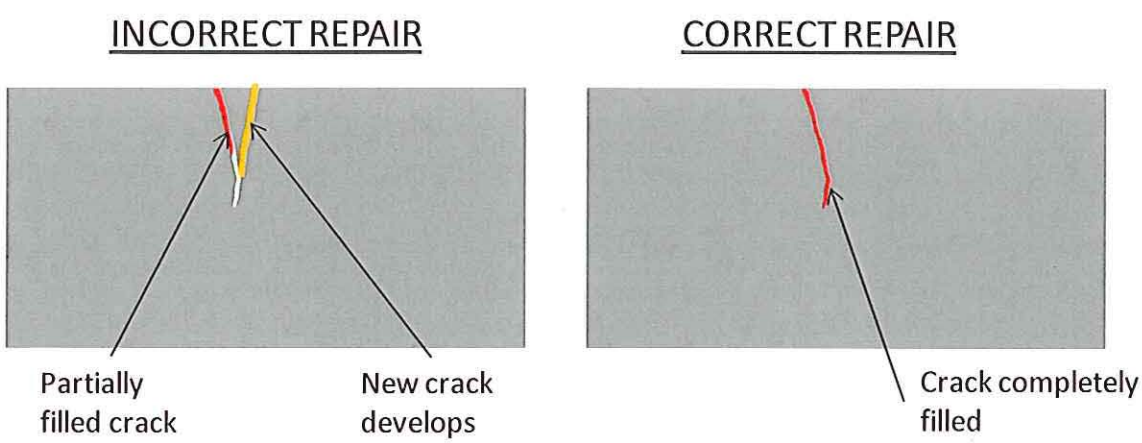

Figure 3-1 The effects of partially filled epoxy injection for structural performance

3.3 External Post-Tensioning

External post-tensioning has been successfully used in floating concrete structures such as the existing Evergreen Point Floating Bridge. In this project, external post-tensioning in the transverse direction of the pontoons is to be applied adjacent to the end walls and directly above the bolt beams of the end bays.

3.4 Externally Bonded Carbon FRP System

The externally bonded FRP system has been increasingly used for strengthening concrete structure. Carbon fiber-reinforced polymer (CFRP) and glass fiber-reinforced polymer (GFRP) are the most common FRP strengthening materials. CFRP is preferred in this project to its high strength and high resistance to fatigue and creep rupture, while glass fibers are extremely hydrophilic and vulnerable to water vapor penetration.

The CFRP strengthening system is recommended in this project for the following reasons:

- Increase structural strength of the bolt beams and end walls where the cracks have compromised the structural safety margin.
- Provide crack control by restraining the existing cracks and preventing new cracks
- Enhance waterproof of the pontoons, since CFRP materials are generally impermeable to water penetration.

The FRP design criteria are in accordance with ACI 440.2R-08 [4] and AASHTO Guide Specifications [5]. The tensile strength of CFRP is reduced by an environmental reduction factor of 0.85 and an additional strength reduction factor of 0.85. To prevent both creep rupture and fatigue failure of CFRP, the maximum stress level in the FRP is computed using elastic finite element analysis for all sustained loads plus maximum cyclic loads moment. The design stresses should be less than 0.55 times the design ultimate tensile strength of CFRP. The FRP design is based upon the assumptions that the transverse post-tensioning will be implemented.

Two types of externally bonded CFRP systems are developed to achieve two different purposes: (1) A CFRP strengthening system is applied to strengthen the bolt beams, top deck and keel slabs, and (2) A CFRP waterproofing system is applied to control leakage/seepage on the end walls of Pontoon W. The application areas of both CFRP systems are shown on the repair plan in Appendix A.

The application of a CFRP strengthening system to strengthen the bolt beams and keel slabs should be consistent with the primary direction as shown on the repair plan in Appendix A. In the primary direction, the FRP system should have the minimum stiffness (i.e., modulus time cross section area of the composite E*A) of 1400 kip per inch width and have a tension capacity of 25 kip per foot width. In the secondary direction (i.e., the direction perpendicular to the primary direction), the FRP system should have a minimum stiffness of 400 kip per inch width. It is acceptable to use a uni-directional FRP system or a combination of uni-directional and bi-directional FRP system to achieve the above engineering requirement. Modulus and cross sectional area of a FRP system should be based on

published design values from the system manufacturers and be verified by field prepared samples per ASTM D3039 [13].

The application of a CFRP waterproofing system to control the leakage/seepage through the end walls should be two (2) layers of uni-directional CFRP sheets. The carbon fibers of the two layers are oriented in two orthogonal directions (i.e., in the vertical direction and horizontal direction). The CFRP sheets are intended to provide a waterproof membrane and control the existing cracks as well. Each layer of CFRP should have a minimum stiffness of 400 kip per inch width.

It is recommended that only pre-qualified CFRP systems be considered in this project. Pre-qualification of a FRP system may be based upon ICC Acceptance Criteria [14].

To a large extent, the effectiveness of the CFRP strengthening system depends on the bond strength between FRP and concrete. At the interface, shear stresses act parallel to the interface and peeling stresses act normal to the interface. As the FRP thickness increases, the failure mode increasingly becomes debonding of the FRP as the interface stresses increase. Weak adhesive or improper adhesive application may result in a bond failure distinguished by delamination that emanates from the FRP ends and proceeds to shear-critical cracking and sudden failure. Hence, ACI 440.2R-08 [4] requires minimum bond strength of 200 psi. The bond strength should be determined per ASTM D7522 [11]. Furthermore, the ACI design guidelines limit the effective strain that CFRP can be designed for, which depends on the concrete strength, the properties of the FRP laminate, and the active bond length over which the majority of bond stress is maintained. In this project, the calculated effective strain of CFRP is within the allowable limit.

When an externally bond FRP system is installed in a dry condition, achieving the required bond strength is not a challenging problem. Nevertheless, proper concrete substrate preparation is crucial for the bond strength. Sand-blasting or other mechanical means is required in order to remove dirt and marine growth, and to achieve a rough surface for strong bond. Prepare the concrete surface profile to achieve CSP 3 or higher per ICRI Guideline No. 03732 [6]. All irregular concrete surface profiles in the areas of the CFRP application should be grinded to smooth surfaces. The ambient temperature at the time of the system installation should be generally within the range of 50° and 90°F (10° and 32°C). In order to achieve satisfactory bond performance, particular attention should be given to the concrete surface moisture condition. The CFRP should be bonded onto a dry concrete surface dry in accordance with engineering requirements and in compliance with product manufacturer's installation guidelines. The system manufacturer's installation procedure should be followed.

Direct tension adhesion testing should be conducted using the method in ASTM D7522 [11] and/or ASTM D4541 [12]. A minimum of three (3) tests should be performed for every FRP application area (i.e., keel slab or end wall). Pull-off tests may be performed prior to installation of the FRP system and on a representative adjacent area to the area being strengthened. The prepared surface of the bonded FRP system should be allowed to cure a minimum of 72 hours before execution of the direct tension pull-off test. If the tests fail the required bond strength, the installer should make proper adjustment to the materials (e.g., epoxy bond agency) and the procedure (e.g., the concrete surface preparation) and conduct additional pull-off tests. If concrete substrate fails in a pull-off test, the test area should be patched with epoxy grout.

Movements of active cracks may cause delamination or fiber crushing in externally bonded FRP systems. Water penetration through unrepaired cracks may deteriorate the bond between FRP and concrete substrate. Therefore, it is important that all substrate cracks wider than 0.006 inch be filled using pressure injection of epoxy and the FRP system cover the entire length of cracks. In addition, it is recommended that the CFRP on the end wall be applied to the entire width of the pontoon as shown on the repair plan (Appendix A).

3.5 Spall Repair

The condition survey identified a limited number of concrete spalls on the keel slabs of the end bays in the pontoons and of the middle bays of Pontoon W. The spalls vary in size and depths. In general, large spalls are to be repaired with suitable concrete patch materials such as polymer modified concrete. Small spalls with a depth less than 3/4 inch have little effect on structural integrity, but their effect on durability of the pontoons is evaluated on a case-by-case basis. If necessary, small spalls are also to be repaired with patch repair. The repair plan in Appendix includes patch repair of concrete spalls.

Polymer modified concrete is recommended for this application due to its improved bond strength and resistance to water or chemical penetration and freezing-thawing damages. Since the depths of all spalls are less than 1.5 inch, the patch material would be polymer modified cement mortar without coarse aggregates.

The patch repair should follow the industry standard practice in ACI 546R [8]. The key requirements for the repair include

- The concrete substrate must be clean, dry and sound. Prepare the concrete surface profile to achieve CSP 5per ICRI Guideline No. 03732 [6]. Wet surfaces may be dried with artificial heat or dehumidifier.

- Completely remove all substances detrimental to bonding, such as dirt, chemical contaminants, and weak, loose, or unsound concrete.

- Patch perimeter should be sawcut to a depth of 0.5 inch or more, as patch repair materials cannot be feather-edged.

- Conduct bond tests with the patch repair to ensure proper surface preparation and adequate bond strength. Adhesion tests should exhibit failure in the concrete, not at the interface. The bond strength must be greater than 200 psi.

- The selection and application of the repair materials are to follow the guidelines in ACI E706 [9] and the material manufacturer's recommendations.

3.6 Recommended Repair Plan

This investigation concludes that no single repair measure can adequately address all of the critical issues in this repair project. The best strategy is to implement a combination of repair measures, including crack repair with epoxy injection, external post-tensioning, structural strengthening with externally bonded CFRP, and patch repairs of spalls.

Appendix A provides a recommended repair plan based upon the crack condition survey data available to date. The repair of other areas may be developed using the same procedure. Specific procedures are summarized below.

1. *The keel slabs and bottom bolt beams at the end bays*: Repair the cracks as shown on the repair plan using epoxy injection in a dry condition; install the transverse post-tensioning; repair concrete spalls with patch repair; install a CFRP strengthening system over selected areas as shown on the plan in a dry condition.

2. *The top slabs and top bolt beams at the end bays*: Repair the cracks as shown on the repair plan using epoxy injection; install the transverse post-tensioning; and install a CFRP strengthening system over selected areas as shown on the plan.

3. *The end walls of Pontoon V, U. and T*: Repair the structural cracks as shown on the repair plan using epoxy injection in a dry environment. Monitor cracks on the end walls. If any new crack develops or old repaired crack re-opens, repair the crack with epoxy injection and then install an externally bonded CFRP system over the cracks on the interior surface of the pontoon's end bay.

4. *The end walls of Pontoon W:* Repair the structural cracks as shown on the repair plan using epoxy injection; and install a waterproofing membrane system over the entire area of the end walls. The waterproof membrane consists of 2 layers of uni-directional carbon FRP sheets, with uni-directional carbon fiber laying in orthogonal directions (i.e., in horizontal direction and in vertical direction).

5. *The middle part of Pontoon W where transverse post-tensioning was applied*: Repair the cracks as shown on the repair plan using epoxy injection in a dry condition; repair concrete spalls with patch repair; install a CFRP strengthening system over selected areas as shown on the plan in a dry condition.

4 Technical References

[1] C09 Committee, "Test Method for Splitting Tensile Strength of Cylindrical Concrete Specimens," ASTM International, 2011.

[2] ACI Committee 224.1R, *Causes, evaluation, and repair of cracks in concrete structures*. Farmington Hills, Mich.: American Concrete Institute, 2007.

[3] C09 Committee, "Specification for Epoxy-Resin-Base Bonding Systems for Concrete," ASTM International, 2010.

[4] ACI Committee 440.2R, *Guide for the design and construction of externally bonded FRP systems for strengthening concrete structures*. Farmington Hills, Mich.: American Concrete Institute, 2008.

[5] AASHTO, "Guide Specifications for Design of Bonded FRP Systems for Repair and Strengthening of Concrete Bridge Elements." 2012.

[6] International Concrete Repair Institute, *Guideline for Selecting and Specifying Concrete Surface Preparation for Sealers, Coatings, and Polymer Overlays*, 1997.

[7] A. Mirmiran, National Cooperative Highway Research Program, National Research Council (U.S.). Transportation Research Board, and American Association of State Highway and Transportation Officials, *Recommended construction specifications and process control manual for repair and retrofit of concrete structures using bonded FRP composites*. Washington, D.C.: Transportation Research Board, 2008.

[8] ACI Committee 546R, *Concrete repair guide*. Farmington Hills, Mich.: American Concrete Institute, 2004.

[9] ACI Committee E706, "Vertical and Overhead Spall repair by Hand Application." American Concrete Institute, 2005.

[10] ACI Committee 224R-01, *Control of Cracking in Concrete Structures*, American Concrete Institute, 2012.

[11] ASTM D7522, "Standard Test Method for Pull-Off Strength for FRP Bonded to Concrete Substrate", ASTM International, 2009

[12] ASTM D4541, "Standard Test Method for Pull-off Strength of Coating Using Portable Adhesive-Testers", ASTM International, 2009

[13] ASTM D3039, "Standard Test Method for Tensile Properties of Polymer Matrix Composite Materials", ASTM International, 2008

[14] ICC AC125, Acceptance Criteria for Concrete and Reinforced and Unreinforced Masonry Strengthening Using Externally Bonded Fiber Reinforced Polymer (FRP) Composite Systems, ICC-ES, 2010

5 Project Documents

/1/ Aberdeen Crack Mappings, 2012

/2/ Buckland & Taylor, 2012, "Response to KG Serial Letters and Buckland & Taylor LTD Independent Review"

/3/ Glosten Associates, 2010, "SR-520 Floating Bridge Replacement 21-Foot Truss Structure Wind and Wave Load Analysis"

/4/ Glosten Associates, 2010, "SR 520 Floating Bridge Replacement 21-Foot Truss Structure Ballasting Analysis".

/5/ KGM, 2012, "Cycle 2-6 Post-Tensioning Tendon Profiles"

/6/ KGM, 2012, "Pontoon 3A Repair Modifications"

/7/ KGM, 2012, "Type 1-1A and Type 3-3A Pontoon Drawings"

/8/ KGM, 2012, "Type 1-1A & 3A Repair"

/9/ KGM, 2012, "Tendon Profiles for Cycles 2-6"

/10/KPFF Consulting Engineers, 2012, "Floating Bridge Superstructure, Volume 5, East High Rise Design Properties"

/11/ KPFF Consulting Engineers, 2012, "Floating Bridge Superstructure, Volume 5, Low Rise Design Properties"

/12/ KPFF Consulting Engineers, 2012, "Floating Bridge Superstructure, Volume 5, West High Rise Design Properties"

/13/ KPFF Consulting Engineers, 2012, "Pontoon Column Connection Details"

/14/ KPFF Consulting Engineers, 2012, "Pontoon Column Foundation Plans"

/15/ KPFF Consulting Engineers, 2012, "Pontoon Re-Analysis Memo"

/16/ Overlay Crack Maps for Pontoons V and W (2012)

/17/ PSI Internal Crack Mappings for Pontoons V and W (2012)

/18/ State of Washington Department of Transportation (WSDOT) Structural Design Calculations:
Volume 6 - General/Common Pontoon Calculations
Volume 7 - Longitudinal Pontoon (Type I/IA) - Local Wall Design - Out of Plane - 1 of 2

Volume 8 - Longitudinal Pontoon (Type I/IA) - Local Wall Design - Out of Plane - 2 of 2
Volume 9 - Cross Pontoon (Type 3/3A) - Local Wall Design - Out of Plane - 1 of 3
Volume 10 - Cross Pontoon (Type 3/3A) - Local Wall Design - Out of Plane - 2 of 3
Volume 11 - Cross Pontoon (Type 3/3A) - Local Wall Design - Out of Plane - 3 of 3
Volume 17 - Local Allowable Elevated Structure Reactions and In Plane Wall Design
Volume 18 - Pontoon Global Capacities
Volume 19- Pontoon Joint Global Capacities
Volume 20 - Global Demand/Capacities Checks Including Allowable Bolt Tension - 1 of 3
Volume 21 - Global Demand/Capacities Checks Including Allowable Bolt Tension - 2 of 3
Volume 22 - Global Demand/Capacities Checks Including Allowable Bolt Tension - 3 of 3
Volume 24 - Bolt Beam & PT Tendon Anchorage Zones"

/19/ WSDOT Letter 0198 - Attachment 1 - LP3 Markup, 2012

/20/ WSDOT Letter 0198 - Attachment 2 - PT Tendon Profile Plan Sheets 1-14, 2012

/21/ WSDOT Letter 0198 - Attachment 3 -_Draft Plan Sheets EW1-EW4, 2012

/22/ WSDOT Letter 0198 - Rev M11 and PCP PT Plan Sheets, 2012

/23/ WSDOT, 2011, "Appendix M11- Conformed Combined Pontoon Minimum Technical Requirements"

/24/ WSDOT, 2011, "Appendix M22- Pontoon Minimum Technical Requirements"

/25/ WSDOT, 2011, "Appendix M23 - Outfitting and Assembly Min Tech Requirements"

/26/ WSDOT, "Appendix S02 - Design Criteria for Essential Bridges"

/27/ WSDOT, 2010, "Appendix S11- Criteria for bridges subjected to Light rail loading"

/28/ WSDOT, 2012, "Responses to KG Serial Letters and Buckland & Taylor LTD Independent Review"

6 Appendix A - Repair Plan

Table A-1 lists the repair measures and the FRP strengthening options, based on the condition survey. The features which require repair measure or FRP strengthening are illustrated in Figures A-1 to A-4. The numbering designation employed is similar to what is used in the condition survey notes, which are provided in a separate package.

The repair plan is based upon the crack condition survey available to date. The repair of other areas may be developed using the same procedure.

Table A-1 Pontoon V East End Wall and Keel Slab Crack Mapping

	Location Designation	Feature	Length (in.)	Max Width (in.)	Depth (in.)	Repair Measure	FRP Strengthening
Pontoon V - East Side Keel Slab	1.1	Form Joint				N/A	
	1.2	Patch				N/A	
	1.3	Extra Piece				N/A	
	1.4	Form Joint				N/A	
	1.5	Rough Area				N/A	
	1.6	Crack	50	0.004		Epoxy Injection or Sealant	N/A
	2.1	Crack	6	0.004		Epoxy Injection or Sealant	Y
	2.2	Crack	27	0.004		Epoxy Injection or Sealant	Y
	2.3	Crack	60	0.006		Epoxy Injection	Y
	2.4	Crack	25	0.006		Epoxy Injection	Y
	2.5	Crack	10	0.004		Epoxy Injection or Sealant	Y
	2.6	Crack	47	0.006		Epoxy Injection	Y
	2.7	Epoxy Repair				N/A	
	2.8	Crack	27	0.004		Epoxy Injection or Sealant	Y
	2.9	Crack	45	0.006		Epoxy Injection	Y
	2.10	Crack	4	0.004		Epoxy Injection or Sealant	Y
	2.11	Crack	50	0.006		Epoxy Injection	Y
	2.12	Crack	7	0.004		Epoxy Injection or Sealant	Y
	2.13	Crack	60	0.006		Epoxy Injection	Y
	2.14	Crack	63	0.006		Epoxy Injection	Y
	2.15	Rough Area				N/A	
	2.16	Extra Piece				N/A	
	3.1	Crack	17	0.004		Epoxy Injection or Sealant	Y
	3.2	Crack	60	0.006		Epoxy Injection	Y
	3.3	Crack	12	0.004		Epoxy Injection or Sealant	Y
	3.4	Crack	10	0.004		Epoxy Injection or Sealant	Y
	3.5	Crack	32	0.016		Epoxy Injection	Y
	3.6	Crack	60	0.009		Epoxy Injection	Y
	3.7	Crack	25	0.006		Epoxy Injection	Y
	3.8	Crack	28	0.004		Epoxy Injection or Sealant	Y
	3.9	Crack	47			Epoxy Injection	Y
	3.10	Epoxy Repair				N/A	
	3.11	Epoxy Repair				N/A	
	3.12	Crack	48	0.004		Epoxy Injection or Sealant	Y
	3.13	Rough Area				N/A	
	3.14	Crack	61	0.006		Epoxy Injection	Y
	3.15	Crack	50	0.006		Epoxy Injection	Y
	3.16	Rough Area				N/A	
	3.17	Crack	50	<0.004		N/A	Y
	3.18	Crack	24	<0.004		N/A	Y
	4.1	Crack	12	<0.004		N/A	Y
	4.2	Crack	60	0.006		Epoxy Injection	Y
	4.3	Crack	36	0.004		Epoxy Injection or Sealant	Y
	4.4	Crack	30	0.006		Epoxy Injection	Y
	4.5	Epoxy Repair				N/A	
	4.6	Crack	24	0.004		Epoxy Injection or Sealant	Y
	4.7	Crack	30	0.006		Epoxy Injection	Y
	4.8	Crack	60	0.01		Epoxy Injection	Y
	4.9	Epoxy Repair				N/A	
	4.10	Crack	30	0.004		Epoxy Injection or Sealant	Y
	4.11	Crack	36	0.004		Epoxy Injection or Sealant	Y
	4.12	Crack	54	0.004		Epoxy Injection or Sealant	Y
	4.13	Crack	50	0.006		Epoxy Injection	Y
	4.14	Rough Area				N/A	
	4.15	Crack	48	0.004		Epoxy Injection or Sealant	N/A
	4.16	Rough Area				N/A	
	4.17	Large Spall (exposed rebar)	34	18	4	Patch (Polymer Modified Concrete)	Y
	4.18	Honeycombing	60	60		Patch (Polymer Modified Concrete)	Y
	5.1	Crack	26	<0.004		N/A	Y
	5.2	Crack	78	0.004		Epoxy Injection or Sealant	Y
	8.1	Bugholes				N/A	

Contract No.: 0080066
Change Order No.: 108
Page 92 of 105

	8.2	Bugholes				N/A	
	9.1	Extra Piece				N/A	
	10.1	Small Spall	2.5	1.5	0.25	N/A	N/A
	12.1	Uneven Surface (Imperfection)	2	1		N/A	
	13.1	Uneven Surface (Imperfection)	1	1		N/A	
	14.1	Form Joint	36			N/A	
	15.1	Extra Piece				N/A	
	15.2	Small Spall	1	1	<0.25	N/A	
Pontoon V - West Side Keel Slab	1.1	Extra Piece				N/A	
	1.2	Rough Area			0.125	N/A	
	1.3	Crack	61	<0.004		N/A	Y
	1.4	Extra Piece			0.5	N/A	
	1.5	Crack	60	0.004		Epoxy Injection or Sealant	Y
	1.6	Honeycombing	48	12	0.1875	N/A	
	1.7	Extra Piece	19			N/A	
	1.8	Rough Area				N/A	
	1.9	Extra Piece				N/A	
	2.1	Crack	60	0.01		Epoxy Injection	Y
	2.2	Crack	61	0.006		Epoxy Injection	Y
	2.3	Crack	1	0.02		Epoxy Injection	Y
	2.4	Crack	18	0.006		Epoxy Injection	Y
	2.5	Crack	60	0.016		Epoxy Injection	Y
	2.6	Extra Piece				N/A	
	2.7	Crack	60	0.006		Epoxy Injection	Y
	2.8	Crack	60	0.006		Epoxy Injection	Y
	2.9	Crack	24	0.006		Epoxy Injection	Y
	2.10	Extra Piece				N/A	
	2.11	Crack	61	0.009		Epoxy Injection	Y
	2.12	Crack	48	0.006		Epoxy Injection	Y
	2.13	Rough Area				N/A	
	2.14	Crack	18	0.004		Epoxy Injection or Sealant	N/A
	2.15	Small Spall	9	6	0.5	Patch (Polymer Modified Concrete)	Y
	3.1	Crack	40	0.006		Epoxy Injection	Y
	3.2	Extra Piece				N/A	
	3.3	Crack	24	0.01		Epoxy Injection	Y
	3.4	Crack	42	0.006		Epoxy Injection	Y
	3.5	Crack	60	0.016		Epoxy Injection	Y
	3.6	Crack	48	0.009		Epoxy Injection	Y
	3.7	Crack	30	0.006		Epoxy Injection	Y
	3.8	Extra Piece				N/A	
	3.9	Crack	60	0.007		Epoxy Injection	Y
	3.10	Extra Piece				N/A	
	3.11	Crack	48	0.006		Epoxy Injection	Y
	3.12	Crack	18	0.006		Epoxy Injection	Y
	3.13	Crack	30	0.006		Epoxy Injection	Y
	3.14	Crack	48	0.004		Epoxy Injection or Sealant	Y
	3.15	Crack	30	0.01		Epoxy Injection	Y
	3.16	Crack	24	0.007		Epoxy Injection	Y
	3.17	Crack	60	0.012		Epoxy Injection	Y
	3.18	Crack	36	0.004		Epoxy Injection or Sealant	Y
	3.19	Epoxy Repair				N/A	
	3.20	Crack	72	0.004		Epoxy Injection or Sealant	Y
	3.21	Crack	42	0.004		Epoxy Injection or Sealant	Y
	3.22	Crack	18	0.004		Epoxy Injection or Sealant	Y
	3.23	Rough Area				N/A	
	3.24	Crack	48	0.004		Epoxy Injection or Sealant	Y
	3.25	Extra Piece				N/A	
	3.26	Extra Piece				N/A	
	4.1	Extra Piece				N/A	
	4.2	Extra Piece				N/A	
	4.3	Crack	68	0.009		Epoxy Injection	Y
	4.4	Crack	48	0.009		Epoxy Injection	Y
	4.5	Crack	60	0.006		Epoxy Injection	Y
	4.6	Crack	60	0.012		Epoxy Injection	Y
	4.7	Crack	30	0.004		Epoxy Injection or Sealant	Y
	4.8	Crack	24	0.004		Epoxy Injection or Sealant	Y
	4.9	Rough Area				N/A	

Contract No.: 008066
Change Order No.: 108
Page 93 of 105

	4.10	Crack	60	0.006		Epoxy Injection	Y
	4.11	Crack	18	0.006		Epoxy Injection	Y
	4.12	Rough Area				N/A	
	4.13	Small Spall	9	6.5	0.5	Patch (Polymer Modified Concrete)	Y
	5.1	Crack	30	0.004		Epoxy Injection or Sealant	Y
	5.2	Crack	60	0.004		Epoxy Injection or Sealant	Y
	5.3	Form Joint				N/A	
	6.1	Extra Piece				N/A	
	6.2	Small Spall	15	8	0.25	N/A	
	6.3	Extra Piece				N/A	
	7.1	Indent	9	6.25	0.5	N/A	N/A
	7.2	Extra Piece				N/A	
	7.3	Extra Piece				N/A	
	8.1	Extra Piece				N/A	
	8.2	Extra Piece				N/A	
	8.3	Epoxy Repair	1	1		N/A	
	8.4	Indent	7		0.75	N/A	N/A
	8.5	Extra Piece				N/A	
	9.1	Indent	9	6.625	0.375	N/A	N/A
	9.2	Extra Piece				N/A	
	10.1	Epoxy Repair				N/A	
	11.5	Extra Piece				N/A	
	11.6	Extra Piece				N/A	
	11.7	Extra Piece				N/A	
	12.4	Extra Piece				N/A	
	13.6	Extra Piece				N/A	
	13.7	Extra Piece				N/A	
	14.3	Extra Piece				N/A	
	14.4	Extra Piece				N/A	
Pontoon W - South Keel Slab	1.1	Epoxy Repair				N/A	
	2.1	Crack	10	0.02		Epoxy Injection	Y
	2.2	Crack	32	0.008		Epoxy Injection	Y
	2.3	Crack	32	0.008		Epoxy Injection	Y
	2.4	Crack	60	0.016		Epoxy Injection	Y
	2.5	Crack	60	0.012		Epoxy Injection	Y
	2.6	Crack	60	0.03		Epoxy Injection	Y
	2.7	Crack	60	0.08		Epoxy Injection	Y
	2.8	Crack	60	0.02		Epoxy Injection	Y
	2.9	Crack	60	0.02		Epoxy Injection	Y
	2.10	Crack	14	0.03		Epoxy Injection	Y
	3.1	Large Spall	26		2	Patch (Polymer Modified Concrete)	Y
	4.1	Crack	60	0.025		Epoxy Injection	Y
	4.2	Crack	60	0.02		Epoxy Injection	Y
	4.3	Crack	60	0.02		Epoxy Injection	Y
	4.4	Crack	70	0.02		Epoxy Injection	Y
	4.5	Crack	70	0.02		Epoxy Injection	Y
	4.6	Epoxy Repair	48	0.012		N/A	
	4.7	Crack	44	0.02		Epoxy Injection	Y
	4.8	Crack	65	0.016		Epoxy Injection	Y
	4.9	Crack	44	0.009		Epoxy Injection	Y
	4.10	Crack	16	0.009		Epoxy Injection	Y
	4.11	Crack	12	0.012		Epoxy Injection	Y
	6.1	Epoxy Repair	5			N/A	
	6.2	Crack	24	0.012		Epoxy Injection	N/A
	6.3	Crack	25	0.016		Epoxy Injection	N/A
	8.1	Extra Piece				N/A	
	8.2	Extra Piece				N/A	
	13.1	Exposed Rebar	20			N/A	
Pontoon W - Middle Section Keel Slab	1.1	Extra Piece				N/A	
	2.1	Bugholes	7	4.5	0.25	N/A	
	2.2	Uneven Surface (Imperfection)			0.5	N/A	
	3.1	Uneven Surface (Imperfection)				N/A	
	3.2	Extra Piece				N/A	
	5.1	Uneven Surface (Imperfection)	9	2		N/A	
	5.2	Epoxy Repair	7			N/A	
	5.3	Crack	13.5	0.016		Epoxy Injection	Y

Contract No.: 0080066
Change Order No.: 108
Page 94 of 105

	5.4	Crack	16	0.012		Epoxy Injection	Y
	5.5	Crack	6	0.009		Epoxy Injection	Y
	6.1	Uneven Surface (Imperfection)	36			N/A	N/A
	6.2	Uneven Surface (Imperfection)	6		0.5	N/A	N/A
	6.3	Large Spall	39		0.75	Patch (Polymer Modified Concrete)	N/A
	6.4	Uneven Surface (Imperfection)				N/A	
	6.5	Small Spall	42	1.75	0.5	N/A	
	7.1	Honeycombing	4.5	2.5	0.25	N/A	
	7.2	Extra Piece				N/A	
	7.3	Extra Piece				N/A	
	7.4	Small Spall	5.5	1.75	0.75	N/A	N/A
	10.1	Crack	24	0.01		Epoxy Injection	Y
	10.2	Crack	10	0.016		Epoxy Injection	N/A
	11.1	Small Spall	3	2.5	0.25	N/A	
	11.2	Large Spall	25	15.5	0.75	Patch (Polymer Modified Concrete)	Y
	11.3	Large Spall	24	15	0.75	Patch (Polymer Modified Concrete)	Y
	11.4	Small Spall	3.5	2	0.5	Patch (Polymer Modified Concrete)	Y
	11.5	Crack	26	0.01		Epoxy Injection	Y
	11.6	Large Spall	16	3.5	0.5	Patch (Polymer Modified Concrete)	Y
	16.1	Large Spall	60	28.5	2	Patch (Polymer Modified Concrete)	Y
	16.2	Small Spall	24		1	Patch (Polymer Modified Concrete)	Y
	19.1	Extra Piece				N/A	
	20.1	Large Spall	45	14	1	Patch (Polymer Modified Concrete)	Y
Pontoon W - North Section Keel Slab	1.1	Small Spall	5	1	<0.25	N/A	
	1.2	Crack	54	0.016		Epoxy Injection	Y
	1.3	Crack	10	0.012		Epoxy Injection	Y
	2.1	Bugholes	2.5	2		N/A	
	3.1	Honeycombing	5.5	5	0.25	N/A	
	3.2	Small Spall	5		1	Patch (Polymer Modified Concrete)	Y
	4.1	Crack	31	0.016		Epoxy Injection	Y
	4.2	Crack	60	0.03		Epoxy Injection	Y
	4.3	Crack	30	0.012		Epoxy Injection	Y
	4.4	Crack	12	0.009	1	Epoxy Injection	Y
	4.5	Small Spall	2	2		N/A	
	5.1	Crack	6	0.01		Epoxy Injection	N/A
	6.1	Small Spall	4	3	0.25	N/A	
	7.1	Epoxy Repair	65			N/A	
	8.1	Uneven Surface (Imperfection)				N/A	
	9.1	Small Spall			0.375	N/A	
	10.1	Small Spall	3.5	1.5	0.25	N/A	
	10.2	Crack	16	0.006		Epoxy Injection	N/A
	14.1	Small Spall	0.75	0.75	0.375	N/A	
Pontoon V - West Side Top Deck	1.5	Crack	60	0.005		Epoxy Injection or Sealant	N/A
	1.7	Crack	24	0.009		Epoxy Injection	N/A
	1.9	Crack	36	0.004		Epoxy Injection or Sealant	N/A
	1.11	Crack	12	0.004		Epoxy Injection or Sealant	N/A
	1.13	Crack	60	0.004		Epoxy Injection or Sealant	N/A
	1.14	Crack	36	0.004		Epoxy Injection or Sealant	N/A
	1.15	Crack	156	0.004		Epoxy Injection or Sealant	N/A
	1.16	Crack	60	0.004		Epoxy Injection or Sealant	N/A
	1.17	Crack	60	0.004		Epoxy Injection or Sealant	N/A
	1.18	Crack	192	0.004		Epoxy Injection or Sealant	N/A
	1.19	Crack	12	0.004		Epoxy Injection or Sealant	N/A
	1.20	Crack	12	0.004		Epoxy Injection or Sealant	N/A
	1.21	Crack	12	0.004		Epoxy Injection or Sealant	N/A
	2.11	Crack	12	0.004		Epoxy Injection or Sealant	N/A
	2.12	Crack	24	0.004		Epoxy Injection or Sealant	N/A
	2.16	Crack	36	0.004		Epoxy Injection or Sealant	N/A
	2.17	Crack	60	0.004		Epoxy Injection or Sealant	N/A
	2.18	Crack	36	0.004		Epoxy Injection or Sealant	N/A
	2.19	Crack	168	0.004		Epoxy Injection or Sealant	N/A

Contract No.: 00806
Change Order No.: 108
Page 95 of 105

	2.20	Crack	60	0.004		Epoxy Injection or Sealant	N/A
	2.21	Crack	48	0.004		Epoxy Injection or Sealant	N/A
	2.22	Crack	24	0.004		Epoxy Injection or Sealant	N/A
	2.23	Crack	48	0.004		Epoxy Injection or Sealant	N/A
	2.24	Crack	36	0.004		Epoxy Injection or Sealant	N/A
	2.25	Crack	36	0.004		Epoxy Injection or Sealant	N/A
	2.27	Crack	36	0.004		Epoxy Injection or Sealant	N/A
	3.1	Crack	24	0.004		Epoxy Injection or Sealant	N/A
	3.2	Crack	30	0.004		Epoxy Injection or Sealant	N/A
	3.8	Crack	12	0.004		Epoxy Injection or Sealant	N/A
	3.9	Crack	48	0.004		Epoxy Injection or Sealant	N/A
	3.10	Crack	36	0.004		Epoxy Injection or Sealant	N/A
	3.11	Crack	12	0.004		Epoxy Injection or Sealant	N/A
	3.12	Crack	12	0.004		Epoxy Injection or Sealant	N/A
	3.13	Crack	12	0.004		Epoxy Injection or Sealant	N/A
	4.3	Crack	24	0.006		Epoxy Injection	N/A
	4.4	Crack	24	0.004		Epoxy Injection or Sealant	N/A
	4.5	Crack	60	0.004		Epoxy Injection or Sealant	N/A
	4.6	Crack	60	0.004		Epoxy Injection or Sealant	N/A
	4.7	Crack	36	0.004		Epoxy Injection or Sealant	N/A
	4.8	Crack	96	0.004		Epoxy Injection or Sealant	N/A
	4.9	Crack	12	0.004		Epoxy Injection or Sealant	N/A
	4.10	Crack	48	0.006		Epoxy Injection	N/A
	5.6	Crack	48	0.004		Epoxy Injection or Sealant	N/A
	5.7	Crack	36	0.004		Epoxy Injection or Sealant	N/A
	5.11	Crack	36	0.004		Epoxy Injection or Sealant	N/A
	5.12	Crack	24	0.004		Epoxy Injection or Sealant	N/A
	5.13	Crack	12	0.004		Epoxy Injection or Sealant	N/A
	6.1	Crack	240	0.004		Epoxy Injection or Sealant	N/A
	6.2	Crack	48	0.004		Epoxy Injection or Sealant	N/A
	6.3	Crack	72	0.004		Epoxy Injection or Sealant	N/A
	6.4	Crack	24	0.004		Epoxy Injection or Sealant	N/A
	6.5	Crack	12	0.004		Epoxy Injection or Sealant	N/A
	6.6	Crack	60	0.004		Epoxy Injection or Sealant	N/A
	7.1	Crack	240	0.004		Epoxy Injection or Sealant	N/A
	7.2	Crack	72	0.004		Epoxy Injection or Sealant	N/A
	7.3	Crack	24	0.004		Epoxy Injection or Sealant	N/A
	8.1	Crack	12	0.004		Epoxy Injection or Sealant	N/A
	8.2	Crack	12	0.004		Epoxy Injection or Sealant	N/A
	8.3	Crack	12	0.004		Epoxy Injection or Sealant	N/A
	9.1	Crack	36	0.004		Epoxy Injection or Sealant	N/A
	9.2	Crack	60	0.004		Epoxy Injection or Sealant	N/A
	9.3	Crack	72	0.004		Epoxy Injection or Sealant	N/A
	10.2	Crack	120	0.004		Epoxy Injection or Sealant	N/A
	10.3	Crack	12	0.004		Epoxy Injection or Sealant	N/A
	10.4	Crack	12	0.004		Epoxy Injection or Sealant	N/A
	10.5	Crack	48	0.004		Epoxy Injection or Sealant	N/A
	10.6	Crack	24	0.004		Epoxy Injection or Sealant	N/A
Pontoon V - East Side Top Deck	1.1	Crack	108	0.004		Epoxy Injection or Sealant	N/A
	1.3	Crack	12	0.004		Epoxy Injection or Sealant	N/A
	1.5	Crack	36	0.004		Epoxy Injection or Sealant	N/A
	3.2	Crack	36	0.004		Epoxy Injection or Sealant	N/A
	3.6	Crack	24	0.004		Epoxy Injection or Sealant	N/A
	3.7	Crack	24	0.004		Epoxy Injection or Sealant	N/A
	3.8	Crack	60	0.004		Epoxy Injection or Sealant	N/A
	3.9	Crack	12	0.004		Epoxy Injection or Sealant	N/A
	3.10	Crack	24	0.004		Epoxy Injection or Sealant	N/A
	3.14	Crack	24	0.004		Epoxy Injection or Sealant	N/A
	3.16	Crack	24	0.004		Epoxy Injection or Sealant	N/A
	3.17	Crack	24	0.004		Epoxy Injection or Sealant	N/A
	3.18	Crack	36	0.004		Epoxy Injection or Sealant	N/A
	3.24	Crack	6	0.004		Epoxy Injection or Sealant	N/A
	3.25	Crack	6	0.004		Epoxy Injection or Sealant	N/A
	3.36	Crack	12	0.004		Epoxy Injection or Sealant	N/A
	4.1	Crack	12	0.004		Epoxy Injection or Sealant	N/A
	4.2	Crack	24	0.004		Epoxy Injection or Sealant	N/A
	4.3	Crack	12	0.004		Epoxy Injection or Sealant	N/A
	4.5	Crack	36	0.004		Epoxy Injection or Sealant	N/A

Contract No.: 008066
Change Order No.: 108
Page 96 of 105

	4.6	Crack	24	0.004		Epoxy Injection or Sealant	N/A
	4.7	Crack	24	0.004		Epoxy Injection or Sealant	N/A
	4.8	Crack	144	0.004		Epoxy Injection or Sealant	N/A
	4.9	Crack	72	0.004		Epoxy Injection or Sealant	N/A
	4.14	Crack	12	0.004		Epoxy Injection or Sealant	N/A
	5.1	Crack	72	0.004		Epoxy Injection or Sealant	N/A
	5.2	Crack	48	0.004		Epoxy Injection or Sealant	N/A
	5.3	Crack	12	0.004		Epoxy Injection or Sealant	N/A
	5.4	Crack	30	0.004		Epoxy Injection or Sealant	N/A
	5.5	Crack	36	0.004		Epoxy Injection or Sealant	N/A
	5.8	Crack	12	0.004		Epoxy Injection or Sealant	N/A
	8.3	Crack	6	0.004		Epoxy Injection or Sealant	N/A
V - NE Above	1.1	Crack	144	0.004		Epoxy Injection or Sealant	N/A
	1.2	Crack	6	0.004		Epoxy Injection or Sealant	N/A
	2.1	Crack	24	0.004		Epoxy Injection or Sealant	N/A
V - SE Above	1.1	Crack	96	0.004		Epoxy Injection or Sealant	N/A
	1.2	Crack	6	0.004		Epoxy Injection or Sealant	N/A
V - NW Above	1.1	Crack	60	0.012		Epoxy Injection	N/A
	1.2	Crack	8	0.004		Epoxy Injection or Sealant	N/A
V - SW Above	1.2	Crack	30	0.02		Epoxy Injection	N/A
	1.3	Crack	8	0.004		Epoxy Injection or Sealant	N/A
	2.1	Crack	36	0.004		Epoxy Injection or Sealant	N/A
	2.2	Crack	12	0.004		Epoxy Injection or Sealant	N/A
	2.3	Crack	6	0.004		Epoxy Injection or Sealant	N/A
V - West Side Above	2.1	Crack	3	0.004		Epoxy Injection or Sealant	N/A
	2.2	Crack	3	0.004		Epoxy Injection or Sealant	N/A
	2.3	Crack	12	0.004		Epoxy Injection or Sealant	N/A
	2.4	Crack	12	0.004		Epoxy Injection or Sealant	N/A
	2.5	Crack	12	0.004		Epoxy Injection or Sealant	N/A
Pontoon V - East Side End Wall Above Water	2.1	Crack	30	0.004		Epoxy Injection or Sealant	N/A
	2.2	Crack	66	0.004		Epoxy Injection or Sealant	N/A
	2.3	Crack	24	0.004		Epoxy Injection or Sealant	N/A
	2.4	Crack	36	0.004		Epoxy Injection or Sealant	N/A
	2.5	Crack	168	0.004		Epoxy Injection or Sealant	N/A
	2.6	Crack	24	0.004		Epoxy Injection or Sealant	N/A
	2.7	Crack	18	0.004		Epoxy Injection or Sealant	N/A
	2.8	Crack	12	0.004		Epoxy Injection or Sealant	N/A
	2.9	Crack	36	0.004		Epoxy Injection or Sealant	N/A
	2.10	Crack	36	0.004		Epoxy Injection or Sealant	N/A
	2.11	Crack	18	0.004		Epoxy Injection or Sealant	N/A
	2.12	Crack	36	0.004		Epoxy Injection or Sealant	N/A
	2.13	Crack	36	0.004		Epoxy Injection or Sealant	N/A
	2.14	Crack	24	0.004		Epoxy Injection or Sealant	N/A
	3.1	Crack	168	0.004		Epoxy Injection or Sealant	N/A
	3.2	Crack	12	0.004		Epoxy Injection or Sealant	N/A
	3.3	Crack	12	0.004		Epoxy Injection or Sealant	N/A
	3.4	Crack	18	0.004		Epoxy Injection or Sealant	N/A
	3.5	Crack	18	0.004		Epoxy Injection or Sealant	N/A
	3.6	Crack	12	0.004		Epoxy Injection or Sealant	N/A
	3.7	Crack	18	0.004		Epoxy Injection or Sealant	N/A
	3.8	Crack	36	0.004		Epoxy Injection or Sealant	N/A
	3.9	Crack	24	0.004		Epoxy Injection or Sealant	N/A
	3.10	Crack	54	0.004		Epoxy Injection or Sealant	N/A
	3.11	Crack	36	0.004		Epoxy Injection or Sealant	N/A
	3.12	Crack	168	0.004		Epoxy Injection or Sealant	N/A
	3.13	Crack	18	0.004		Epoxy Injection or Sealant	N/A
	3.14	Crack	24	0.004		Epoxy Injection or Sealant	N/A
	3.15	Crack	12	0.004		Epoxy Injection or Sealant	N/A
	4.1	Crack	168	0.004		Epoxy Injection or Sealant	N/A
	4.2	Crack	72	0.004		Epoxy Injection or Sealant	N/A
	4.3	Crack	30	0.004		Epoxy Injection or Sealant	N/A
	4.4	Crack	12	0.004		Epoxy Injection or Sealant	N/A
	4.5	Crack	132	0.004		Epoxy Injection or Sealant	N/A
	4.6	Crack	12	0.004		Epoxy Injection or Sealant	N/A

Contract No.: 0080066
Change Order No.: 108
Page 97 of 105

Pontoon V - East Side End Wall Below Water	4.7	Crack	18	0.004		Epoxy Injection or Sealant	N/A
	1.2	Crack	86	0.007		Epoxy Injection	N/A
	1.3	Crack	17	0.004		Epoxy Injection or Sealant	N/A
	1.4	Crack	56	0.006		Epoxy Injection	N/A
	1.5	Crack	18	0.006		Epoxy Injection	N/A
	2.1	Crack	24	0.004		Epoxy Injection or Sealant	N/A
	3.1	Crack	10	0.004		Epoxy Injection or Sealant	N/A
	3.2	Crack	36	0.006		Epoxy Injection	N/A
	3.3	Crack	24	0.006		Epoxy Injection	N/A
	3.4	Crack	14	0.004		Epoxy Injection or Sealant	N/A
	3.5	Crack	12	0.004		Epoxy Injection or Sealant	N/A
	3.6	Crack	25	0.009		Epoxy Injection	N/A
	3.7	Crack	3	0.009		Epoxy Injection	N/A
	3.9	Crack	10	<0.004		N/A	N/A
	3.10	Crack	33	0.006		Epoxy Injection	N/A
	3.11	Crack	23	0.004		Epoxy Injection or Sealant	N/A
	3.12	Crack	16	0.004		Epoxy Injection or Sealant	N/A
	3.13	Crack	33	0.004		Epoxy Injection or Sealant	N/A
	3.14	Crack	48	0.004		Epoxy Injection or Sealant	N/A
	3.15	Crack	56	0.006		Epoxy Injection	N/A
	3.16	Crack	30	0.006		Epoxy Injection	N/A
	3.17	Crack	36	0.006		Epoxy Injection	N/A
	3.18	Crack	48	0.006		Epoxy Injection	N/A
	3.19	Crack	36	0.006		Epoxy Injection	N/A
	3.20	Crack	53	0.006		Epoxy Injection	N/A
	3.21	Crack	16	0.006		Epoxy Injection	N/A
	4.1	Crack	4	0.006		Epoxy Injection	N/A
	4.2	Crack	60	0.006		Epoxy Injection	N/A
	4.3	Crack	48	0.004		Epoxy Injection or Sealant	N/A
	4.4	Crack	16	0.004		Epoxy Injection or Sealant	N/A
	4.6	Crack	60	0.004		Epoxy Injection or Sealant	N/A
	5.3	Crack	14	0.004		Epoxy Injection or Sealant	N/A
	5.4	Crack	5	0.004		Epoxy Injection or Sealant	N/A
	5.5	Crack	3.5	0.004		Epoxy Injection or Sealant	N/A
	5.6	Crack	4	0.006		Epoxy Injection	N/A
	5.7	Crack	14.5	0.004		Epoxy Injection or Sealant	N/A
	5.9	Crack	6	0.012		Epoxy Injection	N/A
	5.11	Crack	15	0.004		Epoxy Injection or Sealant	N/A
	5.12	Crack	17	0.004		Epoxy Injection or Sealant	N/A
	5.13	Crack	4	0.004		Epoxy Injection or Sealant	N/A
	5.14	Crack	4	0.004		Epoxy Injection or Sealant	N/A
	5.16	Crack	4	0.009		Epoxy Injection	N/A
	5.17	Crack	36	0.004		Epoxy Injection or Sealant	N/A
	5.19	Crack	70	0.004		Epoxy Injection or Sealant	N/A
	5.20	Crack	12	0.004		Epoxy Injection or Sealant	N/A
	5.21	Crack	45	0.004		Epoxy Injection or Sealant	N/A
	5.22	Crack	29	0.004		Epoxy Injection or Sealant	N/A
	5.23	Crack	12	0.004		Epoxy Injection or Sealant	N/A
	5.24	Crack	5	0.004		Epoxy Injection or Sealant	N/A
	5.25	Crack	5	0.004		Epoxy Injection or Sealant	N/A
	5.26	Crack	2	0.006		Epoxy Injection	N/A
	5.27	Crack	18	0.006		Epoxy Injection	N/A
	5.28	Crack	14.5	0.004		Epoxy Injection or Sealant	N/A
	6.1	Crack	4	0.004		Epoxy Injection or Sealant	N/A
	6.2	Crack	82	0.004		Epoxy Injection or Sealant	N/A
	6.3	Crack	18	0.006		Epoxy Injection	N/A
	6.4	Crack	3	0.006		Epoxy Injection	N/A
	6.5	Crack	16	0.004		Epoxy Injection or Sealant	N/A
	6.6	Crack	7	0.006		Epoxy Injection	N/A
	6.7	Crack	18	0.004		Epoxy Injection or Sealant	N/A
	7.1	Crack	35	0.006		Epoxy Injection	N/A
	7.3	Crack	2	0.075		Epoxy Injection	N/A
	7.4	Crack	11	0.004		Epoxy Injection or Sealant	N/A
	7.5	Crack	6.5	0.007		Epoxy Injection	N/A
	7.6	Crack	3.75	0.007		Epoxy Injection	N/A
	7.7	Crack	9.5	0.005		Epoxy Injection	N/A
	7.8	Crack	6.5	0.012		Epoxy Injection	N/A
	7.9	Crack	6.25	0.004		Epoxy Injection or Sealant	N/A

Contract No.: 00806
Change Order No.: 108
Page 98 of 105

	7.10	Crack	40	0.004		Epoxy Injection or Sealant	N/A
	7.11	Crack	9	<0.004		N/A	N/A
	7.12	Crack	38	0.004		Epoxy Injection or Sealant	N/A
	7.13	Crack	6	0.012		Epoxy Injection	N/A
	7.14	Crack	12	0.004		Epoxy Injection or Sealant	N/A
	7.15	Crack	23	0.004		Epoxy Injection or Sealant	N/A
	7.16	Crack	25	0.004		Epoxy Injection or Sealant	N/A
	7.17	Crack	40	0.006		Epoxy Injection	N/A
	7.18	Crack	3	0.006		Epoxy Injection	N/A
	7.19	Crack	9	0.006		Epoxy Injection	N/A
	7.20	Crack	15	0.009		Epoxy Injection	N/A
	7.21	Crack	21	0.004		Epoxy Injection or Sealant	N/A
	7.23	Crack	24	0.009		Epoxy Injection	N/A
	7.24	Crack	18	0.004		Epoxy Injection or Sealant	N/A
	8.1	Crack	5	0.004		Epoxy Injection or Sealant	N/A
	8.2	Crack	14	0.009		Epoxy Injection	N/A
	9.2	Crack	32	0.006		Epoxy Injection	N/A
	9.3	Crack	50	0.006		Epoxy Injection	N/A
	9.4	Crack	8	0.006		Epoxy Injection	N/A
	9.5	Crack	10	0.006		Epoxy Injection	N/A
	9.7	Crack	25	0.006		Epoxy Injection	N/A
	9.8	Crack	48	0.006		Epoxy Injection	N/A
V - W End Below	6.1	Crack	41	<0.004		N/A	N/A
	6.2	Crack	17	0.004		Epoxy Injection or Sealant	N/A
	7.1	Crack	17	0.004		Epoxy Injection or Sealant	N/A
	8.1	Crack	33.5	0.004		Epoxy Injection or Sealant	N/A
V - NW Below	10.3	Crack	27	0.004		Epoxy Injection or Sealant	N/A
	11.1	Crack	16	0.004		Epoxy Injection or Sealant	N/A
V - SW Below Water	2.1	Large Spall	24	4.5		Patch (Polymer Modified Concrete)	N/A
	2.5	Crack	6	0.004		Epoxy Injection or Sealant	N/A
	3.2	Crack	60	0.004		Epoxy Injection or Sealant	N/A
	3.3	Crack	29	0.004		Epoxy Injection or Sealant	N/A
	3.6	Crack	12	0.004		Epoxy Injection or Sealant	N/A
	3.7	Crack	5	0.004		Epoxy Injection or Sealant	N/A
Pontoon W - South Side End Wall Below Water	7.1	Small Spall	7	2	0.5	N/A	N/A
	7.2	Crack	15	0.006		Epoxy Injection	N/A
	7.3	Crack	23	0.01		Epoxy Injection	N/A
	8.1	Crack	14	0.009		Epoxy Injection	N/A
	8.2	Crack	8	0.01		Epoxy Injection	N/A
	8.3	Crack	16	0.006		Epoxy Injection	N/A
	8.4	Crack	8	0.006		Epoxy Injection	N/A
	8.5	Crack	12	0.006		Epoxy Injection	N/A
	8.6	Crack	12	0.01		Epoxy Injection	N/A
	8.7	Crack	26	0.012		Epoxy Injection	N/A
	8.8	Crack	13	0.012		Epoxy Injection	N/A
	8.9	Crack	24	0.004		Epoxy Injection or Sealant	N/A
	8.10	Crack	9.5	0.01		Epoxy Injection	N/A
	8.11	Crack	2	0.007		Epoxy Injection	N/A
	8.12	Crack	3	0.012		Epoxy Injection	N/A
	8.13	Crack	14	0.012		Epoxy Injection	N/A
	10.1	Crack	53	0.004		Epoxy Injection or Sealant	N/A
	10.2	Crack	5	0.004		Epoxy Injection or Sealant	N/A
	10.3	Crack	6	0.006		Epoxy Injection	N/A
	10.4	Crack	4	0.004		Epoxy Injection or Sealant	N/A
	11.1	Crack	7	0.02		Epoxy Injection	N/A
	11.3	Crack	7	0.01		Epoxy Injection	N/A
	13.1	Crack	2	0.009		Epoxy Injection	N/A
	13.2	Crack	2	0.012		Epoxy Injection	N/A
	13.3	Crack	13	0.01		Epoxy Injection	N/A
	13.4	Crack	18	0.125		Epoxy Injection	N/A
	13.5	Crack	15	0.02		Epoxy Injection	N/A
	13.6	Crack	8	0.004		Epoxy Injection or Sealant	N/A
	14.1	Crack	8	0.009		Epoxy Injection	N/A
	14.2	Crack	9	0.006		Epoxy Injection	N/A
	16.1	Crack	12	0.006		Epoxy Injection	N/A

Contract No.: 008066
Change Order No.: 108
Page 99 of 105

	16.2	Crack	7	0.004		Epoxy Injection or Sealant	N/A
	16.3	Crack	10	0.004		Epoxy Injection	N/A
	16.4	Crack	10	0.006		Epoxy Injection	N/A
	16.5	Crack	8	0.025		Epoxy Injection	N/A
W - SE Below Water	17.2	Crack	2	0.004		Epoxy Injection or Sealant	N/A
	17.5	Crack	5	0.006		Epoxy Injection	N/A
	17.6	Crack	4	0.006		Epoxy Injection	N/A
	17.7	Crack	5	0.006		Epoxy Injection	N/A
	19.1	Crack	5	0.007		Epoxy Injection	N/A
	19.2	Crack	8	0.006		Epoxy Injection	N/A
	19.3	Crack	7	0.02		Epoxy Injection	N/A
	19.4	Crack	7	0.04		Epoxy Injection	N/A
W - West Wall Middle Below Water	1.3	Crack	9.5	0.016		Epoxy Injection	N/A
	3.3	Crack	9	0.009		Epoxy Injection	N/A
	3.4	Crack	4	0.025		Epoxy Injection	N/A
	4.1	Crack	17	0.035		Epoxy Injection	N/A
	5.1	Crack	24	0.012		Epoxy Injection	N/A
	5.2	Crack	21	0.01		Epoxy Injection	N/A
	5.5	Crack	76	0.012		Epoxy Injection	N/A
	5.6	Crack	1	0.025		Epoxy Injection	N/A
	5.7	Large Spall	7	2	1	Patch (Polymer Modified Concrete)	N/A
	5.8	Crack	20	0.01		Epoxy Injection	N/A
	7.4	Crack	7	0.012		Epoxy Injection	N/A
	8.1	Crack	2	0.03		Epoxy Injection	N/A
	8.2	Crack	2	0.01		Epoxy Injection	N/A
	8.3	Crack	1	0.03		Epoxy Injection	N/A
W - East Wall Middle Below Water	3.1	Crack	7	0.006		Epoxy Injection	N/A
	3.2	Crack	7	0.01		Epoxy Injection	N/A
	3.3	Crack	11	0.03		Epoxy Injection	N/A
	3.5	Crack	10	0.025		Epoxy Injection	N/A
	5.1	Crack	18	0.004		Epoxy Injection or Sealant	N/A
	5.2	Crack	2	0.007		Epoxy Injection	N/A
	5.3	Crack	5	0.006		Epoxy Injection	N/A
	5.4	Crack	5	0.02		Epoxy Injection	N/A
	5.6	Crack	9	0.006		Epoxy Injection	N/A
	5.7	Crack	16	0.006		Epoxy Injection	N/A
	5.8	Crack	35	0.007		Epoxy Injection	N/A
	5.9	Crack	35	0.01		Epoxy Injection	N/A
	5.10	Crack	9	0.007		Epoxy Injection	N/A
	5.11	Crack	8	0.004		Epoxy Injection or Sealant	N/A
	6.1	Crack	4	0.01		Epoxy Injection	N/A
	7.1	Crack	20	0.006		Epoxy Injection	N/A
	7.2	Crack	2	0.006		Epoxy Injection	N/A
	8.1	Crack	8	0.006		Epoxy Injection	N/A
W - NE Below	1.1	Crack	4	0.006		Epoxy Injection	N/A
	1.2	Crack	4	0.006		Epoxy Injection	N/A
	2.1	Crack	13	0.004		Epoxy Injection or Sealant	N/A
	5.1	Small Spall	9	4	1.5	Patch (Polymer Modified Concrete)	N/A
	6.1	Crack	10	0.01		Epoxy Injection	N/A
W - NW Below	2.1	Crack	2.5	0.025		Epoxy Injection	N/A
	2.2	Crack	12.5	0.02		Epoxy Injection	N/A
Pontoon W - North Side End Wall Below Water	1.2	Crack	12	0.009		Epoxy Injection	N/A
	2.1	Crack	6	0.025		Epoxy Injection	N/A
	2.2	Crack	24	0.009		Epoxy Injection	N/A
	2.3	Crack	30	0.006		Epoxy Injection	N/A
	2.4	Crack	12	0.004		Epoxy Injection or Sealant	N/A
	2.5	Crack	18	0.006		Epoxy Injection	N/A
	3.1	Crack	16	0.006		Epoxy Injection	N/A
	3.2	Crack	11	0.006		Epoxy Injection	N/A
	3.3	Crack	30	0.004		Epoxy Injection or Sealant	N/A
	3.4	Crack	3	0.007		Epoxy Injection	N/A
	4.1	Crack	16	0.007		Epoxy Injection	N/A
	4.2	Crack	29	0.007		Epoxy Injection	N/A
	4.3	Crack	30	0.006		Epoxy Injection	N/A

	5.2	Large Spall	10	3	1.5	Patch (Polymer Modified Concrete)	N/A
	7.1	Crack	2	0.004		Epoxy Injection or Sealant	N/A
	7.2	Crack	3	0.004		Epoxy Injection or Sealant	N/A
	7.3	Crack	2	0.009		Epoxy Injection	N/A
	7.4	Crack	1	0.009		Epoxy Injection	N/A
	7.5	Crack	9	0.009		Epoxy Injection	N/A
	7.6	Crack	3	0.016		Epoxy Injection	N/A
	7.7	Small Spall	3	3	0.75	N/A	N/A
	7.8	Crack	12	0.006		Epoxy Injection	N/A
	8.1	Crack	16	0.009		Epoxy Injection	N/A
	8.2	Crack	35	0.01		Epoxy Injection	N/A
	9.1	Crack	48	0.006		Epoxy Injection	N/A
	10.1	Crack	19	0.009		Epoxy Injection	N/A
	10.2	Crack	11	0.012		Epoxy Injection	N/A
	10.3	Crack	47	0.02		Epoxy Injection	N/A
	10.4	Crack	19	0.009		Epoxy Injection	N/A
	10.5	Crack	14	0.006		Epoxy Injection	N/A
	10.6	Crack	50	0.012		Epoxy Injection	N/A
	10.7	Crack	9	0.004		Epoxy Injection or Sealant	N/A
	10.8	Crack	11	0.007		Epoxy Injection	N/A
	10.9	Crack	15	0.004		Epoxy Injection or Sealant	N/A
	10.10	Crack	7	0.01		Epoxy Injection	N/A
	10.11	Crack	16	0.025		Epoxy Injection	N/A
	10.12	Crack	5	0.006		Epoxy Injection	N/A
Pontoon V - West End Internal Cracks	5.47	Crack	1	0.004		Epoxy Injection or Sealant	N/A
	5.48	Crack	18	0.004		Epoxy Injection or Sealant	N/A
	3.48	Crack	12	0.004		Epoxy Injection or Sealant	N/A
	3.49	Crack	60	0.004		Epoxy Injection or Sealant	N/A
	1.1.47	Crack	30	0.004		Epoxy Injection or Sealant	N/A
	6.1	Crack	96	0.004		Epoxy Injection or Sealant	N/A
	6.2	Crack	36	0.004		Epoxy Injection or Sealant	N/A
	6.3	Crack	24	0.004		Epoxy Injection or Sealant	N/A
	6.4	Crack	42	0.004		Epoxy Injection or Sealant	N/A
	8.1	Crack	36	0.004		Epoxy Injection or Sealant	N/A
	8.2	Crack	36	0.004		Epoxy Injection or Sealant	N/A
Pontoon V - East End Internal Cracks	10.1.3	Crack	36	0.004		Epoxy Injection or Sealant	N/A
	10.1.36	Crack	24	0.004		Epoxy Injection or Sealant	N/A
	10.2.9	Crack	24	0.004		Epoxy Injection or Sealant	N/A
	10.2.10	Crack	48	0.004		Epoxy Injection or Sealant	N/A
	10.2.14	Crack	36	0.004		Epoxy Injection or Sealant	N/A
	7.40	Crack	60	0.004		Epoxy Injection or Sealant	N/A
	7.41	Crack	60	0.004		Epoxy Injection or Sealant	N/A
	7.42	Crack	48	0.004		Epoxy Injection or Sealant	N/A
	7.47	Crack	30	0.004		Epoxy Injection or Sealant	N/A
	7.48	Crack	30	0.004		Epoxy Injection or Sealant	N/A
	7.49	Crack	30	0.006		Epoxy Injection	N/A
	7.50	Crack	12	0.004		Epoxy Injection or Sealant	N/A
	7.51	Crack	36	0.004		Epoxy Injection or Sealant	N/A
	7.52	Crack	18	0.004		Epoxy Injection or Sealant	N/A
	4.39	Crack	24	0.004		Epoxy Injection or Sealant	N/A
	4.40	Crack	12	0.004		Epoxy Injection or Sealant	N/A
	4.42	Crack	36	0.004		Epoxy Injection or Sealant	N/A
	4.43	Crack	60	0.004		Epoxy Injection or Sealant	N/A
	4.44	Crack	24	0.004		Epoxy Injection or Sealant	N/A

Contract No.: 008066
Change Order No.: 108
Page 101 of 105

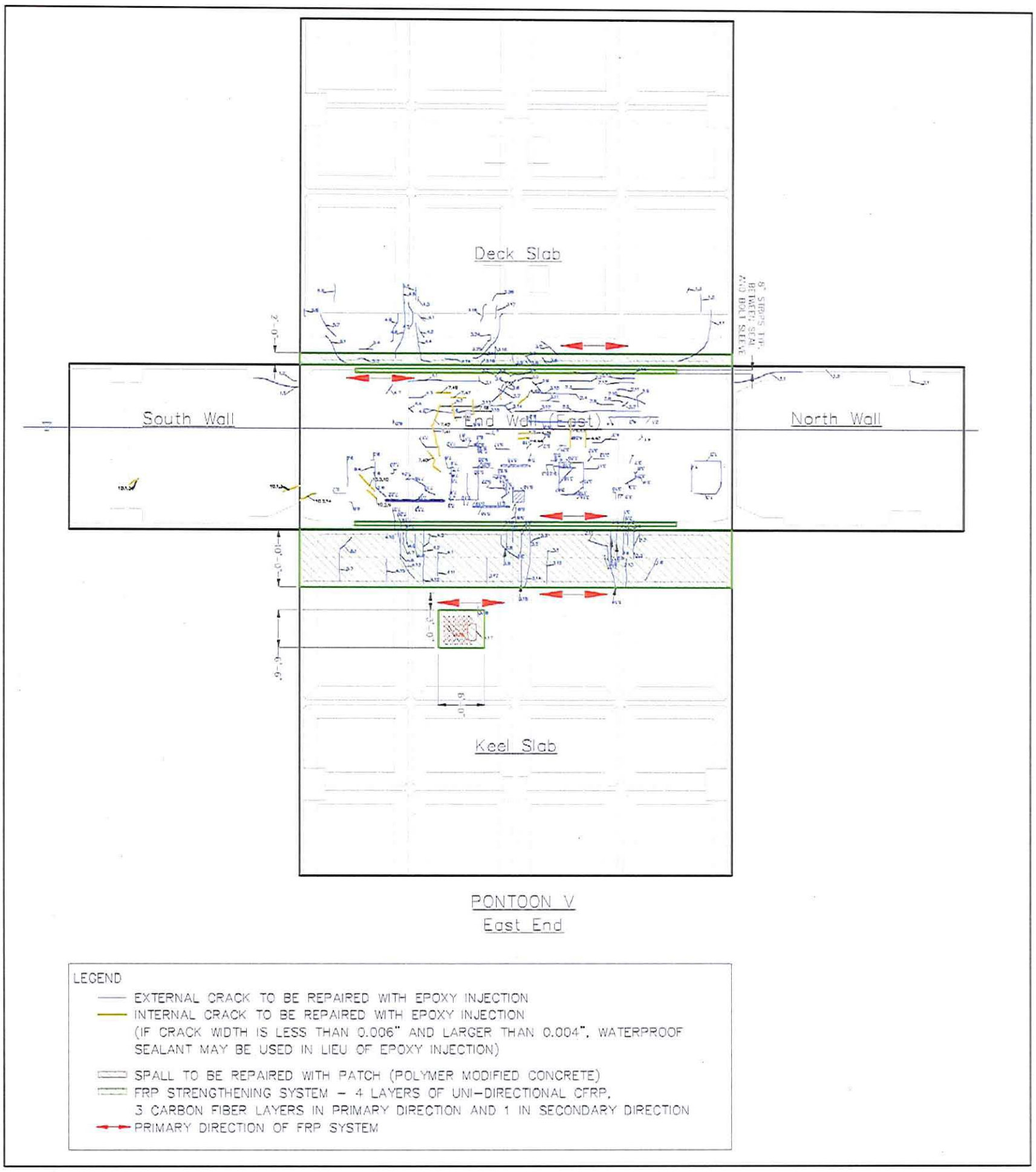

Figure A-1 Pontoon V East End External and Internal Repair Plan

Contract No.: 008066
Change Order No.: 108
Page 102 of 105

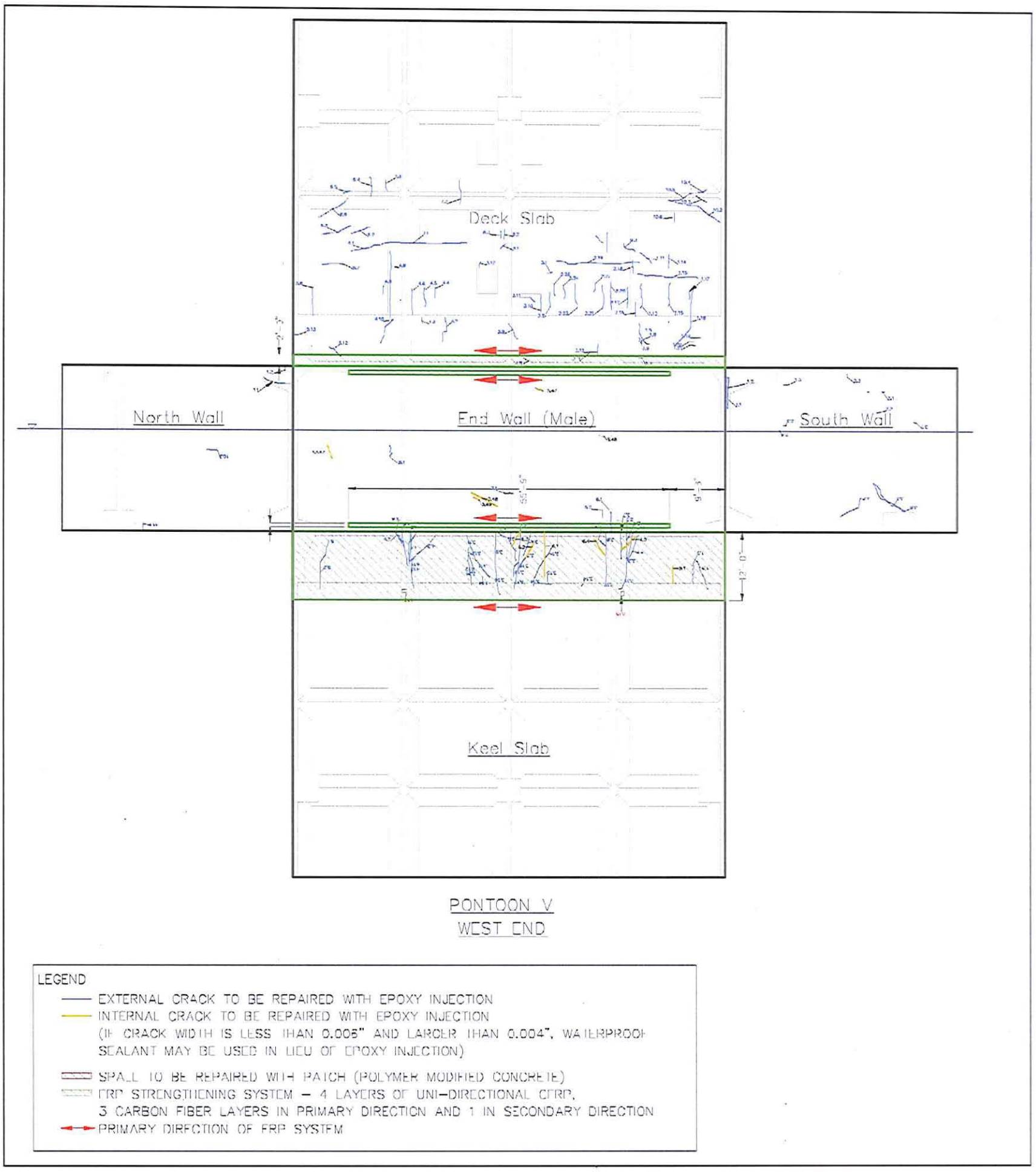

Figure A-2 Pontoon V West End External and Internal Repair Plan

Contract No.: 00801de
Change Order No.: 108
Page 103 of 105

Ben C. Gerwick, Inc.
a COWI company

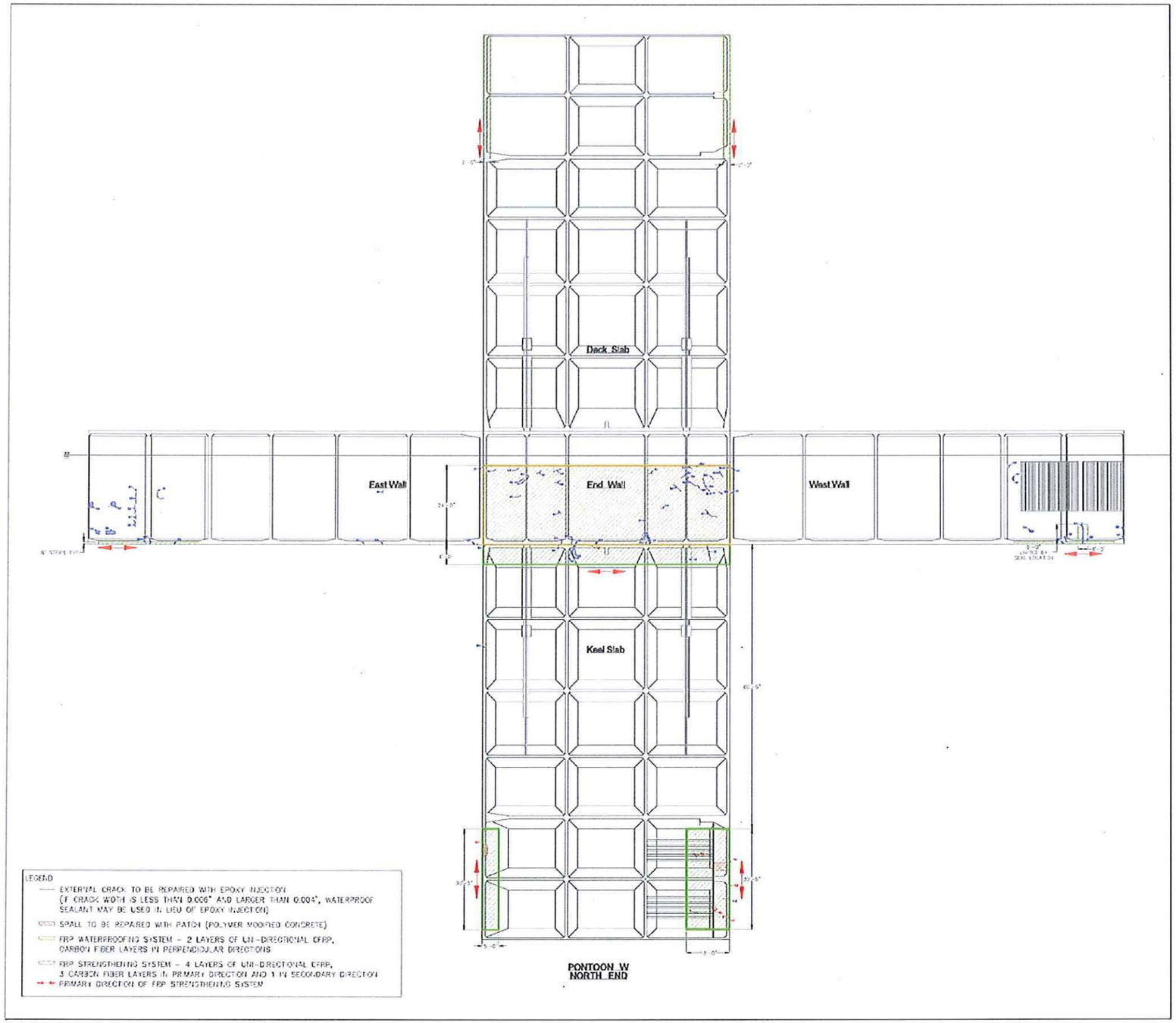

Figure A-3 Pontoon W North End Repair Plan

Contract No.: 008066
Change Order No.: 108
Page 105 of 105

Ben C. Gerwick, Inc.
a CONI company

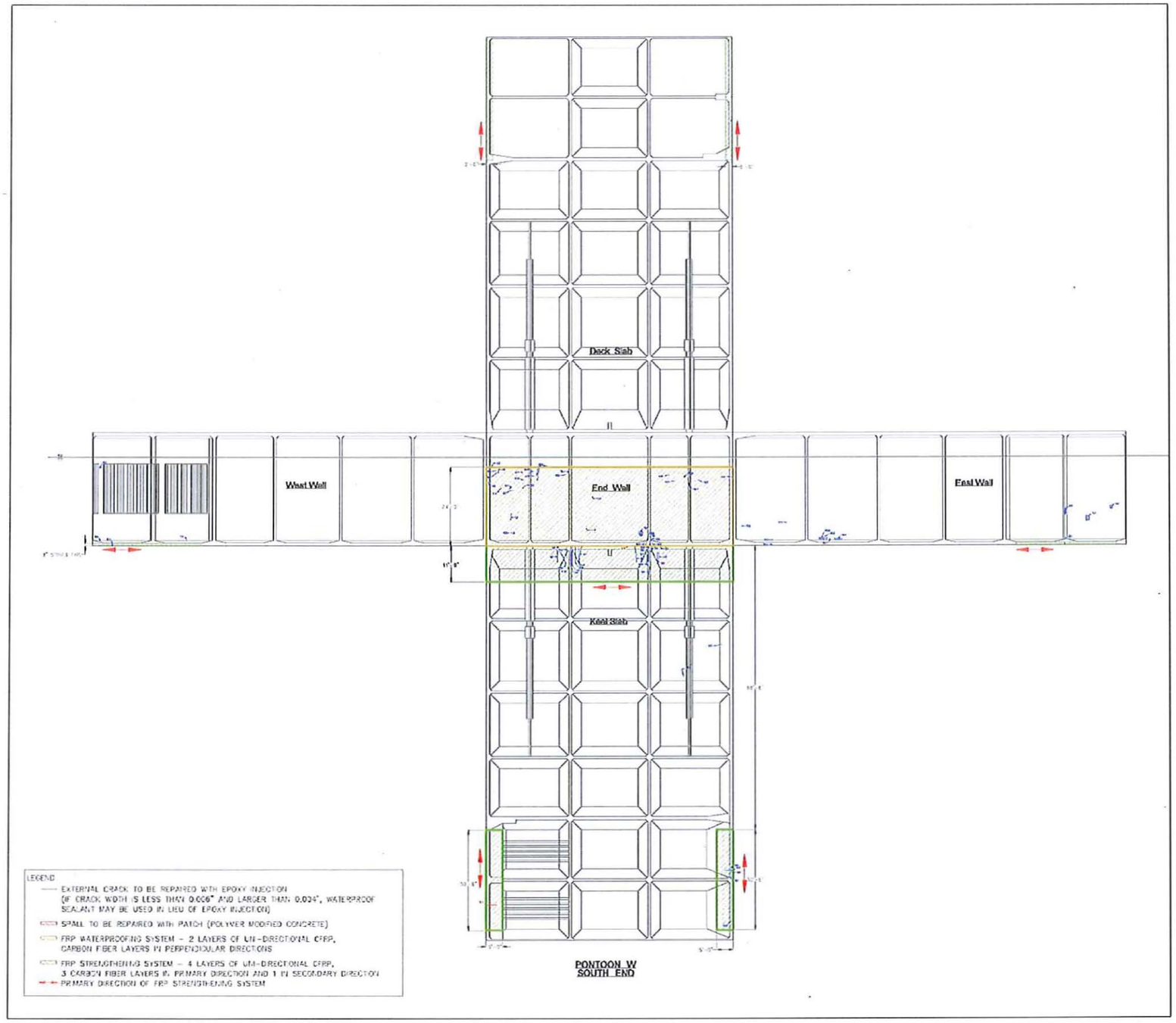

Figure A-4 Pontoon W South End Repair Plan

Washington State Department of Transportation

Memorandum

DATE: July 24, 2013

TO: Jeff Carpenter
State Construction Engineer, Headquarters, Mail Stop 47354

THRU: Julie Meredith
Program Director, SR 520 Program, Mail Stop NB82-99

FROM: Dave Ziegler/Jon Danks
Principal Engineer/Business Manager, Pontoon Construction Project, Mail Stop NP40
(360) 500-4422

PROJECT: C-7826 SR 520
SR 520 Pontoon Construction Design-Build Project

SUBJECT: **CO # 101 – Cycle Two Pontoons 2013**

CATEGORY "A" & "B" – Change to the General and Technical Requirements

PRIMARY REASON FOR CHANGE: Design Changes

Requested Action:

☐ Review ☐ Review and Region Execution ☒ Review and HQ Execution

Change Approval

Approval to proceed with negotiations and settlement of this change order included:

- Project Office: Dave Ziegler and Tom Baker
- Region / Program Office: Tom Horkan and Julie Meredith
- State Construction Engineer Office: Mark Gaines/Jeff Carpenter
- FHWA: Anthony Sarhan

General Description of the Change

This change order provides additional compensation and contract time to the Design-Builder (D-B) for added work and production impacts related to modifications of the post-tensioning (PT) system, mitigating and repairing end wall cracking, installing transverse PT retrofit, and associated work required as a result of these design modifications during the Cycle 2 Construction Segment. WSDOT directed this change to address design errors identified during Cycle 1.

This change order also settles all outstanding time related issues, including productivity and time related impacts, for the period up to and including Segment

Physical Completion of the last pontoon in Cycle 2, except for mutually agreed upon items specifically listed in the change order.

A separate change order is being issued to the D-B to incorporate the technical modifications and Contract Plan revisions associated with the Cycle 2 design changes. That change order will be "no-cost" and "no-time", as all cost and time associated with such modifications/revisions is included in this change order (CO # 101).

Evolution of the Change/Entitlement Review

This change order covers four major areas where entitlement for additional compensation and contract time is warranted:

1. PT Design Changes
2. End Wall Decoupling
3. Transverse PT
4. Impacts (inefficiencies and extended overhead)

These changes were implemented after the start of Cycle 2 pontoon construction.

1. **PT Design Changes**

Description:
Due to PT spalling experienced in Cycle 1, the PT profile and reinforcement for the Types 1/1A and 3 pontoons were analyzed and redesigned for Cycle 2. Changes included modifications to keel slabs, deck slabs and walls primarily in the bolt beam areas. These modifications included moving anchorage head locations, modifying parabolic curves, adding and modifying rebar, and changing duct material types in some areas.

The timeline of significant events is as follows:

- 7/31/12: Basin being prepared for Cycle 2
- 8/3/2012: WSDOT SL#118 - Direction for Cycle 2 Construction
- 8/10/12: WSDOT Email Preliminary PT Tendon Details
- 8/15/2012: WSDOT SL#120 - WSDOT Transmits Revised PT Tendon Details - (Plan Sheets 1-9)
- 8/27/2012: WSDOT SL#122 - Transmittal New & Revised Draft Plan Sheets 1 & 6-9 and New Plan Sheets 10-14
- 9/7/2012: WSDOT SL#123 - NTP for End Wall Rebar Revisions
- 9/20/2012: WSDOT SL#185 - KG Concerned About Response to RFI 455/Design Standard
- 10/3/2012: WSDOT SL# 138 - Cross Pontoon Hatch Changes: Response to KG SL#186/Build Hatches per Plan
- 10/25/2012: WSDOT SL#141 - PT Tendon Profile Plan Sheet Transmittal: Final Stamped Plan Sheets
- 2/20/2013: RFI 675 - PT Placement Tolerance Pnt A submitted

Entitlement Review:

1. As Engineer of Record (EOR) for the Pontoons, WSDOT was responsible for providing the Pontoon design for use by the D-B. Changes were directed by WSDOT. The D-B was impacted by the changes made to the design and is entitled to cost and time for this issue.

2. **End Wall Decoupling**

Description:
Due to the cracking found in the Type 1 and Type 3 Pontoon end walls during Cycle 1, the design was evaluated by WSDOT HQ Bridge office and the Expert Review Panel. Since the crack patterns were concentrated around the areas where the interior longitudinal walls intersected the end walls, it was recommended that a decoupling feature be included in Cycle 2. The decoupling would provide room for the end wall to move inward during tensioning without the resistance produced by the stationary longitudinal interior walls by providing a space between the interior precast panel walls and the end walls until after longitudinal post-tensioning. Further analysis using a Finite Element Model determined the decoupling was ineffective in reducing end wall cracking and instead a transverse PT retrofit design was developed to mitigate the end wall cracking.

The timeline of significant events is as follows:

- 9/18/12: WSDOT SL #131 transmitted draft plan sheets which provided the de-coupling elements for the Type 3 Pontoon
- On 10/3/12, WSDOT SL #139 transmitted decoupling details for the Type 1/1A Pontoons
- 10/30/12: WSDOT SL #142 transmitted revised draft plan sheets
- 12/5/12: WSDOT SL #149 rescinded Type 1/1A decoupling direction
- 1/3/13: WSDOT provided the final stamped and signed drawings
- Design Builder transmitted three SL's (#194, 196 and 203) expressing concern about working off of unstamped drawings and ensuring that the added CJ's were water tight (they requested additional measures be provided by WSDOT).
- 2/6/13: WSDOT SL #149 notified the Design Builder that the decoupling for the Type 3 Pontoon was no longer needed with the installation of the transverse PT retrofit.

Entitlement Review:

1. As Engineer of Record (EOR) for the Pontoons, WSDOT was responsible for providing the Pontoon design for use by the DB. Changes were directed by WSDOT. The D-B was impacted by the changes made to the design is entitled to cost and time for this issue.

3. **Transverse PT**

Description:

Instead of the decoupling option (addressed above) the decision was made to install transverse PT retrofit on the Cycle 2 pontoons. Final design included adding ducts above the keel slab and below the deck slab that runs the full width of the Type 1/1A and Type 3 pontoons and include anchor blocks and exterior encasement. Work included coring, drilling and excavation of the existing pontoon.

Significant Events:

- 1/3/13: WSDOT transmitted preliminary draft plans for the Type 1/1A Pontoons Transverse PT Retrofit
- 1/25/13: WSDOT transmitted a revised draft design and notice to proceed to order the bearing plates for the Type 1/1A pontoons
- 2/2/13: WSDOT transmitted preliminary draft plans for the Type 3 Pontoon Transverse PT Retrofit
- 2/8/13: WSDOT issued notice to proceed to order the bearing plates for the Type 3 Pontoon
- 2/14/13: WSDOT transmitted stamped and signed plans for the Type 1/1A Transverse PT Retrofit
- 2/16/13: WSDOT provided a revised draft design for Type 3
- 2/25/13: WSDOT transmitted stamped and signed plans for the Transverse PT Retrofit Pontoon Type 3

Entitlement Review:

1. As Engineer of Record (EOR) for the Pontoons, WSDOT was responsible for providing the Pontoon design for use by the DB. Changes were directed by WSDOT. The D-B was impacted by the changes made to the design and is entitled to cost and time for this issue.

4. **Impacts (inefficiencies and extended overhead)**

An agreement on entitlement has been reached for impacts related to productivity and time related effects.

Productivity:
The design modifications required for Cycle 2 impacted the D-B's ability to realize efficiencies between cycles, i.e., Cycle 2 production rates should have been substantially higher than Cycle 1 production rates. In addition, the iterative nature of the design development, and modifications to design direction (availability of preliminary and final designs, rescinding of the de-coupling/addition of the transverse PT retrofit and on-going conflict resolution) directly affected production rates throughout Cycle 2.

Time Related Effect:
Following damage and during repairs to the pontoons during Cycle 1, WSDOT and the Design Builder were evaluating the causes of the failures and making recommendations for design modifications to Cycle 2

construction. As a result of this process, there were impacts to the Design Builder's ability to plan certain portions of the work, order the necessary material, and begin certain areas of work.

The cyclical nature of pontoon construction and the aggressive schedule requires work on one cycle to begin as the prior cycle is nearing completion. Due to post tensioning (PT) and end wall (EW) design modifications, the Design Builder was not able to take full advantage of the transition between Cycle 1 and Cycle 2 Construction Segments. Cycle 1 float-out occurred on 7/30/12, without the design being available for what would be constructed in Cycle 2.

The changes and impacts included in this change order significantly affected the D-B and its primary subcontractors in reinforcing steel and post-tensioning. Other subcontractors and suppliers were also impacted due to delays and/or changes to the work.

Throughout the design modifications and negotiations, all individuals with change approval authority have been kept informed and participated in key decisions.

Prior Approval
Written orders were provided to the Design-Builder to proceed with this work in advance of an executed change order to mitigate adverse cost and schedule impacts to the SR 520 PCP and FB&L Contracts.

Payment
In accordance with General Provision 1-04.4, the Design-Builder is entitled to compensation for additional cost of labor, material and equipment as a result of this change. The total negotiated lump-sum cost of this change order is $22,434,528. The cost is supported by an independent Engineer's Estimate (Attachment B).

Negotiations for this change order took into account all change orders for miscellaneous Cycle 2 issues that were previously executed, in order to ensure that WSDOT is not paying twice for indirect costs during this time period (i.e. time related effects, productivity, and home office overhead). Future change order negotiations to close out issues contained in Attachment A (exclusion list) will not include the indirect costs contained in this change order.

Time
Contract time was affected by this change. An analysis of the project schedule was conducted, which concluded the critical path for Cycle 2 was impacted by these changes to the extent included in the change order. Each of the Segment Physical Completion dates and Project Physical Completion were extended by 131 calendar days. See attachment C.

Release and Exceptions
This change order releases WSDOT from all claims or disputes through Segment Physical Completion of Cycle 2, except for specific issues reserved by the

Design-Builder. The specific matters excluded are listed in the change order, all of which are reserved for direct cost only if entitlement is found to be justified.

Attachments
CCIS Change Order Document (11 pages)
Change Order Checklist (2 pages)
Exceptions to Release (Attachment A – part of the change order document)
Engineer's Estimate (Attachment B)
Schedule Analysis (Attachment C)

File: CO Files: CO 101; Project Wise: 16.03.101

WASHINGTON STATE
DEPARTMENT OF TRANSPORTATION
CHANGE ORDER

DATE: 07/10/13
Page 1 of 11

CONTRACT NO: 007826
FEDERAL AID NO:
CONTRACT TITLE: SR 520 PONTOON CONSTRUCTION DESIGN-BUILD PROJECT
CHANGE ORDER NO: 101 CYCLE TWO PONTOONS 2013

PRIME CONTRACTOR: 200079843 KIEWIT-GENERAL, A JOINT VENTURE
33455 6TH AVE S
FEDERAL WAY WA 98003-6335

(X) Ordered by Engineer under the terms of Section 1-04.4 of the Standard Specifications

(X) Change proposed by Contractor

ENDORSED BY:	SURETY CONSENT:
CONTRACTOR	ATTORNEY IN FACT
DATE 7/11/13	DATE

ORIGINAL CONTRACT AMOUNT:	367,330,000.00
CURRENT CONTRACT AMOUNT:	389,303,967.00
ESTIMATED NET CHANGE THIS ORDER:	22,434,528.00
ESTIMATED CONTRACT TOTAL AFTER CHANGE:	411,738,495.00

Approval Required: ( ) Region ( ) Olympia Service Center ( ) Local Agency

(X) APPROVAL RECOMMENDED ( ) EXECUTED	EXECUTED:
PROJECT ENGINEER	STATE CONSTRUCTION ENGINEER
DATE 7-11-13	DATE 7-17-2013
(X) APPROVAL RECOMMENDED ( ) EXECUTED	OTHER APPROVAL WHEN REQUIRED
REGIONAL ADMIN. BY:	SIGNATURE Anthony Sarhan DATE 7/23/13
DATE 7/17/13	FHWA REPRESENTING

CG02v04 (revised Feb 2005)

WASHINGTON STATE
DEPARTMENT OF TRANSPORTATION
CHANGE ORDER

CONTRACT NO: 007826
FEDERAL AID NO:
CONTRACT TITLE: SR 520 PONTOON CONSTRUCTION DESIGN-BUILD PROJECT
CHANGE ORDER NO: 101 CYCLE TWO PONTOONS 2013

PRIME CONTRACTOR: 200079843 KIEWIT-GENERAL, A JOINT VENTURE
33455 6TH AVE S
FEDERAL WAY WA 98003-6335

(X) Ordered by Engineer under the terms of Section 1-04.4 of the Standard Specifications

(X) Change proposed by Contractor

ENDORSED BY:	SURETY CONSENT: Travelers Casualty and Surety Company of America
CONTRACTOR	ATTORNEY IN FACT Traci Sutton
DATE	7/11/13 DATE

ORIGINAL CONTRACT AMOUNT:	367,330,000.00
CURRENT CONTRACT AMOUNT:	389,303,967.00
ESTIMATED NET CHANGE THIS ORDER:	22,434,528.00
ESTIMATED CONTRACT TOTAL AFTER CHANGE:	411,738,495.00

Approval Required: ( ) Region ( ) Olympia Service Center ( ) Local Agency

( ) APPROVAL RECOMMENDED ( ) EXECUTED	EXECUTED:
PROJECT ENGINEER	STATE CONSTRUCTION ENGINEER
DATE	DATE
( ) APPROVAL RECOMMENDED ( ) EXECUTED	OTHER APPROVAL WHEN REQUIRED
REGIONAL ADMIN: BY:	SIGNATURE DATE
DATE	REPRESENTING

CG02v04 (revised Feb 2005)

WARNING: THIS POWER OF ATTORNEY IS INVALID WITHOUT THE RED BORDER

POWER OF ATTORNEY

TRAVELERS

Farmington Casualty Company
Fidelity and Guaranty Insurance Company
Fidelity and Guaranty Insurance Underwriters, Inc.
St. Paul Fire and Marine Insurance Company
St. Paul Guardian Insurance Company

St. Paul Mercury Insurance Company
Travelers Casualty and Surety Company
Travelers Casualty and Surety Company of America
United States Fidelity and Guaranty Company

Attorney-In Fact No. 225764

Certificate No. 005470600

KNOW ALL MEN BY THESE PRESENTS: That Farmington Casualty Company, St. Paul Fire and Marine Insurance Company, St. Paul Guardian Insurance Company, St. Paul Mercury Insurance Company, Travelers Casualty and Surety Company, Travelers Casualty and Surety Company of America, and United States Fidelity and Guaranty Company are corporations duly organized under the laws of the State of Connecticut, that Fidelity and Guaranty Insurance Company is a corporation duly organized under the laws of the State of Iowa, and that Fidelity and Guaranty Insurance Underwriters, Inc., is a corporation duly organized under the laws of the State of Wisconsin (herein collectively called the "Companies"), and that the Companies do hereby make, constitute and appoint

Philip G. Dehn, Terry K. Bartel, Tammy Pike, Paul A. Foss, Lisa Buller, Marie Huggins, and Traci Sutton

of the City of Omaha, State of Nebraska, their true and lawful Attorney(s)-in-Fact, each in their separate capacity if more than one is named above, to sign, execute, seal and acknowledge any and all bonds, recognizances, conditional undertakings and other writings obligatory in the nature thereof on behalf of the Companies in their business of guaranteeing the fidelity of persons, guaranteeing the performance of contracts and executing or guaranteeing bonds and undertakings required or permitted in any actions or proceedings allowed by law.

IN WITNESS WHEREOF, the Companies have caused this instrument to be signed and their corporate seals to be hereto affixed, this 2nd day of May, 2013.

Farmington Casualty Company
Fidelity and Guaranty Insurance Company
Fidelity and Guaranty Insurance Underwriters, Inc.
St. Paul Fire and Marine Insurance Company
St. Paul Guardian Insurance Company

St. Paul Mercury Insurance Company
Travelers Casualty and Surety Company
Travelers Casualty and Surety Company of America
United States Fidelity and Guaranty Company

By: _____
Robert L. Raney, Senior Vice President

State of Connecticut
City of Hartford ss.

On this the 2nd day of May, 2013, before me personally appeared Robert L. Raney, who acknowledged himself to be the Senior Vice President of Farmington Casualty Company, Fidelity and Guaranty Insurance Company, Fidelity and Guaranty Insurance Underwriters, Inc., St. Paul Fire and Marine Insurance Company, St. Paul Guardian Insurance Company, St. Paul Mercury Insurance Company, Travelers Casualty and Surety Company, Travelers Casualty and Surety Company of America, and United States Fidelity and Guaranty Company, and that he, as such, being authorized so to do, executed the foregoing instrument for the purposes therein contained by signing on behalf of the corporations by himself as a duly authorized officer.

In Witness Whereof, I hereunto set my hand and official seal.
My Commission expires the 30th day of June, 2016.

MARIE C. TETREAULT NOTARY PUBLIC CONNECTICUT

Marie C. Tetreault
Marie C. Tetreault, Notary Public

58440-8-12 Printed in U.S.A.

WARNING: THIS POWER OF ATTORNEY IS INVALID WITHOUT THE RED BORDER

This Power of Attorney is granted under and by the authority of the following resolutions adopted by the Boards of Directors of Farmington Casualty Company, Fidelity and Guaranty Insurance Company, Fidelity and Guaranty Insurance Underwriters, Inc., St. Paul Fire and Marine Insurance Company, St. Paul Guardian Insurance Company, St. Paul Mercury Insurance Company, Travelers Casualty and Surety Company, Travelers Casualty and Surety Company of America, and United States Fidelity and Guaranty Company, which resolutions are now in full force and effect, reading as follows:

RESOLVED, that the Chairman, the President, any Vice Chairman, any Executive Vice President, any Senior Vice President, any Vice President, any Second Vice President, the Treasurer, any Assistant Treasurer, the Corporate Secretary or any Assistant Secretary may appoint Attorneys-in-Fact and Agents to act for and on behalf of the Company and may give such appointee such authority as his or her certificate of authority may prescribe to sign with the Company's name and seal with the Company's seal bonds, recognizances, contracts of indemnity, and other writings obligatory in the nature of a bond, recognizance, or conditional undertaking, and any of said officers or the Board of Directors at any time may remove any such appointee and revoke the power given him or her; and it is

FURTHER RESOLVED, that the Chairman, the President, any Vice Chairman, any Executive Vice President, any Senior Vice President or any Vice President may delegate all or any part of the foregoing authority to one or more officers or employees of this Company, provided that each such delegation is in writing and a copy thereof is filed in the office of the Secretary; and it is

FURTHER RESOLVED, that any bond, recognizance, contract of indemnity, or writing obligatory in the nature of a bond, recognizance, or conditional undertaking shall be valid and binding upon the Company when (a) signed by the President, any Vice Chairman, any Executive Vice President, any Senior Vice President or any Vice President, any Second Vice President, the Treasurer, any Assistant Treasurer, the Corporate Secretary or any Assistant Secretary and duly attested and sealed with the Company's seal by a Secretary or Assistant Secretary; or (b) duly executed (under seal, if required) by one or more Attorneys-in-Fact and Agents pursuant to the power prescribed in his or her certificate or their certificates of authority or by one or more Company officers pursuant to a written delegation of authority; and it is

FURTHER RESOLVED, that the signature of each of the following officers: President, any Executive Vice President, any Senior Vice President, any Vice President, any Assistant Vice President, any Secretary, any Assistant Secretary, and the seal of the Company may be affixed by facsimile to any Power of Attorney or to any certificate relating thereto appointing Resident Vice Presidents, Resident Assistant Secretaries or Attorneys-in-Fact for purposes only of executing and attesting bonds and undertakings and other writings obligatory in the nature thereof, and any such Power of Attorney or certificate bearing such facsimile signature or facsimile seal shall be valid and binding upon the Company and any such power so executed and certified by such facsimile signature and facsimile seal shall be valid and binding on the Company in the future with respect to any bond or understanding to which it is attached.

I, Kevin E. Hughes, the undersigned, Assistant Secretary, of Farmington Casualty Company, Fidelity and Guaranty Insurance Company, Fidelity and Guaranty Insurance Underwriters, Inc., St. Paul Fire and Marine Insurance Company, St. Paul Guardian Insurance Company, St. Paul Mercury Insurance Company, Travelers Casualty and Surety Company, Travelers Casualty and Surety Company of America, and United States Fidelity and Guaranty Company do hereby certify that the above and foregoing is a true and correct copy of the Power of Attorney executed by said Companies, which is in full force and effect and has not been revoked.

IN TESTIMONY WHEREOF, I have hereunto set my hand and affixed the seals of said Companies this 11th day of July, 20 13

Kevin E. Hughes, Assistant Secretary

To verify the authenticity of this Power of Attorney, call 1-800-421-3880 or contact us at www.travelersbond.com. Please refer to the Attorney-In-Fact number, the above-named individuals and the details of the bond to which the power is attached.

CONTRACT NO: 007826 **CHANGE ORDER NO:** 101

All work, materials, and measurements to be in accordance with the provisions of the Standard Specifications and Special Provisions for the type of construction involved.

This contract is revised as follows:

All work shall be in accordance with Contract Documents listed in the Contract Form.

This change order addresses Category A and B changes in accordance with the General Provisions Section 1-04.4(3), as well as WSDOT directed changes in accordance with the General Provisions Section 1-04.4.

Description:
Unless specifically noted otherwise herein, the purpose of this change order is to compensate the Design-Builder and its consultants, subcontractors and suppliers in full for all outstanding claims or disputes of any nature, known or unknown, for additional compensation and/or contract time for which WSDOT is responsible under the Contract related to the Work performed up to and including Segment Physical Completion of the last Pontoon in Cycle 2.

The specific technical and design changes incorporated into the Pontoons constructed in Cycle 2 shall be addressed under a separate no-cost, no-time change order for documentation purposes.

Contract Documents:
The following Contract Documents are hereby modified as follows:

The Contract Form, Item 4.2 "Deadline for Physical Completion", previously modified by Change Order #10 and Change Order #85, is revised as follows:

Delete:
"The deadline for Project Physical Completion is August 29, 2014."

Add:
"The deadline for Project Physical Completion is January 7, 2015."

Exhibit B, WSDOT Identified Betterments, previously modified by Change Order #10 and Change Order #85, are revised as follows:

Delete:

"1A. Segment Physical Completion of the second delivery cycle of pontoons shall occur no later than November 4, 2012. The Design-Builder agrees to pay liquidated damages according to Section 1-08.9(1) of the General Provisions for each day of delay in achieving Segment Physical Completion of the second delivery cycle of pontoons after November 4, 2012, and authorizes WSDOT to deduct these liquidated damages from any money due to the Design-Builder.

1B. Segment Physical Completion of the fourth delivery cycle of pontoons

shall occur no later than October 1, 2013. The Design-Builder agrees to pay liquidated damages according to Section 1-08.9(1) of the General Provisions for each day of delay in achieving Segment Physical Completion of the forth delivery cycle of pontoons after October 1, 2013, and authorizes WSDOT to deduct these liquidated damages from any money due to the Design-Builder.

2. Segment Physical Completion of the final delivery cycle of pontoons shall occur no later than June 30, 2014. The Design-Builder agrees to pay liquidated damages according to Section 1-08.9(1) of the General Provisions for each day of delay in achieving Segment Physical Completion of the final delivery cycle of pontoons after June 30, 2014, and authorizes WSDOT to deduct these liquidated damages from any money due to the Design-Builder."

Add:

"1A. Segment Physical Completion of the second delivery cycle of pontoons shall occur no later than March 15, 2013. The Design-Builder agrees to pay liquidated damages according to Section 1-08.9(1) of the General Provisions for each day of delay in achieving Segment Physical Completion of the second delivery cycle of pontoons after March 15, 2013, and authorizes WSDOT to deduct these liquidated damages from any money due to the Design-Builder.

1B. Segment Physical Completion of the fourth delivery cycle of pontoons shall occur no later than February 9, 2014. The Design-Builder agrees to pay liquidated damages according to Section 1-08.9(1) of the General Provisions for each day of delay in achieving Segment Physical Completion of the forth delivery cycle of pontoons after February 9, 2014, and authorizes WSDOT to deduct these liquidated damages from any money due to the Design-Builder.

2. Segment Physical Completion of the final delivery cycle of pontoons shall occur no later than November 8, 2014. The Design-Builder agrees to pay liquidated damages according to Section 1-08.9(1) of the General Provisions for each day of delay in achieving Segment Physical Completion of the final delivery cycle of pontoons after November 8, 2014, and authorizes WSDOT to deduct these liquidated damages from any money due to the Design-Builder."

General Provisions:
Chapter 1 General Provisions, Section 1-08.9(1) Liquidated Damages For Delay, previously modified by Change Order #10 and Change Order #85, is revised as follows:

Delete:

"1. To pay (according to the following formula) liquidated damages for each day of delay in achieving:
(a) Second Delivery Cycle Segment Physical Completion beyond November 4, 2012;
(b) Fourth Delivery Cycle Segment Physical Completion beyond October 1, 2013;
(c) Final Delivery Cycle Segment Physical Completion beyond June 30, 2014;
(d) Project Physical Completion beyond August 29, 2014, and"

CONTRACT NO: 007826 **CHANGE ORDER NO:** 101

Add:

"1. To pay (according to the following formula) liquidated damages for each day of delay in achieving:
(a) Second Delivery Cycle Segment Physical Completion beyond March 15, 2013;
(b) Fourth Delivery Cycle Segment Physical Completion beyond February 9, 2014;
(c) Final Delivery Cycle Segment Physical Completion beyond November 8, 2014;
(d) Project Physical Completion beyond January 7, 2015"

Measurement:
There is no specific unit of measure for the new lump sum item, CO 101 "Cycle Two Pontoons 2013",

Payment:
The lump sum item, CO 101 "Cycle Two Pontoons 2013", in the amount of Twenty Two Million Four Hundred Thirty Four Thousand Five Hundred Twenty Eight Dollars ($22,434,528), shall be full and final compensation and settlement for all direct, indirect, overhead and other costs, including, but not limited to all impact or disruption costs of any nature, realized by the Design-Builder and/or its subcontractors, consultants, and suppliers for all Work performed through Cycle 2 Segment Physical Completion except as specified below.

WSDOT and the D-B have mutually agreed to defer the assessment of liquidated damages for Cycle 2.

Contract Time:
Contract Time is adjusted as described above in this change order.

Release:
By signing this change order, the Design-Builder, Kiewit-General JV, agrees and certifies that any and all claims or disputes of whatsoever kind or nature, known or unknown, through Segment Physical Completion of the final Cycle 2 Pontoon for which WSDOT is responsible under the Contract are satisfied in full and the State of Washington is hereby released and discharged in full from said claims or disputes.

Exceptions To Release:
The following matters are specifically excluded from the above release. These exceptions are an inclusive list of all work performed prior to Segment Physical Completion of the final Cycle 2 Pontoon, for which the Design-Builder is reserving certain rights. Inclusion in the list below does not constitute an acknowledgment by WSDOT that entitlement to a particular issue exists.

The Design-Builder reserves its rights, to the extent provided for under the Contract, to seek:

CONTRACT NO: 007826 **CHANGE ORDER NO:** 101

An adjustment in the Contract Price only, not Contract Time, for escalation costs for labor, equipment, and materials associated with the time extension granted herein.

An adjustment in Contract Price and/or Contract Time, as applicable, to address the effect that tides may have, if any, on the float out dates on future cycles that occurs as a result of the adjustment in Contract Time granted herein.

An adjustment in the Contract Price only, not Contract Time, for added costs resulting from an increase in DBE requirements should WSDOT determine increased DBE participation is required as a result of the change order.

An adjustment in Contract Price, not Contract Time, for added maintenance cost for formwork, trestle, and crane mats on future cycles that occurs as a result of the adjustment of Contract Time granted herein.

An adjustment in Contract Price for the items listed below. There shall be no adjustment to Contract Time for the items listed below, unless the Work occurred after Segment Physical Completion of the final Cycle 2 Pontoon. (The PCO numbers listed below refer to Kiewit-General's Potential Change Order (PCO) tracking numbers, all of which are more specifically described in Attachment "A".

PCO #018 Tribal MOA fishing vs. float out
PCO #027 PCS Rebar Escalation
PCO #045 Post Tensioning Conflicts
PCO #050 Buy America Requirements for Thermal Control Piping
PCO #055 Revised Sand and Gravel Permit
PCO #062 Stormwater Pond Performance
PCO #063 Prevailing Wage for Towing
PCO #079 Type 3 Pontoon Relocation of PT Duct to relieve conflict with Ballast Port
PCO #083 Crack Repair in Pontoon Soffits
PCO #095 Demolition of Mock-up
PCO #096 Stop Work on Type 4 Keel Slab Pour Cycle 2
PCO #097 RFI 482 Type 4/4A Column Sleeve Conflict
PCO #100 RFI 484 - Type 1 pontoon W102 bar conflict - Cycle 2
PCO #101 RFI 483, 496 - Keel slab rebar spacing in Type 5, Type 4/4A, and 1/1A due to conflicts
PCO #105 RFI 479 - Adjustment of wall rebar in type 4 pontoons to achieve insert electrical isolation
PCO #107 Type 1/1A C105 Column Rebar
PCO #108 RFC Drawing Process Changes
PCO #109 Crack Repair in Pontoon Closure Pours
PCO #111 Cycle 2 Fish Handling Revisions
PCO #112 RFI 477 - Hawse Pipe Vertical Rebar Splice
PCO #118 Statistical Acceptance of Material
PCO #126 Crack Repair Pontoon Exterior Walls
PCO #129 RFI 407 - 90 Degree Tails Cycle 1 Type 1

WASHINGTON STATE
DEPARTMENT OF TRANSPORTATION
CHANGE ORDER

CONTRACT NO: 007826 **CHANGE ORDER NO:** 101

PCO #130 DBE Participation on Change Order Work
PCO #133 Crack Repair Pontoon Keel Slab
PCO #137 Precast Tail Cutting for PT Duct and Rebar Conflicts - Type 3
PCO #138 Repair void on Pontoon V Keel slab at FBL project
PCO #143 Pontoon U Hawse Pipe Inserts
PCO #145 RFI 577 - Top Deck PT Conflicts - Cycle 2-6
PCO #148 RFI 589 - Additional Bar to Sweep Ballast Ports
PCO #151 Materials Approval Engineer
PCO #155 Top Deck Insert Isolation Conflicts
PCO #189 Pontoon Rebar Moves for Electrical Isolation
PCO #190 RFI 598 - Using Shims for Isolation Issues
PCO #196 RFI 619 - C205 #5 Fillet Bar/CJ Conflict Type 3 at 1L/5-9T
PCO #197 FB&L Work Agreement - Towing Bollards
PCO #200 Cylinder End Grinder - Honing Machine
PCO #204 RFI 613 - M11 Clarification of 6" Fillet at Columns - SA28
PCO #206 A244 #9 Cable Track Bars in Type 3 and Type 1/1A Pontoons
PCO #209 RFI 622 - Moorage Cleat Insert - Rebar Congestion Type 4/4A
PCO #210 RFI 655 - Thinning Bar Tail Groups on A Pontoon Top Deck
PCO #211 RFI 659 - Type 3 - F204 #5 Interior Fillet Bar Conflict
PCO #213 Remove Concrete Cover On "A" Pontoon w/o Voids
PCO #219 Cycle 1 Escalation
PCO #221 Dredging of Launch Channel
PCO #222 Cycle 2 - Basin Fender Extension
PCO #223 Fall Protection Change from 6' to 4'
PCO #225 Remove Concrete Cover On "A" Pontoon w/ Voids
PCO #227 Cycle 2 - Broken Strands during Stressing
PCO #228 Cycle 2 - Leak Repair
PCO #229 Inspection & Repairs During Pontoon Float-Out
PCO #230 Two Coat Field Painting of Anchor Cable Tracks
PCO #231 Minor Underwater Repairs - Technical Language
PCO #232 Corrugated Pipe Inserts for Bollard anchor bolts
PCO #236 Cycle 1 & 2 - Temp Access Door Pourback Sequence
PCO #238 SSP Column Connections
PCO #239 LP HR Column Connections
PCO #240 Grout Tube Voids Pnt A & Q

WASHINGTON STATE
DEPARTMENT OF TRANSPORTATION
CHANGE ORDER

CONTRACT NO: 007826 **CHANGE ORDER NO:** 101

ITEM NO	GROUP NO	STD ITEM	ITEM DESCRIPTION	UNIT MEASURE	UNIT PRICE	EST QTY CHANGE	EST AMT CHANGE
1033	02		CYCLE TWO PONTOONS 2013	L.S.	0.00	0.00	22,434,528.00

22,434,528.00

C-7826 - SR 520 Pontoon Construction Project

Change Order #101 - Cycle Two Pontoons 2013

Attachment "A"

KG PCO #	WSDOT PCI #	PCO DESCRIPTION	RFI	WSDOT LETTERS	KG LETTERS	OTHER DOCS.	ISSUE DETAIL
18		Tribal MOA fishing vs. float out					Goal is for WSDOT & Tribe to coordinate float out and fishing date so as to not impact KG float out. PCO is open to evaluate risk associated with Tribal fishing and float out operation.
27		PCS Rebar Escalation		SL 079	SL 088	Letter from PCS to KG, Email from PCS to KG.	KG discussed notice requirements with WSDOT. PCS to provide additional backup to KG. Between the time of bid submission in November of 2009 and through February 1, 2011, the price of steel doubled. Gerdau has communicated to KG that their entitlement to pursue the unexpected change. KG confirmed with Brian Briggs on 1/18/13 that Gerdau is still pursuing this issue. KG is keeping this PCO open to pursue impacts on behalf of the subcontractor Gerdau.
45	87	Post Tensioning Conflicts	107, 113				Avar/SDI to assess impacts of sweeping duct to avoid conflicts detailed per RFI 107 and RFI 113. KG is keeping this PCO open to pursue impacts on behalf of the subcontractor SDI/Avar.
50	20	Buy America Requirements for Thermal Control Piping		SL 96	SL 108, 130		KG contends that the thermal control piping is an element which will remain in place at the contractor's convenience and therefore not subject to Buy America requirements.
55		Revised Sand and Gravel Permit				Letter from Ecology	The revised Sand and Gravel Permit required a lower level of turbidity for the discharge of storm water than the original contract and permit required. KG to evaluate impacts of turbidity levels currently vs. original permit.
62		Stormwater Pond Performance			SL 115		Water treatment system does not reduce turbidity as required. KG has reviewed the storm water design with HNTB and believes that the storm water facilities were designed as required by sections 2.17 and 2.18 of the RFP and meet the treatment criteria prescribed in the 2008 WSDOT Highway Runoff Manual M 31-16, the WSDOT Hydraulics Manual M 23-03, and the Hydraulic Report in Appendix H. KG is investigating the cause of this issue and will share information with WSDOT as it becomes available.
63		Prevailing Wage for Towing			SL 118	Email from WSDOT 12/15/11	KG has received WSDOT's determination that tug service in support of dredging & float out operations will be treated as a subcontractor and thereby subject to prevailing wage requirements. KG disagrees with this determination and also believes that this determination is a departure from the precedents established on previous WSDOT contracts. This represents a changed condition for which KG will pursue an equitable adjustment.
79	87	Type 3 Pontoon Relocation of PT Duct to relieve conflict with Ballast Port	347 (107, 302, 208, 308, 368)			WSDOT Email 11/27/12 - Draft CO	SDI feels they may be entitled to cost recovery to accommodate changes to the duct to relief conflict in the Type 3's. KG is keeping this PCO open to pursue impacts on behalf of the subcontractor SDI.
83	95	Crack Repair in Pontoon Soffits	420 (VOID), 552, 656, 698, 706, 719	SL 156, 157, 172 5/9/13, 175 6/10/13	SL 147 & 234 4/8/13		KG notified WSDOT of non-structural top deck concrete cracks developing after the thermal control period had been completed. KG's thermal control consultant contributes the cracks to shrinkage cracks related to the design of the pontoon. KG advised WSDOT that any work associated with repairing top deck cracking is a change to the Contract. (KG SL 147) WSDOT indicated that KG may submit protest for all impacts via WSDOT SL 156 in response to KG SL 147.
95		Demolition of Mock-up					WSDOT has made comments that the expectation is for the Mock-up not to remain on site after the completion of Pontoon construction. KG's position is that the demolition of the Mock-up is a change to the Contract.
96	136	Stop Work on Type 4 Keel Slab Pour Cycle 2		SL 126, 133	SL 241	WSDOT e-mail on 9/10/2012, WSDOT e-mail 11/1/12	Due to rebar congestion on end walls of the Type 4 pontoon two slab pours in QSW and QNW were held up. WSDOT reviewing SL 241 price proposal.
97	191	RFI 482 Type 4/4A Column Sleeve Conflict	482, 739		SL 231		WSDOT determined that the conflict resolution is this RFI was acceptable. KG's review indicates that a Change Order is needed to address cost impacts associated with resolving this conflict.
100	180	RFI 484 - Type 1 pontoon W102 bar conflict - Cycle 2		SL161, 174 5/16/13	SL 225 & 230 4/1/13		W102 bar was adjusted from original location 4" due to conflicts with other rebar. WSDOT provided to solutions, KG could either adjust bar as placed or place additional bar as they determined the field adjustments were unacceptable.
101	140	RFI 483, 496 - Keel slab rebar spacing in Type 5, Type 4/4A, and 1/1A due to conflicts	483, 496, 572, 810			WSDOT emails on 9/13/12 & 9/14/12, Draft Change Order 10/23/13	Keel slab rebar spacing exceeded 18". WSDOT proposed a solution to address this issue, KG could cut off the hook bars coming out of bottom of precast panel to allow the rebar mat to be adjusted and provide the correct spacing. Added Type 5, RFI 810 to this issue.

C-7826 - SR 520 Pontoon Construction Project

Change Order #101 - Cycle Two Pontoons 2013

Attachment "A"

KG PCO #	WSDOT PCI #	PCO DESCRIPTION	RFI	WSDOT LETTERS	KG LETTERS	OTHER DOCS.	ISSUE DETAIL
105		RFI 479 - Adjustment of wall rebar in type 4 pontoons to achieve insert electrical isolation	479, 653				KG is seeking compensation for changes to rebar layout to achieve electrical isolation.
107	143	Type 1/1A C105 Column Rebar	491, 499, 505, 559	SL 135		Email 11/9 - Draft Change Order PCI 143, Email 1/8/13 - Draft CO PCI 161	Response to RFI 491 detailed repairs required at all exterior column locations on all Cycle 2 type 1/1A pontoons due to incorrect placement of C105 bars. RFI 499 approves details to comply with SL 135. RFI 505 clarifies size of C105 bar further for future cycles.
108	168	RFC Drawing Process Changes		SL136 9/27/12			SL from WSDOT says original agreed to process must be revised to better align with Contract requirements. Stop work on cycle 3 precast construction received until stamped RFC drawings submitted. Notice of potential impacts in BTF.
109		Crack Repair in Pontoon Closure Pours	552	SL172 5/9/13,175 6/10/13	SL 234 4/8/13	WSDOT email 6/6/13 & 6/10/13	Per discussions and official correspondence with WSDOT; KG's position is WSDOT responsible for repairs of cracks and WSDOT's position is KG responsible.
111		Cycle 2 Fish Handling Revisions		SL 175 6/3/13	SL 239 4/26/13	WSDOT email on 8/24/12 on Fish Handling Lessons Learned,	KG submitted SL 239 dated 4/26/13. WSDOT responded SL 175 6/3/13; KG is seeking compensation for impacts for added effort to to handled fish in the casting basin during pontoon floatout that was not originally included in the scope of work.
112		RFI 477 - Hawse Pipe Vertical Rebar Splice	477, 532				Splices and couplers not allowed on Hawse pipe vertical rebar not preferred in cycles 3-6. KG is working on price proposal.
118	137	Statistical Acceptance of Material			SL 242 6/3/13	Email	Computer Program used for calculating statistical acceptance of material for the Casting Basin and Cycle 1 Construction Segments does not meet the Contract requirements. O'Neil has indicated that their will be impacts to update the change in the SAMs program.
126	194	Crack Repair Pontoon Exterior Walls	552	SL 127, 172 5/9/13, 175 6/10/13	SL 175, 234 4/8/13		Per discussions with WSDOT; KG's position is WSDOT responsible for repairs of cracks and WSDOT's position is KG responsible.
129	125	RFI 407 - 90 Degree Tails Cycle 1 Type 1	407, 549	SL 151			D106/D103/K102 - Details are vague as to configuration of rebar. Top and bottom longitudinal rebar did not have 90 degree tail in some Cycle 1 pontoon locations. Gerdau may have potential impacts. PCO to remain open until joining of Pontoons to determine if there are further impacts.
130		DBE Participation on Change Order Work		SL 152	SL 200		There has been mixed communication on how change orders will affect the DBE goal. There was discussion that the DBE goal of 6% was a fixed number determined on the original contract amount. However, WSDOT SL 152 states that the DBE goal increases with the Contract Price. KG to continually assess and include DBE risk in CO moving forward.
133	194	Crack Repair Pontoon Keel Slab	552	SL172 5/9/13, 175 6/10/13	SL 234 4/8/13		Per discussions and official correspondence with WSDOT; KG's position is WSDOT responsible for repairs of cracks and WSDOT's position is KG responsible. Per KG SL 234 Keel Slab Crack repair began with Cycle 2 and was not experienced in Cycle 1.
137		Precast Tail Cutting for PT Duct and Rebar Conflicts - Type 3	527, 566				KG is pricing impact for cutting of hooks to resolve rebar conflict
138	154	Repair void on Pontoon V Keel slab at FBL project	573, 578, 701, 745	SL 0147 & 148			Ongoing underwater inspection done on Lake Washington have identified voids on bottom side of V pontoon per WSDOT SL 147. KG to investigate cause of voids.
143	121	Pontoon U Hawse Pipe Inserts	402			WSDOT Email 11/12/12 - Draft CO	Electrical isolation issues with the hawse pipe inserts in Pontoon U.
145	87	RFI 577 - Top Deck PT Conflicts - Cycle 2-6	577			Draft CO 11/21/12	PT Duct adjusted Cycle 2-6 due to conflicts with embeds. KG to price impacts.
148	159	RFI 589 - Additional Bar to Sweep Ballast Ports	380, 589, & 603		SL 249 (6/14/13)		Additional bar was required between ballast ports on the Type 1, 3, and 4 pontoons for cycles 2-6. Proposal was submitted in SL 249 on 6/13/13.
151	183	Materials Approval Engineer		SL158 2/15/13	SL 227, 243 6/3/13	Email to WSDOT	WSDOT clarified that KG is to provide the individual (licensed Professional Engineer) necessary to perform the duties of the Materials Approval Engineer on the contract. KG views this as a change to the Contract has submitted a ROM for this issue and will submit a CBCP. WSDOT does not agree and views this within the intent.

C-7826 - SR 520 Pontoon Construction Project

Change Order #101 - Cycle Two Pontoons 2013

Attachment "A"

KG PCO #	WSDOT PCI #	PCO DESCRIPTION	RFI	WSDOT LETTERS	KG LETTERS	OTHER DOCS.	ISSUE DETAIL
155	165	Top Deck Insert Isolation Conflicts	583, 600 & 692			Email 1/8/13, DRAFT CO 1/31/13	Gerdau has notified KG that it is not their contractual responsibility to clear rebar for electrical isolations of inserts and embeds. General Note #6 on M11 drawing G1 states that rebar may be cleared for bolt sleeves and/or blockouts. However, the Technical Requirements require exposed embedments and their anchor bolts to be electrically isolated from reinforcing steel and all prestressing hardware by at least 1-1/2 inches.
169	151	Pontoon Rebar Moves for Electrical Isolation				Email from Gerdau to KG	Rebar was adjusted to achieve electrical isolation. Adjustment of rebar is not addressed by contract, but for blockouts and bolt sleeves. KG to price impacts.
190	164	RFI 598 - Using Shims for Isolation Issues	598, 610, 617			Email 1/8/13, DRAFT CO 1/31/13	Isolation of Saddle Blocks require plastic shims to achieve electrical isolation. This is a conflict between rebar and embeded items. KG is pricing impact.
196		RFI 619 - C205 #5 Fillet Bar/CJ Conflict Type 3 at 1L/5-9T	619		SL 246 6/13/13	DRAFT CO 6/24/13.	Price proposal for conflict sent to WSDOT in SL 246 6/13/13.
197	38	FB&L Work Agreement - Towing Bollards				WA 003, 013, & 039	FB&L Design Builder requested change to add bollards and padeyes and to modify the location of some of the M11 mooring bollards for use in towing.
200		Cylinder End Grinder - Honing Machine					O'Neill gave KG notice that cylinders are breaking much higher than contract indicates. O'Neill had to procure an end grinder to properly break pontoon cylinders. O'Neill's position is that this is a change to the contract and KG to pursue on behalf of subcontractor.
204		RFI 613 - M11 Clarification of 6" Fillet at Columns - SA28	613		SL 245 6/13/13		KG's position is that extending the fillet around the top of the column in plan sheet SA28 to eliminate clearance issue in Type 4's was additional work. Price proposal SL 245 was provided 6/13/13.
206		A244 #9 Cable Track Bars in Type 3 and Type 1/1A Pontoons	565 & 634				KG is seeking compensation for the adjustment of the A244 # 9 cable track bars to allow for 3" cover Type 1's & 3
209	172	RFI 622 - Moorage Cleat Insert - Rebar Congestion Type 4/4A	622				WSDOT has indicated that this will be a no cost change to allow a tolerance of +/-2' in the placement of the moorage cleats. Tracked in PCO, evaluating cost impacts.
210		RFI 655 - Thinning Bar Tail Groups on A Pontoon Top Deck	655				There are groups of vertical bars in the precast panels that conflict with the spacing/placement of top mat bars in Pnt A as a result of pick points, doorways, and FRP inserts. KG is pricing impact to thin the tail groups.
211	177	RFI 659 - Type 3 - F204 #5 Interior Fillet Bar Conflict	659 & 624			draft CO 97	Conflict with the F204 #5 Fillet bars and the PT duct at 2L & 3L, Received draft 5/7/13. Red'd CO on 5/24. KG reviewing CO.
213	184	Remove Concrete Cover On "A" Pontoon w/o Voids	725	SL 164	SL 248 6/13/13		This is work related to WSDOT's direction to demo the fillets, chase voids, and repair the work in A pontoon. KG submit pricing proposal SL 248 on 6/13/13.
219		Cycle 1 Escalation		CO 85			Cycle One Pontoons 2012 Change Order excluded escalation cost for labor, equipment, and materials associated with the time extension granted within Change Order 85.
221		Dredging of Launch Channel					KG is seeking compensation for additional dredging for added silt build up during delays. Tied to cycle 1 & 2 delays and discussed with WSDOT's claim negotiation team.
222	193	Cycle 2 - Basin Fender Extension	705		SL 236, SL 247 6/12/13		The Cycle 2 transverse PT blisters extend 1'0" from the face of the pontoon. During float out operations, when the pontoon first contacts the fender there will be 7" of clear space between the retrofit blister of the pontoon and the basin perimeter wall, which leaves potential for the pontoon to contact the basin wall. Price proposal SL 247 6/12/13.
223		Fall Protection Change from 6' to 4'					The WAC has reduce the fall protection requirements from 6'-0" to 4'-0". This is per WISHA. KG is monitoring for impacts
225	184	Remove Concrete Cover On "A" Pontoon w/ Voids	725	SL 164	SL 250 6/14/13	BTF 4/3/13	This PCO stems from PCO 213 to track work related to removing the concrete cover from A pontoon where voids were discovered. WSDOT asked KG to separate in BTF 4/3/13. KG has determined that unconsolidated concrete is a result of rebar congestion and there is justification for entitlement. WSDOT does not agree.
227	192	Cycle 2 - Broken Strands during Stressing	754, 758				During stressing of R pontoon tendon ID 24 had 1ea strand break. Another 1ea strand broke during stressing on S pontoon tendon ID 14. Both tendon forces were found to be within acceptable range, however due to strand breakage being a rare occurrence in industry this PCO was created. WSDOT Closed PCI 227, they believe no CO required to accept broken strands.

C-7826 - SR 520 Pontoon Construction Project

Change Order #101 - Cycle Two Pontoons 2013

Attachment "A"

KG PCO #	WSDOT PCI #	PCO DESCRIPTION	RFI	WSDOT LETTERS	KG LETTERS	OTHER DOCS.	ISSUE DETAIL
228		Cycle 2 - Leak Repair					Hey'di Powder X is being applied on interior walls adjacent to temporary ballast cells and on exterior CJ's that have previously been waterproofed. KG is pricing impacts.
229	197	Inspection & Repairs During Pontoon Float-Out	749	CO 96			No Cost/No Time CO to clarify interpretation of performing crack repairs after pontoons are removed from the casting basin.
230		Two Coat Field Painting of Anchor Cable Tracks				Email 5/2/13	Email on 5/2/13 to proceed with two field coats. WSDOT indicated this is work as required by Contract. KG does not agree and views this as added work.
231	199	Minor Underwater Repairs - Technical Language	752, 449, 474				No Cost/No Time CO to add technical language allowing minor underwater repairs in the wet with WSDOT approval
232	181	Corrugated Pipe Inserts for Bollard anchor bolts	625, 631				No Cost/No Time CO to allow 4" corrugated steel pipe inserts rather than plastic for Bollard anchor bolt sleeves
236	188	Cycle 1 & 2 - Temp Access Door Pourback Sequence	712				No Cost/No time CO to document the pourback sequence of interior and exterior doors in Cycle 1 & 2.
238	201	SSP Column Connection Mod					CO to clarify the column connection modifications. Provides which SSP connections require column modifications.
239	41	LP HR Column Connections					WSDOT tracking PCI 41 for modifying highrise column connections.
240	196	Grout Tube Voids Pontoon A & Q	800				Grout Tube voids and resolution of RFI 800 may require CO to accept repair work. PCO is holding place if CO is necessary.

DESIGN-BUILD CHANGE ORDER CHECKLIST

Cont. #: 007826	Cont. Title: SR 520 Pontoon Construction Project		Approval from State Construction Office Required
C.O. #: 101	C.O. Title: Cat. A & B - Cycle Two Pontoons 2013		
☒ Design-Builder initated.	☒ Agency initated.		

I. Executed by the State Construction Office			
1. Cost or credit equal to or exceeding $500,000.*1	☒ Yes	☐ No	X
2. Change in the contract documents beyond the scope, intent or termini of the original contract.*2	☐ Yes	☒ No	X
3. Change in the condition of award.	☐ Yes	☒ No	X
4. Change in contract time greater than 30 working days.	☒ Yes	☐ No	X
II. Executed by the Region			
5. Cost or credit greater than $100,000 but less than $500,000.*1	☐ Yes	☒ No	
6. Change in contract time greater than 10 and less than or equal to 30 working days, must be related to changes implemented by change order.	☐ Yes	☒ No	
III. Executed by the Project Engineer			
7. Determination of impacts and/or overhead.	☐ Yes	☒ No	X
8. Design or construction work that does not comply with the Mandatory Standards.	☐ Yes	☒ No	X
9. A change to a Chapter 1 General Provision.	☒ Yes	☐ No	X
10. A change to a technical requirement in any of the following sections: Design Deviations, Geotechnical Design, Pavement, Project Documentation, Bridges and Structures, Control of Materials, MWBE Goals, QMP Requirements, or WSDOT Standard Specifications.	☒ Yes	☐ No	X
11. Determination of changed condition (Section 1-04.7 of the Request For Proposal).	☐ Yes	☒ No	X
12. Settlement of a claim (Section 1-09.11(2) of the Request For Proposal).	☐ Yes	☒ No	X
13. Repair of damage regarding "acts of God" or "acts of the public enemy or of government authorities (Section 1-07.13 of the Request For Proposal).	☐ Yes	☒ No	X
14. A "no-cost" change based upon a determination of "equal or better".	☐ Yes	☒ No	X

Approvals obtained:

Project Engineer:	(*REQUIRED*)	Tom Baker	Date:	07/11/2013
Region:	(*REQUIRED*)	Julie Meredith	Date:	07/17/0213
State Construction Office:		Jeff Carpenter	Date:	07/17/2013

To be completed by the Project Engineer :

CO Reason(s) (See CCIS Source/Outcome) : PM, CS, DO

Change Order Prepared By: Jon Danks Date: 07/09/2013

Has change been entered as lesson learned? ☐ Yes ☒ No ☐ N/A

Has design documentation been updated? ☒ Yes ☐ No ☐ N/A

Is change approved by program management? ☒ Yes ☐ No ☐ N/A

To be completed by the Region :

Is the change eligible for Federal participation? ☒ Yes ☐ No ☐ N/A

Change Order Reviewed by: Tom Baker Date: 07/11/2013

This form represents the <u>minimum</u> information required by the State Construction Office. *3

*1 Cost or Credit greater than $200,000 on Federal Stewardship requires FHWA approval (see Construction Manual - Ch.1-2.4C(3) and Ch. 1-3.4)

*2 Per RCW 47.28.050, any change beyond $7,500 that is beyond the original scope shall go through the competitive bidding process.

*3 Changes that do not meet any of the itemized criteria above may be executed by the PE with Region approval.

DESIGN-BUILD CHANGE ORDER CHECKLIST

SR 520 Corridor Program: Design-Build Change Order Page 2 - Checklist Supplement

Cont. #: 007826

C.O. #: 101

To be completed by the Business Manager:

Does this change order require coordination with other SR 520 Projects / Program Areas? ☒ Yes ☐ No

Coordination has taken place with:

Contract Project (identify your project): Pontoon

Pontoon	☐ Yes ☐ No ☒ N/A	Name:		Date:
Pontoon Mitigation	☐ Yes ☒ No ☐ N/A	Name:		Date:
Pontoon Moorage	☐ Yes ☒ No ☐ N/A	Name:		Date:
Eastside HOV	☐ Yes ☒ No ☐ N/A	Name:		Date:
FB&L	☒ Yes ☐ No ☐ N/A	Name:	Julie Mizuhata / Dave Becher	Date: various
Seattle Side	☐ Yes ☒ No ☐ N/A	Name:		Date:

Concurrence at Project Change Review Committee (PCRC) Meeting: ☒ Yes ☐ No ☐ N/A Date: various

Reason: Cost of change is $200,000 or more: ☒ Yes ☐ No and/or Interface Issue: ☐ Yes ☐ No or Other Issue: ☐ Yes ☐ No

Brief explanation if "No Concurrence" or "Other Issue":

Identified risk has been entered into the SR 520 Risk Management Database: ☐ Yes ☐ No ☒ N/A

Risk ID Number (if pending, identify as Pending):

Project Risk ID No.:

Project Risk ID No.:

Project Risk ID No.:

To be coordinated with Program Finance, Budget and Controls Group:

Is Sales Tax Included in CO Cost? ☐ Yes ☒ No Is sales tax deferred? ☒ Yes ☐ No

Funding incl. Max Payment Curve Changes discussed with: Date:

Third Party Agreements discussed with: Date:

Coordination with Others:

Design / Technical Lead:	Name:	HQ Construction /Jeff Carpenter	Date: various
Maintenance:	Name:		Date:
Environmental Commitments:	Name:		Date:

Estimate for PT Delay for Cycle 2

Ref	Description	MH	Direct Eqpt Rent	Direct ST&S	Direct Labor	KG Extras	Perm Mat'l	Sub	Total
	KG (Eqpt, ST&S, Labor)								
1.1	PT design fix	10,083	$ 5,326	$ 57,711	$ 603,683			$ -	$ 666,720
1.2	End wall decoupling	5,096		$ 54,282	$ 299,314		$ 12,754		$ 366,350
1.3	Mod PT & bolt sleeve blockout	14		$ 66	$ 824				$ 890
1.4	37' Added CJ's	2,863		$ 12,870	$ 156,001				$ 168,871
1.5	Modify external doors							no entitlement	$ -
1.6	PT change admin staff			$ 22,505					$ 22,505
1.7	Added QC & engineering staff							included in TRO	$ -
1.8	PT blocked duct							included in TRO	$ -
1.9	Expert consultant review			$ 59,631					$ 59,631
1.1	NCM							$ 579,964	$ 579,964
1.11	Added MEKO							$ 40,887	$ 40,887
1.12	Jesse material storage						$ 32,719		$ 32,719
1.13	Fibergrate material storage						$ 15,000		$ 15,000
1.14	Transverse PT	13,818	$ 40,085	$ 229,730	$ 811,736		$ 23,202	$ 7,585	$ 1,112,338
1.15	Added channel dredging							deferred	$ -
1.16	Added floatout effort			$ 22,820					$ 22,820
1.17	Unforseen pontoon repairs								$ -
2.1	Effected MH's (incl ST&S)				$2,191,162				$ 2,191,162
3.1	Time Related Overhead (131 CD)					$ 6,105,779			$ 6,105,779
3.2	Added time related eqpt operation (131 CD)				$1,136,297				$ 1,136,297
3.3	Cal Portland						$ 254,664		$ 254,664
3.4	O'Neill Environmental			$ 485,552					$ 485,552
3.5	Lorache			$ 47,595					$ 47,595
3.6	O'Bunco			$ 206,298					$ 206,298
4	Gerdau (PCS)							$ 3,125,000	$ 3,125,000
5	SDI (Avar)							$ 1,425,000	$ 1,425,000
	Subtotal directs	31,874	$ 45,411	$ 1,199,060	$5,199,017	$ 6,105,779	$ 338,339	$ 5,178,436	$ 18,066,042
	Markups	%							
	Bonds insurance & taxes	3.23%	same as 2.6% of grand total						$ 583,533
		SUBTOTAL							$ 18,649,575
	G&A General Company OH	7.54%							$ 1,406,178
		SUBTOTAL							$ 20,055,753
	Margin on ALL costs	12.0%							$ 2,406,690
									$ 22,462,443

Attachment B
C-7826, Change Order No. 101
Page 1 of 10

Ref	Description	
1.1	PT design fix	Reviewed MH's collected by KG's cost reporting system as well as KG daily reports and MH's claimed appear reasonable. Reviewed materials and equpment information collected by KG cost reporting system and costs appear reasonable.
1.2	End wall decoupling	Reviewed MH's collected by KG's cost reporting system as well as KG daily reports and MH's claimed appear reasonable. Reviewed materials and equpment information collected by KG cost reporting system and costs appear reasonable.
1.3	Mod PT & bolt sleeve blockout	Reviewed MH's collected by KG's cost reporting system as well as KG daily reports and MH's claimed appear reasonable. Reviewed materials and equpment information collected by KG cost reporting system and costs appear reasonable.
1.4	37' Added CJ's	Reviewed MH's collected by KG's cost reporting system as well as KG daily reports and MH's claimed appear reasonable. Reviewed materials and equpment information collected by KG cost reporting system and costs appear reasonable.
1.5	Modify external doors	No entitlement
1.6	PT change admin staff	KG personnel included in TRO. Remaining cost is for admin asst from Express Employment and misc supplies
1.7	Added QC & engineering staff	Included in TRO
1.8	PT blocked duct	No entitlement
1.9	Expert consultant review	CTL (thermal control designer) performed design check and site visit due to change in wall and slab pour lengths caused by PT revisions resulting in $25,611 of additional costs. KECo performed pontoon shortening calculation, designed falsework for pontoon 3 and designed formwork to accomodate decoupling in pontoon A resulting in $27,285 of additional costs. VAK performed engineering for temp structures ($950). Buckland & Taylor evaluated design changes made by WSDOT for KG resulting in $5,785 of additional costs
1.10	NCM	Nuprecon performed concrete demolition and coring necessitated by the addition of transverse PT. Work was performed T&M and rates appear reasonable. Documentation supportedclaimed work scope and associated costs. Work performed by Nuprecon associated with pontoon A unconsolidated concrete is not included in this item
1.11	Added MEKO	WSDOT changes resulted in standby/inefficiencies to MEKO conc pumping. KG issued a subcontract revision for $3.50 per CY for work performed in cycle 2 and the $3.50 per CY appears reasonable for the impact. This affected 11,682 CY's of concrete poured after Oct 20, 2012 and resulted in $40,877 of damages
1.12	Jesse material storage	The 54 days of cycle 1 and 131 days of cycle 2 delays resulted in additional storage costs for Jesse's (KG's misc metal supplier). The storage rates requested by Jesse are reasonable. WSDOT's cycle 1 impacts on Jesse had been deferred and are included in this settlement

1.13	Fibergrate material storage	The 54 days of cycle 1 and 131 days of cycle 2 delays resulted in additional resequencing/storage/handling costs for Fibergrate (KG's walkway supplier). The impact costs requested by Fibergrate appeared overstated and adjustments were made. WSDOT's cycle 1 impacts on Fibergrate had been defered and are included in this settlement
1.14	Transverse PT	Reviewed MH's collected by KG's cost reporting system as well as KG daily reports and MH's claimed appear reasonable. Tracked hours are consistent with KG daily reports and work scope. Reviewed materials and equpment information collected by KG cost reporting system and costs appear reasonable.
1.15	Added channel dredging	Deferred evaluation to cycle 3-6
1.16	Added floatout effort	KG used 1 additional small tug to move pontoons in cycle 2 due to blister added by the transverse PT. KG requested $22,820 for this item and it appears reasonable
1.17	Unforseen pontoon repairs	No entitlement
2.1	Effected MH's (incl ST&S)	As a result of WSDOT changes and their timing, KG should be entitled to impacts to their cycle 2 productivity. KG's methodology (not actually measured mile as claimed by KG) is reasonable for determining impact and subsequent damages. Reviewed MH's collected by KG's cost reporting system for both cycle 1 and cycle 2 and confirmed information in item 2.1. Reviewed historical information for Murrow and Third Lake projects in KG offices and confirmed it matched item 2.1 info. KG's claim that they would have anticipated a 41%+ improvement from cycle 1 to 2 is unreasonable, however we believe it would be reasonable to anticipate 30-35% improvement from cycle 1 to cycle 2 based upon KG's experience/information. Using an anticipated improvement of 37% (mid-point between KG claimed % and our opinion) and taking into consideration the value for proposal item 3.2, a reasonable value for item would be $2,191,162
3.1	Time Related Overhead (131 CD)	KG is entitled to a 131 CD extension and associated time related OH (TRO). Our indedependent estimate for TRO is $46,609 per CD which is $6,105,779 for 131 CD's
3.2	Added time related eqpt operation	KG is entitled to a 131 CD extension and associated impact on KG's expenses associated with crane operators and daily cleanup. Our independent estimate for the additional crane operator expense is $958,680 and our estimate for added cleanup expense is $177,617 for a grand total of $1,136,297 for the 131 calendar day delay
3.3	Cal Portland	CalPortland was required to leave their batchplant onsite during the 131 CD delay and is entitled to the standby costs associated with the delay. CalPortland's request for $59,292 per mo of standby is reasonable since our independent estimate indicated $59,834 per CD would be a reasonable monthly standby cost
3.4	O'Neill Environmental	O'Neill Environmental was required to be onsite during the 131 CD delay and is entitled to the impact costs associated with the delay. The average cost per calendar day for O'Neill from Aug 1, 2012 to Feb 28, 2013 was $3,707 per calendar day based upon their monthly invoices during this time frame. The $3,707 value per calendar day appears reasonable and resulted in $485,552 of damages when multiplied by the 131 calendar day delay.

3.5	Lorache	Lorache CAD Services was required to be onsite during the 131 CD delay and is entitled to the impact costs associated with the delay. The average cost per calendar day for Lorache from July 24, 2012 to Feb 12, 2013 was $363 per calendar day based upon their invoices during this time frame. The $363 value per calendar day appears reasonable and resulted in $47,595 of damages when multiplied by the 131 calendar day delay.
3.6	O'Bunco	O'Bunco Survey was required to be onsite during most of the 131 CD delay and KG is entitled to impact costs associated with the delay (KG self performed the survey after Feb 20, 2013 and would have incurred similar costs to O'Bunco for the balance of the delay days). The average cost per calendar day for O'Bunco from Aug 21, 2012 to Feb 20, 2013 was $1,575 per calendar day based upon their invoices during this time frame. The $1,575 value per calendar day appears reasonable and resulted in $206,298 of damages when multiplied by the 131 calendar day delay.
4	Gerdau (PCS)	Value per WSDOT negotiation with Gerdau
5	SDI (Avar)	Value per WSDOT negotiation with SDI
	Bonds insurance & taxes	Calculated at 2.6% of grand total which is 3.23% of directs. Agreed upon rate is reasonable
	G&A General Company OH	Calculated at audited rate of 7.54%
	Margin on ALL costs	Calculated at 12% which is reasonable rate considering KG bid rate was 14% and contract specs allow up to a 29% overall markup on labor and 21% on permanent material. KG's overall markup percentage is 12% fee plus 7.54% G&A plus 3.23% bonds/insurance or a total of 24.3% (when compounding is considered)

Attachment B
C-7826, Change Order No. 101
Page 4 of 10

Item 2.1 Effected MH's Production Loss

	MH's	CY	MH/CY
cycle 1	203,639	16,828	12.10
41.66% improvement anticipated by KG			5.04
KG anticipated production after improvement			7.06
cycle 2 CY			x 17,006
expected cycle 2 MH's IF 41.66% improvement			120,060
actual cycle 2 MH's			182,125
MH loss in cycle 2 due to not making 42% improvement in production			62,065
hrly rate			x $57.57
			$ 3,573,103
ST&S @ 8%			$ 285,848
			$ 3,858,951
item 3.2 eqpt operation overrun			$(1,658,184)
productivity loss suffered due to not achieving 41.66% improvement			$ 2,200,767

info per KG fig 22 item 2.1

	MH/CY	
	12.10	
	4.54	37.50 % improvement
anticipated production	7.56	
cycle 2 CY	x 17,006	
expected cycle 2 MH's IF 37.33% improvement	128,608	
actual cycle 2 MH's	182,125	
MH loss in cycle 2 due to not making 37% improvement in production	53,517	
hrly rate	x $57.57	
	$ 3,080,981	
ST&S @ 8%	$ 246,478	
	$ 3,327,459	
item 3.2 eqpt operation overrun	$(1,136,297)	
productivity loss suffered due to not achieving 36.33% improvement	$ 2,191,162	impact

KG TRO per Change Request Cycle 2

TRO Item	KG cycle 2 rate	Estimated	Comment
Skip box	$ 144	$ 144	
Temp power	$ 307	$ 307	
Formwork / Hardware	$ 20,382	$ 2,531	
City/Harbor Lease	$ 145	$ 145	
Trestle	$ 3,494	$ -	No additional cost
TESC - BMP's	$ 658	$ 497	
Stair tower	$ 21	$ 21	
Connex	$ 535	$ 535	
PC tents	$ 115	$ 115	
Crane mats	$ 918	$ -	No additional cost
Pond PH treatment	$ 88	$ 88	
Access lighting	$ 675	$ 675	
Storm water treatment	$ 58	$ 58	
Supervision	$ 18,419	$ 18,419	
Equipment	$ 19,476	$ 19,476	
Outside rent & services	$ 1,197	$ 1,197	
Overhead	$ 2,401	$ 2,401	
Consulting (MOVED to Directs)	$ 7,754	$ -	Paid as direct cost
KG TRO Daily Rate for cycle 2	**$ 76,787**	**$ 46,609**	Cycle 2 impact Change Order for $22,462,443 includes 131 calendar days at $46,609 per calendar day

Attachment B
C-7826, Change Order No. 101
Page 6 of 10

Commentary for Cycle 2 TRO Values

Item	Comment
Skip box	Estimated KG would need to perform 1 MH of repairs on each of the 75 skip boxes per month. In addition to the $65 of labor for the 1 MH we also estimate KG would use $10 of materials totaling $75 per box multiplied by 75 boxes and divided by 30.5 calendar days per month or $184 per calendar day. KG requested $144 per calendar day which is reasonable
Temp power	KG's estimated cost for maintenance of the temp electrical system appears reasonable. This is not temporary power
Formwork	Estimated the time impact on the formwork based upon additional form maintenance required due to the forms being exposed to the weather and day to day damage for the extended duration. Estimated 1 man per pontoon per work day and used a 9 hr work day. This would be $71K for labor per month plus $6K for materials per month divided by 30.5 calendar days per month or $2,531 per calendar day
Harbor lease	The KG value appears reasonable and consistent with the documentation provided
Trestle	No additional cost
TESC-BMP's	Estimated KG used 2 men for 6 hours each work day to maintain their TESC work plus materials at $25 per work day
Stair tower	KG cycle 1 rate was reasonable and KG has requested only 28% of what they requested in cycle 1, therefore the cycle 2 daily rate is reasonable. Cycle 1 & 2 used the same quantity of stair towers
Connex	KG cycle 1 rate was reasonable and KG has requested only 71% of what they requested in cycle 1, therefore the cycle 2 daily rate is reasonable. Cycle 1 & 2 used the same quantity of connex containers
Precast tents	KG's estimated cost for maintenance of the precast protection tents appears reasonable
Crane mats	No additional cost
Pond treatment	KG's estimated cost for maintenance of the holding ponds appears reasonable
Access light	KG's estimated cost for maintenance of the pontoon access lighting appears reasonable
Stormwater treatment	KG's estimated cost for maintenance of the stormwater treatment system appears reasonable
Supervision	KG's cost for supervision appears reasonable when compared against our independent estimate which was over 10% higher than the KG actuals
Equipment	KG's cost for equipment appears reasonable when compared against our independent estimate which was only 2% lower than the KG estimate
Outside rent & services	KG's cost for outside rent and services appears reasonable
Overhead	KG's cost for jobsite overhead items appears reasonable
Consulting	Payment for costs associated with this item are included in direct cost items 3.4, 3.5 and 3.6

KG Item 3.2 Cleanup plus Additional Crane Operator Expense

unreimbursed cycle 2 operator hours	$476,710		see pg 2 for detail
unreimbursed cycle 2 oiler/bellman hours	$403,370		see pg 2 for detail
operator foreman 131 CD	$ 78,600		see pg 2 for detail
		$ 958,680	subtotal for operators
Additional cleanup labor due to 131 CD delay		$ 177,617	see pg 3 for detail
KG item 1.13 impact for TRO facility operation		**$ 1,136,297**	

Attachment B
C-7826, Change Order No. 101
Page 8 of 10

Item 3.2 Time Related Eqpt Operation (OPERATORS ONLY)

Cycle 2 duration July 29 to Dec 19, 2012 per KG approved JULYREV schedule was 143 cal days or 20.43 wks

KG planned to work in cycle 2

day shift	58 hrs	M-F work 10 hr shift and Sat work 8 hrs
night shift	40 hrs	M-F work 8 hr shift. NO Saturday
	98 hrs	per week
	x 20.43 wks	
	2,002	operator hrs per pc of eqpt

tower cranes	4 ea x 2,002 hrs per crane	8,008	
crawlers	3 ea x 2,002 hrs per crane	6,006	assumes 2 Liebherrs & part time for American and Vicon
	PLANNED hrs for cycle 2 crane operators	14,014	
	assume use 5 of 7 cranes on average	x 71%	5/7 is 71%
		10,010	

tower cranes	ACTUAL	11,937
crawlers	ACTUAL	8,094
		20,031

crane operator hrs included in Cycle 2 Item 1.1	1,321
crane operator hrs included in Cycle 2 Item 1.2	199
crane operator hrs included in Cycle 2 Item 1.4	3
crane operator hrs included in Cycle 2 Item 1.14	1,164
Operator hours claimed elsewhere	2,687

PLANNED hrs for cycle 2 crane operators	10,010
ACTUAL hrs for cycle 2 crane operators	20,031
Operator hours claimed elsewhere	2,687
Shortfall operator hrs	-7,334

	hrs	rate	
unreimbursed cycle 2 operator hours	7,334	$65	$ 476,710
unreimbursed cycle 2 oiler/bellman hours	7,334	$55	$ 403,370
operator foreman (131 CD ÷ 7 days x 6 WD x 10 hrs)	1,123	$70	$ 78,600
			$ 958,680

Item 3.2 Cleanup Labor Portion Only

Cycle 2 days of delay was 131 cal days or 18.71 weeks

KG cleanup crew for added duration

day shift	40 hrs	M-F work 8 hr shift and NO Saturday
night shift	0	
	40 hrs	per week
	x 18.71 wks	
	748	MH's
	x 4 men	
	2,994	added hrs of cleanup labor plus foreman

Cleanup laborers	2,994 hrs @ $47/MH	$140,718
Cleanup foreman	748 hrs @ $49.33/MH	$ 36,899
Additional cleanup labor due to 131 CD delay		**$177,617**

Attachment B
C-7826, Change Order No. 101
Page 10 of 10

Pontoon Schedule Comparison Summary
Attachment C Cycle 2 Delay Analysis

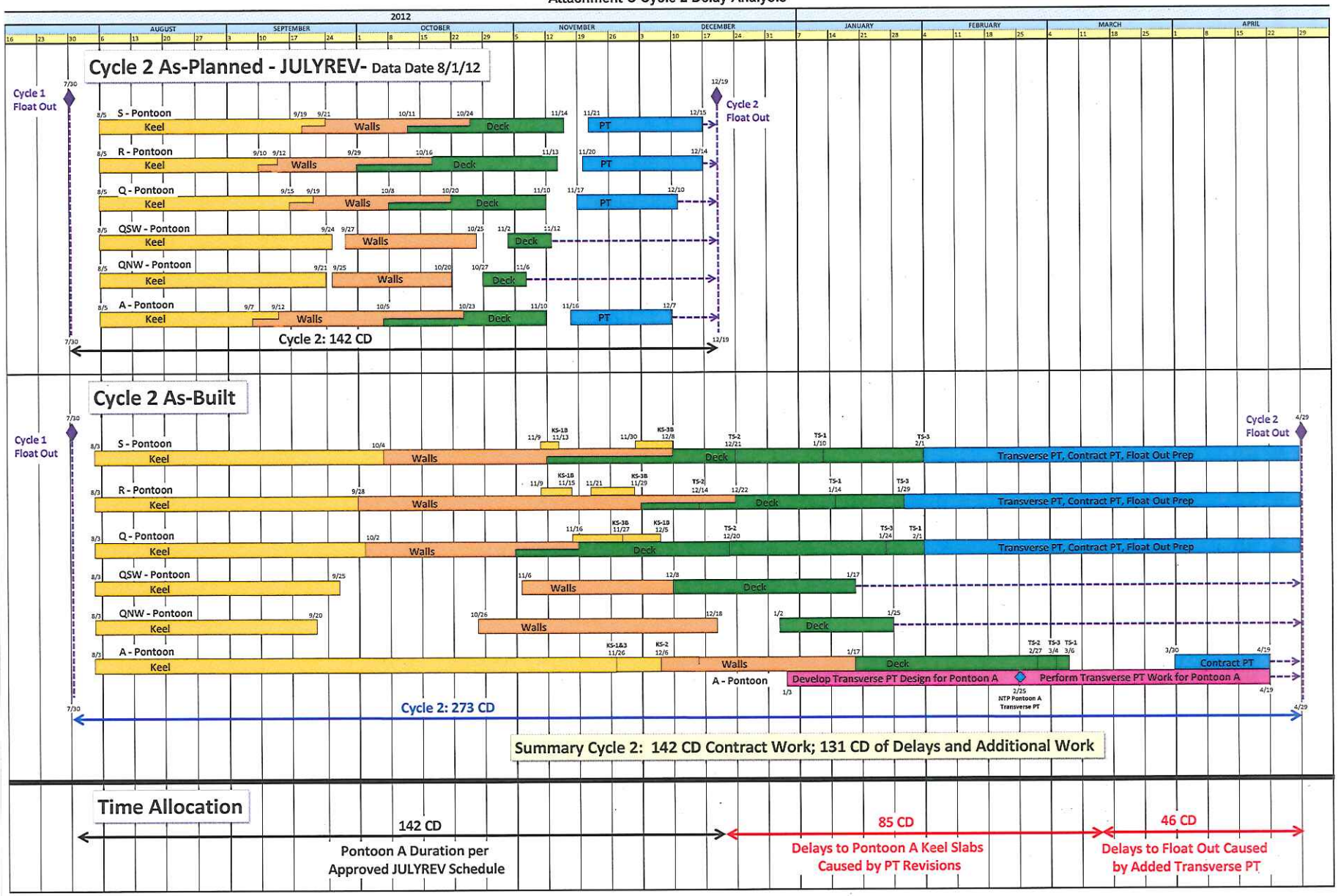

Attachment C
C-7826, Change Order No. 101
Page 1 of 1