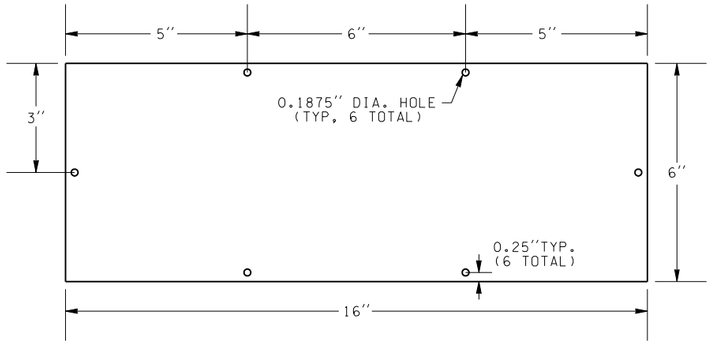

TEMPORARY ACCESS COVER
12 GUAGE STEEL

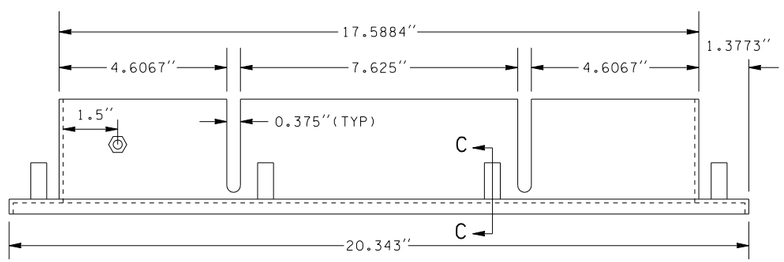

ADJUSTABLE FACE
PLAN VIEW

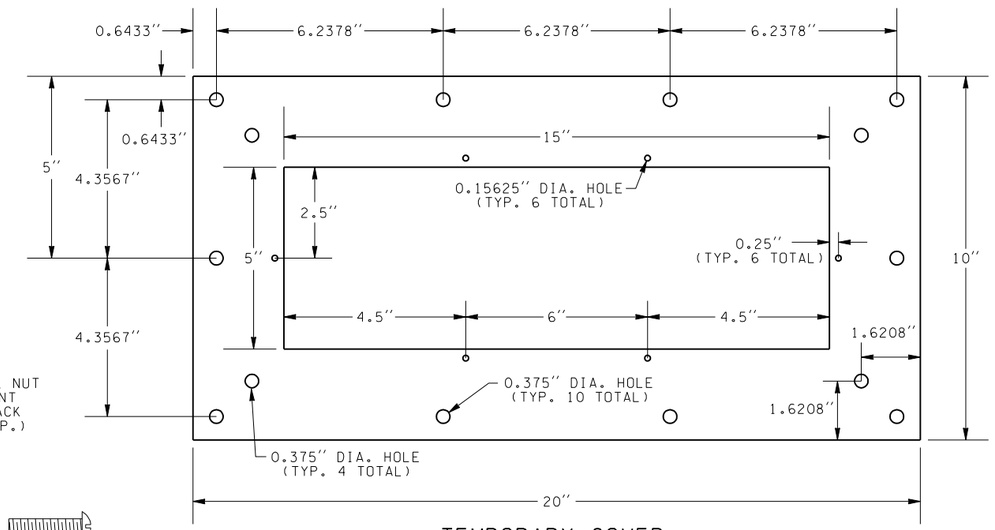

TEMPORARY COVER
12 GUAGE STEEL

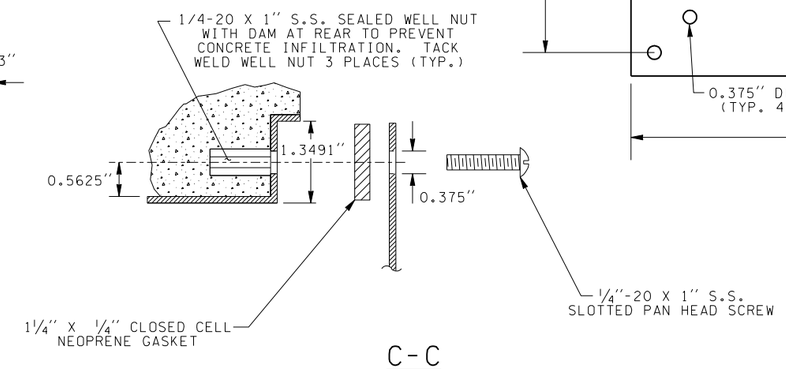

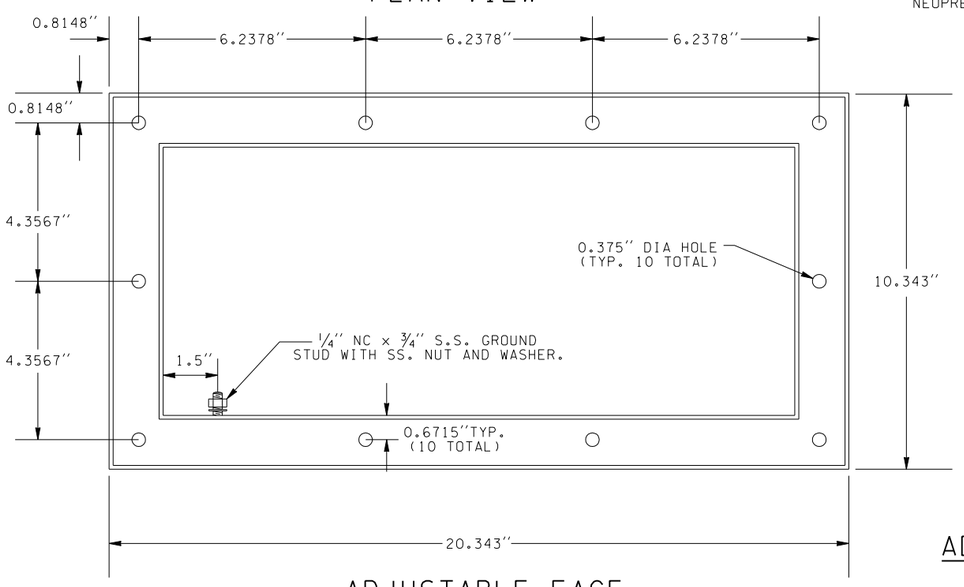

ADJUSTABLE FACE
PROFILE VIEW

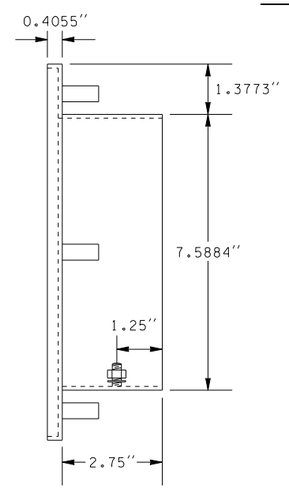

ADJUSTABLE FACE
SIDE VIEW

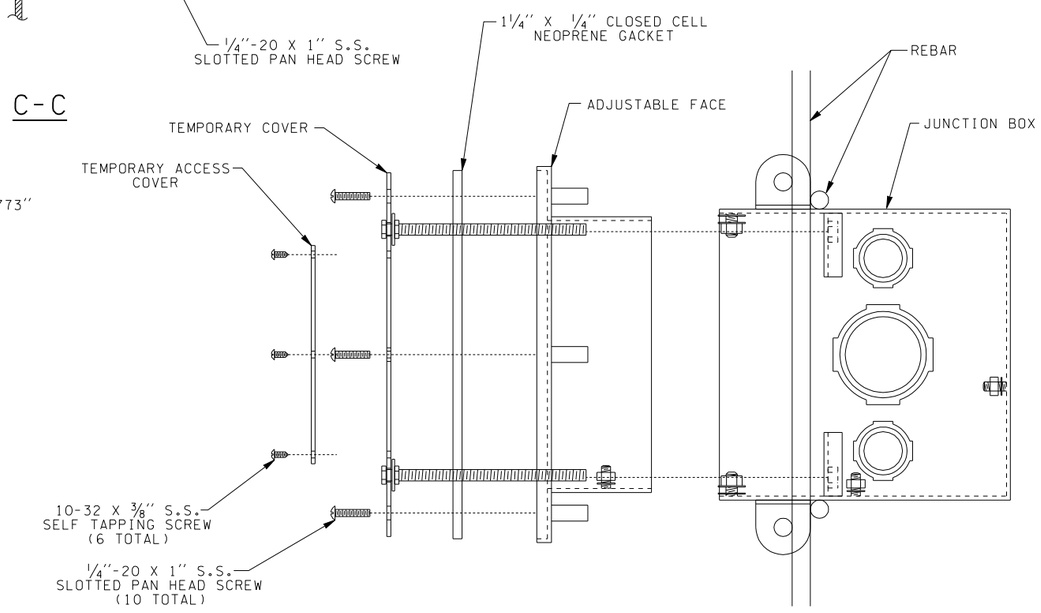

NEMA 3R ADJUSTABLE FLUSH MOUNT JUNCTION BOX

TYPE 304 STAINLESS STEEL, WELDED SEAM CONSTRUCTION
12 GUAGE BOX WITH #2B FINISH
12 GUAGE ADJUSTMENT TABS
12 GUAGE MOUNTING TABS

FILE NAME	S:\414126\Electrical\MASTER_FILES\DETAILS working copies\Adjflsjb.dgn						
TIME	07:22:32 AM				REGION NO. 10	STATE WASH	FED.AID PROJ.NO.
DATE	06/21/2005				JOB NUMBER		
PLOTTED BY	trinhha						
DESIGNED BY							
ENTERED BY							
CHECKED BY					CONTRACT NO.		LOCATION NO.
PROJ. ENGR.			1-24-05				
REGIONAL ADM.		REVISION	DATE	BY			

P.E. STAMP BOX DATE

P.E. STAMP BOX DATE

Washington State
Department of Transportation

ENGLISH

NEMA 3R ADJUSTABLE JUNTION BOX

PLOT2

6.22E

SHEET OF SHEETS