RETROFIT OF SPLIT BRIDGE COLUMNS

Supporting Appendices

WA-RD 482.2

October 2001

Washington State Department of Transportation

Washington State Transportation Commission
Planning and Capital Program Management
in cooperation with:
U.S. DOT - Federal Highway Administration

Research Report – Supporting Appendices

Research Project 9902-26
Split Columns

RETROFIT OF SPLIT BRIDGE COLUMNS

APPENDICES

RETROFIT DESIGN CALCULATIONS

by

David I. McLean	Moein H. El-Aaarag	Paul D. Rogness
Professor	Graduate Student	Graduate Student

Washington State Transportation Center (TRAC)
Department of Civil and Environmental Engineering
Washington State University
Pullman, Washington 99164-2910

Washington State Department of Transportation
Technical Monitor
Hongzhi Zhang
Bridge and Structures Branch Engineer

Prepared for

Washington State Transportation Commission
Department of Transportation
and in cooperation with
U.S. Department of Transportation
Federal Highway Administration

October, 2001

APPENDIX A

FYFE COMPANY RETROFIT DESIGN CALCULATIONS

WSU COLUMN RETROFIT

Equations utilized in following spreadsheet:

Effective column height based on provided moment values and corresponding diagrams.
Plastic hinge length=(0.8)(Effective column height)+0.15(60ksi)(bar diameter).
Ideal yeild curvature is taken from the moment-curvature analysis.
Yield displacement=(ideal yeild curvature)*(effective column height)^2/3.
Neutral axis depth is taken from the moment-curvature analysis.
Mu is taken from the moment-curvature analysis.
Required ultimate curvature =(curvature ductility)(ideal yeild curvature).
Required ultimate compressive strain=(required ultimate curvature)(neutral axis depth)
Required volumetric ratio=0.8(required ultimate compressive strain-0.004)(1.5f'c)/(fu*eu)
fu=ultimate composite stress=60ksi
eu=ultimate composite strain=0.02
Required jacket thickness=0.5(required volumetric ratio)((depth*width)/(depth+width))
Required number of layers for required curvature=required thickness/0.051
Max. Shear is from a 50% overstrength value.

IN-PHASE TRANSVERSE LOADING

width (in.)	depth (in.)	f'c (ksi)	bar dia. (in.)	height (in.)	eff. ht.	hinge length	ductility req	curv duct.	ideal yield curv.	yield displ. (in.)	N/A (in.)	Mu (kip-in.)	req. ult. curv.	req. ult.comp. strain	req. vol. ratio	req. jckt. thick (in.)	*req. # of layers*	max. shear (kip)	req. thick (in.)	*# lrs for shear*
7	13	5	0.375	96	96	10.155	8	24.29	2.38E-04	7.31E-01	1.2	426.6	0.0058	0.0069	0.0136	0.0308	*0.60*	6.6656	0.01494	*0.29*
16	13	5	0.375	96	96	10.155	6	17.636	2.40E-04	7.37E-01	0.8	558.6	0.0042	0.0034	-0.0028	-0.0102	*-0.20*	8.7281	0.019563	*0.38*

OUT OF PHASE LOADING

width (in.)	depth (in.)	f'c (ksi)	bar dia. (in.)	height (in.)	eff. ht.	hinge length	ductility req	curv. duct	ideal yield curv.	yield displ. (in.)	N/A (in.)	Mu (kip-in.)	req. ult. curv.	req. ult.comp. strain	req. vol. ratio	req. jckt. thick (in.)	*req. # of layers*	max. shear (kip)	req. thick (in.)	*# lrs for shear*
13	7	5	0.375	60	60	7.275	6	15.633	4.26E-04	5.11E-01	0.7	156.6	0.0067	0.0047	0.0031	0.0069	*0.14*	3.915	0.016296	*0.32*

REFERENCES:

1 ICBO Acceptance Criteria for Concrete Strengthening Using Fiber-Reinforced Composite Systems, AC125, April 1997, Sect. 7.3.2.4.

2 Priestley, M.J.N., Seible, F., Calvi, G.M., Seismic Design and Retrofit of Bridges, John Wiley & Sons, Inc., New York, 1996, pp 566-623.

3 Priestley, M.J.N., Seible, F., Seismic Retrofit of Bridge Columns Using High StrengthFiberglass/Epoxy Jackets -Design Recommendations-, Department of Applied Mechanics and Engineering Sciences, University of California San Diego, 1994

OUT - OF - PHASE

SECTION PROPERTIES:

Section Depth	*= 16.0 in.*
Section Width	*= 13.0 in.*
Cover to Main Steel	*= 0.7 in.*
Concrete Strength	*= 5.00 ksi*
Concrete Model	*= Mander*
Steel Strength	*= 40.0 ksi*
Young's Modulus	*= 29000.0 ksi*
Steel Model	*= Mild Strength Steel*
Tension Side Reinforcement	*= 4 Bars (#3 Bars)*
Compression Side Reinforcement	*= 4 Bars (#3 Bars)*
Side Reinforcement	*= 4 Bars (#3 Bars) each side*

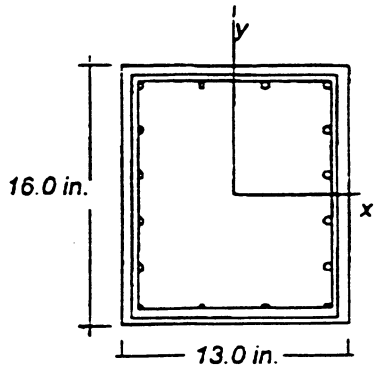

Hoop Size	*= #3 Bars*	*Average Number of Legs*	*= 2.0*
Hoop Spacing	*= 12.0 in.*	*Hoop Strength*	*= 40.0 ksi*

SECTION ANALYSIS RESULTS:

Applied Axial Load	*= 0.0 Kips*
Moment Capacity	*= 56.4 Kips ft (677.4 Kips in.)*
Section N.A. Depth	*= 1.0 in.*
Section Curvature	*= 3.95e-03 1/in.*
Maximum Concrete Strain	*= 4.0000e-03*
Extreme Steel Strain	*= 5.5818e-02*

SECTION PROPERTIES:

Section Depth	*= 16.0 in.*
Section Width	*= 13.0 in.*
Cover to Main Steel	*= 0.7 in.*
Concrete Strength	*= 5.00 ksi*
Concrete Model	*= Mander*
Steel Strength	*= 40.0 ksi*
Young's Modulus	*= 29000.0 ksi*
Steel Model	*= Mild Strength Steel*
Tension Side Reinforcement	*= 4 Bars (#3 Bars)*
Compression Side Reinforcement	*= 4 Bars (#3 Bars)*
Side Reinforcement	*= 4 Bars (#3 Bars) each side*

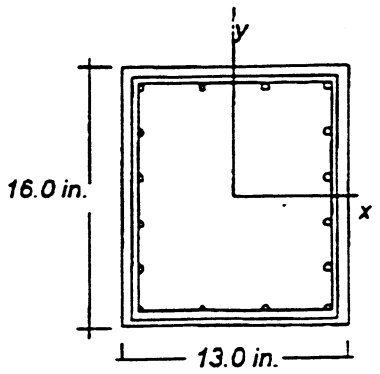

Hoop Size	*= #3 Bars*	*Average Number of Legs*	*= 2.0*
Hoop Spacing	*= 12.0 in.*	*Hoop Strength*	*= 40.0 ksi*

MOMENT CURVATURE ANALYSIS RESULTS:

The Ideal Moment Capacity is based on the concrete strain of 0.005.

Applied Axial Load	*= 0.0 Kips*
Eleff	*= 2.32e+04 Kips sq.ft*
Curvature Ductility	*= 23.1 1/in.*

Moment Curvature Plot

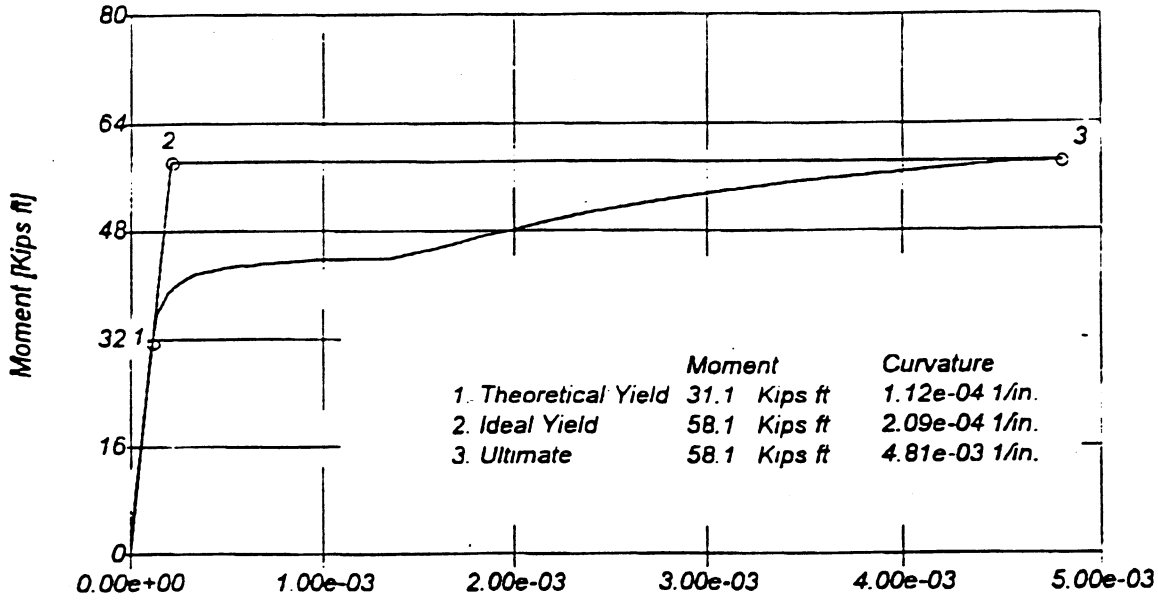

Conc. Strain	N.A. Depth	Steel Strain	Moment Cap.	Curvature	
0.0001	3.1 in.	-0.00040	9.6 Kips ft	3.27e-05 1/in.	
0.0002	3.1 in.	-0.00080	19.2 Kips ft	6.55e-05 1/in.	
0.0003	3.1 in.	-0.00120	28.7 Kips ft	9.81e-05 1/in.	
0.0004	2.9 in.	-0.00171	35.7 Kips ft	1.38e-04 1/in.	__Yield
0.0005	2.6 in.	-0.00244	38.6 Kips ft	1.92e-04 1/in.	
0.0006	2.3 in.	-0.00333	40.3 Kips ft	2.57e-04 1/in.	
0.0007	2.1 in.	-0.00439	41.3 Kips ft	3.32e-04 1/in.	
0.0008	1.9 in.	-0.00559	42.0 Kips ft	4.17e-04 1/in.	
0.0009	1.8 in.	-0.00693	42.4 Kips ft	5.11e-04 1/in.	
0.0010	1.6 in.	-0.00839	42.8 Kips ft	6.13e-04 1/in.	
0.0011	1.5 in.	-0.00998	43.0 Kips ft	7.22e-04 1/in.	
0.0012	1.4 in.	-0.01165	43.2 Kips ft	8.38e-04 1/in.	
0.0013	1.4 in.	-0.01341	43.4 Kips ft	9.60e-04 1/in.	
0.0014	1.3 in.	-0.01523	43.5 Kips ft	1.08e-03 1/in.	
0.0015	1.2 in.	-0.01713	43.6 Kips ft	1.22e-03 1/in.	
0.0016	1.2 in.	-0.01906	43.7 Kips ft	1.35e-03 1/in.	
0.0017	1.2 in.	-0.02082	44.4 Kips ft	1.47e-03 1/in.	
0.0018	1.1 in.	-0.02251	45.2 Kips ft	1.59e-03 1/in.	
0.0019	1.1 in.	-0.02422	46.1 Kips ft	1.70e-03 1/in.	
0.0020	1.1 in.	-0.02592	46.9 Kips ft	1.82e-03 1/in.	
0.0025	1.0 in.	-0.03415	50.4 Kips ft	2.39e-03 1/in.	
0.0030	1.0 in.	-0.04191	53.0 Kips ft	2.93e-03 1/in.	
0.0035	1.0 in.	-0.04934	54.9 Kips ft	3.45e-03 1/in.	
0.0040	1.0 in.	-0.05656	56.4 Kips ft	3.95e-03 1/in.	
0.0045	1.0 in.	-0.06328	57.5 Kips ft	4.42e-03 1/in.	
0.0050	1.0 in.	-0.06874	58.1 Kips ft	4.81e-03 1/in.	

Ultimate concrete strain was exceeded.

SECTION PROPERTIES:

Section Depth	*= 7.0 in.*
Section Width	*= 13.0 in.*
Cover to Main Steel	*= 0.7 in.*
Concrete Strength	*= 5.00 ksi*
Concrete Model	*= Mander*
Steel Strength	*= 40.0 ksi*
Young's Modulus	*= 29000.0 ksi*
Steel Model	*= Mild Strength Steel*

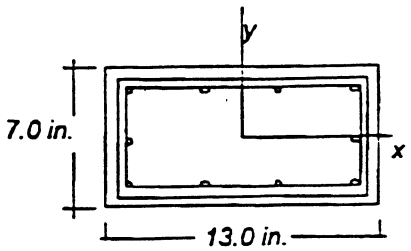

Tension Side Reinforcement	*= 4 Bars (#3 Bars)*
Compression Side Reinforcement	*= 4 Bars (#3 Bars)*
Side Reinforcement	*= 1 Bars (#3 Bars) each side*

Hoop Size	*= #3 Bars*	*Average Number of Legs*	*= 2.0*
Hoop Spacing	*= 12.0 in.*	*Hoop Strength*	*= 40.0 ksi*

SECTION ANALYSIS RESULTS:

Applied Axial Load	*= 0.0 Kips*
Moment Capacity	*= 13.0 Kips ft (156.6 Kips in.)*
Section N.A. Depth	*= 0.7 in.*
Section Curvature	*= 5.74e-03 1/in.*
Maximum Concrete Strain	*= 4.0000e-03*
Extreme Steel Strain	*= 3.1231e-02*

SECTION PROPERTIES:

Section Depth	*= 7.0 in.*
Section Width	*= 13.0 in.*
Cover to Main Steel	*= 0.7 in.*
Concrete Strength	*= 5.00 ksi*
Concrete Model	*= Mander*
Steel Strength	*= 40.0 ksi*
Young's Modulus	*= 29000.0 ksi*
Steel Model	*= Mild Strength Steel*
Tension Side Reinforcement	*= 4 Bars (#3 Bars)*
Compression Side Reinforcement	*= 4 Bars (#3 Bars)*
Side Reinforcement	*= 1 Bars (#3 Bars) each side*
Hoop Size	*= #3 Bars*
Hoop Spacing	*= 12.0 in.*
Average Number of Legs	*= 2.0*
Hoop Strength	*= 40.0 ksi*

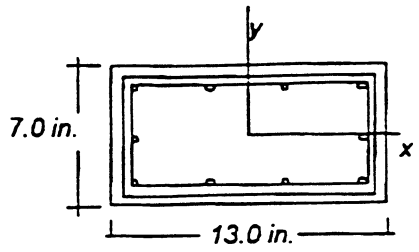

MOMENT CURVATURE ANALYSIS RESULTS:

The Ideal Moment Capacity is based on the concrete strain of 0.005.

Applied Axial Load	*= 0.0 Kips*
Eleff	*= 2.60e+03 Kips sq.ft*
Curvature Ductility	*= 15.9 1/in.*

Moment Curvature Plot

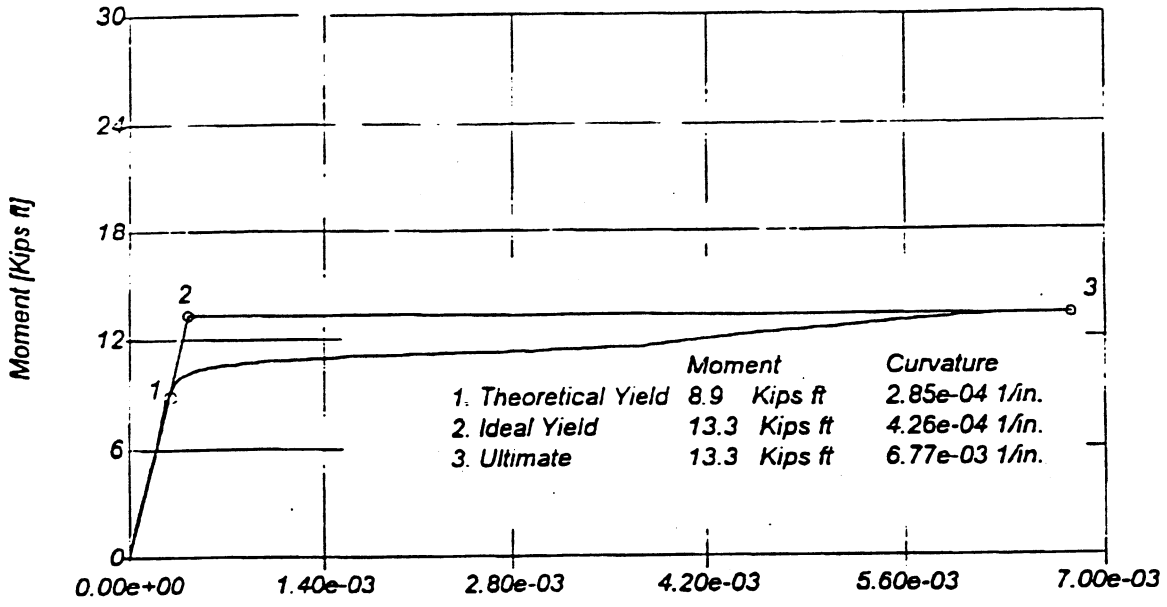

Conc. Strain	N.A. Depth	Steel Strain	Moment Cap.	Curvature	
0.0001	1.5 in.	-0.00031	2.1 Kips ft	6.55e-05 1/in.	
0.0002	1.5 in.	-0.00063	4.3 Kips ft	1.31e-04 1/in.	
0.0003	1.5 in.	-0.00094	6.4 Kips ft	1.96e-04 1/in.	
0.0004	1.5 in.	-0.00125	8.5 Kips ft	2.61e-04 1/in.	
0.0005	1.4 in.	-0.00171	9.9 Kips ft	3.49e-04 1/in.	__Yield
0.0006	1.3 in.	-0.00238	10.3 Kips ft	4.71e-04 1/in.	
0.0007	1.1 in.	-0.00316	10.5 Kips ft	6.10e-04 1/in.	
0.0008	1.0 in.	-0.00403	10.7 Kips ft	7.63e-04 1/in.	
0.0009	1.0 in.	-0.00497	10.8 Kips ft	9.27e-04 1/in.	
0.0010	0.9 in.	-0.00596	10.9 Kips ft	1.10e-03 1/in.	
0.0011	0.9 in.	-0.00698	11.0 Kips ft	1.28e-03 1/in.	
0.0012	0.8 in.	-0.00803	11.0 Kips ft	1.46e-03 1/in.	
0.0013	0.8 in.	-0.00910	11.1 Kips ft	1.64e-03 1/in.	
0.0014	0.8 in.	-0.01017	11.1 Kips ft	1.83e-03 1/in.	
0.0015	0.7 in.	-0.01125	11.2 Kips ft	2.01e-03 1/in.	
0.0016	0.7 in.	-0.01232	11.2 Kips ft	2.20e-03 1/in.	
0.0017	0.7 in.	-0.01339	11.2 Kips ft	2.38e-03 1/in.	
0.0018	0.7 in.	-0.01444	11.3 Kips ft	2.57e-03 1/in.	
0.0019	0.7 in.	-0.01548	11.3 Kips ft	2.75e-03 1/in.	
0.0020	0.7 in.	-0.01650	11.3 Kips ft	2.92e-03 1/in.	
0.0025	0.7 in.	-0.02120	11.6 Kips ft	3.74e-03 1/in.	
0.0030	0.7 in.	-0.02517	12.3 Kips ft	4.45e-03 1/in.	
0.0035	0.7 in.	-0.02885	12.7 Kips ft	5.11e-03 1/in.	
0.0040	0.7 in.	-0.03231	13.0 Kips ft	5.74e-03 1/in.	
0.0045	0.7 in.	-0.03562	13.3 Kips ft	6.34e-03 1/in.	
0.0050	0.7 in.	-0.03785	13.3 Kips ft	6.77e-03 1/in.	

Ultimate concrete strain was exceeded.

TRANSVERSE

SECTION PROPERTIES:

Section Depth	= 13.0 in.
Section Width	= 7.0 in.
Cover to Main Steel	= 0.7 in.
Concrete Strength	= 5.00 ksi
Concrete Model	= Mander
Steel Strength	= 40.0 ksi
Young's Modulus	= 29000.0 ksi
Steel Model	= Mild Strength Steel
Tension Side Reinforcement	= 4 Bars (#3 Bars)
Compression Side Reinforcement	= 4 Bars (#3 Bars)
Side Reinforcement	= 3 Bars (#3 Bars) each side

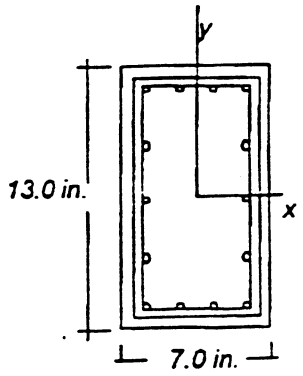

Hoop Size	= #3 Bars	Average Number of Legs	= 2.0
Hoop Spacing	= 12.0 in.	Hoop Strength	= 40.0 ksi

SECTION ANALYSIS RESULTS:

Applied Axial Load	= 0.0 Kips
Moment Capacity	= 35.5 Kips ft (426.6 Kips in.)
Section N.A. Depth	= 1.2 in.
Section Curvature	= 3.37e-03 1/in.
Maximum Concrete Strain	= 4.0000e-03
Extreme Steel Strain	= 3.6907e-02

SECTION PROPERTIES:

Section Depth	*= 13.0 in.*
Section Width	*= 7.0 in.*
Cover to Main Steel	*= 0.7 in.*
Concrete Strength	*= 5.00 ksi*
Concrete Model	*= Mander*
Steel Strength	*= 40.0 ksi*
Young's Modulus	*= 29000.0 ksi*
Steel Model	*= Mild Strength Steel*
Tension Side Reinforcement	*= 4 Bars (#3 Bars)*
Compression Side Reinforcement	*= 4 Bars (#3 Bars)*
Side Reinforcement	*= 3 Bars (#3 Bars) each side*

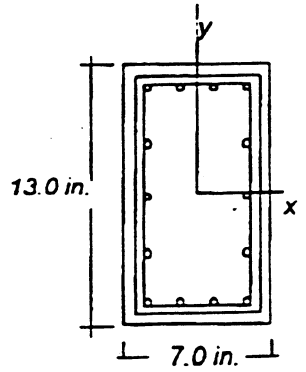

Hoop Size	*= #3 Bars*	*Average Number of Legs*	*= 2.0*
Hoop Spacing	*= 12.0 in.*	*Hoop Strength*	*= 40.0 ksi*

MOMENT CURVATURE ANALYSIS RESULTS:

The Ideal Moment Capacity is based on the concrete strain of 0.005.

Applied Axial Load	*= 0.0 Kips*
Eleff	*= 1.25e+04 Kips sq.ft*
Curvature Ductility	*= 15.5 1/in.*

Moment Curvature Plot

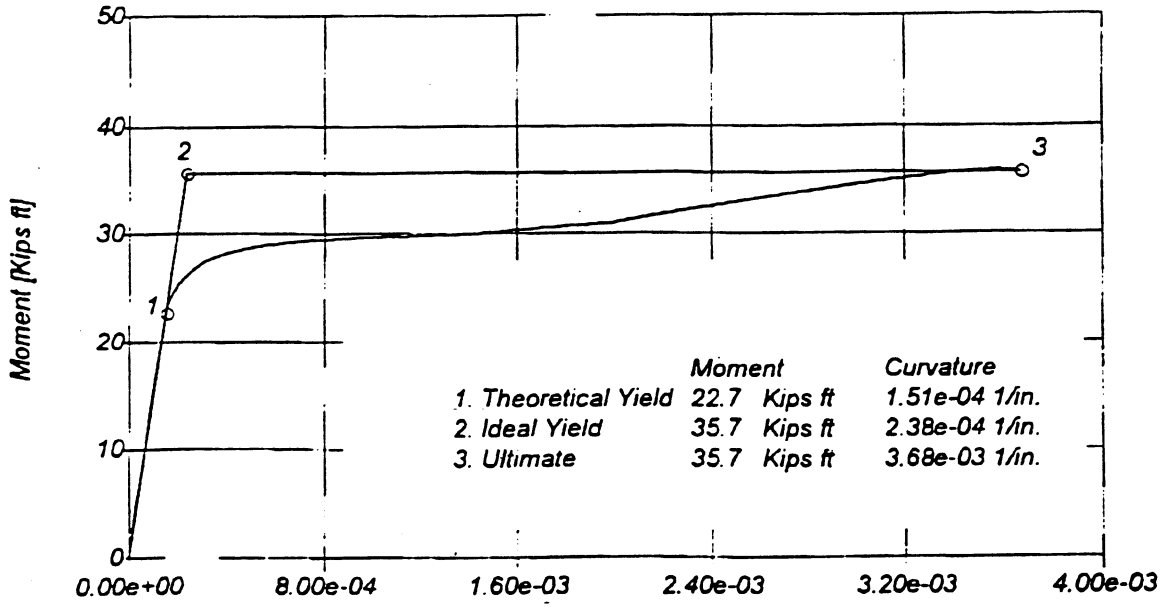

Conc. Strain	N.A. Depth	Steel Strain	Moment Cap.	Curvature	
0.0001	3.2 in.	-0.00028	4.8 Kips ft	3.12e-05 1/in.	
0.0002	3.2 in.	-0.00057	9.5 Kips ft	6.24e-05 1/in.	
0.0003	3.2 in.	-0.00085	14.3 Kips ft	9.36e-05 1/in.	
0.0004	3.2 in.	-0.00114	19.0 Kips ft	1.25e-04 1/in.	
0.0005	3.2 in.	-0.00143	23.5 Kips ft	1.57e-04 1/in.	__Yield
0.0006	2.9 in.	-0.00191	25.5 Kips ft	2.04e-04 1/in.	
0.0007	2.7 in.	-0.00249	26.7 Kips ft	2.58e-04 1/in.	
0.0008	2.5 in.	-0.00315	27.6 Kips ft	3.20e-04 1/in.	
0.0009	2.3 in.	-0.00390	28.2 Kips ft	3.89e-04 1/in.	
0.0010	2.2 in.	-0.00473	28.6 Kips ft	4.65e-04 1/in.	
0.0011	2.0 in.	-0.00564	29.0 Kips ft	5.46e-04 1/in.	
0.0012	1.9 in.	-0.00661	29.2 Kips ft	6.33e-04 1/in.	
0.0013	1.8 in.	-0.00763	29.4 Kips ft	7.24e-04 1/in.	
0.0014	1.7 in.	-0.00871	29.6 Kips ft	8.20e-04 1/in.	
0.0015	1.6 in.	-0.00984	29.7 Kips ft	9.20e-04 1/in.	
0.0016	1.6 in.	-0.01101	29.8 Kips ft	1.02e-03 1/in.	
0.0017	1.5 in.	-0.01219	29.9 Kips ft	1.13e-03 1/in.	
0.0018	1.5 in.	-0.01343	29.9 Kips ft	1.24e-03 1/in.	
0.0019	1.4 in.	-0.01467	30.0 Kips ft	1.34e-03 1/in.	
0.0020	1.4 in.	-0.01592	30.0 Kips ft	1.45e-03 1/in.	
0.0025	1.3 in.	-0.02197	31.0 Kips ft	1.98e-03 1/in.	
0.0030	1.2 in.	-0.02734	32.8 Kips ft	2.46e-03 1/in.	
0.0035	1.2 in.	-0.03266	34.4 Kips ft	2.93e-03 1/in.	
0.0040	1.2 in.	-0.03754	35.5 Kips ft	3.37e-03 1/in.	
0.0045	1.3 in.	-0.03981	35.9 Kips ft	3.59e-03 1/in.	
0.0050	1.4 in.	-0.04041	35.7 Kips ft	3.68e-03 1/in.	

Ultimate concrete strain was exceeded.

SECTION PROPERTIES:

Section Depth	*= 13.0 in.*
Section Width	*= 16.0 in.*
Cover to Main Steel	*= 0.7 in.*
Concrete Strength	*= 5.00 ksi*
Concrete Model	*= Mander*
Steel Strength	*= 40.0 ksi*
Young's Modulus	*= 29000.0 ksi*
Steel Model	*= Mild Strength Steel*
Tension Side Reinforcement	*= 6 Bars (#3 Bars)*
Compression Side Reinforcement	*= 6 Bars (#3 Bars)*
Side Reinforcement	*= 2 Bars (#3 Bars) each side*

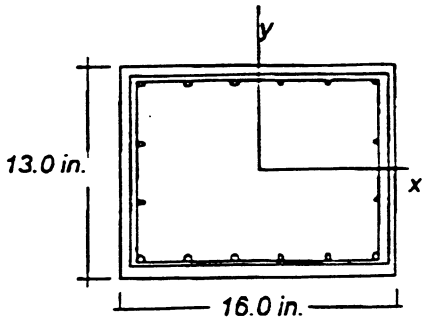

Hoop Size	*= #3 Bars*	*Average Number of Legs*	*= 2.0*
Hoop Spacing	*= 12.0 in.*	*Hoop Strength*	*= 40.0 ksi*

SECTION ANALYSIS RESULTS:

Applied Axial Load	*= 0.0 Kips*
Moment Capacity	*= 46.6 Kips ft (558.6 Kips in.)*
Section N.A. Depth	*= 0.8 in.*
Section Curvature	*= 4.86e-03 1/in.*
Maximum Concrete Strain	*= 4.0000e-03*
Extreme Steel Strain	*= 5.4985e-02*

SECTION PROPERTIES:

Section Depth	*= 13.0 in.*
Section Width	*= 16.0 in.*
Cover to Main Steel	*= 0.7 in.*
Concrete Strength	*= 5.00 ksi*
Concrete Model	*= Mander*
Steel Strength	*= 40.0 ksi*
Young's Modulus	*= 29000.0 ksi*
Steel Model	*= Mild Strength Steel*
Tension Side Reinforcement	*= 6 Bars (#3 Bars)*
Compression Side Reinforcement	*= 6 Bars (#3 Bars)*
Side Reinforcement	*= 2 Bars (#3 Bars) each side*

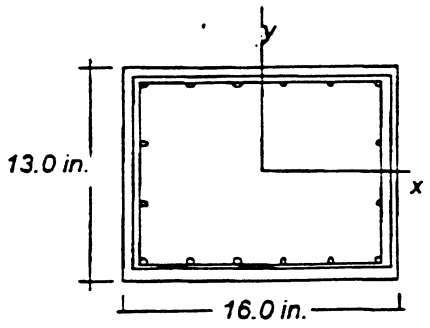

Hoop Size	*= #3 Bars*	*Average Number of Legs*	*= 2.0*
Hoop Spacing	*= 12.0 in.*	*Hoop Strength*	*= 40.0 ksi*

MOMENT CURVATURE ANALYSIS RESULTS:

The Ideal Moment Capacity is based on the concrete strain of 0.005.

Applied Axial Load	*= 0.0 Kips*
Eleff	*= 1.65e+04 Kips sq.ft*
Curvature Ductility	*= 24.4 1/in.*

Moment Curvature Plot

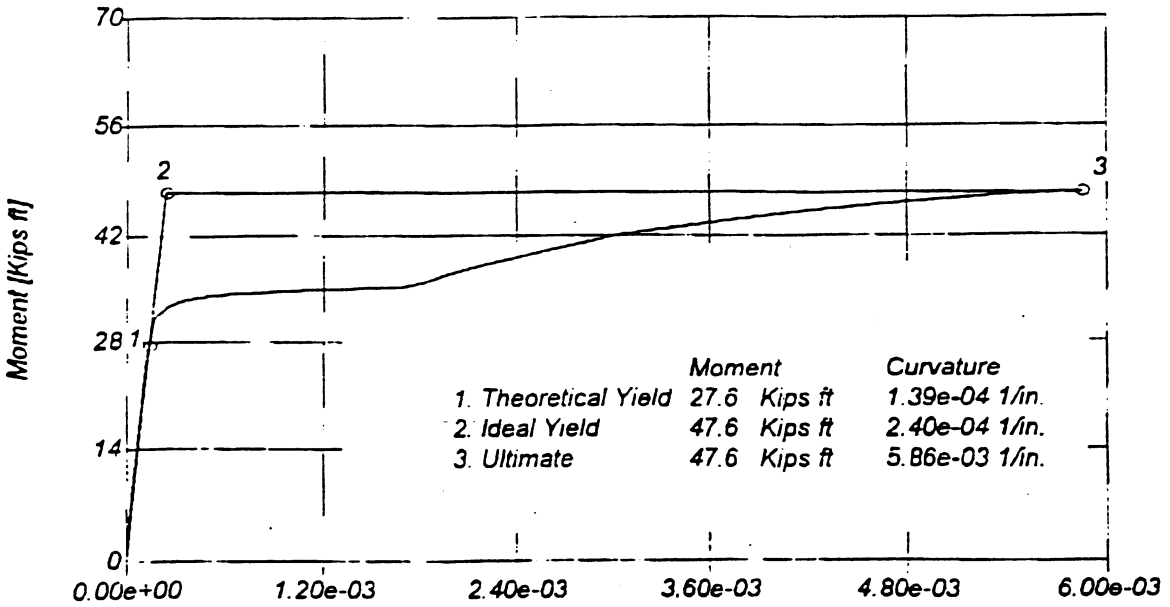

Conc. Strain	N.A. Depth	Steel Strain	Moment Cap.	Curvature	
0.0001	2.5 in.	-0.00040	8 6 Kips ft	4.02e-05 1/in.	
0.0002	2.5 in.	-0.00079	17.1 Kips ft	8.04e-05 1/in.	
0.0003	2.5 in.	-0.00119	25.6 Kips ft	1.20e-04 1/in.	
0.0004	2.3 in.	-0.00174	31.3 Kips ft	1.74e-04 1/in.	__Yield
0.0005	2.0 in.	-0.00263	32.8 Kips ft	2.54e-04 1/in.	
0.0006	1.7 in.	-0.00372	33.6 Kips ft	3.51e-04 1/in.	
0.0007	1.5 in.	-0.00500	34.0 Kips ft	4.62e-04 1/in.	
0.0008	1.4 in.	-0.00643	34.4 Kips ft	5.87e-04 1/in.	
0.0009	1.2 in.	-0.00801	34.6 Kips ft	7.23e-04 1/in.	
0.0010	1.2 in.	-0.00970	34.7 Kips ft	8.68e-04 1/in.	
0.0011	1.1 in.	-0.01149	34.8 Kips ft	1.02e-03 1/in.	
0.0012	1.0 in.	-0.01333	34.9 Kips ft	1.18e-03 1/in.	
0.0013	1.0 in.	-0.01523	35.0 Kips ft	1.34e-03 1/in.	
0.0014	0.9 in.	-0.01715	35.1 Kips ft	1.50e-03 1/in.	
0.0015	0.9 in.	-0.01908	35.2 Kips ft	1.67e-03 1/in.	
0.0016	0.9 in.	-0.02079	35.9 Kips ft	1.82e-03 1/in.	
0.0017	0.9 in.	-0.02242	36.8 Kips ft	1.96e-03 1/in.	
0.0018	0.9 in.	-0.02404	37.6 Kips ft	2.10e-03 1/in.	
0.0019	0.9 in.	-0.02564	38.4 Kips ft	2.23e-03 1/in.	
0.0020	0.8 in.	-0.02722	39.1 Kips ft	2.37e-03 1/in.	
0.0025	0.8 in.	-0.03489	42.0 Kips ft	3.03e-03 1/in.	
0.0030	0.8 in.	-0.04220	44.0 Kips ft	3.67e-03 1/in.	
0.0035	0.8 in.	-0.04917	45.5 Kips ft	4.27e-03 1/in.	
0.0040	0.8 in.	-0.05590	46.6 Kips ft	4.86e-03 1/in.	
0.0045	0.8 in.	-0.06227	47.3 Kips ft	5.42e-03 1/in.	
0.0050	0.9 in.	-0.06721	47.6 Kips ft	5.86e-03 1/in.	

Ultimate concrete strain was exceeded.

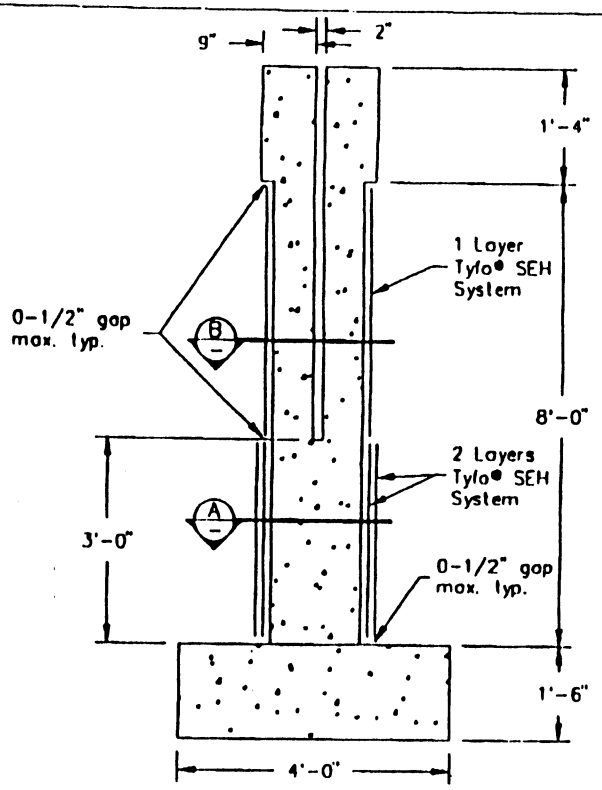

Column Split View – Elevation
Not to Scale

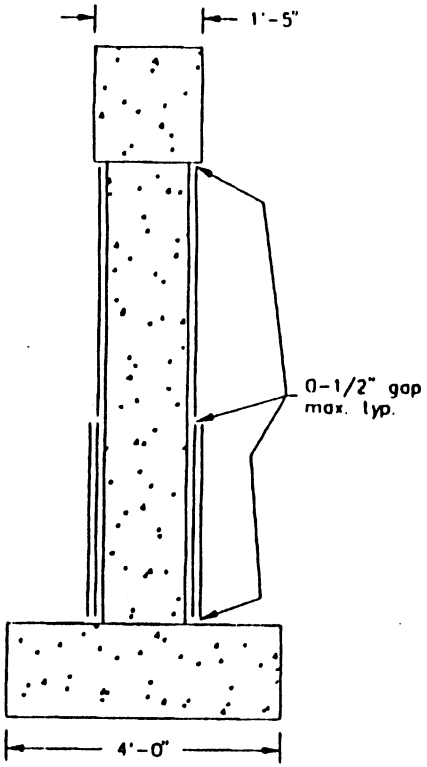

Column Side View – Elevation
Not to Scale

General Notes:

1. Ensure a 3/4" min. radius at column edges.
2. Broom-clean column surfaces
3. Apply primecoat Tyfo® WS Epoxy.
4. Apply specified layers of Tyfo® SEH System

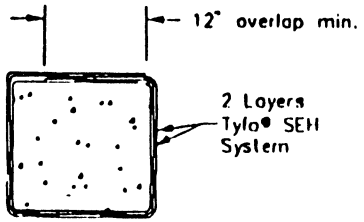

(A) Section
Not to Scale

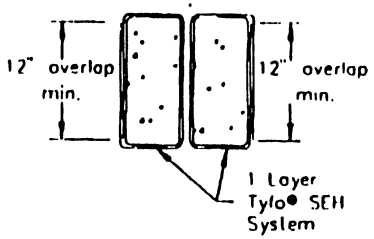

(B) Section
Not to Scale

WSDOT Research Project

Column Design Out-of-Plane Loading

FYFE CO. LLC
6044 Cornerstone Ct. West, Suite C, San Diego, CA 92121-4736
TEL: 619-642-0694 FAX: 619-642-0947

Dwg No: 404-1	Job No 298RD	Acad File No FC\298RD\404-1
Date: 10/8/98	Drawn by E. Morrow	Chk'd by P.B. Milligan
Scale N.T.S.	App'd by P.B. Milligan	Sheet 1 of 2

APPENDIX B

SUMITOMO RETROFIT DESIGN CALCULATIONS

BERGER/ABAM ENGINEERS INC

Project _____ Sheet 1 of _____

_____ Job Number _____

Subject _____ Designer _____

_____ Date _____

'OUT-OF-PHASE'

SPECIMEN DETAILS

& TEST SETUP

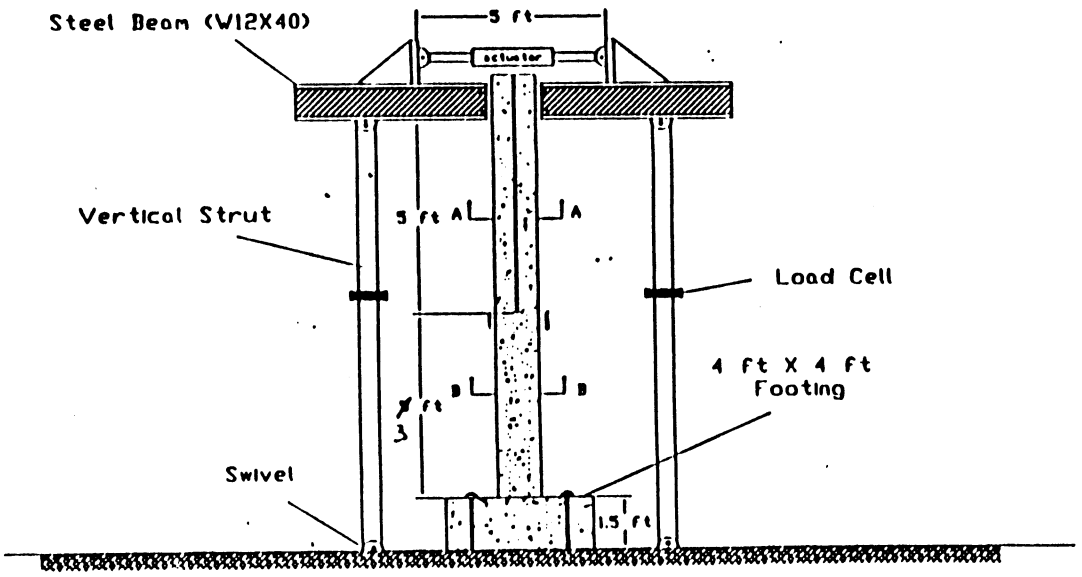

Test setup for out-of-phase Loading

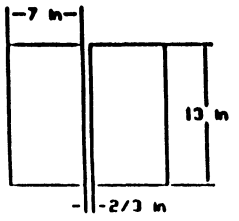

Section A-A

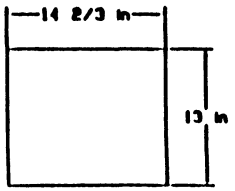

Section B-B

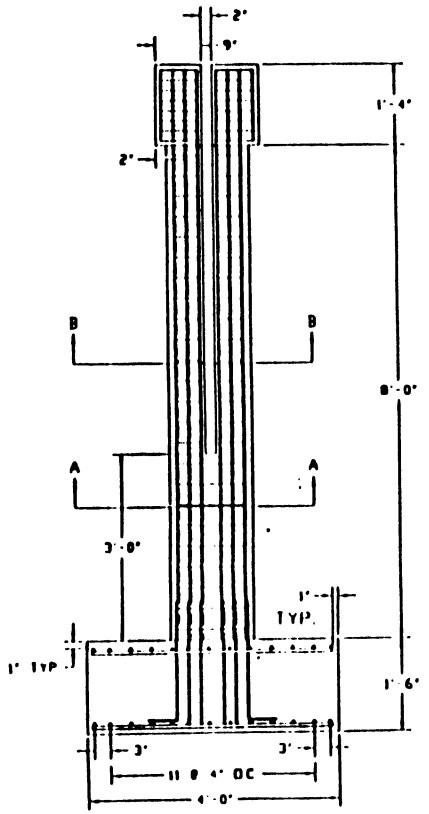

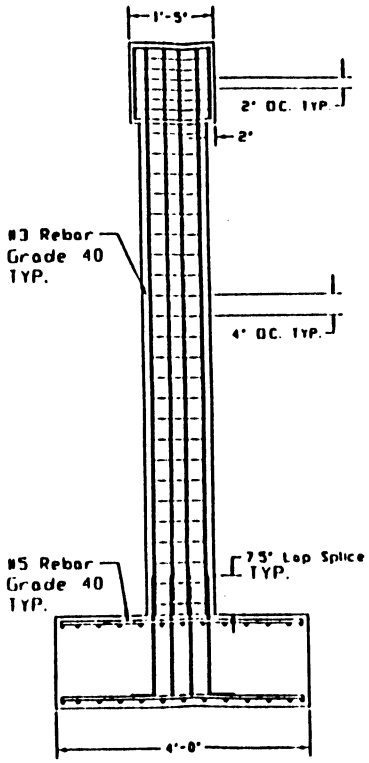

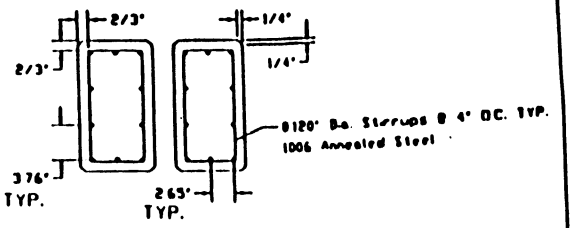

SECTION B-B

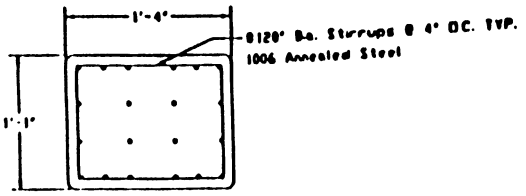

SECTION A-A

Washington State University Department of Civil Engineering	Column Design - Out-of-Phase Loading WSDOT Research Project	DWG. 1

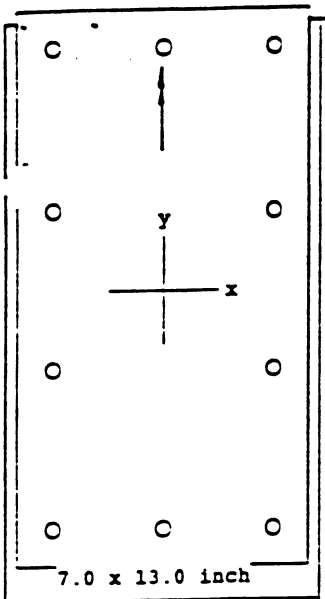

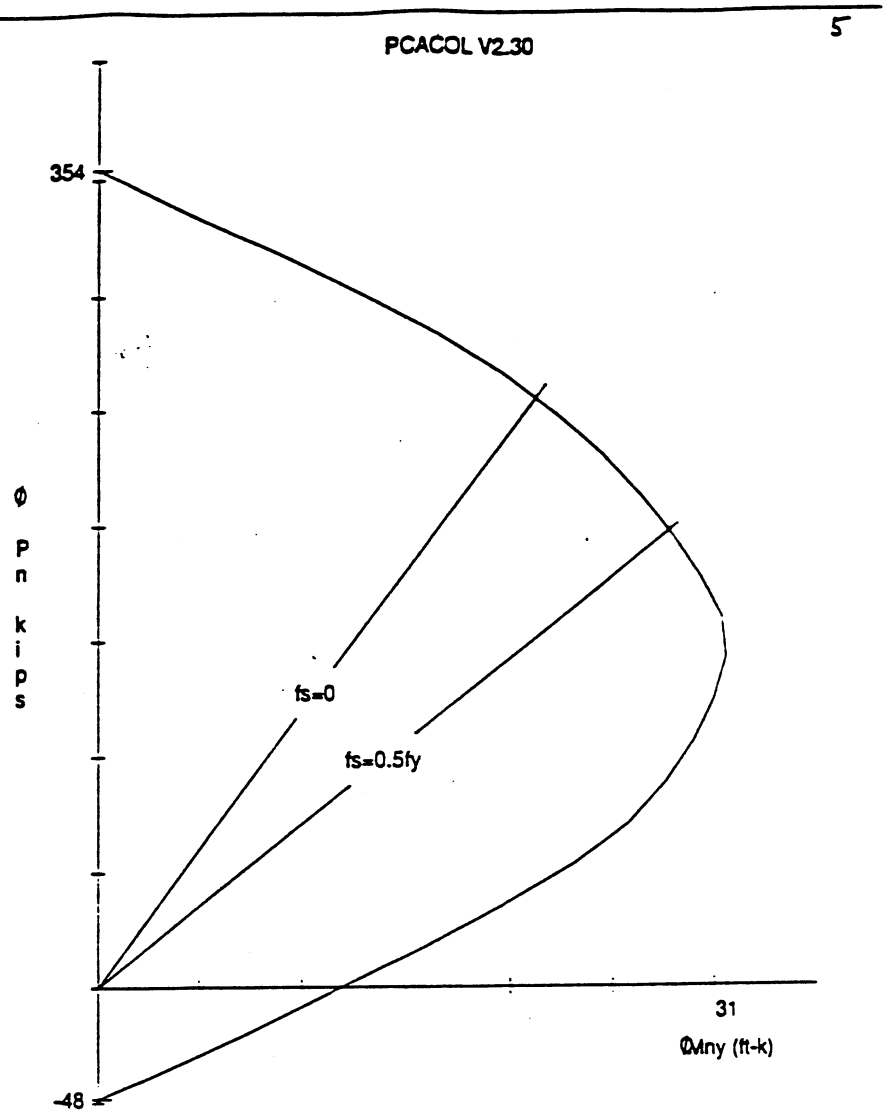

f'c = 4.0 ksi

fy = 44.0 ksi

Confinement: Other

clr cover = 0.67 in

spacing = 2.27 in

10-#3 at 1.21%

= 1 in^2

Ix = 1282 in^4

Iy = 372 in^4

Xo = 0.00 in

Yo = 0.00 in

© 1993 PCA

Licensed To: Licensee name not yet specified.

File name: O:\1997\A97106\DOT-SP-1\GAO\OUTPHASE.COL

Project: DOT Split Column Retrof

Column Id: out-of-phase

Engineer: YQG

Date: 12/16/98 Time: 10:24:59

Code: ACI 318-89

Units: in-lb

Y-axis slenderness is not considered.

Material Properties:

Ec = 3834 ksi eu = 0.003 in/in

fc = 3.40 ksi Es = 29000 ksi

Betal = 0.85

Stress Profile: Block

phi(c) = 1.00, phi(b) = 1.00

```
OOOOOOO    OOOOO    OOOOO    OOOOO    OOOOO   OO
OO    OO  OO   OO  OO   OO  OO   OO  OO   OO  OO
OO    OO  OO   OO  OO   OO  OO   OO  OO   OO  OO
OO    OO  OO       OO   OO  OO       OO   OO  OO
OO    OO  OO       OOOOOOO  OO       OO   OO  OO
OOOOOOO   OO   OO  OO   OO  OO   OO  OO   OO  OO
OO        OO   OO  OO   OO  OO   OO  OO   OO  OO
OO         OOOOO   OO   OO   OOOOO    OOOOO   OOOOO  (TM)
```

Computer program for the Strength Design of Reinforced Concrete Sections

---

Licensee stated above acknowledges that Portland Cement Association (PCA) is not and cannot be responsible for either the accuracy or adequacy of the material supplied as input for processing by the PCACOL(tm) computer program. Furthermore, PCA neither makes any warranty expressed nor implied with respect to the correctness of the output prepared by the PCACOL(tm) program. Although PCA has endeavored to produce PCACOL(tm) error free, the program is not and can't be certified infallible. The final and only responsibility for analysis, design and engineering documents is the licensees. Accordingly, PCA disclaims all responsibility in contract, negligence or other tort for any analysis, design or engineering documents prepared in connection with the use of the PCACOL(tm) program.

7

General Information:

File Name: O:\1997\A97106\DOT-SP-1\GAO\OUTPHASE.COL
Project: DOT Split Column Retrof
Column: out-of-phase
Engineer: YQG
Code: ACI 318-89
Units: US in-lbs
Date: 12/16/98 Time: 10:24:59

Run Option: Investigation
Run Axis: Y-axis
Short (nonslender) column
Column Type: Structural

Material Properties:
---

f'c = 4 ksi
Ec = 3834.25 ksi
fc = 3.4 ksi
eu = 0.003 in/in
Stress Profile: Block
fy = 44 ksi
Es = 29000 ksi
erup = 0 in/in
Betal = 0.85

Geometry:

Rectangular: Width = 7 in
Depth = 13 in

Gross section area, Ag = 91 in^2
Ix = 1281.58 in^4
Iy = 371.583 in^4
Xo = 0 in
Yo = 0 in

Reinforcement:

Rebar Database: ASTM

Size	Diam	Area	Size	Diam	Area	Size	Diam	Area
3	0.38	0.11	4	0.50	0.20	5	0.63	0.31
6	0.75	0.44	7	0.88	0.60	8	1.00	0.79
9	1.13	1.00	10	1.27	1.27	11	1.41	1.56
14	1.69	2.25	18	2.26	4.00			

Confinement: User-defined; phi(c) = 1, phi(b) = 1, a = 1
#3 ties with #10 bars, #4 with larger bars.

Layout: Rectangular
Pattern: Sides Different [Cover to longitudinal reinforcement]

Total steel area, As = 1.10 in^2 at 1.21%

	Top	Bottom	Left	Right
Bars	3 -# 3	3 -# 3	2 -# 3	2 -# 3
Cover(in)	0.67	0.67	0.67	0.67

8

Bending about		Load, P (kips)	X-Mom. (ft-k)	Y-Mom. (ft-k)	N.A. depth (in)
Y	Pure Comp.	354	0	0	12.43
	Balanced	154	0	31	4.08
	Pure Bend.	-0	0	12	0.82

Program completed as requested!

Rotational Flexibility / Fixed or Not?

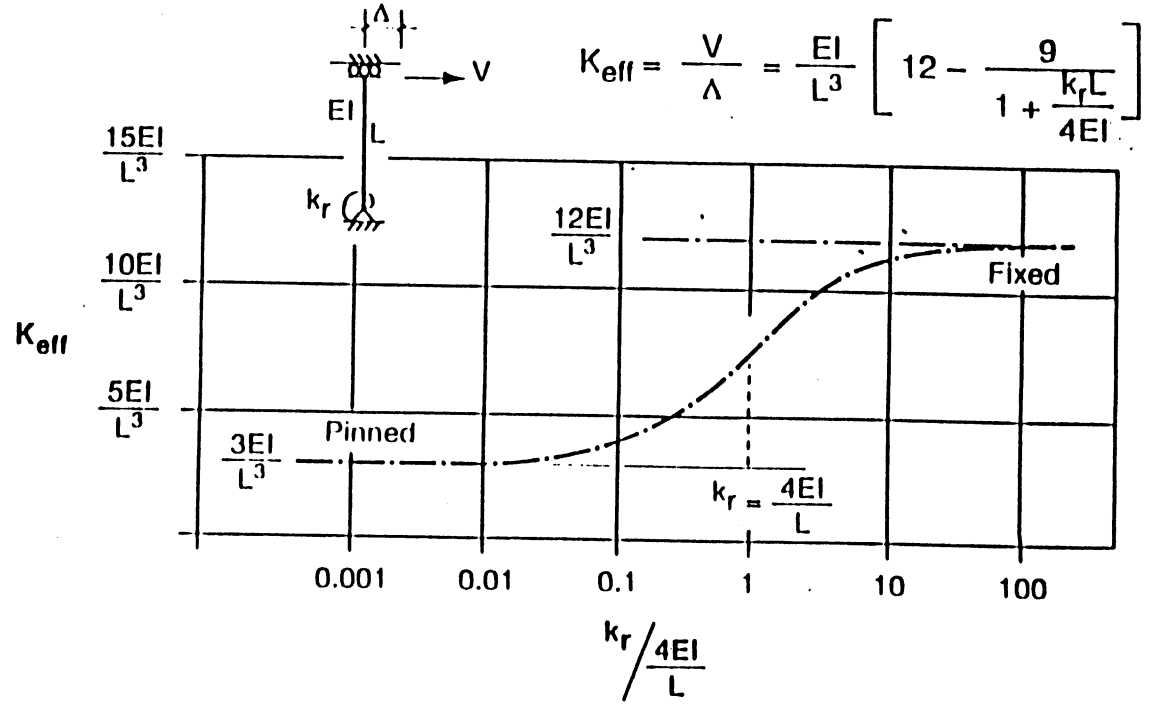

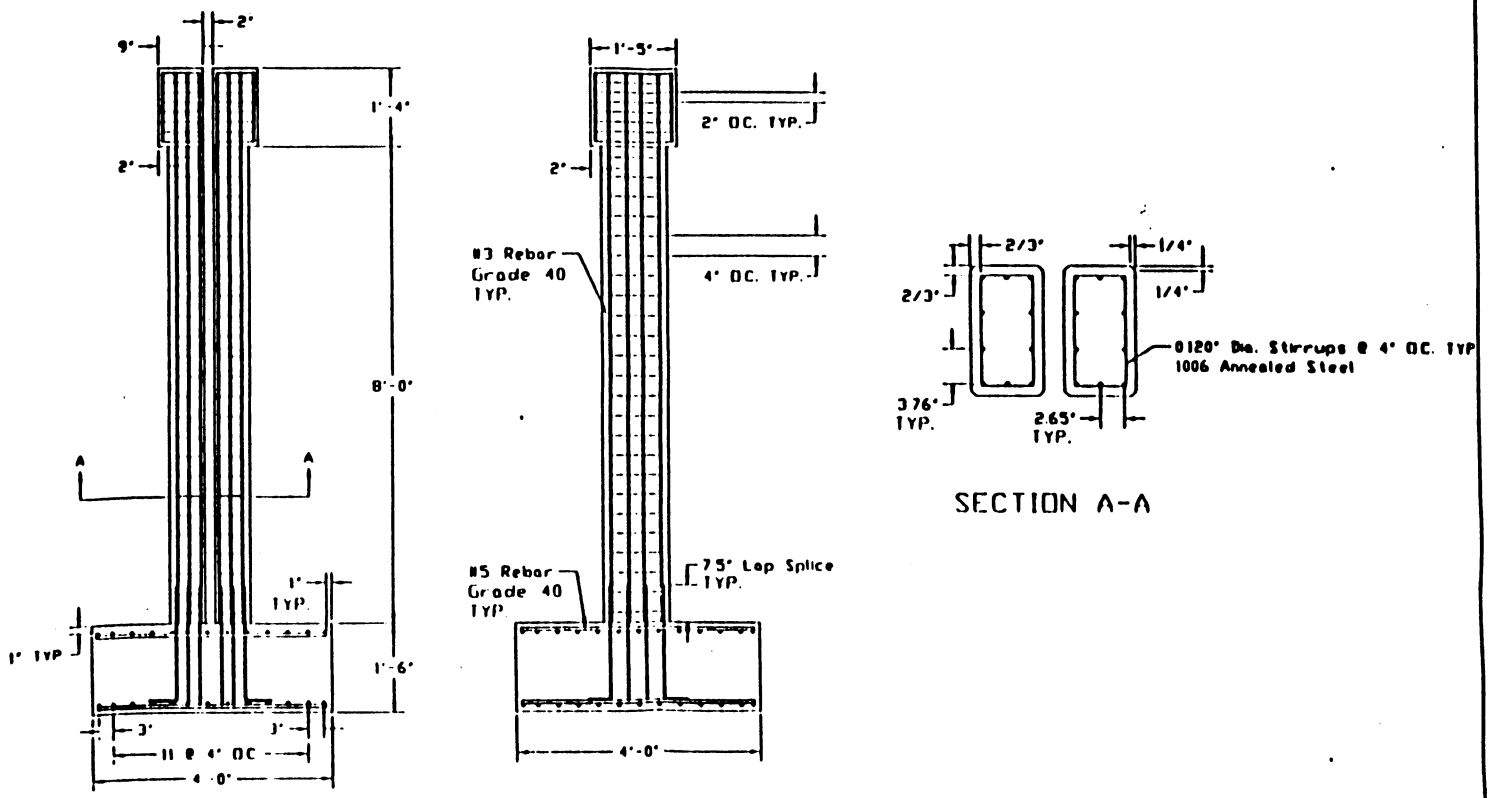

Washington State University Department of Civil Engineering	Column Design - Transverse Loading WSDOT Research Project	DWG 2

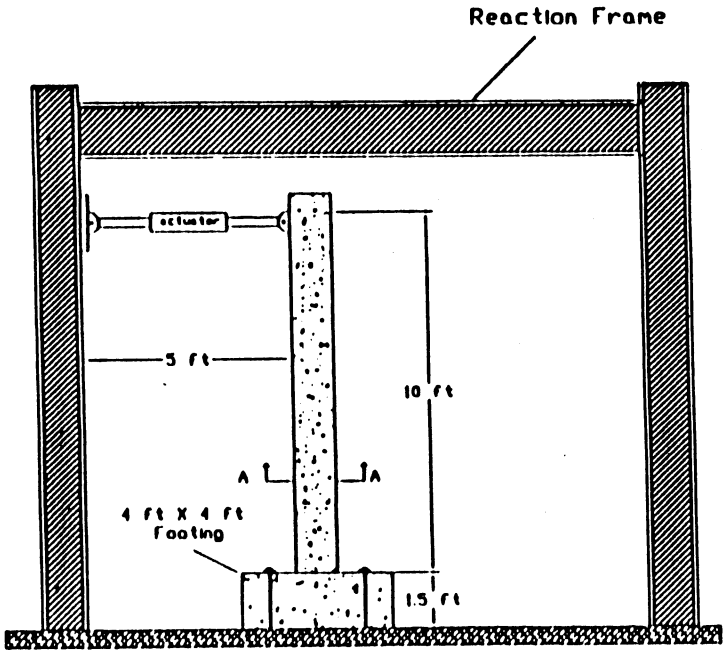

Test setup for transverse loading

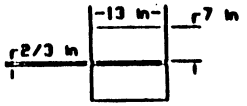

Section A-A

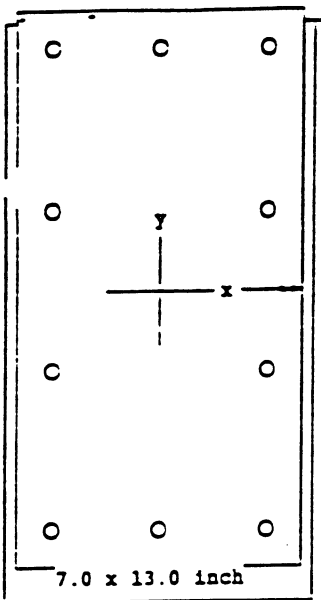

f'c = 4.0 ksi

fy = 44.0 ksi

Confinement: Other

clr cover = 0.67 in

spacing = 2.27 in

10-#3 at 1.21%

= 1 in^2

Ix = 1282 in^4

Iy = 372 in^4

Xo = 0.00 in

Yo = 0.00 in

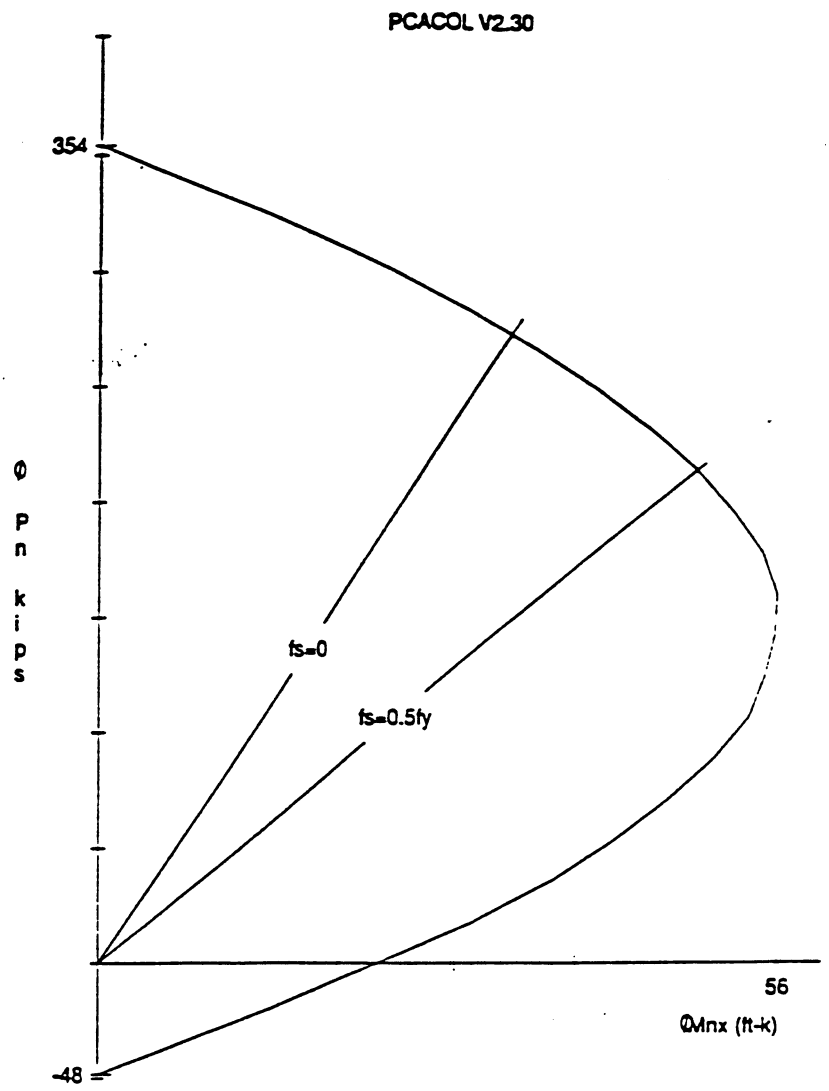

© 1993 PCA

Licensed To: Licensee name not yet specified.

File name: O:\1997\A97106\DOT-SP-1\GAO\TRANSV.COL

Project: DOT Split Column Retrof

Column Id: Transverse

Engineer: YQG

Date: 12/16/98 Time: 10:24:59

Code: ACI 318-89

Units: in-lb

X-axis slenderness is not considered.

Material Properties:

Ec = 3834 ksi eu = 0.003 in/in

fc = 3.40 ksi Es = 29000 ksi

Betal = 0.85

Stress Profile: Block

phi(c) = 1.00, phi(b) = 1.00

```
OOOOOOO    OOOOO    OOOOO    OOOOO    OOOOO   OO
OO    OO  OO   OO  OO   OO  OO   OO  OO   OO  OO
OO    OO  OO   OO  OO   OO  OO   OO  OO   OO  OO
OO    OO  OO       OO   OO  OO       OO   OO  OO
OO    OO  OO       OOOOOOO  OO       OO   OO  OO
OOOOOOO   OO   OO  OO   OO  OO   OO  OO   OO  OO
OO        OO   OO  OO   OO  OO   OO  OO   OO  OO
OO         OOOOO   OO   OO   OOOOO    OOOOO   OOOOO  (TM)
```

Computer program for the Strength Design of Reinforced Concrete Sections

---

Licensee stated above acknowledges that Portland Cement Association (PCA) is not and cannot be responsible for either the accuracy or adequacy of the material supplied as input for processing by the PCACOL(tm) computer program. Furthermore, PCA neither makes any warranty expressed nor implied with respect to the correctness of the output prepared by the PCACOL(tm) program. Although PCA has endeavored to produce PCACOL(tm) error free, the program is not and can't be certified infallible. The final and only responsibility for analysis, design and engineering documents is the licensees. Accordingly, PCA disclaims all responsibility in contract, negligence or other tort for any analysis, design or engineering documents prepared in connection with the use of the PCACOL(tm) program.

General Information:

File Name: O:\1997\A97106\DOT-SP-1\GAO\TRANSV.COL
Project: DOT Split Column Retrof
Column: Transverse
Engineer: YQG
Code: ACI 318-89
Units: US in-lbs
Date: 12/16/98 Time: 10:24:59

Run Option: Investigation
Run Axis: X-axis
Short (nonslender) column
Column Type: Structural

Material Properties:

f'c = 4 ksi
Ec = 3834.25 ksi
fc = 3.4 ksi
eu = 0.003 in/in
Stress Profile: Block
fy = 44 ksi
Es = 29000 ksi
erup = 0 in/in
Betal = 0.85

Geometry:

Rectangular: Width = 7 in
Depth = 13 in

Gross section area, Ag = 91 in^2
Ix = 1281.58 in^4
Iy = 371.583 in^4
Xo = 0 in
Yo = 0 in

Reinforcement:

Rebar Database: ASTM

Size	Diam	Area	Size	Diam	Area	Size	Diam	Area
3	0.38	0.11	4	0.50	0.20	5	0.63	0.31
6	0.75	0.44	7	0.88	0.60	8	1.00	0.79
9	1.13	1.00	10	1.27	1.27	11	1.41	1.56
14	1.69	2.25	18	2.26	4.00			

Confinement: User-defined; phi(c) = 1, phi(b) = 1, a = 1
#3 ties with #10 bars, #4 with larger bars.

Layout: Rectangular
Pattern: Sides Different [Cover to longitudinal reinforcement]

Total steel area, As = 1.10 in^2 at 1.21%

	Top	Bottom	Left	Right
Bars	3 -# 3	3 -# 3	2 -# 3	2 -# 3
Cover(in)	0.67	0.67	0.67	0.67

37

Bending about		Load, P (kips)	X-Mom. (ft-k)	Y-Mom. (ft-k)	N.A. depth (in)
X	Pure Comp.	354	-0	-0	24.57
	Balanced	169	56	-0	8.06
	Pure Bend.	0	23	-0	1.27

Program completed as requested!

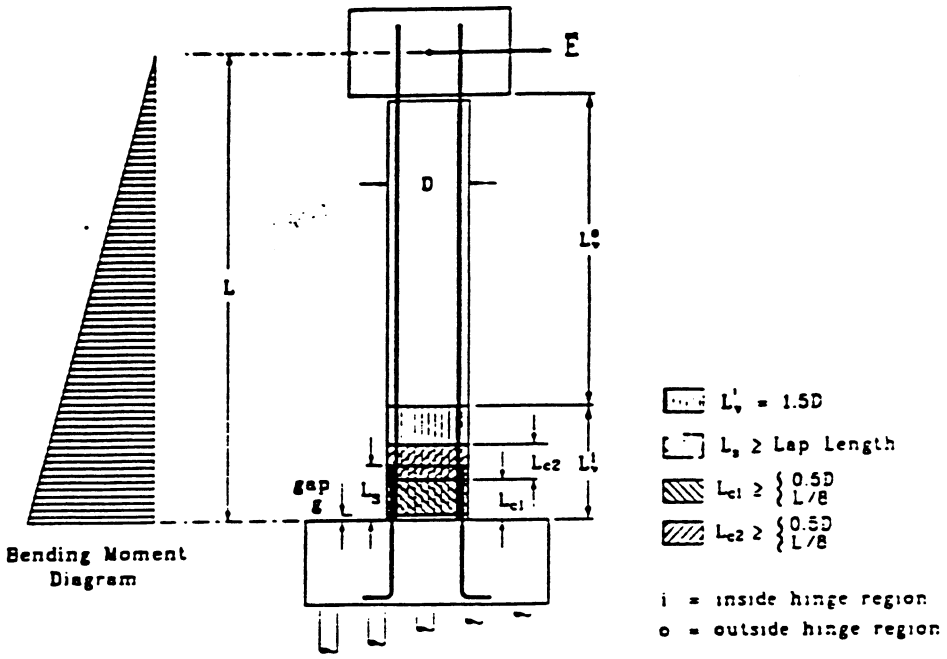

FIG 5. Carbon Jacket Regions for Bridge Column Retrofit, Single Bending

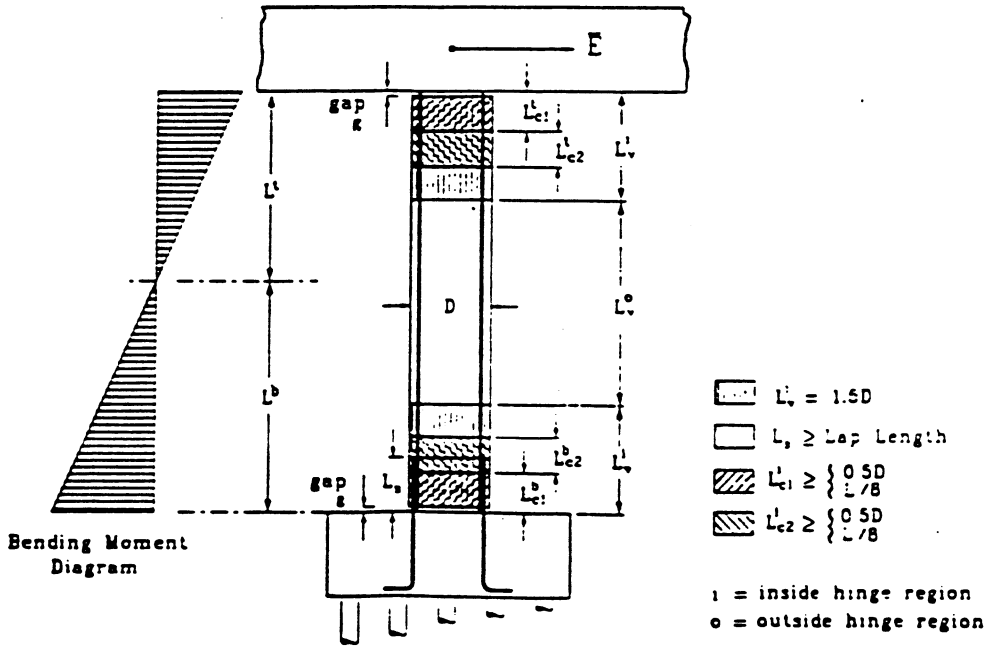

FIG 6. Carbon Jacket Regions for Bridge Column Retrofit, Double Bending

DRAWINGS

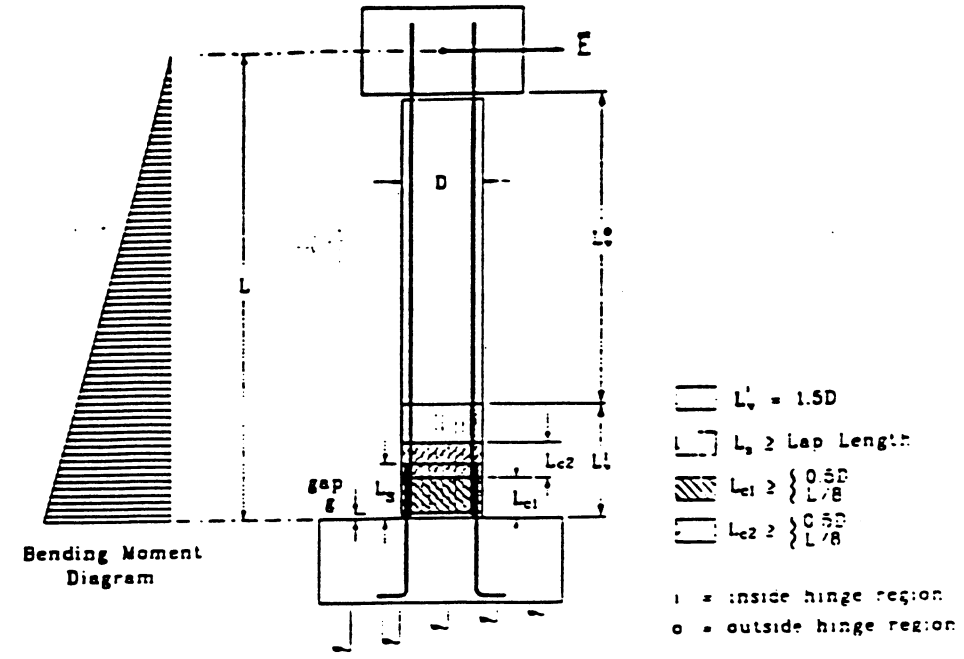

FIG 5. Carbon Jacket Regions for Bridge Column Retrofit. Single Bending

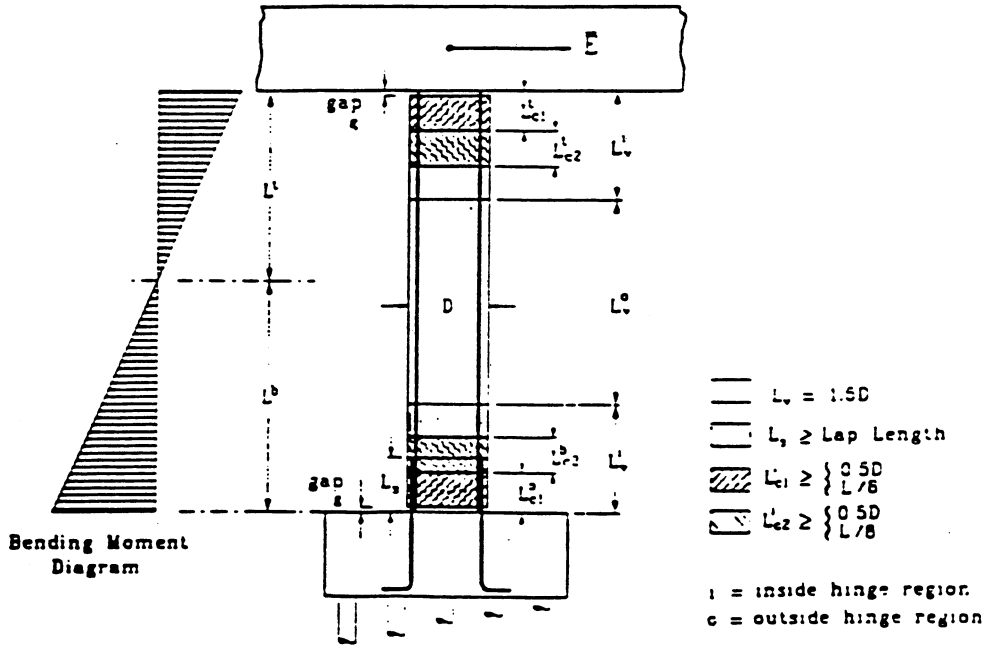

FIG 6. Carbon Jacket Regions for Bridge Column Retrofit. Double Bending

List of Reference Materials

1. Frieder Seible, M.J. Nigel Priestley, Donato Innamorato, *Earthquake Retrofit of Bridge column with Continuous Carbon Fiber Jackets*, Report No. ACTT-95/08, University of California at San Diego, August 1996

2. M.J.N. Priestley, F. Seible, G.M. Calvi, *Seismic Design and Retrofit of Bridges*, John Wiley & Sons, Inc., 1996

BERGER/ABAM
ENGINEERS INC.

PLANNING
ENGINEERING
ENVIRONMENTAL
PROGRAM MANAGEMENT

Facsimile Cover Sheet

Fax ID Number 99 5131

TO

Name David McLean
Firm WSU-CEE
Address Pullman, WA
Fax Number 509-335-7632
cc: Michael W LaNier

FROM

Name Lee Marsh
Firm BERGER/ABAM Engineers Inc.
Address 33301 Ninth Avenue South
Federal Way, WA 98003
Fax Number 206/431-2250
Telephone 206/431-2300

Total Number of Pages Transmitted *(Including Cover Sheet)* 7

Date Transmitted 5-13-98 Time Transmitted 2:10

Transmitted by [signature] BERGER/ABAM Job Number P98108

RE: WSU / WSDOT Split Column Tests

David,

In a recent conversation with one of your researchers, Paul Rogness, it came to my attention that the calculations and design drawings for the transverse loading specimen of the above referenced tests did not properly include the splice confinement. The methodology that we followed, that developed by the University of California at San Diego, explicitly calculates the confinement for reinforcement lap splice zones. However, this methodology also recognizes that confinement of rectangular splice zones with rectangular jackets is not entirely possible. Since your tests were conducted on such a configuration, and since this effect was one of the parameters that you were investigating, I calculated the numbers of Replark 30 wraps that would have been recommended for the tests of the splice zone. The attached calculations indicate that 11 or so wraps would have been required. We understand that the performance of the specimens with the 6 wraps that were provided was fairly good. We would expect that if 11 wraps had been used, the performance may have been somewhat better. Therefore, the results probably form a lower bound to the performance expected if the calculated number of wraps are used. I hope that this additional information can be of help to you. If you have any questions, please give me a call.

Regards,

Lee

BERGER/ABAM ENGINEERS INC

Project: Sumitomo Wrap — WSU Split Column Tests
Subject: Splice-Zone Confinement
Sheet 1 of 6
Job Number: F98108
Designer: LM
Date: 5/13/99

Jacket Thickness for equiv. circular column, (treat rectangular as equiv. circular col.)

$$t_j = 500 \frac{D(f_\ell - f_h)}{E_j}$$

$D \sim 16.33''$ equiv. dia. from prev. calc.

f_ℓ say 300 psi*
f_h assume = 0
$E_j = 33426$ ksi

$$t_j \sim \frac{500\,(16.33'')(300\ \text{psi})}{33426\ \text{ksi}\ (1000\ \text{psi/ksi})} = \underline{\underline{0.0733}}$$

Ref: ACTT-95/08 Earthquake Retrofit of Bridge Columns w/ Continuous Carbon Fiber Jackets §4

$$\#\ \text{wraps} = \frac{0.0733}{0.0066} = 11$$

Replace so 11 wraps reqd

---

* Calc. f_ℓ: $f_\ell = \dfrac{A_s f_y}{\left[\frac{p}{2n} + 2(d_b + cc)\right] L_s}$

p = inside crack perimeter
d_b = bar dia.
n = # of bars
cc = dr cover
L_s = splice length

approx. $p \sim 16.33 - 0.67(2)\pi = 15''$

$n = 10$ bars
$d_b = 0.375''$
$cc = 0.67''$
$L_s = 7.5''$ $(20 d_b)$

$A_s = 0.11(10) = 1.1\ \text{in}^2$
$f_y = 44$ ksi

$$f_\ell = \frac{44(1.1)}{\left[\frac{15}{2(10)} + 2(0.375 + 0.67)\right] 7.5} = 0.264\ \text{ksi}$$

use 300 psi OK

ACTT-95/08 Does not recommend using rectangular jackets on rectangular columns to confine splice zones. If some debonding is permissible in the splice zone, then rect. jackets may be effective. Also typically the calc. jacket thickness would be doubled, producing 0.14 in. or 22 wraps.

BERGER/ABAM ENGINEERS INC

Project: Sumitomo Wrap — WSU Split Column Tests
Subject: Splice Zone Confinement
Sheet: 2 of 6
Job Number: PG6105
Designer: LH
Date: 5/13/99

Alternate method of determining jacket thickness

Ref: Seismic Design & Retrofit of Bridges, Priestley, Seible, Calvi 1996 §8.2.2(b)(iii)

$$\rho_{sj} = 2\,\frac{(A_b f_s / \mu p l_s - f_l)}{0.0015\, E_j}$$

ACTT based on 0.001 ε so this is less conservative

$$f_l = \frac{A_b f_s}{\mu p l_s} = \frac{1.21 A_b f_{yl}}{p l_s}$$

$$f_l = \frac{1.21(1.1)40}{15(7.5)} = 0.47 \text{ ksi}$$

$$\rho_{sj} = \frac{2(0.47)}{0.0015\,(33425)} = 0.0189$$

$$\rho_s = 2 f_j \left[\frac{b+h}{bh}\right]$$

for rectangle

$$f_j = \frac{\rho_s}{2}\,\frac{bh}{[b+h]} = \frac{0.0189}{2}\,\frac{(7")13"}{(7"+13")}$$

$$f_j = 0.043 \text{ in}$$

$$\#\text{ wraps} = \frac{0.043}{0.0066} = 6.5$$

Replace 30 wraps reqd

Note: if use $f_l = 0.47$ → $\varepsilon = 0.0015$ (1st ACTT eqn)

$$f_j = \frac{540(16.33).47}{33425}\left(\frac{.001}{.0015}\right) = 0.077$$

$$\#\text{ wraps} = \frac{0.077}{0.0066} = 11.6 \text{ wraps}$$

- or about the same as before.

but ACTT method may be a better predictor since ρ_s as calc. for a rectangle is not truly applicable.

APPENDIX C

XXSYS RETROFIT DESIGN CALCULATIONS

XXSYS "CHOPSTICK DESIGN"

Column Specifications:

Column Height,	$L := 60$	(in)
Shear Span,	$L_e := 30$	(in)
Column Width,	$B := 13$	(in)
Column Depth,	$D := 7$	(in)
Concrete Cover,	$cc := 0.67$	(in)
Concrete Compressive Strength,	$f_c := 5000$	(psi)
Longitudinal Reinforcement 10 #3	$f_{yl} := 40$	(ksi)
Number of Bars	$n := 10$	
Bar Diameter	$d_b := 0.375$	(in)
Bar Area	$A_b := 0.11$	(in^2)
Steel Modulus	$E_s := 29000$	(ksi)
Transverse Reinforcement 0.12 @ 4 in.	$f_{yt} := 40$	(ksi)
Bar Diameter	$d_s := 0.12$	(in)
Bar Area	$A_s := 0.011$	(in^2)
Spacing	$s := 4$	(in)
Lap Splice Length,	$L_s := 7.5$	(in)

Section Properties:

Axial Load,	$P := 0$	(kips)
Moment Capacity,	$M_{yi} := 152.4$	(kip in)
Yield Curvature,	$\phi_y := 0.000426$	(1/in)
Neutral Axis Depth,	$c_u := 0.7$	(in)

Jacket Material Properties:

Jacket Modulus,	$E_j := 12000$	(ksi)
Ultimate Jacket Strength,	$f_{ju} := 120$	(ksi)
Ultimate Strain,	$\varepsilon_{ju} := 0.01$	(in/in)

Required Displacement Ductility: $\mu_\Delta := 8$

Shear Strength Retrofit:

Plastic shear including overstrength =

$$V_o := 1.5 \cdot \left(\frac{M_{yi}}{L_e} \right) \qquad V_o = 7.6 \quad \text{(kips)}$$

Concrete shear contribution =

$$k := \text{if}\left(\mu_\Delta < 2, 3, \text{if}\left(\mu_\Delta < 4, 5 - \mu_\Delta, \text{if}\left(\mu_\Delta < 8, 1.5 - \frac{\mu_\Delta}{8}, \text{if}\left(\mu_\Delta \geq 8, 0.5, 0.5\right)\right)\right)\right) \qquad k = 0.5$$

$$V_{ci} := k \cdot \sqrt{f_c} \cdot 0.8 \cdot (D \cdot B) \cdot 10^{-3} \qquad V_{ci} = 2.6 \quad \text{(kips)}$$

$$V_{co} := 3 \cdot \sqrt{f_c} \cdot 0.8 \cdot (D \cdot B) \cdot 10^{-3} \qquad V_{co} = 15.4 \quad \text{(kips)}$$

Hoop reinforcement shear contribution =

$$D_c := D - 2 \cdot cc + d_b$$

$$\theta := 45$$

$$\alpha := \theta \cdot \frac{\pi}{180} \quad \text{(change to radians)}$$

$$nbar := 2 \quad \text{(\# transverse bars)}$$

$$V_s := \frac{nbar \cdot A_s \cdot f_{yt} \cdot D_c}{s} \cdot \cot(\alpha) \qquad V_s = 1.3 \quad \text{(kips)}$$

Axial load shear contribution = $V_p := P \cdot \frac{D - c_u}{2 \cdot L_e}$ $\qquad V_p = 0 \quad \text{(kips)}$

Jacket thickness inside the plastic hinge region t_{ji} =

Strength reduction factor ϕ $\quad \phi := 0.85$

$$t_{vi} := \frac{125}{(E_j \cdot D)} \cdot \left[\frac{V_o}{\phi} - (V_{ci} + V_s + V_p) \right] \qquad t_{vi} = 0.008 \quad \text{(in)} \quad <<<<<<$$

Jacket thickness outside the plastic hinge region t_{jo} =

$$t_{vo} := \frac{125}{(E_j \cdot D)} \cdot \left[\frac{V_o}{\phi} - (V_{co} + V_s + V_p) \right] \qquad t_{vo} = -0.012 \quad \text{(in)} \quad <<<<<<$$

Flexural Plastic Hinge Confinement:

Equivalent column diameter D_e =

$$A := D$$

$$k := \left(\frac{A}{B}\right)^{\frac{2}{3}}$$

$$b := \sqrt{\left[\frac{A}{(2\cdot k)}\right]^2 + \left(\frac{B}{2}\right)^2}$$

$$a := k\cdot b$$

$$R_1 := \frac{b^2}{a}$$

$$R_2 := \frac{a^2}{b}$$

$$D_e := R_1 + R_2 \qquad D_e = 16.331 \quad \text{(in)}$$

Plastic hinge length = $L_p := L_e\cdot 0.08 + 0.15\cdot f_{yl}\cdot d_b$ $\qquad L_p = 4.7$ (in)

Curvature ductility demand =

$$\mu_\phi := 1 + \frac{\mu_\Delta - 1}{3\cdot\left(\frac{L_p}{L_e}\right)\cdot\left[1 - 0.5\cdot\left(\frac{L_p}{L_e}\right)\right]} \qquad \mu_\phi = 17$$

Required ultimate compression strain in the concrete =

$$\varepsilon_{cu} := \mu_\phi\cdot\phi_y\cdot c_u \qquad \varepsilon_{cu} = 0.0052$$

Jacket thickness t_{c1} and t_{c2} =

$$t_{c1} := \left[0.1\cdot\frac{D_e\cdot\left(\varepsilon_{cu} - 0.004\right)\cdot 1.5\cdot f_c}{f_{ju}\cdot\varepsilon_{ju}}\cdot 10^{-3}\right]\cdot 2 \qquad t_{c1} = 0.024 \quad \text{(in)} \quad <<<<<<$$

$$t_{c2} := \frac{t_{c1}}{2} \qquad t_{c2} = 0.012 \quad \text{(in)} \quad <<<<<<$$

Thickness to prevent bar buckling = $t_b := \frac{n\cdot D'}{E_j}$ $\qquad t_b = 0.006$ (in)

Jacket Specifications:

Shear Strength Component =

$L_{vi} := 1.5 \cdot D$ $\quad L_{vi} = 10.5$ (in) >>>>> $t_{vi} = 0.008$ (in)

$L_{vo} := L - 2 \cdot L_{vi}$ $\quad L_{vo} = 39$ (in) >>>>> $t_{vo} = -0.012$ (in)

Confinement Component =

$L_{c1} := \text{if}\left(0.5 \cdot D \geq 0.125 \cdot L_e, 0.5 \cdot D, 0.125 \cdot L_e\right)$ $\quad L_{c1} = 3.75$ (in) >>>>> $t_{c1} = 0.024$ (in)

$L_{c2} := \text{if}\left(0.5 \cdot D \geq 0.125 \cdot L_e, 0.5 \cdot D, 0.125 \cdot L_e\right)$ $\quad L_{c2} = 3.75$ (in) >>>>> $t_{c2} = 0.012$ (in)

$t_b = 0.006$ (in)

EVALUATION RELEASE OF SEQMC MAY NOT BE UTILIZED FOR PRODUCTION.
For license information contact: SC Solutions, 3211 Scott Blvd., Santa Clara, CA 95054, (408) 486-6060

SECTION PROPERTIES:

Section Depth	= 7.0 in.
Section Width	= 13.0 in.
Cover to Main Steel	= 0.7 in.
Concrete Model	= Mander (no tensile strength)
Concrete Strength	= 5.00 ksi
Steel Model	= Mild Strength Steel
Steel Strength	= 40.0 ksi
Young's Modulus	= 29000.0 ksi
Tension Side Reinforcement	= 4 Bars (#3 Bars)
Compression Side Reinforcement	= 4 Bars (#3 Bars)
Side Reinforcement	= 1 Bars (#3 Bars) each side
Hoop Size	= 0.12 Bars
Hoop Spacing	= 4.0 in.
Average Number of Legs	= 2.0
Hoop Strength	= 40.0 ksi

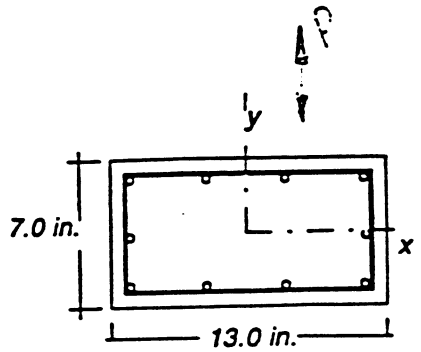

MOMENT CURVATURE ANALYSIS RESULTS:

The Ideal Moment Capacity is based on the concrete strain of 0.004.

Applied Axial Load	= 0.0 Kips	Ag	= 91.0 sq.in
Eleff	= 2.49e+03 Kips sq.ft	Ig	= 3.72e+02 in^4
Curvature Ductility	= 13.9	Ieff	= 8.43e+01 in^4

Moment Curvature Plot

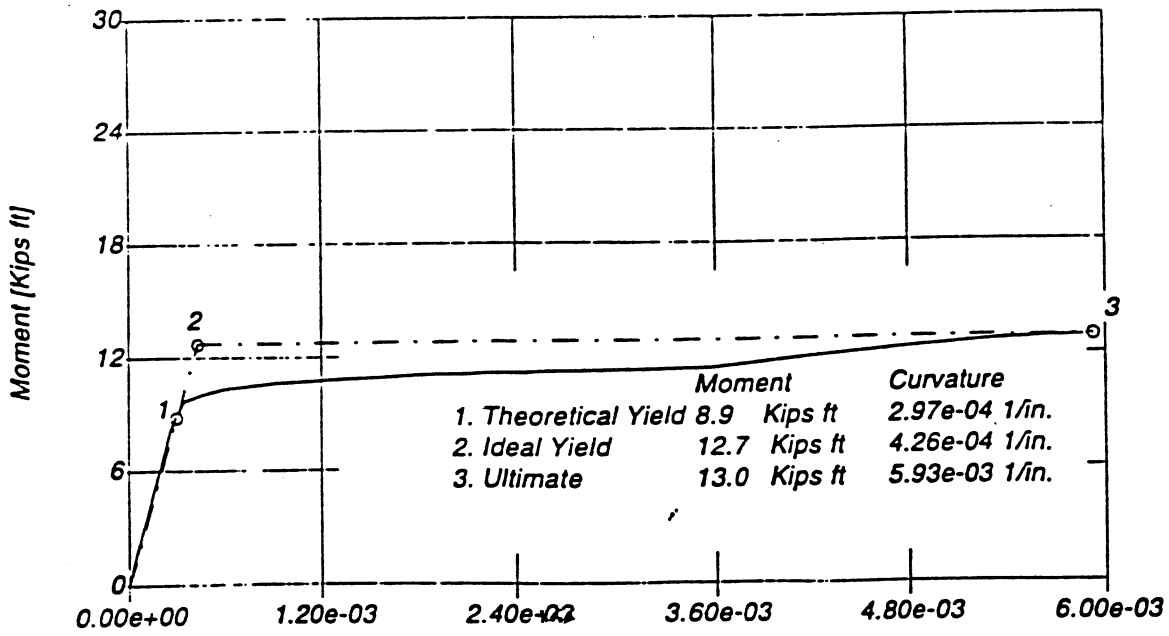

EVALUATION RELEASE OF SEQMC MAY NOT BE UTILIZED FOR PRODUCTION.

Conc. Strain	N.A. Depth	Steel Strain	Moment Cap.	Curvature	
0.0001	1.5 in.	-0.00030	2.1 Kips ft	6.55e-05 1/in.	
0.0002	1.5 in.	-0.00060	4.1 Kips ft	1.31e-04 1/in.	
0.0003	1.5 in.	-0.00091	6.2 Kips ft	1.96e-04 1/in.	
0.0004	1.5 in.	-0.00121	8.3 Kips ft	2.62e-04 1/in.	
0.0005	1.5 in.	-0.00161	9.7 Kips ft	3.44e-04 1/in.	__Yield
0.0006	1.3 in.	-0.00224	10.1 Kips ft	4.63e-04 1/in.	
0.0007	1.2 in.	-0.00297	10.3 Kips ft	5.97e-04 1/in.	
0.0008	1.1 in.	-0.00377	10.5 Kips ft	7.44e-04 1/in.	
0.0009	1.0 in.	-0.00463	10.6 Kips ft	9.00e-04 1/in.	
0.0010	0.9 in.	-0.00553	10.7 Kips ft	1.06e-03 1/in.	
0.0011	0.9 in.	-0.00646	10.8 Kips ft	1.23e-03 1/in.	
0.0012	0.9 in.	-0.00741	10.9 Kips ft	1.40e-03 1/in.	
0.0013	0.8 in.	-0.00838	11.0 Kips ft	1.58e-03 1/in.	
0.0014	0.8 in.	-0.00935	11.0 Kips ft	1.75e-03 1/in.	
0.0015	0.8 in.	-0.01032	11.1 Kips ft	1.92e-03 1/in.	
0.0016	0.8 in.	-0.01128	11.1 Kips ft	2.10e-03 1/in.	
0.0017	0.7 in.	-0.01224	11.2 Kips ft	2.27e-03 1/in.	
0.0018	0.7 in.	-0.01319	11.2 Kips ft	2.44e-03 1/in.	
0.0019	0.7 in.	-0.01412	11.2 Kips ft	2.61e-03 1/in.	
0.0020	0.7 in.	-0.01503	11.2 Kips ft	2.77e-03 1/in.	
0.0025	0.7 in.	-0.01936	11.3 Kips ft	3.56e-03 1/in.	
0.0030	0.7 in.	-0.02290	12.0 Kips ft	4.22e-03 1/in.	
0.0035	0.7 in.	-0.02613	12.4 Kips ft	4.82e-03 1/in.	
0.0040	0.7 in.	-0.02913	12.7 Kips ft	5.39e-03 1/in.	
0.0045	0.8 in.	-0.03192	13.0 Kips ft	5.93e-03 1/in.	

Ultimate concrete strain was exceeded.

"Chopsticks" Design – Part 2

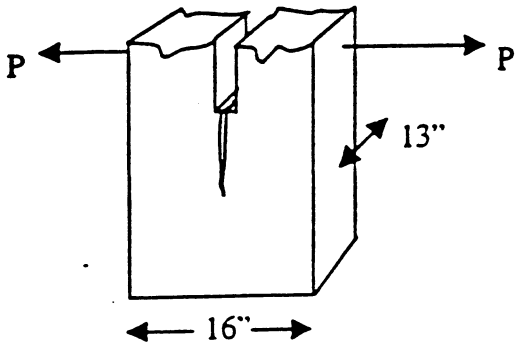

Goal: limit crack width to 1 mm in the 16" x 13" wide section to assure aggregate interlock in the concrete.

1) 1 mm x 1 in/25.4 mm = .03937" total crack width in concrete section

2) This crack width spread over the 16" wide section would be:
.03937"/16" = .00246 in/in of width = .246% strain = the strain limit in composite

3) Now, using: $\sigma_{applied} = \varepsilon E$
then: $\sigma_{applied} = (.00246)(12{,}000{,}000)$
$= 29{,}520$ lbs/in^2 would be developed in the composite at that strain level.

4) Using a material with a strength of 120,000 lb/in^2, we would need 29,520/120,000 or .246 in^2 of material to restrain the concrete.

5) If this area was spread out over 6", it would be .041" thick (.246in^2/6" = .041")
Over 12", it would be .0205" thick.

6) Therefore, as a safe design that both restrains the crack and allows for a smooth transition of load resistance, we will apply (2) layers of .0266" thick GA180 fabric to the column: (1) 12" wide section overlaid by a (1) 6"-wide section applied to the top 6". The bottom 6" would have a thickness of .0266" and the top 6" would have a thickness of .0532".

XXSYS "GROUTED" COLUMN DESIGN

Column Specifications:

Column Height,	$L := 104$	(in)
Shear Span,	$L_e := 104$	(in)
Column Width,	$B := 16$	(in)
Column Depth,	$D := 13$	(in)
Concrete Cover,	$cc := 0.67$	(in)
Concrete Compressive Strength,	$f_c := 5000$	(psi)
Longitudinal Reinforcement 20 #3	$f_{yl} := 40$	(ksi)
Number of Bars	$n := 16$	
Bar Diameter	$d_b := 0.375$	(in)
Bar Area	$A_b := 0.11$	(in^2)
Steel Modulus	$E_s := 29000$	(ksi)
Transverse Reinforcement 0.12 @ 4 in.	$f_{yt} := 40$	(ksi)
Bar Diameter	$d_s := 0.12$	(in)
Bar Area	$A_s := 0.011$	(in^2)
Spacing	$s := 4$	(in)
Lap Splice Length,	$L_s := 7.5$	(in)

Section Properties:

Axial Load,	$P := 0$	(kips)
Moment Capacity,	$M_{yi} := 547.2$	(kip in)
Yield Curvature,	$\phi_y := 0.000235$	(1/in)
Neutral Axis Depth,	$c_u := 0.9$	(in)

Jacket Material Properties:

Jacket Modulus,	$E_j := 12000$	(ksi)
Ultimate Jacket Strength,	$f_{ju} := 120$	(ksi)
Ultimate Strain,	$\varepsilon_{ju} := 0.01$	(in/in)

Required Displacement Ductility: $\mu_\Delta := 8$

Shear Strength Retrofit:

Plastic shear including overstrength =

$$V_o := 1.5 \cdot \left(\frac{M_{yi}}{L_e} \right) \qquad V_o = 7.9 \quad \text{(kips)}$$

Concrete shear contribution =

$$k := \text{if}\left(\mu_\Delta < 2, 3, \text{if}\left(\mu_\Delta < 4, 5 - \mu_\Delta, \text{if}\left(\mu_\Delta < 8, 1.5 - \frac{\mu_\Delta}{8}, \text{if}\left(\mu_\Delta \geq 8, 0.5, 0.5\right)\right)\right)\right) \qquad k = 0.5$$

$$V_{ci} := k \cdot \sqrt{f_c} \cdot 0.8 \cdot (D \cdot B) \cdot 10^{-3} \qquad V_{ci} = 5.9 \quad \text{(kips)}$$

$$V_{co} := 3 \cdot \sqrt{f_c} \cdot 0.8 \cdot (D \cdot B) \cdot 10^{-3} \qquad V_{co} = 35.3 \quad \text{(kips)}$$

Hoop reinforcement shear contribution =

$$D_c := D - 2 \cdot cc + d_b$$

$$\theta := 45$$

$$\alpha := \theta \cdot \frac{\pi}{180} \quad \text{(change to radians)}$$

nbar := 2 (# transverse bars)

$$V_s := \frac{nbar \cdot A_s \cdot f_{yt} \cdot D_c}{s} \cdot \cot(\alpha) \qquad V_s = 2.6 \quad \text{(kips)}$$

Axial load shear contribution = $V_p := P \cdot \frac{D - c_u}{2 \cdot L_e}$ $V_p = 0$ (kips)

Jacket thickness inside the plastic hinge region t_{ji} =

Strength reduction factor ϕ $\phi := 0.85$

$$t_{vi} := \frac{125}{(E_j \cdot D)} \cdot \left[\frac{V_o}{\phi} - (V_{ci} + V_s + V_p) \right] \qquad t_{vi} = 6.044 \cdot 10^{-4} \text{ (in)} \quad <<<<<<$$

Jacket thickness outside the plastic hinge region t_{jo} =

$$t_{vo} := \frac{125}{(E_j \cdot D)} \cdot \left[\frac{V_o}{\phi} - (V_{co} + V_s + V_p) \right] \qquad t_{vo} = -0.023 \quad \text{(in)} \quad <<<<<<$$

Flexural Plastic Hinge Confinement:

Equivalent column diameter D_e =

$$A := D$$

$$k := \left(\frac{A}{B}\right)^{\frac{2}{3}}$$

$$b := \sqrt{\left[\frac{A}{(2\cdot k)}\right]^2 + \left(\frac{B}{2}\right)^2}$$

$$a := k\cdot b$$

$$R_1 := \frac{b^2}{a}$$

$$R_2 := \frac{a^2}{b}$$

$$D_e := R_1 + R_2 \qquad D_e = 20.862 \quad \text{(in)}$$

Plastic hinge length = $L_p := L_e\cdot 0.08 + 0.15\cdot f_{yl}\cdot d_b$ $\qquad L_p = 10.6$ (in)

Curvature ductility demand =

$$\mu_\phi := 1 + \frac{\mu_\Delta - 1}{3\cdot\left(\frac{L_p}{L_e}\right)\cdot\left[1 - 0.5\cdot\left(\frac{L_p}{L_e}\right)\right]} \qquad \mu_\phi = 25$$

Required ultimate compression strain in the concrete =

$$\varepsilon_{cu} := \mu_\phi\cdot\phi_y\cdot c_u \qquad \varepsilon_{cu} = 0.0053$$

Jacket thickness t_{c1} and t_{c2} =

$$t_{c1} := \left[0.1\cdot\frac{D_e\cdot\left(\varepsilon_{cu} - 0.004\right)\cdot 1.5\cdot f_c}{f_{ju}\cdot\varepsilon_{ju}}\cdot 10^{-3}\right]\cdot 2 \qquad t_{c1} = 0.035 \quad \text{(in)} \quad <<<<<<$$

$$t_{c2} := \frac{t_{c1}}{2} \qquad t_{c2} = 0.017 \quad \text{(in)} \quad <<<<<<$$

Thickness to prevent bar buckling = $t_b := \frac{n\cdot D'}{E_j}$ $\qquad t_b = 0.017$ (in)

Lap Splice Clamping:

Available lateral clamping pressure =

$$f_h := 0 \qquad f_h = 0 \quad \text{(ksi)}$$

Required clamping pressure =

$$dd := \left[D - 2 \cdot \left(d_b + cc \right) \right]$$

$$bb := \left[B - 2 \cdot \left(d_b + cc \right) \right]$$

$$p := 2 \cdot (dd + bb)$$

$$f_l := \frac{A_b \cdot f_{yl}}{\left[\frac{p}{2 \cdot n} + 2 \cdot \left(d_b + cc \right) \right] \cdot L_s} \qquad f_l = 0.161 \quad \text{(ksi)}$$

Required jacket thickness =

$$t_s := \left[500 \cdot \left(\frac{D_e}{E_j} \right) \cdot \left(f_l - f_h \right) \right] \cdot 2 \qquad t_s = 0.28 \quad \text{(in)} \quad <<<<<<$$

Jacket Specifications:

Shear Strength Component =

$L_{vi} := 1.5 \cdot D$ $\quad L_{vi} = 19.5$ (in) >>>>> $t_{vi} = 6.044 \cdot 10^{-1}$ (in)

$L_{vo} := L - 2 \cdot L_{vi}$ $\quad L_{vo} = 65$ (in) >>>>> $t_{vo} = -0.023$ (in)

Confinement Component =

$L_{c1} := \text{if}\left(0.5 \cdot D \geq 0.125 \cdot L_e, 0.5 \cdot D, 0.125 \cdot L_e\right)$ $\quad L_{c1} = 13$ (in) >>>>> $t_{c1} = 0.035$ (in)

$L_{c2} := \text{if}\left(0.5 \cdot D \geq 0.125 \cdot L_e, 0.5 \cdot D, 0.125 \cdot L_e\right)$ $\quad L_{c2} = 13$ (in) >>>>> $t_{c2} = 0.017$ (in)

$t_b = 0.017$ (in)

EVALUATION RELEASE OF SEQMC MAY NOT BE UTILIZED FOR PRODUCTION.
For license information contact: SC Solutions, 3211 Scott Blvd., Santa Clara, CA 95054, (408) 486-6060

SECTION PROPERTIES:

Section Depth	*= 13.0 in.*
Section Width	*= 16.0 in.*
Cover to Main Steel	*= 0.7 in.*
Concrete Model	*= Mander (no tensile strength)*
Concrete Strength	*= 5.00 ksi*
Steel Model	*= Mild Strength Steel*
Steel Strength	*= 40.0 ksi*
Young's Modulus	*= 29000.0 ksi*
Tension Side Reinforcement	*= 6 Bars (#3 Bars)*
Compression Side Reinforcement	*= 6 Bars (#3 Bars)*
Side Reinforcement	*= 2 Bars (#3 Bars) each side*

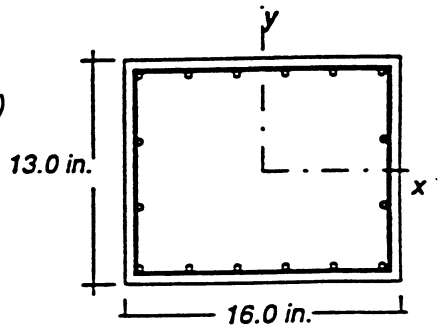

Hoop Size	*= 0.12 Bars*	*Average Number of Legs*	*= 2.0*
Hoop Spacing	*= 4.0 in.*	*Hoop Strength*	*= 40.0 ksi*

MOMENT CURVATURE ANALYSIS RESULTS:

The Ideal Moment Capacity is based on the concrete strain of 0.004.

Applied Axial Load	*= 0.0 Kips*	*Ag*	*= 208.0 sq.in*
Eleff	*= 1.62e+04 Kips sq.ft*	*Ig*	*= 2.93e+03 in^4*
Curvature Ductility	*= 21.6*	*Ieff*	*= 5.48e+02 in^4*

Moment Curvature Plot

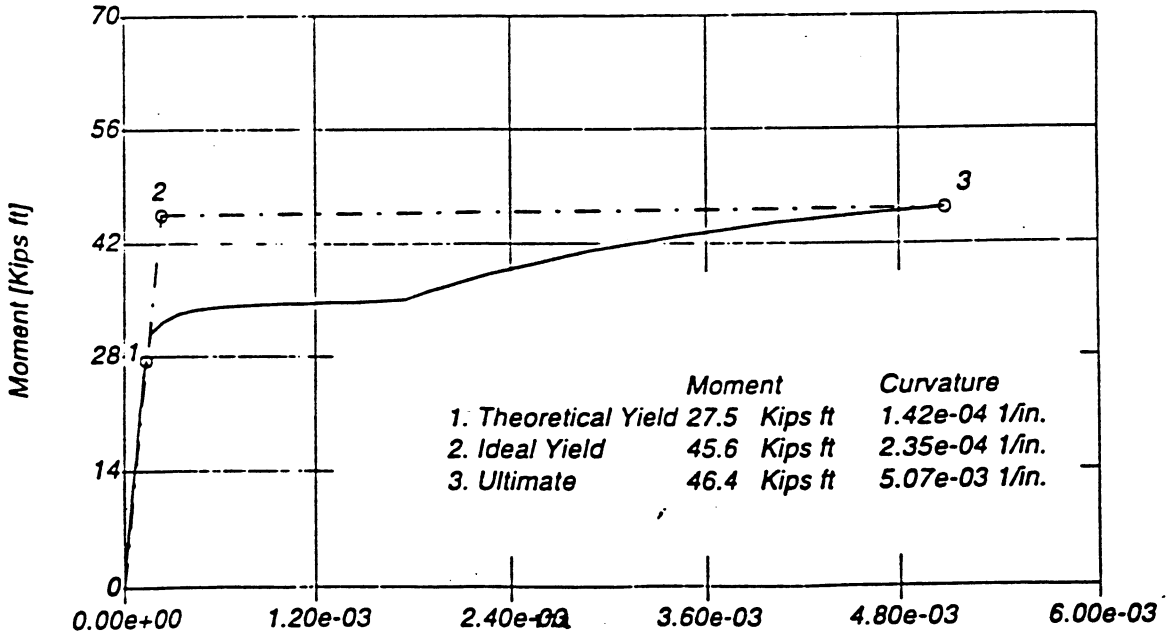

EVALUATION RELEASE OF SEQMC MAY NOT BE UTILIZED FOR PRODUCTION.

Conc. Strain	N.A. Depth	Steel Strain	Moment Cap.	Curvature	
0.0001	2.5 in.	-0.00039	8.4 Kips ft	4.02e-05 1/in.	
0.0002	2.5 in.	-0.00078	16.8 Kips ft	8.05e-05 1/in.	
0.0003	2.5 in.	-0.00116	25.2 Kips ft	1.21e-04 1/in.	
0.0004	2.3 in.	-0.00170	31.0 Kips ft	1.73e-04 1/in.	__Yield
0.0005	2.0 in.	-0.00256	32.5 Kips ft	2.52e-04 1/in.	
0.0006	1.7 in.	-0.00360	33.3 Kips ft	3.46e-04 1/in.	
0.0007	1.5 in.	-0.00482	33.8 Kips ft	4.55e-04 1/in.	
0.0008	1.4 in.	-0.00618	34.1 Kips ft	5.75e-04 1/in.	
0.0009	1.3 in.	-0.00767	34.3 Kips ft	7.06e-04 1/in.	
0.0010	1.2 in.	-0.00926	34.5 Kips ft	8.45e-04 1/in.	
0.0011	1.1 in.	-0.01093	34.6 Kips ft	9.91e-04 1/in.	
0.0012	1.1 in.	-0.01264	34.7 Kips ft	1.14e-03 1/in.	
0.0013	1.0 in.	-0.01440	34.8 Kips ft	1.29e-03 1/in.	
0.0014	1.0 in.	-0.01619	34.9 Kips ft	1.45e-03 1/in.	
0.0015	0.9 in.	-0.01798	35.0 Kips ft	1.60e-03 1/in.	
0.0016	0.9 in.	-0.01968	35.2 Kips ft	1.75e-03 1/in.	
0.0017	0.9 in.	-0.02128	36.2 Kips ft	1.89e-03 1/in.	
0.0018	0.9 in.	-0.02275	36.9 Kips ft	2.02e-03 1/in.	
0.0019	0.9 in.	-0.02422	37.7 Kips ft	2.15e-03 1/in.	
0.0020	0.9 in.	-0.02567	38.4 Kips ft	2.28e-03 1/in.	
0.0025	0.9 in.	-0.03266	41.2 Kips ft	2.90e-03 1/in.	
0.0030	0.9 in.	-0.03927	43.2 Kips ft	3.48e-03 1/in.	
0.0035	0.9 in.	-0.04548	44.6 Kips ft	4.03e-03 1/in.	
0.0040	0.9 in.	-0.05141	45.6 Kips ft	4.56e-03 1/in.	
0.0045	0.9 in.	-0.05708	46.4 Kips ft	5.07e-03 1/in.	

Ultimate concrete strain was exceeded.

Composite Lay-up for WSU Split Column Tests

Out-of-Phase, Longitudinal Loading, Double Bending ("Chopsticks")

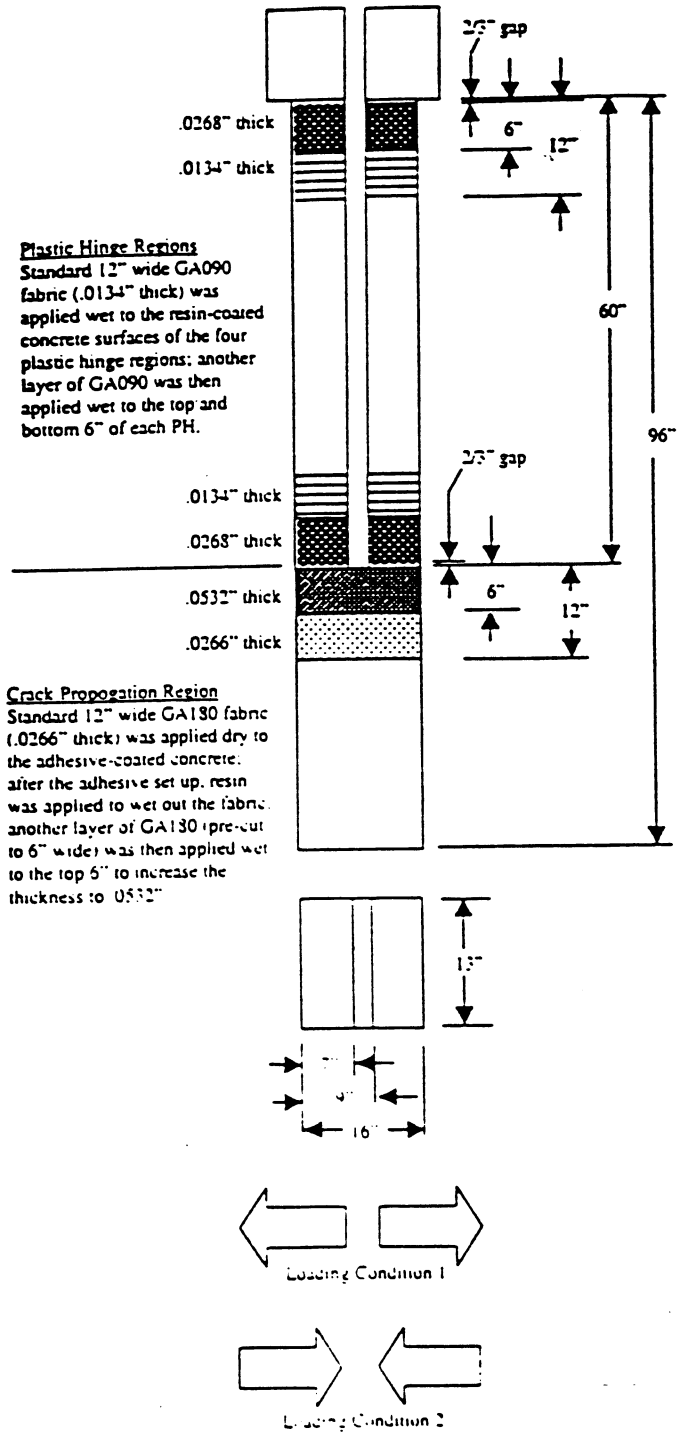

Plastic Hinge Regions
Standard 12" wide GA090 fabric (.0134" thick) was applied wet to the resin-coated concrete surfaces of the four plastic hinge regions; another layer of GA090 was then applied wet to the top and bottom 6" of each PH.

Crack Propogation Region
Standard 12" wide GA180 fabric (.0266" thick) was applied dry to the adhesive-coated concrete; after the adhesive set up, resin was applied to wet out the fabric; another layer of GA130 (pre-cut to 6" wide) was then applied wet to the top 6" to increase the thickness to .0532"

Transverse Loading, Single Bending ("Grouted")

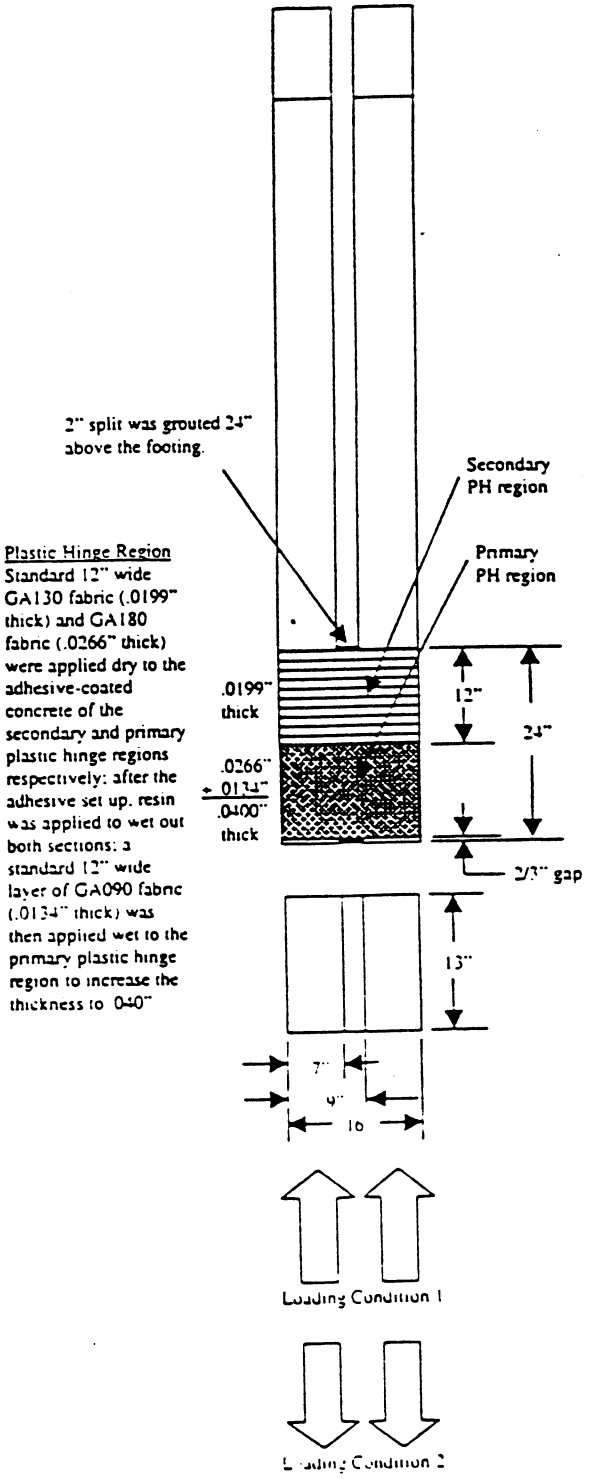

Plastic Hinge Region
Standard 12" wide GA130 fabric (.0199" thick) and GA180 fabric (.0266" thick) were applied dry to the adhesive-coated concrete of the secondary and primary plastic hinge regions respectively; after the adhesive set up, resin was applied to wet out both sections; a standard 12" wide layer of GA090 fabric (.0134" thick) was then applied wet to the primary plastic hinge region to increase the thickness to .040"

Quantities of products used to construct the lay-ups

Carbon Fiber Fabric	*"Chopsticks"* Plastic Hinges (4 places)	*"Chopsticks"* Crack	*"Grouted"* Plastic Hinge
GA090 8.9 oz/yd^2 .0134" thick	(1) 47¼ x 12" (1) 47¼" x 6"	–	(1) 65" x 12" (lower 12")
GA130 13.2 oz/yd^2 .0199" thick	–	–	(1) 65" x 12" (upper 12")
GA180 17.7 oz/yd^2 .0266" thick	–	(1) 65" x 12" (1) 65" x 6"	(1) 65" x 12" (lower 12")

(all fabrics are 12K, all come 12" wide standard (6" wide sections had to be cut), thickness assumes 50% V_f)

Adhesive	*"Chopsticks"* Plastic Hinges (4 places)	*"Chopsticks"* Crack	*"Grouted"* Plastic Hinge
Bondtite R37	not used	1.210 lbs.	2.37 lbs.
Bondtite H37	not used	.403 lbs.	.79 lbs.

(3:1 mix ratio; coverage rate: .333lbs/ft^2)

Resin	*"Chopsticks"* Plastic Hinges (4 places)	*"Chopsticks"* Crack	*"Grouted"* Plastic Hinge
826	(2) 2.274 lbs.	2.178 lbs.	3.18 lbs.
3379	(2) 1.170 lbs.	1.122 lbs.	1.62 lbs.

Note: 2 kits of the size shown were made to wet out the "Chopsticks" PH regions - 1 kit was made for the two "bottom" PHs and another kit was made for the two "top" PHs. Since the "top" PHs were the last to be applied and wetted out, an additional .379 lbs. of 826 and .195 lbs. of 3379 were added to the kit in order to have some resin left over to wet out any "dry" or "drier looking" areas on either test column. As it turned out, this extra resin wasn't really needed, but was applied anyway.