IENT

Traffic Barrier Systems

Service Level 1 Bridge Rail

WA-RD 106.1

Initial Report
January 1987

Washington State Department of Transportation
Planning, Research and Public Transportation Division
in cooperation with the
United States Department of Transportation
Federal Highway Administration

Washington State Department of Transportation

Duane Berentson, Secretary
A.D. Andreas, Deputy Secretary
James P. Toohey, Assistant Secretary for Planning, Research and Public Transportation

Washington State Transportation Commission Research Committee
William O. Kamps, Chair
Richard Odabashian, Commissioner
Jerry Overton, Commissioner
Leo B. Sweeney, Commissioner

WSDOT Research Executive Committee
A.D. Andreas, Chair, Deputy Secretary for Transportation
E.W. Ferguson, Administrator, District 4
H. W. Parker, Assistant Secretary for Marine Transportation
Robert C. Schuster, Assistant Secretary for Highways
James P. Toohey, Assist. Sec. for Plan'g, Research & Public Transp.

WSDOT Research Technical Committees

Highway Operations and Development
Roland Cook, Chair, District 2 Administrator
John Aspaas, District 4 Project Engineer
William P. Carr, Associate Research Director
John Conrad, District 1 Operations Engineer
Rich Darnell, District 3 Maintenance & Operations Engineer
C. Stewart Gloyd, Bridge/Structures Engineer
Wayne Gruen, State Traffic Engineer
Stan Moon, Location/Design Engineer
Ed Schlect, Construction Engineer - Paving
Don Senn, District 2 Location/Construction Engineer
Dick Shroll, District 6 Maintenance Superintendent
Ken Thomas, Operations Engineer, Bellingham Public Works Department
George Tsiatis, Structural Engineer, WSU

Materials and Product Evaluation
Del Vandehey, Chair, State Construction Engineer
Keith W. Anderson, Research Specialist
Jim Buss, District 5 Assistant Construction Engineer
Newton Jackson, Pavement/Soils Engineer
Steve Kramer, Assistant Professor, Civil Engineering, UW
Bob Krier, Bridge Operations Engineer
Art Peters, Materials Engineer
Bob Spratt, District 2 Maintenance Engineer
John Strada, Construction Engineer - Grading

Planning and Multimodal
Don Tranum, Chair, District 6 Administrator
Ron Anderson, Manager, District 6 Management Services
Ken Casavant, Professor, Washington State University
King Cushman, Director, Pierce County Transit Development
John Doyle, Manager, Economics Branch
Kris Gupta, Manager, Transportation Data Office
Kern Jacobson, District 1 Public Transportation & Planning Engineer
Jerry Lenzi, Manager, Multi Modal Branch
Jim Slakey, Manager, Public Transportation
Stephen Smith, Service Planning Manager, Ferry System, Colman Dock

WSDOT Research Implementation Committee
Stan Moon, Chair, Location/Design Engineer
Jack E. Hanson, Assistant Location Engineer
Dennis Ingham, Highway Maintenance Engineer
Kern Jacobson, District 1 Public Transportation & Planning Engineer
Bob Krier, Bridge Operations Engineer
Art Peters, Materials Engineer
Ed Schlect, Construction Engineer
Gerald Smith, District 1, Assistant I-90 Construction Engineer
Bob Spratt, District 2 Maintenance Engineer

WSDOT Research Office
G. Scott Rutherford, Director
William P. Carr, Associate Director
Keith W. Anderson, Federal Program Manager
Julie Leverson, Database Coordinator
Ellen Loyer, Secretary
Carl Toney, Research Administrator
Cynthia Wallace, Clerk-Typist

WSDOT Research Liaisons

District 1 - Kern Jacobson, Public Transportation & Planning Engineer
District 2 - Don Senn, Location/Construction Engineer
District 3 - Bob George, Assistant Location Engineer
District 4 - Richard N. Coffman, Maintenance Engineer
District 5 - Robert MacNeil, Design Engineer
District 6 - Richard Larson, Design and Planning Engineer
WSDOT Library - Barbara Russo, Librarian

Transportation Research Council

Transportation Commission
Vaughn Hubbard, Chair
William J. Kamps*#
Richard Odabashian*
Jerry B. Overton
Albert D. Rosellini
Bernice Stern
Leo B. Sweeney*

* Research Committee # Research Committee Chair

Federal Highway Administration
Paul C. Gregson, Division Administrator

Private Sector
Milton "Bud" Egbers, President, Skagit Valley Trucking
Richard Ford, Managing Partner, Preston Thorgrimson, Ellis, Holman
William Francis, Vice President, Burlington Northern R.R.
Tom Gaetz, Project Manager, David Mowat & Company, Bellevue
Lawrence Houk, Vice President, Lockheed Shipbuilding
Charles H. Knight, President, Concrete Technology
H. Carl Munson, VP for Strategic Planning, Boeing Company, Seattle
Michael Murphy, President, Central Pre-Mix Concrete
Richard Norman, President, Associated Sand & Gravel, Everett
John Ostrowski, Public Works Director, Vancouver, WA
Richard S. Page, President, Washington Roundtable
James D. Ray, Senior Manager, IBM Company
Sudarshan Sathe, Director, Technical Services, Polycarb Inc., Cleveland, OH
Paul Turvill, General Manager, PACCAR, Mt.Vernon, WA
Alva Williams, Director, Public Works, Olympia

Universities

Gene L. Woodruff, Vice Provost for Research, UW
Neil M. Hawkins, Professor & Chair, Civil Engineering, UW
Robert V. Smith, Associate Provost for Research, WSU
Surinder K. Bhagat, Professor & Chair, Civil Engineering,WSU

Washington State Department of Transportation
Duane Berentson, Secretary

A.D. Andreas, Deputy Secretary
C.W. Beeman, District 5 Administrator
R.E. Bockstruck, District 1 Administrator
J.L. Clemen, Assistant Secretary for Management Services
R.C. Cook, District 2 Administrator
R.L. Daniels, Administrator, Public Affairs Office
J. Doyle, Manager, Economics
E.W. Ferguson, District 4 Administrator
W. H. Hamilton, Assistant Secretary for Aeronautics
W.I. Hordan, State Aid Engineer
H. W. Parker, Assistant Secretary , Marine Transportation
R.C. Schuster, Assistant Secretary for Highways
J.H. Slakey, Manager, Public Transportation Office
J.P. Toohey, Asst. Sectry for Plng, Res., and Pub. Transportation
M.D. Tranum, District 6 Administrator
D.J. Vandehey, State Construction Engineer
J.D. Zirkle, District 3 Administrator

Representative George Walk, Chair - Legisl. Transportation Committee

Federal Highway Administration
M. Eldon Green, Regional Administrator
Otis C. Haselton, Research and T2 Engineer
Ernest J. Valach, Director, Planning and Program Development

Division Office
Paul C. Gregson, Division Administrator
Barry Brecto, Programming and T2 Engineer
Charles W. Chappell, Division Transportation Planner

Washington State Transportation Center (UW & WSU)

G. Scott Rutherford, Director
Ken Casavant, Associate Director, WSU
Joe P. Mahoney, Associate Director, UW
Khossrow Babaei, Senior Research Engineer
Rhonda Brooks, Research Implementation Manager
Mark Hallenbeck, Senior Research Engineer
Ed McCormack, Research Engineer
Amy O'Brien, Coordinator
Bev Odegaard, Budget Analyst
Ron Porter, Word Processing Technician
Cy Ulberg, Senior Research Engineer
Duane Wright, Research Aid

TECHNICAL REPORT STANDARD TITLE PAGE

1. Report No. 106.1	2. Government Accession No.	3. Recipient's Catalog No.
4. Title and Subtitle TRAFFIC BARRIER SYSTEMS SERVICE LEVEL 1 (SL-1) BRIDGE RAIL		5. Report Date January 1987
		6. Performing Organization Code
7. Author(s) Don Gripne		8. Performing Organization Report No. FHWA Demonstration Project No. 64
9. Performing Organization Name and Address Washington State Department of Transportation Olympia, WA 98504		10. Work Unit No.
		11. Contract or Grant No. GC 7740
12. Sponsoring Agency Name and Address U. S. Department of Transportation Federal Highway Administration		13. Type of Report and Period Covered Interim Dec. 1985 to Jan 1987
		14. Sponsoring Agency Code

15. Supplementary Notes
This study was conducted in cooperation with the U.S. Department of Transportation Federal Highway Administration.

16. Abstract
The Washington State Department of Transportation (WSDOT) designed and installed Service Level 1 (SL-1) bridge rails on three treated timber bridges in the state. To date there have been no accidents or maintenance problems reported at any of the modified bridges.

17. Key Words Bridge rail modification Rail for Timber bridge	18. Distribution Statement

19. Security Classif. (of this report) Unclassified	20. Security Classif. (of this page) Unclassified	21. No. of Pages 38	22. Price

Form DOT F 1700.7 (8-69)
DOT FORM 341-004 6/72

TRAFFIC BARRIER SYSTEMS

SERVICE LEVEL 1 (SL-1)

BRIDGE RAIL

by

Don Gripne
Project Development Office

Initial Report

FHWA Demonstration Project No. 64

Prepared for
Washington State Department of Transportation
and in Cooperation With
U. S. Department of Transportation
Federal Highway Administration

January 1987

DISCLAIMER

TABLE OF CONTENTS

RAIL PERFORMANCE

To date there have been no accidents or maintenance problems reported at any of the modified bridges.

Maintenance personnel have expressed their liking for the SL-1 rail since it will cause little or no damage to the bridge when struck. The replacement of the wooden rail required extensive work when struck.

ADDITIONAL RESEARCH

Wood posts as an alternative to the G-2 posts for the approach rail needs to be investigated.

CONTACT PERSON

The principal investigator of the project is:

Don J. Gripne
Design Standards Engineer
Washington State Department of Transportation
Olympia, WA 98504
(206) 753-0826

STUDY SITE AND DESIGN

This demonstration project, consisting of the installation of a Service Level 1 (SL-1) railing system on timber bridges, has been completed on the three bridges that were selected for the study. The Middle Nemah River Bridge and the Jorgenson Slough Bridge are located on SR 101 and the Coulter Creek Bridge is located on SR 106, all in western Washington (see vicinity maps).

Below are data of these bridges:

Bridge Name	Middle Nemah River
Bridge No.	101/31 M.P. 33.8
Life Expectancy	1995
ADT	2250
Accident Experience	None
Width	Twenty-eight feet
Appr. Rdwy. Width	Twenty-four w/ two-foot asphalt shoulders
Bridge Length/Type	Eighty-six feet/creosote treated Timber trestle
Average Operating Speed	55 MPH
Vehicle Mix	13% Trucks
Completion Date of SL-1 Installation	Dec. 31, 1985

Bridge Name	Jorgenson Slough
Bridge No.	101/33 M.P. 34.3
Life Expectancy	1994
ADT	2250
Accident Experience	None
Width	Twenty-eight feet
Appr. Rdwy. Width	Twenty-four feet w/two-foot shoulders
Bridge Length/Type	Seventy feet/timber treated Longitudinal laminated deck
Average Operating Speed	55 MPH
Vehicle Mix	13% Trucks
Completion Date of SL-1 Installation	Dec. 31, 1985

PURPOSE

The Service Level-1 (SL-1) Bridge Rail was designed to function adequately and to be cost-effective when compared to conventional longitudinal barriers. The purpose of this demonstration project is to determine if these design goals can be achieved and to identify any modifications that could improve field performance.

The SL-1 system was developed and tested for the FHWA by Southwest Research Institute. The Demonstration Projects Division of the FHWA wanted to verify the laboratory tests under actual field conditions and to obtain installation, performance, and maintenance data for this barrier system.

The purpose of this demonstration project is to show the feasibility and practicability of installing an SL-1 system on timber bridges and to perform an in-service evaluation to obtain maintenance costs and identify any design deficiencies.

The SL-1 systems were installed on low-volume state highways at sites suggested by the WSDOT and approved by the FHWA, Washington Division.

VICINITY MAP

Jorgenson Slough and Middle Nemah River Bridge

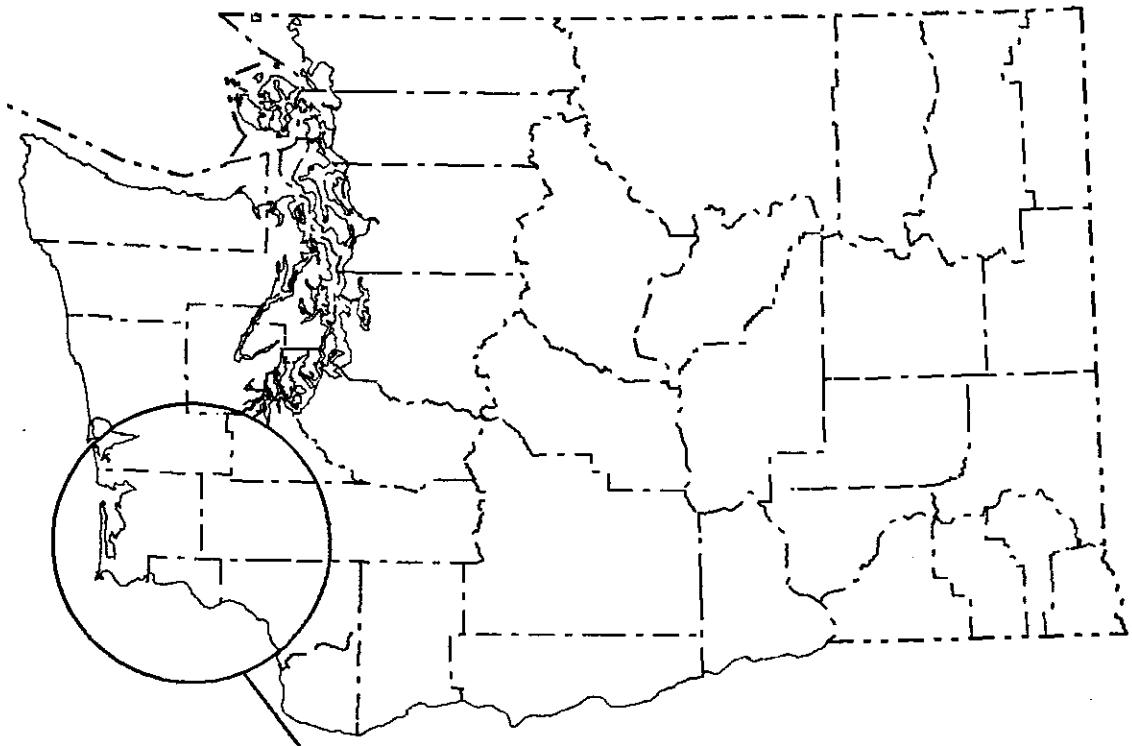

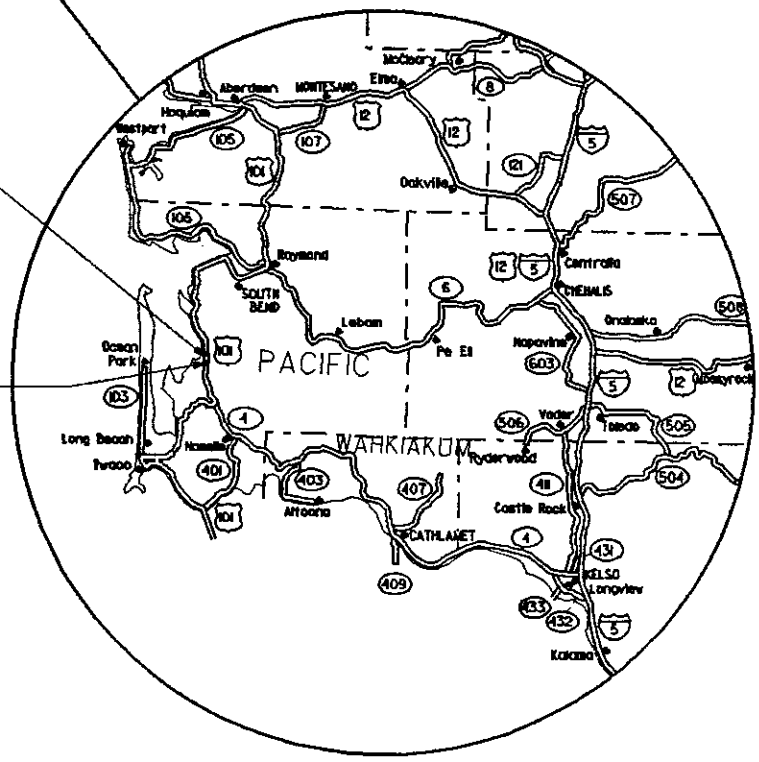

Jorgenson Slough

Middle Nemah River

Bridge Name	Coulter Creek
Bridge No.	302/3 M.P. 1.99
Life Expectancy	1997
ADT	1950
Accident Experience	None
Width	Twenty-eight feet
Appr. Rdwy. Width	Twenty-four feet w/two-foot shoulders
Bridge Length/Type	One hundred sixteen feet/creosote Treated timber trestle
Average Operating Speed	45 MPH
Vehicle Mix	6% Trucks
Completion Date of SL-1 Installation	Oct. 1, 1986

Plans were prepared by the Washington State Department of Transportation.

The design of the bridge rails followed the criteria in NCHRP Report 239, "Multiple-Service-Level Highway Bridge Railing Selection Procedures." The 239 report addressed the use of the SL-1 system on concrete bridges, so in order to use the system on wooden bridges, brackets were designed that could be bolted to the wooden deck. The rest of the system could then be connected to the bracket.

The mounting brackets for the rail posts were designed for use with the different timber bridge decks. All of our wooden deck bridges have an asphalt overlay on them. It was determined these brackets could be modified to accommodate an asphalt overlay depth of up to 9 inches. Asphalt depth greater than 9 inches will create a design that will cause construction problems in trying to install the system under traffic. Each bridge needs to be reviewed to see what modification needs to be made to the bracket to accommodate that bridge.

In all cases, the brackets need to be designed so that the posts are the same length and the top of the rail is 32 inches from roadway surface. The installed system will then be compatible with the system that was crash tested.

Most of our timber bridges have timber rub rails or curbs. This rail has to be removed to install the SL-1 system, thus requiring asphalt to fill in the void. To provide a nice finished surface at the edge of the bridge, a treated timber was bolted to the deck to provide a barrier to place the asphalt against.

CONSTRUCTION SUMMARY

This project consisted of replacing wood railing with SL-1 bridge rail on three bridges to upgrade the bridge rails for the three bridges.

The Middle Nemah River and Jorgenson Slough bridges were retrofitted by the bridge crews of District 4 based in Vancouver, Washington. The Coulter Creek bridge rail was rebuilt by the District 3 bridge crew based in Tumwater, Washington.

Typical crews included one Bridge Lead Tech, three Bridge Tech 2's, one Bridge Tech 3, and one Bridge Tech 1. Typical equipment for this project included one bridge tool truck, two bridge trucks, one carry-all, one three-quarter ton pickup, and one six-passenger pickup.

The actual total cost for these three bridges, including approach rail, is $96,872.52. The cost breakdown is as follows:

Summary of Cost

Middle Nemah River Bridge

Bridge Rail Cost:

Labor	$ 5,892.18
Equipment	3,180.15
Per Diem	1,585.65
Materials	4,412.90
	$15,070.88

Approach Rail Cost:

Labor	$ 5,633.00
Equipment	3,055.43
Per Diem	1,066.68
Materials	3,963.44
	$13,718.55
Subtotal	$28,789.43

VICINITY MAP
Coulter Creek Bridge

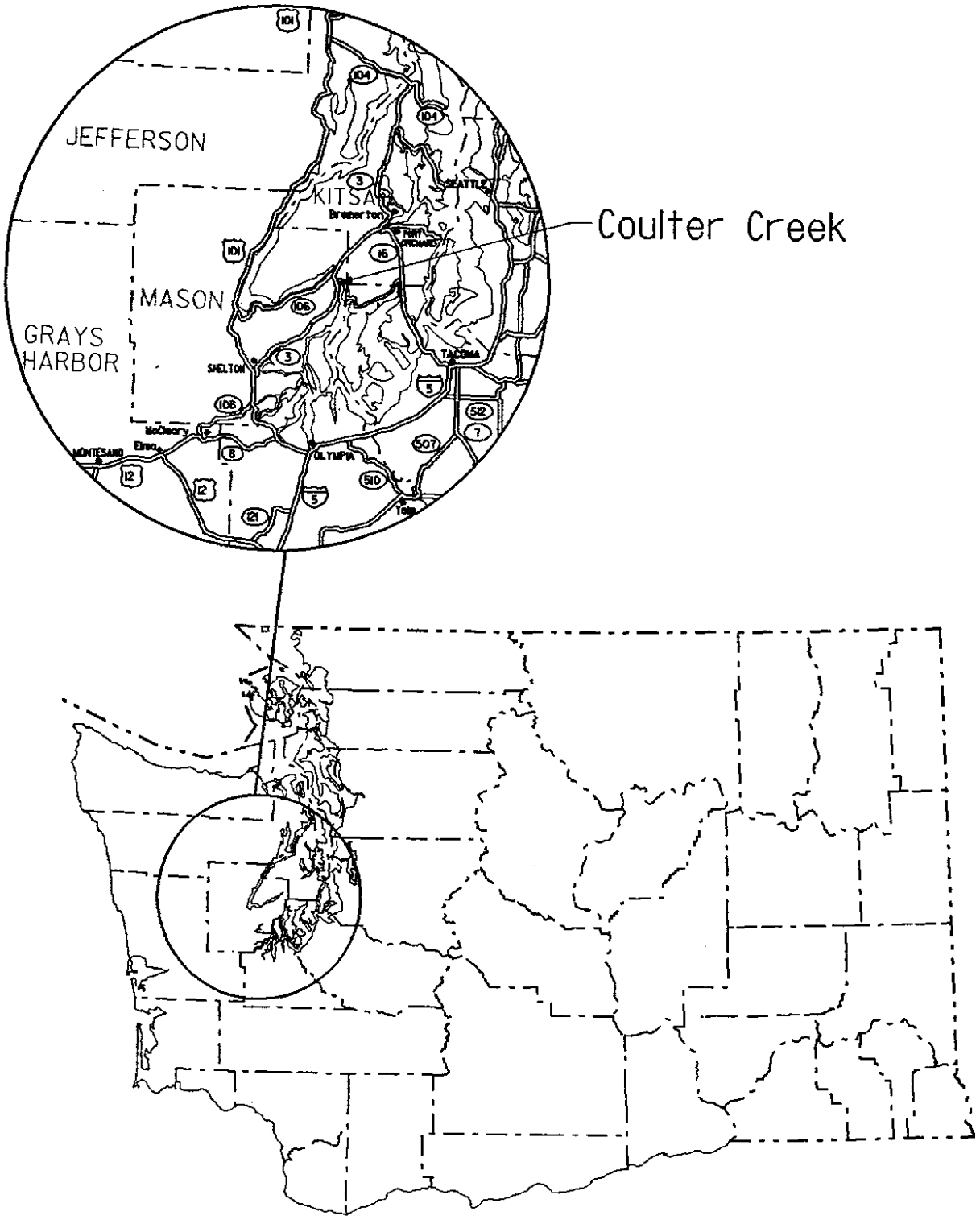

Equipment costs for the Coulter Creek rail replacement were higher because of unexpected soil conditions in the approaches. Large rocks were used in the fill at time of bridge construction and power auger was required for boring the holes for guardrail posts.

Included below are some of the problems which were encountered during construction of the Service Level 1 bridge rails.

Most of the bolt holes didn't have enough clearance for bolts to fit through after they were galvanized. The holes needed to be reamed in the field. All bolt threads needed to be chased prior to installation because of the galvanizing.

The deck for Middle Nemah Bridge was figured to be 3-1/2 to 4 inches thick, but was actually 6 inches. One-inch by 8-inch bolts were used to go through the mounting bracket, deck, and backing plate, as the 6-inch bolts which were ordered were not long enough.

Three-quarter inch by 10-inch lag screws on 3-foot centers were called out to secure the pressure treated timber two-by-two's and four-by-four paving rails to the deck. Galvanized spikes at 4-foot centers were used in place of the 10-inch lag screws.

All bridge work for Coulter Creek went smoothly. Except for the soil problem described above, all work went smoothly on the approaches.

Jorgenson Slough Bridge

Bridge Rail Cost:

Labor	$ 5,539.22
Equipment	2,944.68
Per Diem	1,743.99
Materials	5,686.45
	$15,914.34

Approach Rail Cost:

Labor	$ 6,276.62
Equipment	3,320.59
Per Diem	1,406.49
Materials	4,194.16
	$15,197.86
Subtotal	$31,112.20

Coulter Creek Bridge

Bridge Rail Cost:

Labor	$ 3,889.30
Equipment	8,894.79
Per Diem	40.00
Materials	6,732.51
	$19,556.60

Approach Rail Cost:

Labor	$ 5,750.76
Equipment	6,557.40
Materials	5,106.13
	$17,414.29
Subtotal	$36,970.89
TOTAL	$96,872.52

The cost of bridge rail was $87.62 per foot for the Middle Nemah River Bridge, $113.67 per foot for the Jorgenson Slough Bridge, and $84.30 for the Coulter Creek Bridge. These costs can be compared with work done by a contractor to remove a wood rail and install an SL-1 system. The cost to do this work was $91.34 per foot.

No cost comparison for installing the approach rails could be made. The approach rail installed under the contract was not compatible with an SL-1 system, and had to be redone by change order.

APPENDIX A

DESIGN SHEETS

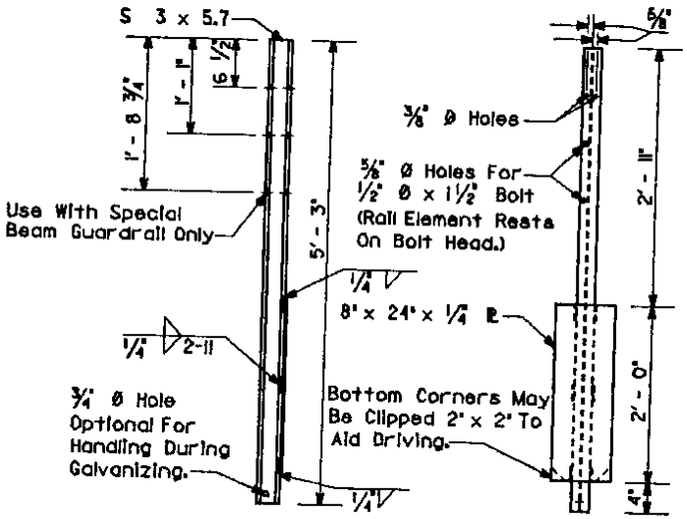

G-2 Guardrail Post

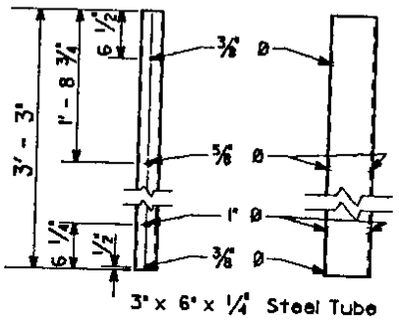

Rail Post Tube

COULTER CREEK BRIDGE
STEEL POST DETAILS

APPENDIX B

PHOTOGRAPHS

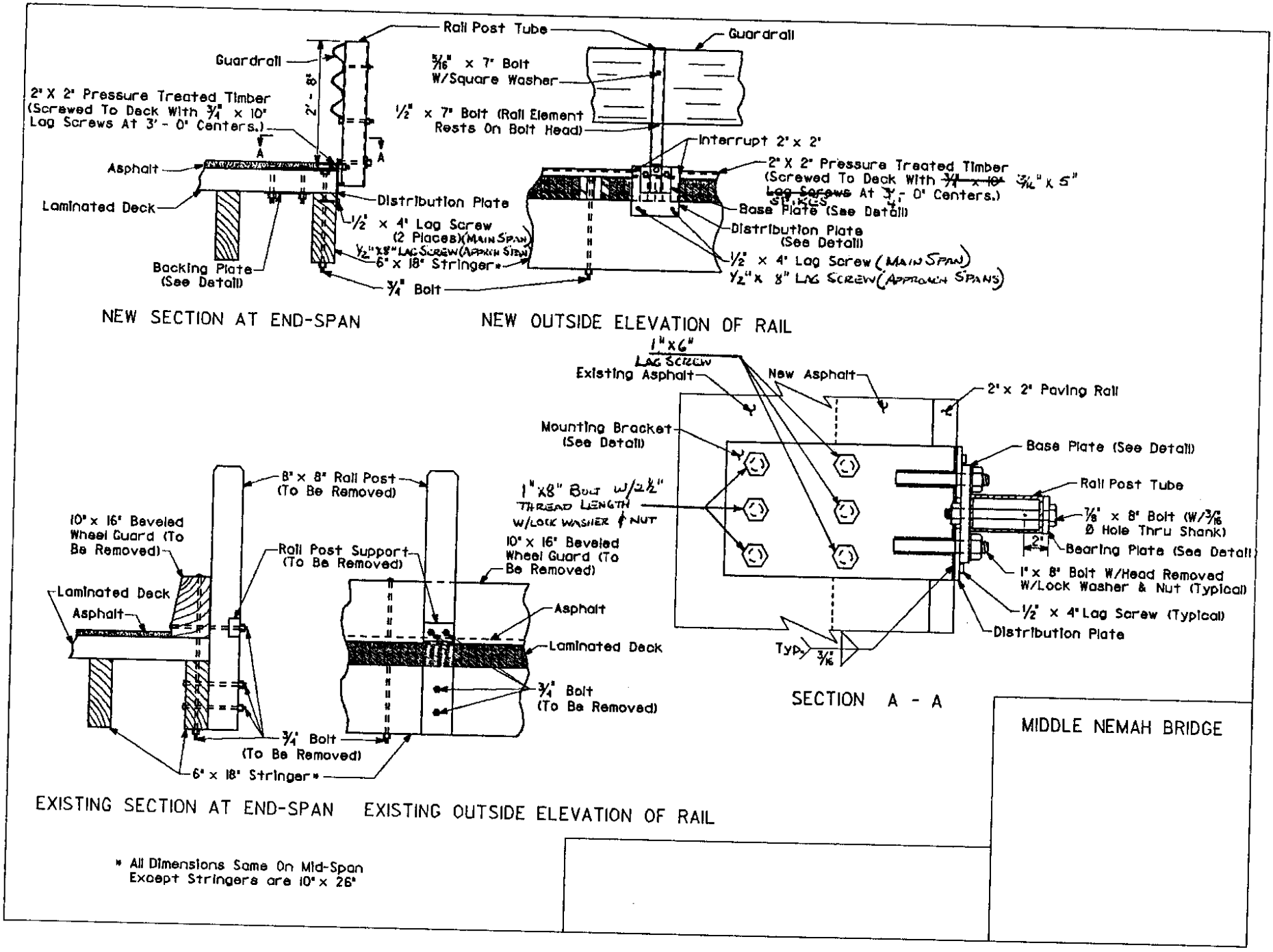
Rail Post Tube
Guardrail
Guardrail
5/16" x 7" Bolt W/Square Washer
2" X 2" Pressure Treated Timber (Screwed To Deck With 3/4" x 10" Lag Screws At 3' - 0" Centers.)
2' - 8"
1/2" x 7" Bolt (Rail Element Rests On Bolt Head)
Interrupt 2" x 2"
A
A
Asphalt
2" X 2" Pressure Treated Timber (Screwed To Deck With ~~3/4" x 10"~~ 3/16" X 5" ~~Lag Screws~~ SPIKES At 3' - 0" Centers.)
Laminated Deck
Distribution Plate
Base Plate (See Detail)
1/2" x 4" Lag Screw (2 Places)(MAIN SPAN)
1/2"x8" LAG SCREW (APPROX SPAN)
Distribution Plate (See Detail)
6" x 18" Stringer*
1/2" x 4" Lag Screw (MAIN SPAN)
1/2" x 8" LAG SCREW (APPROX SPANS)
Backing Plate (See Detail)
3/4" Bolt
NEW SECTION AT END-SPAN
NEW OUTSIDE ELEVATION OF RAIL
1"x6" LAG SCREW
Existing Asphalt
New Asphalt
2" x 2" Paving Rail
Mounting Bracket (See Detail)
Base Plate (See Detail)
8" x 8" Rail Post (To Be Removed)
1"x8" BOLT W/2 1/2" THREAD LENGTH W/LOCK WASHER & NUT
Rail Post Tube
7/8" x 8" Bolt (W/3/16 Ø Hole Thru Shank)
10" x 16" Beveled Wheel Guard (To Be Removed)
Rail Post Support (To Be Removed)
10" x 16" Beveled Wheel Guard (To Be Removed)
2"
Bearing Plate (See Detail)
1" x 8" Bolt W/Head Removed W/Lock Washer & Nut (Typical)
Laminated Deck
Asphalt
Asphalt
1/2" x 4" Lag Screw (Typical)
Distribution Plate
Laminated Deck
Typ. 3/16
3/4" Bolt (To Be Removed)
SECTION A - A
3/4" Bolt (To Be Removed)
6" x 18" Stringer*
EXISTING SECTION AT END-SPAN
EXISTING OUTSIDE ELEVATION OF RAIL
* All Dimensions Same On Mid-Span Except Stringers are 10" x 26"
MIDDLE NEMAH BRIDGE

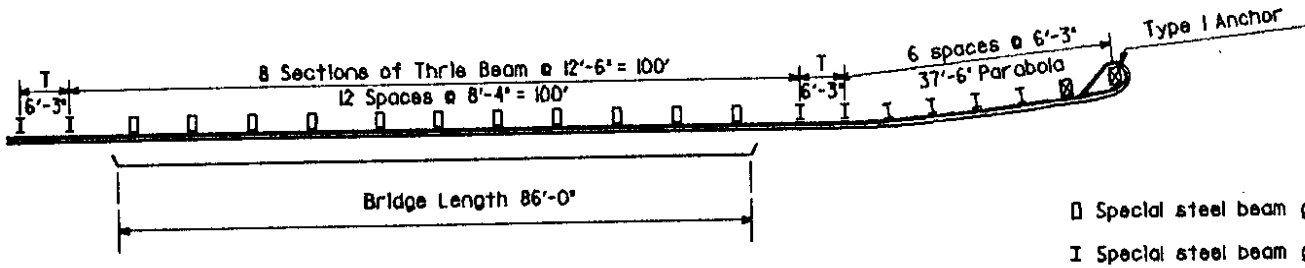

MIDDLE NEMAH RIVER BRIDGE 101/31

[] Special steel beam guardrail post for attachment to structure.

I Special steel beam guardrail post S3x5.7.

For Type I anchor and wood post details see Standard Plan sheet C-6.

For Thrie Beam Guardrail details see Standard Plan sheet C-1a.

T (Transition section) and BCT (3 - 12'-6" sections of W Beam at 6'-3" spacing) are typical for all Bridge ends.

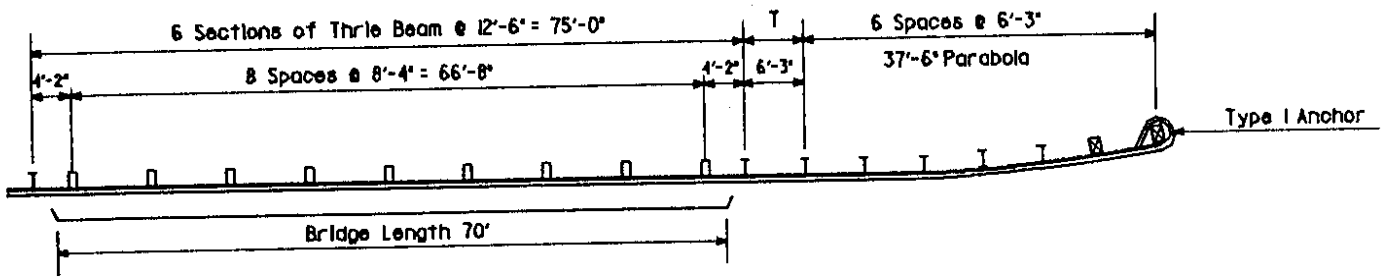

JORGENSON SLOUGH BRIDGE 101/33

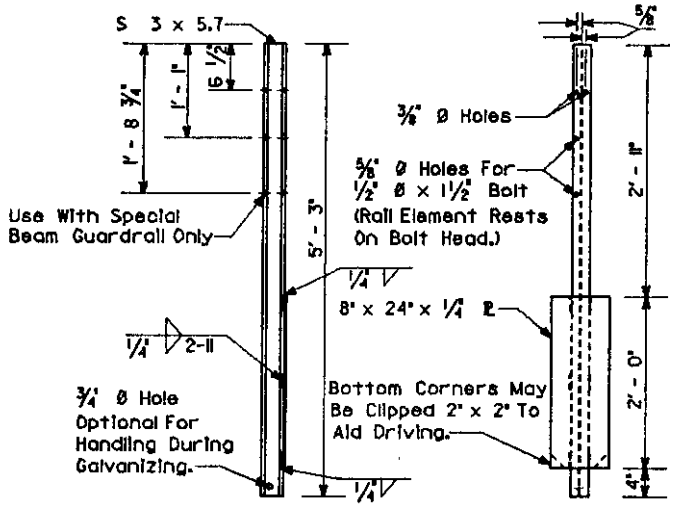

G-2 Guardrail Post

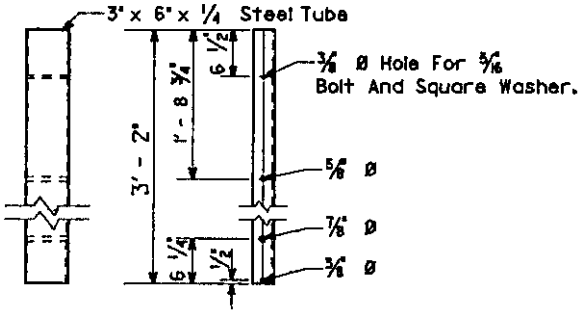

Rail Post Tube

MIDDLE NEMAH BRIDGE
STEEL POST DETAILS

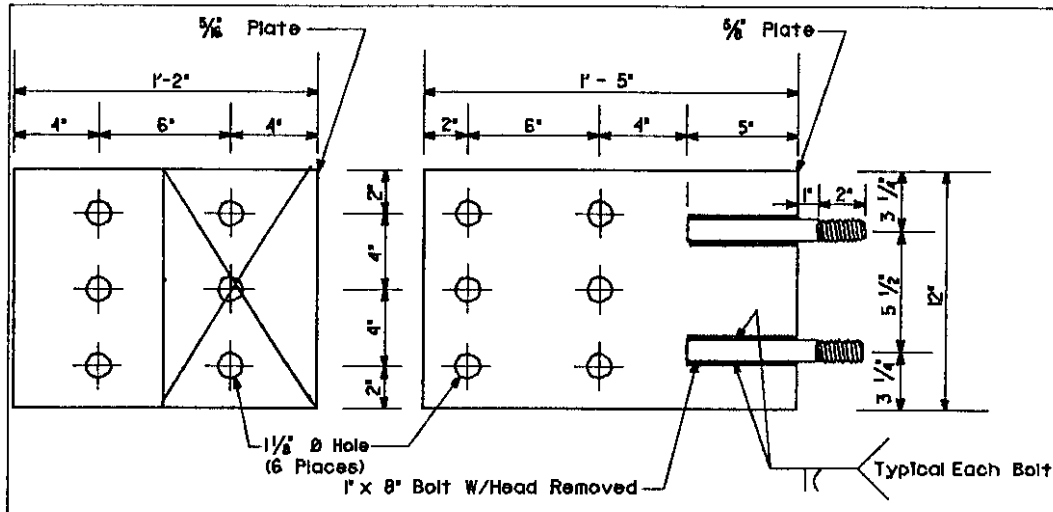

BACKING PLATE DETAIL

MOUNTING BRACKET DETAIL

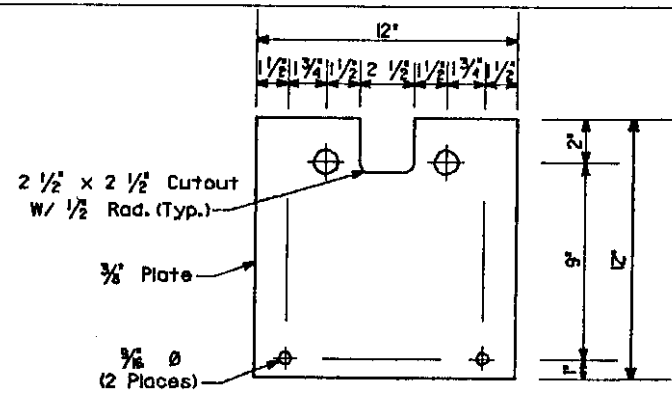

DISTRIBUTION PLATE DETAIL

Notes:

If unsound wood is encountered in mounting, it should be replaced.

To insure proper bearing for the mounting bracket the deck surface and side timbers must be sanded smooth & even under the plates and throughly dried.

Do not install under wet conditions.

Deck surface shall be square with side surface.

Galvanize all pieces, repair welded parts with galvanizing paint.

All plate material ASTM A36.

Horizontal threaded rods ASTM A325.

Vertical bolts thru deck ASTM A307.

Rail post tubes ASTM A501.

Bolt hole diameter thru deck 1 1/16".

All Bolts to be UNC.

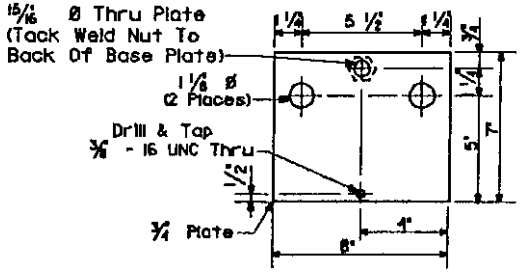

BASE PLATE DETAIL

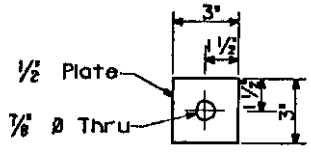

BEARING PLATE DETAIL

MIDDLE NEMAH BRIDGE

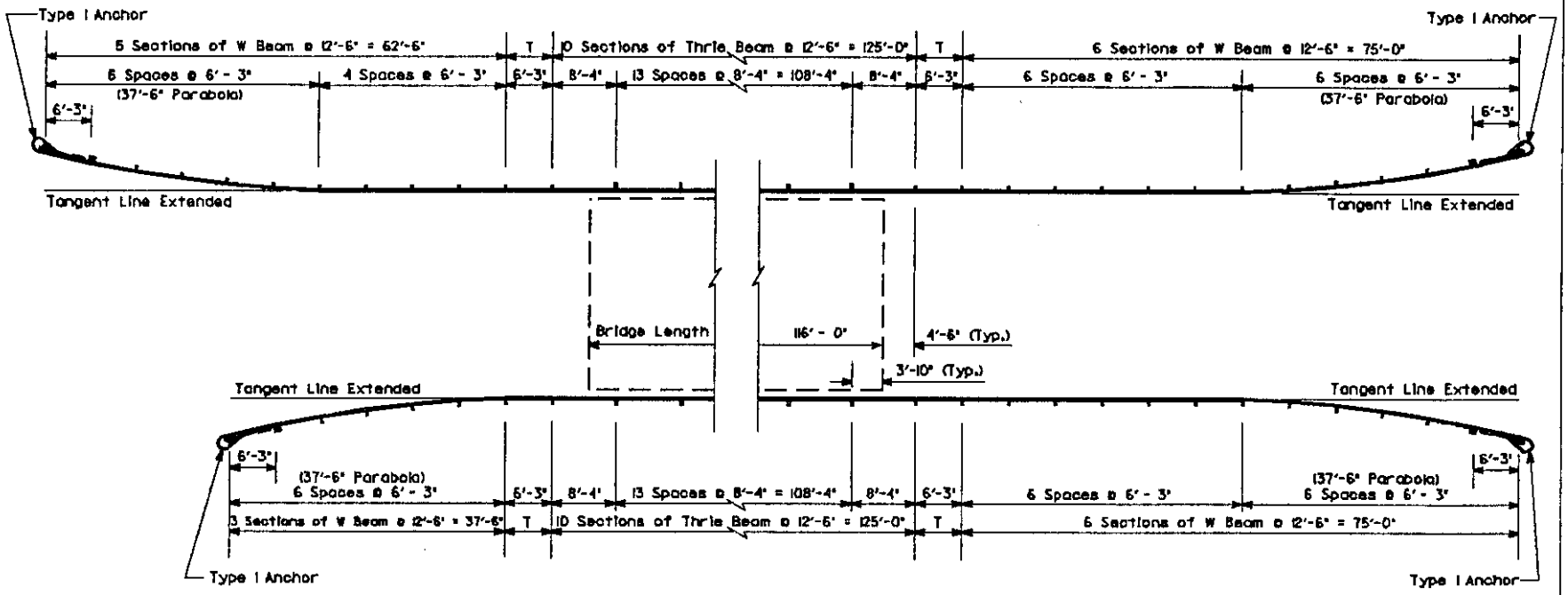

COULTER CREEK BRIDGE

NOTES:

- Special steel beam guardrail post for attachment to structure.
- Special steel beam guardrail post S3 x 5.7.
- 6" x 8" wood posts.

T Transition Section.

For Type I Anchor and wood post details see Std. Plan C-6.

For Thrie Beam Guardrail details see Std. Plan Sheet C-1a.

COULTER CREEK BRIDGE

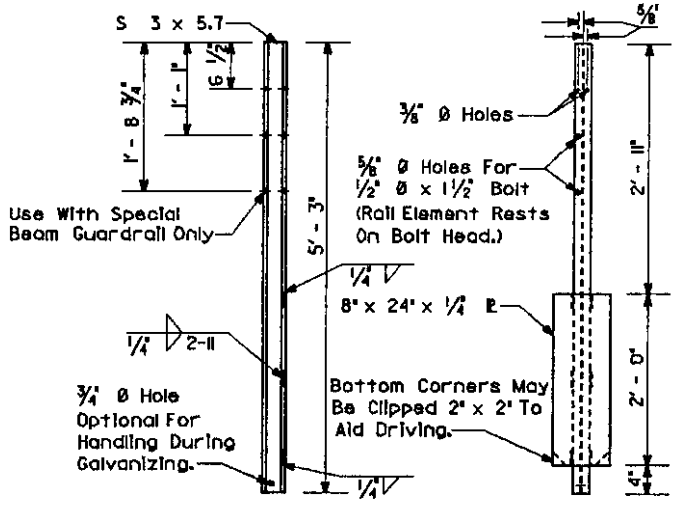

G-2 Guardrail Post

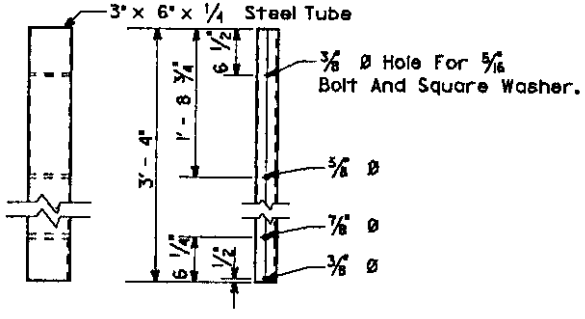

Rail Post Tube

JORGENSON SLOUGH BRIDGE
STEEL POST DETAILS

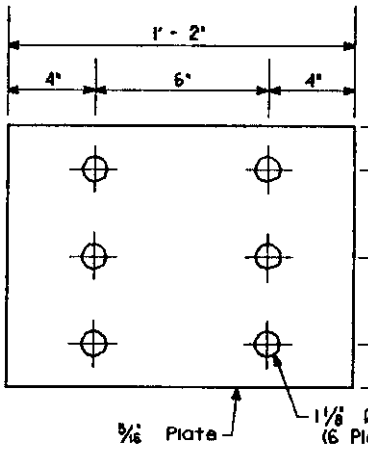

BACKING PLATE DETAIL

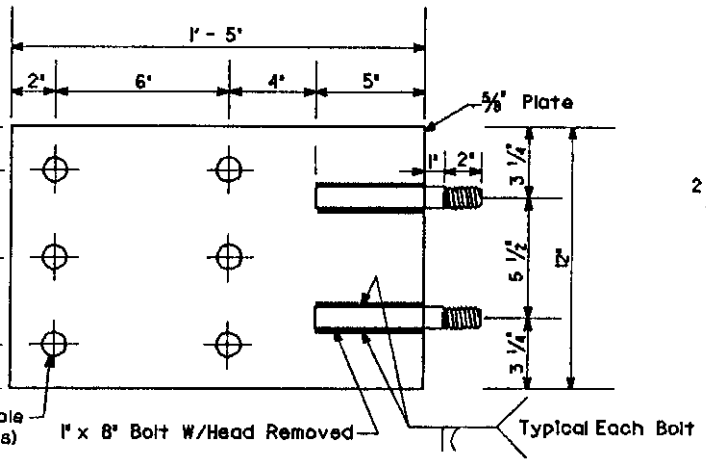

MOUNTING BRACKET DETAIL

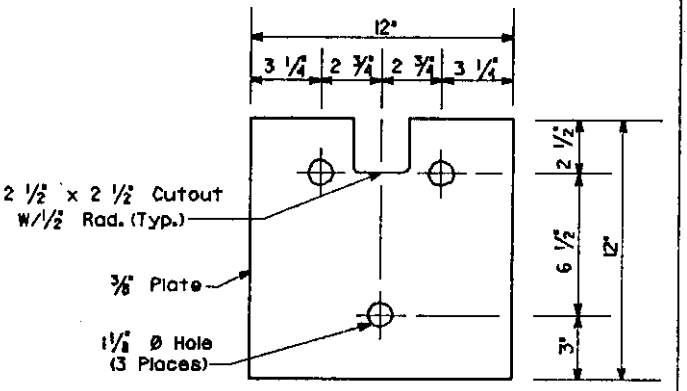

DISTRIBUTION PLATE DETAIL

Notes:

If unsound wood is encountered in mounting, it should be replaced.

To insure proper bearing for the mounting bracket the deck surface and side timbers must be sanded smooth & even under the plates and throughly dried.

Do not install under wet conditions.

Deck surface shall be square with side surface.

Galvanize all pieces, repair welded parts with galvanizing paint.

All plate material ASTM A36.

Horizontal threaded rods ASTM A325.

Vertical bolts thru deck ASTM A307.

Rail post tubes ASTM A501.

Bolt hole diameter thru deck 1 1/16".

All Bolts to be UNC.

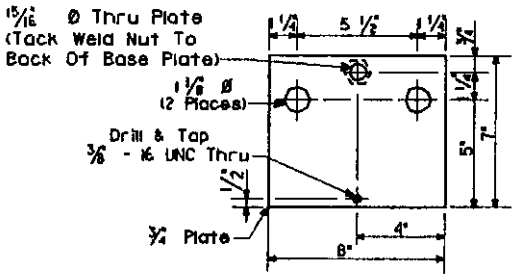

BASE PLATE DETAIL

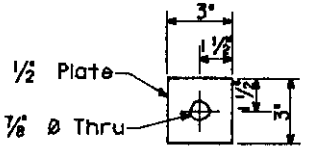

BEARING PLATE DETAIL

JORGENSON SLOUGH BRIDGE

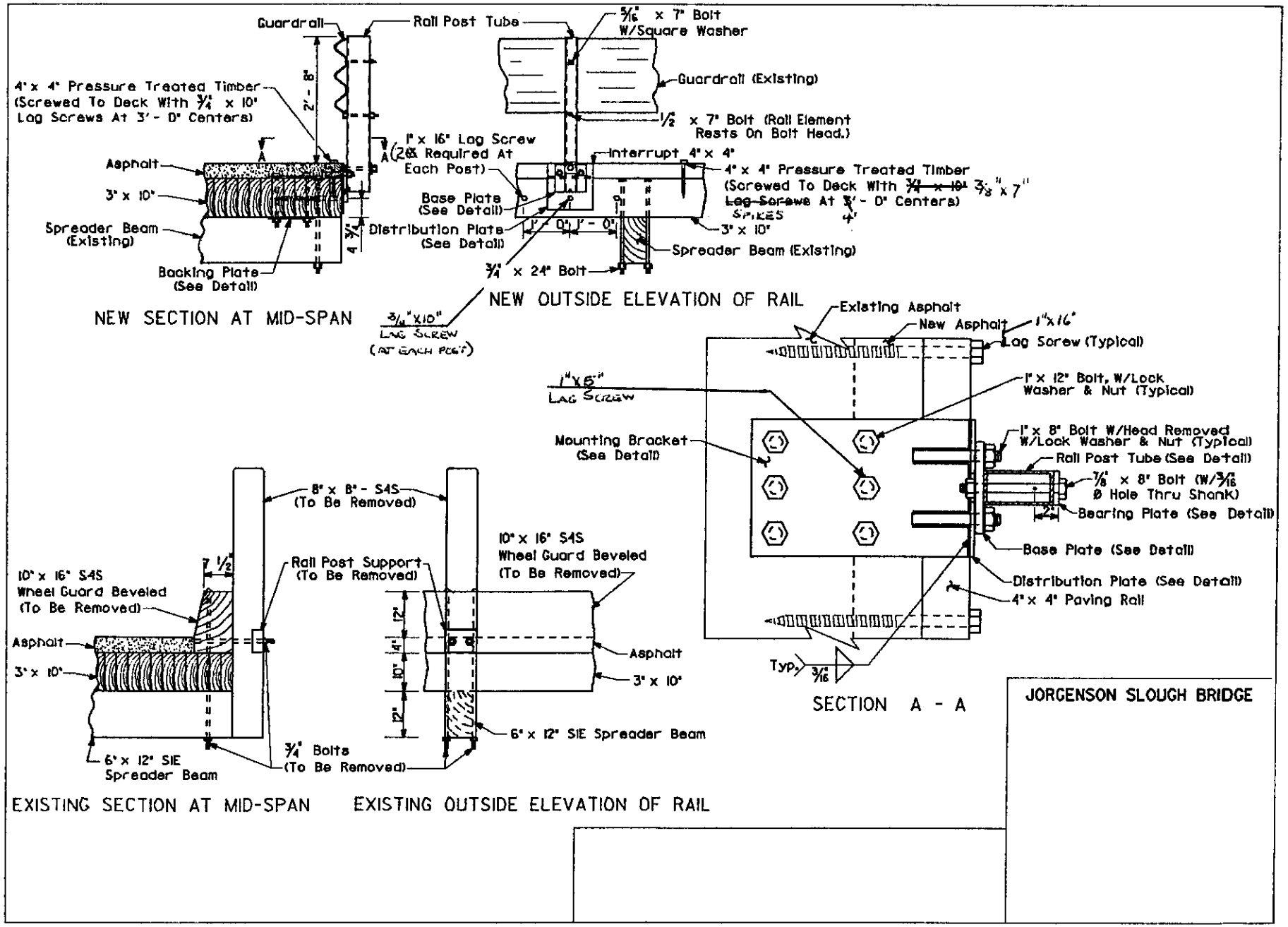
Guardrail
Rail Post Tube
5/16" x 7" Bolt W/Square Washer
Guardrail (Existing)
4" x 4" Pressure Treated Timber (Screwed To Deck With 3/4" x 10" Lag Screws At 3' - 0" Centers)
2' - 8"
1/2" x 7" Bolt (Rail Element Rests On Bolt Head.)
1" x 16" Lag Screw (2 Required At Each Post)
Interrupt 4" x 4"
4" x 4" Pressure Treated Timber (Screwed To Deck With ~~3/4" x 10"~~ 3/8" x 7" ~~Lag Screws~~ SPIKES At ~~3'~~ 4' - 0" Centers)
Asphalt
3" x 10"
Base Plate (See Detail)
Spreader Beam (Existing)
Distribution Plate (See Detail)
1' - 0"
1' - 0"
3" x 10"
Spreader Beam (Existing)
Backing Plate (See Detail)
3/4" x 24" Bolt
NEW SECTION AT MID-SPAN
3/4" x 10" LAG SCREW (AT EACH POST)
NEW OUTSIDE ELEVATION OF RAIL
Existing Asphalt
New Asphalt
1" x 16" Lag Screw (Typical)
1" x 6" LAG SCREW
1" x 12" Bolt, W/Lock Washer & Nut (Typical)
Mounting Bracket (See Detail)
1" x 8" Bolt W/Head Removed W/Lock Washer & Nut (Typical)
Rail Post Tube (See Detail)
7/8" x 8" Bolt (W/3/16" Ø Hole Thru Shank)
Bearing Plate (See Detail)
Base Plate (See Detail)
Distribution Plate (See Detail)
4" x 4" Paving Rail
Typ. 3/16"
SECTION A - A
8" x 8" - S4S (To Be Removed)
10" x 16" S4S Wheel Guard Beveled (To Be Removed)
7 1/2"
Rail Post Support (To Be Removed)
10" x 16" S4S Wheel Guard Beveled (To Be Removed)
12"
4"
10"
12"
Asphalt
3" x 10"
Asphalt
3" x 10"
6" x 12" SIE Spreader Beam
3/4" Bolts (To Be Removed)
6" x 12" SIE Spreader Beam
EXISTING SECTION AT MID-SPAN
EXISTING OUTSIDE ELEVATION OF RAIL
JORGENSON SLOUGH BRIDGE

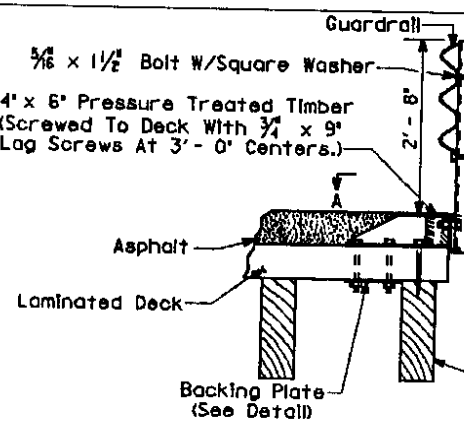

NEW SECTION AT END-SPAN

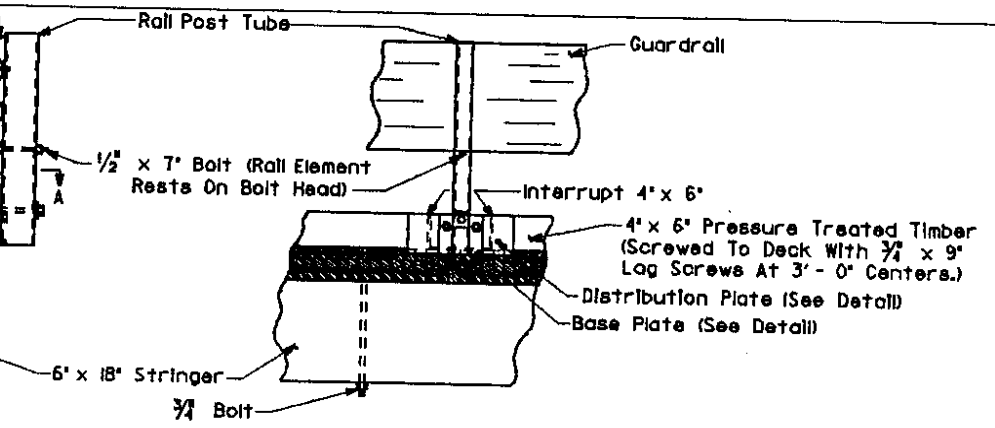

NEW OUTSIDE ELEVATION OF RAIL

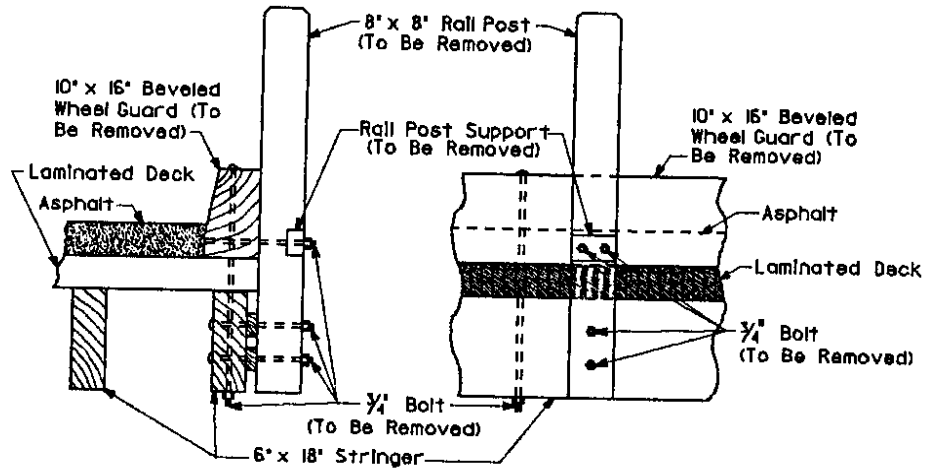

EXISTING SECTION AT END-SPAN EXISTING OUTSIDE ELEVATION OF RAIL

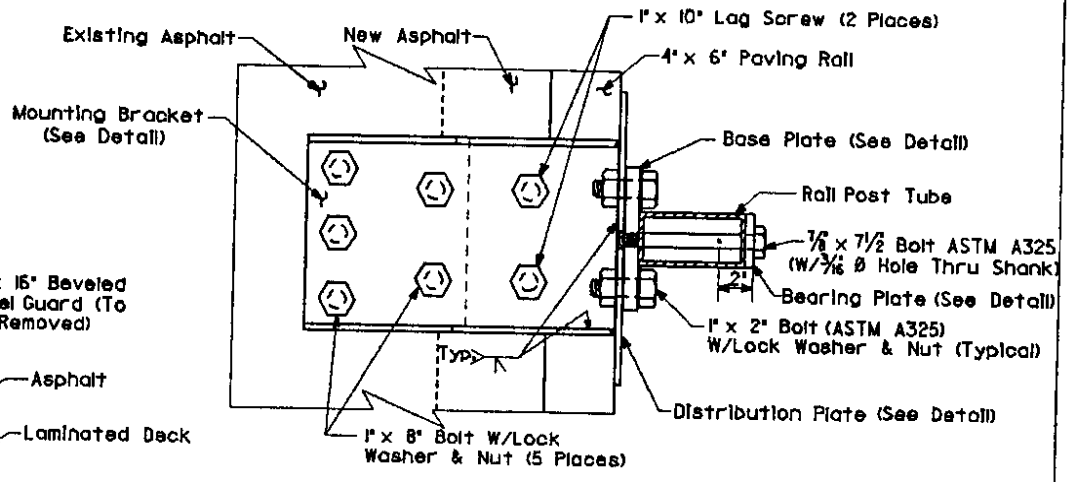

SECTION A - A

COULTER CREEK BRIDGE

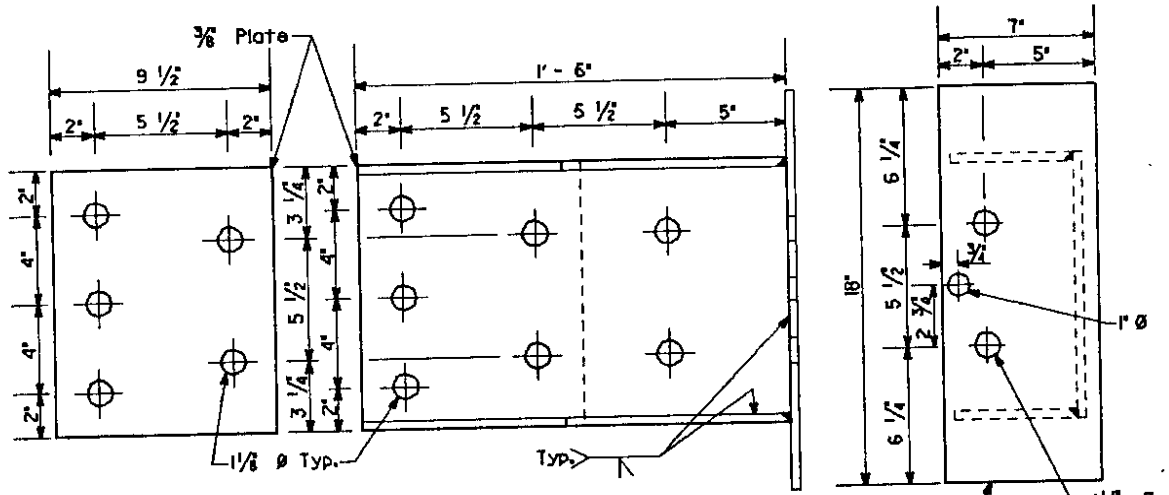

BACKING PLATE DETAIL

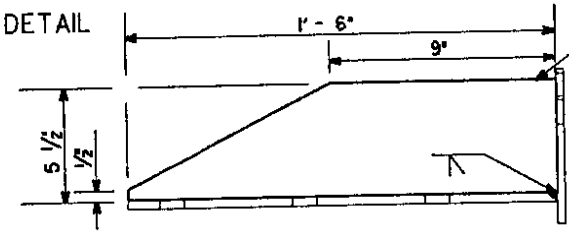

MOUNTING BRACKET DETAIL

Notes:

If unsound wood is encountered in mounting, it should be replaced.

To insure proper bearing for the mounting bracket the deck surface and side timbers must be sanded smooth & even under the plates and throughly dried.

Do not install under wet conditions.

Deck surface shall be square with side surface.

Galvanize all pieces, repair welded parts with galvanizing paint.

All plate material ASTM A36.

Unless otherwise noted bolts shall conform to requirements of ASTM A307 and nuts to requirement of ASTM A563, Grade A or better.

Bolt hole diameter thru deck 1 1/16.

Rail post tubes ASTM A501.

All Bolts to be UNC.

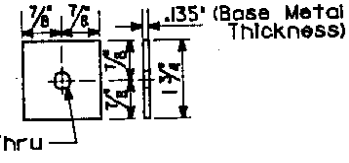

SQUARE WASHER DETAIL

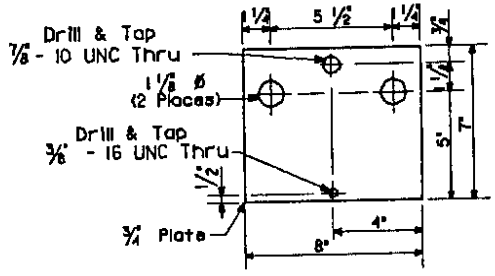

BASE PLATE DETAIL

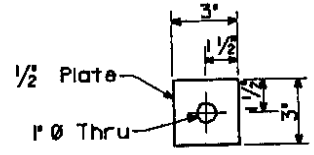

BEARING PLATE DETAIL

COULTER CREEK BRIDGE

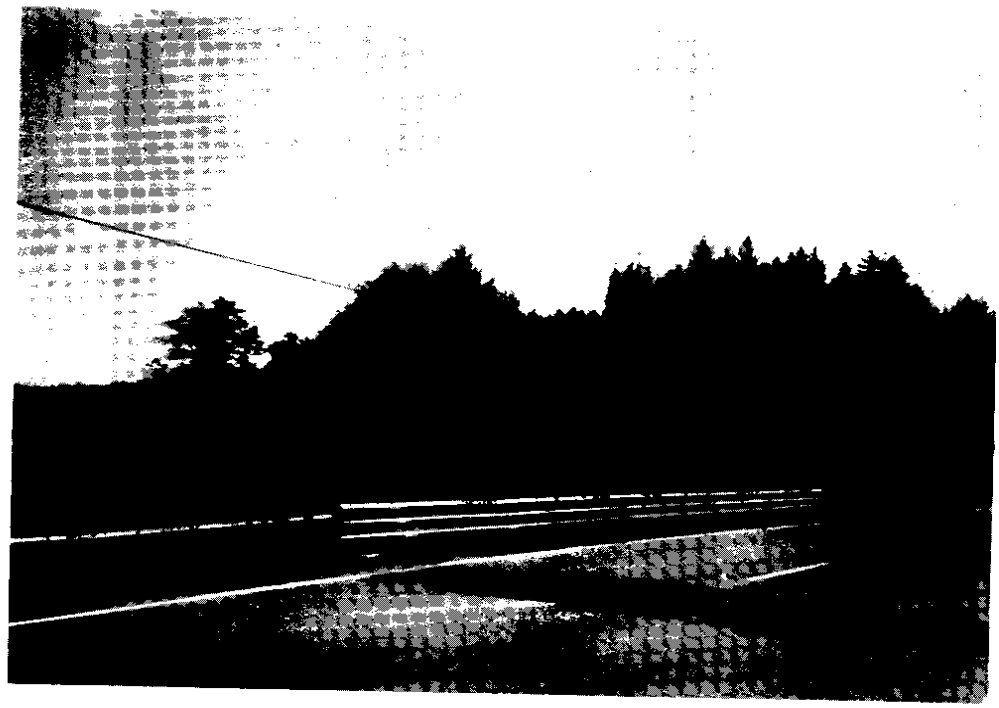

JORGENSON SLOUGH: SERVICE LEVEL 1 BRIDGE RAIL NEAR COMPLETION WEST SIDE OF BRIDGE.

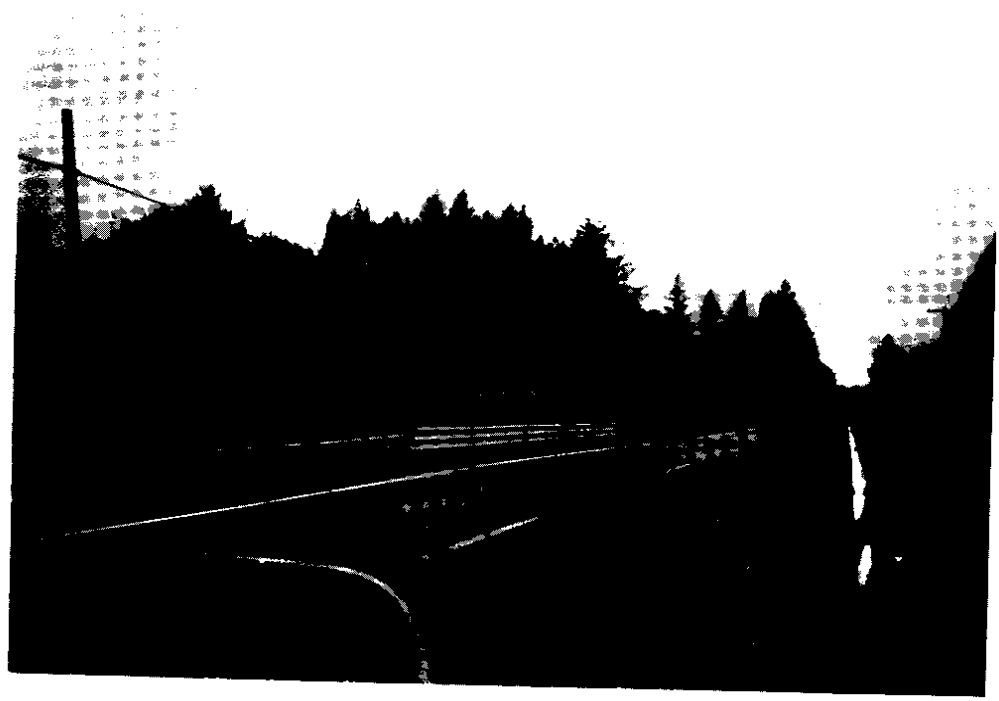

JOREGENSON SLOUGH: SERVICE LEVEL 1 BRIDGE RAIL COMPLETE.

DEMONSTRATION PROJECT 64
SERVICE LEVEL 1 BRIDGE RAIL

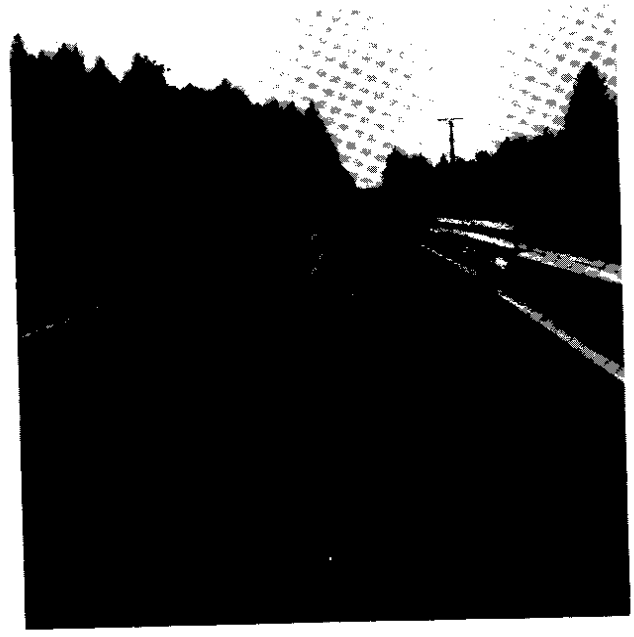

JORGENSON SLOUGH: BEFORE INSTALLATION OF THE BRIDGE RAIL.

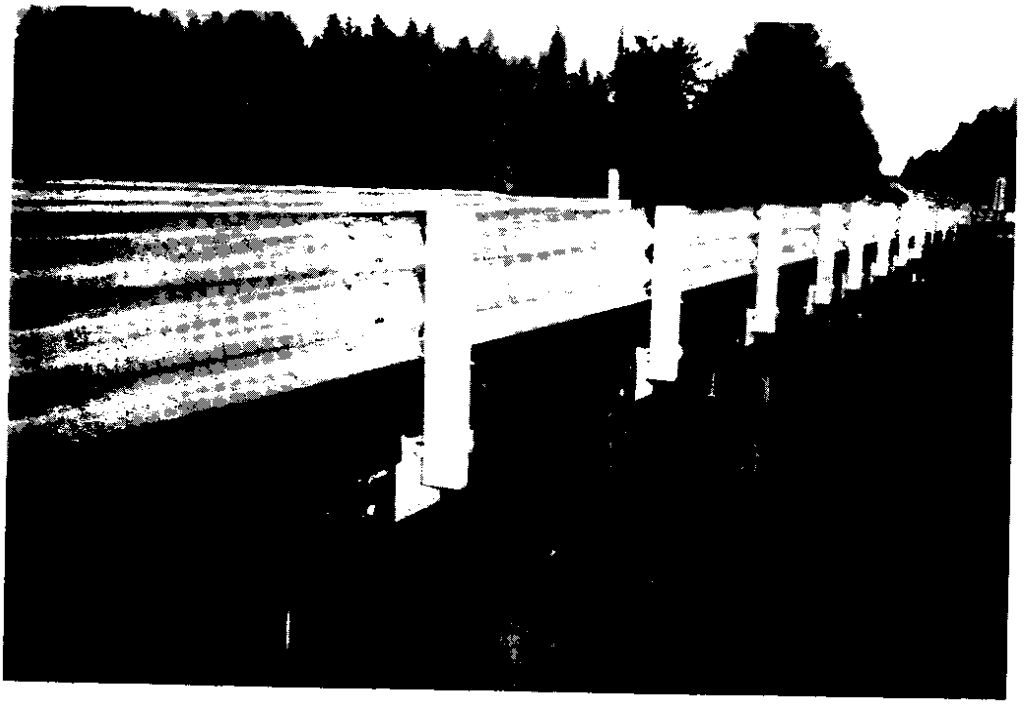

JORGENSON SLOUGH: RAIL POST TUBE INSTALLATION ON EAST SIDE OF BRIDGE.

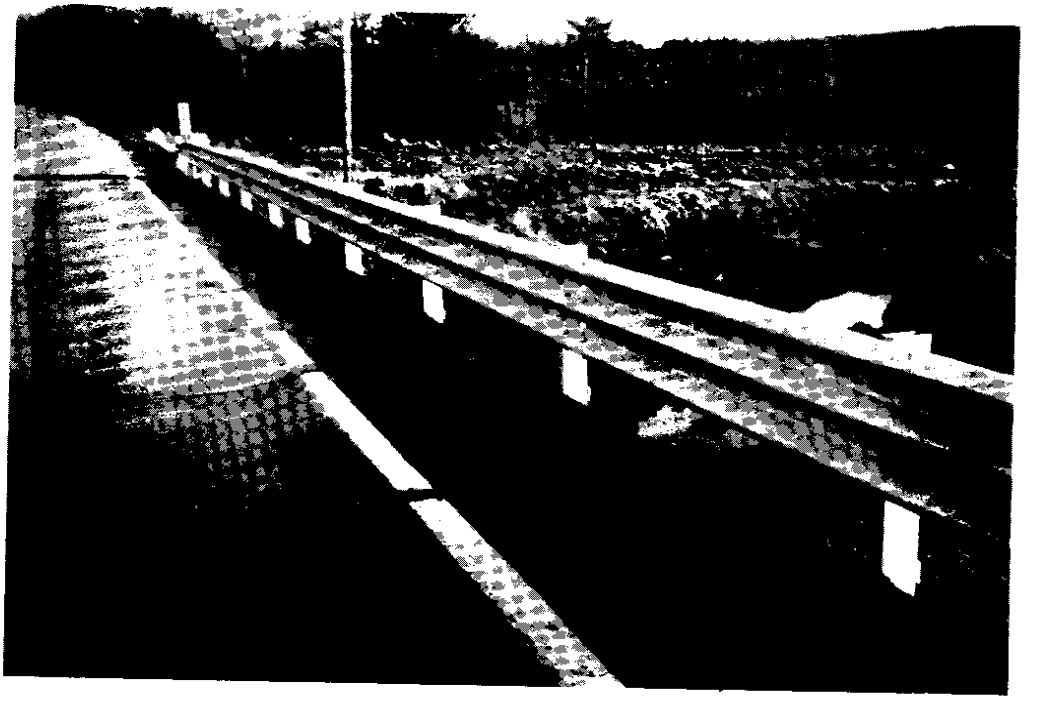

JOREGENSON SLOUGH: COMPLETED INSTALLATION OF SERVICE LEVEL 1 BRIDGE RAIL

DEMONSTRATION PROJECT 64
SERVICE LEVEL 1 BRIDGE RAIL

JORGENSON SLOUGH: RAIL POST TUBE INSTALLATION.

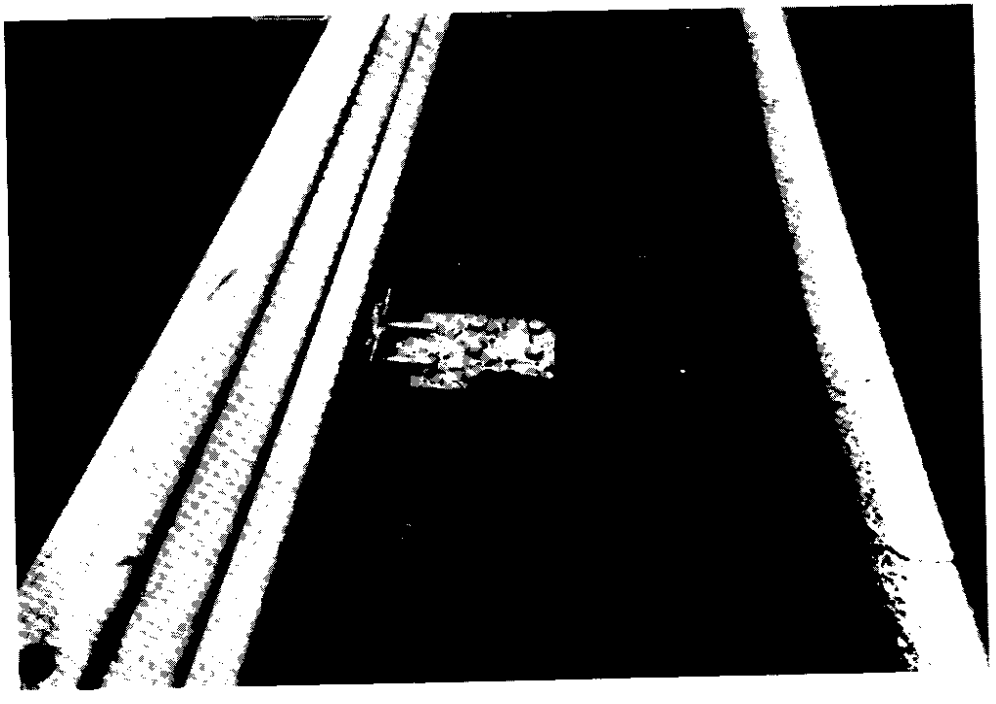

JOREGENSON SLOUGH: MOUNTING BRACKET INSTALATION BEFORE ASPHALT IS PLACES.

MIDDLE NEMAH RIVER: SERVICE LEVEL 1 BRIDGE RAIL NEAR COMPLETION WEST SIDE OF BRIDGE.

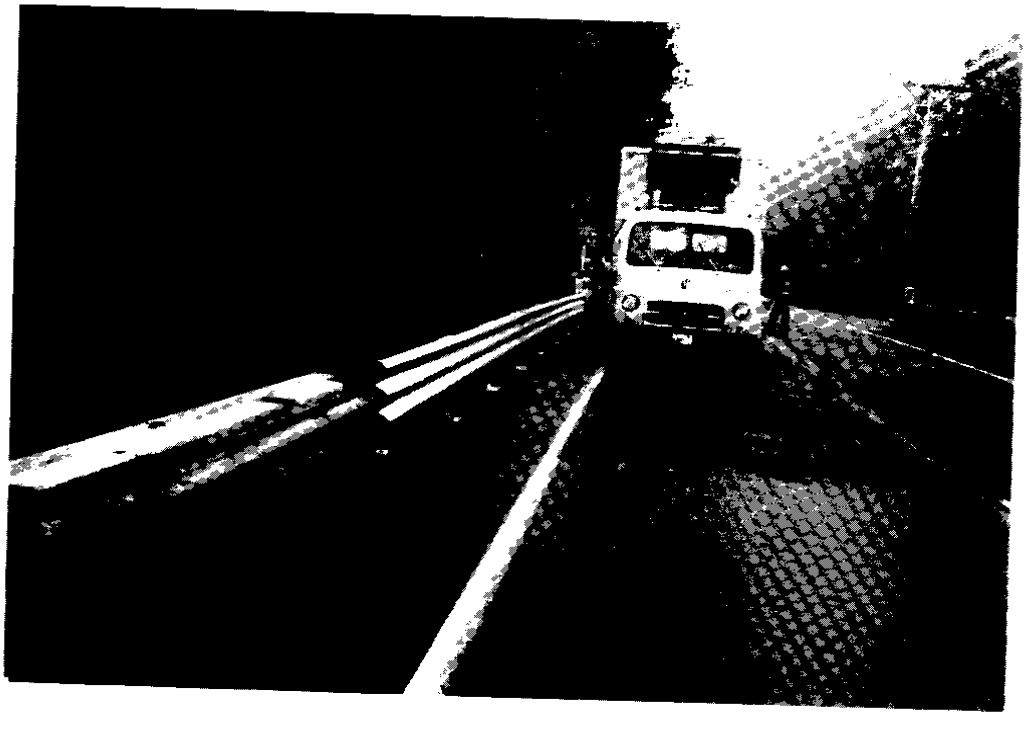

MIDDLE NEMAH RIVER: SPECIAL MAINTENANCE BRIDGE CREW INSTALLING BRIDGE RAIL.

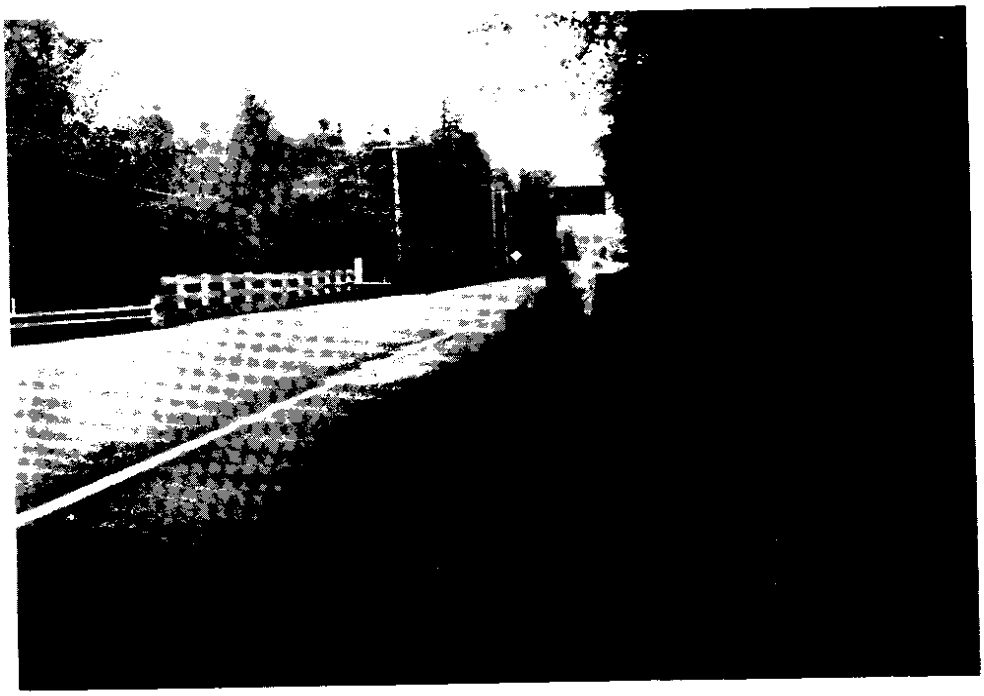

MIDDLE NEMAH RIVER: BEFORE INSTALLATION OF BRIDGE RAIL.

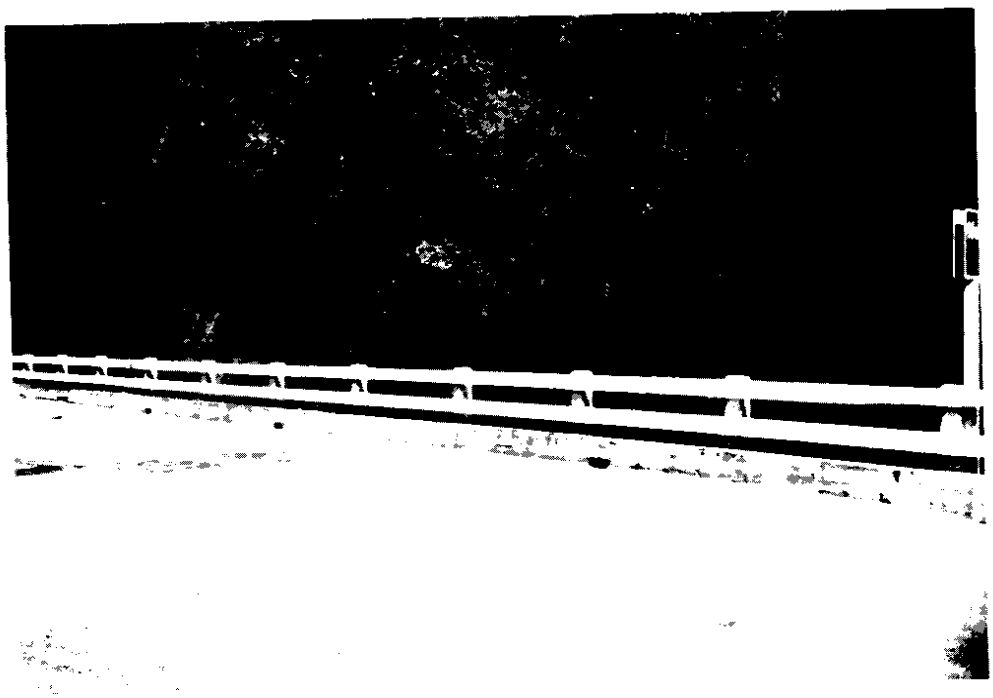

MIDDLE NEMAH RIVER: BEFORE INSTALLATION OF BRIDGE RAIL.

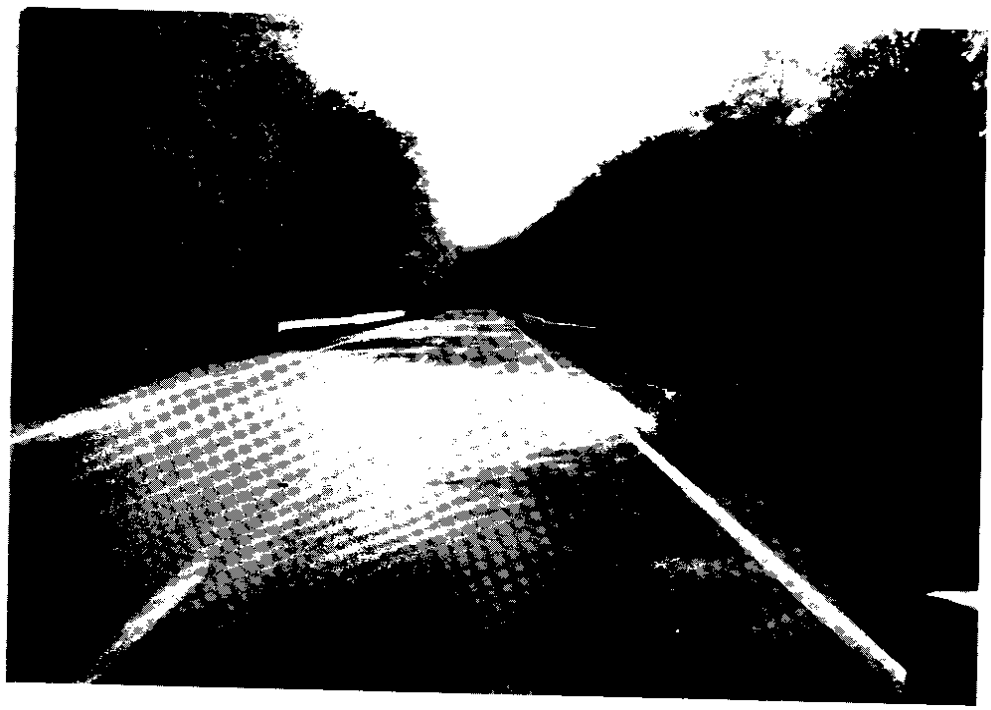

MIDDLE NEMAH RIVER: COMPLETED SERVICE LEVEL 1 BRIDGE RAIL WITH COMPLETED APPROACH GUARD RAIL.

MIDDLE NEMAH RIVER: COMPLETED SERVICE LEVEL 1 BRIDGE RAIL WITH COMPLETED APPROACH GUARD RAIL.

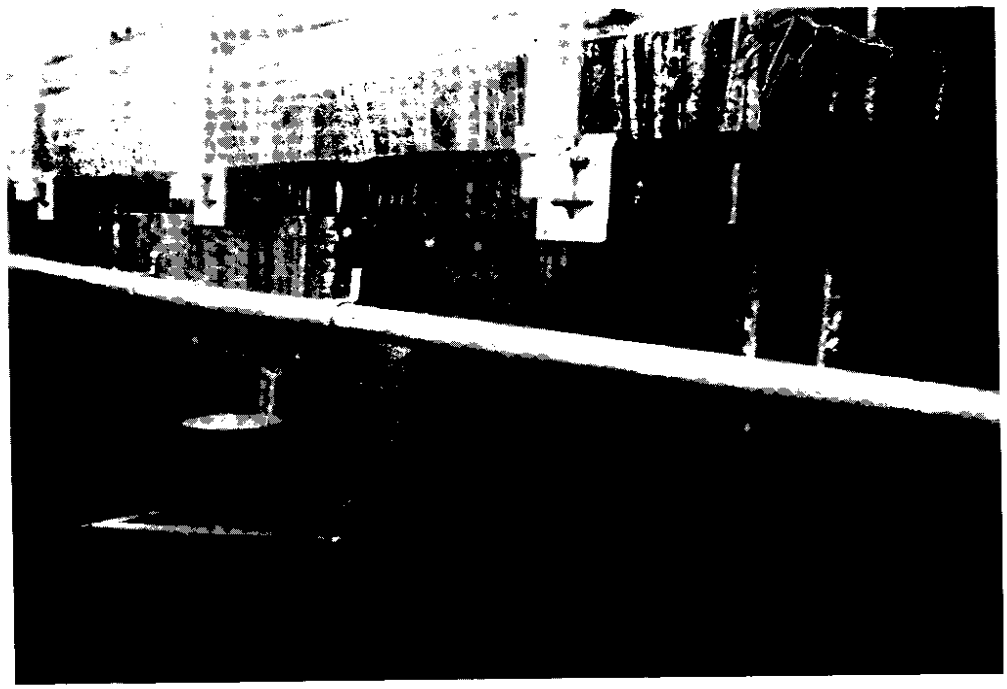

MIDDLE NEMAH RIVER: RAIL POST TUBE INSTALLATION OF DISTRIBUTION PLATE.

MIDDLE NEMAH RIVER: TRANSITION OF THRIE-BEAM TO STANDARD W-BEAM GUARD RAIL.

DEMONSTRATION PROJECT 64
SERVICE LEVEL 1 BRIDGE RAIL

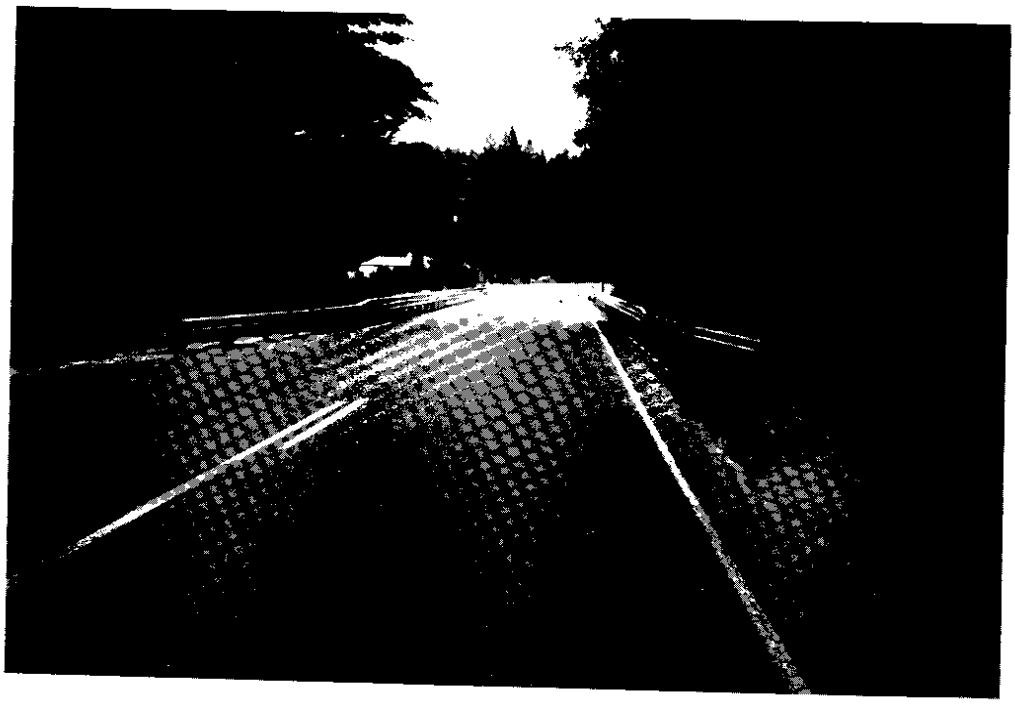

COULTER CREEK: COMPLETED SERVICE LEVEL 1 BRIDGE RAIL WITH COMPLETED APPROACH GUARD RAIL.

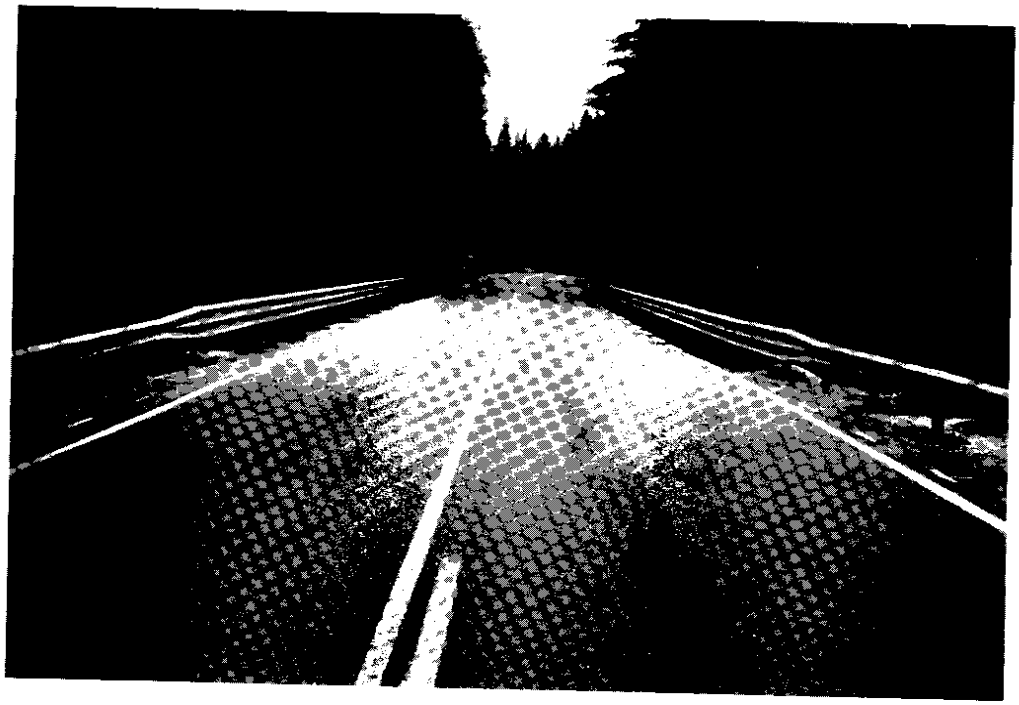

COULTER CREEK: COMPLETED SERVICE LEVEL 1 BRIDGE WITH COMPLETED APPROACH GUARD RAIL.

DEMONSTRATION PROJECT 64
SERVICE LEVEL 1 BRIDGE RAIL

COULTER CREEK: BEFORE INSTALATION OF BRIDGE RAIL.

DEMONSTRATION PROJECT 64
SERVICE LEVEL 1 BRIDGE RAIL

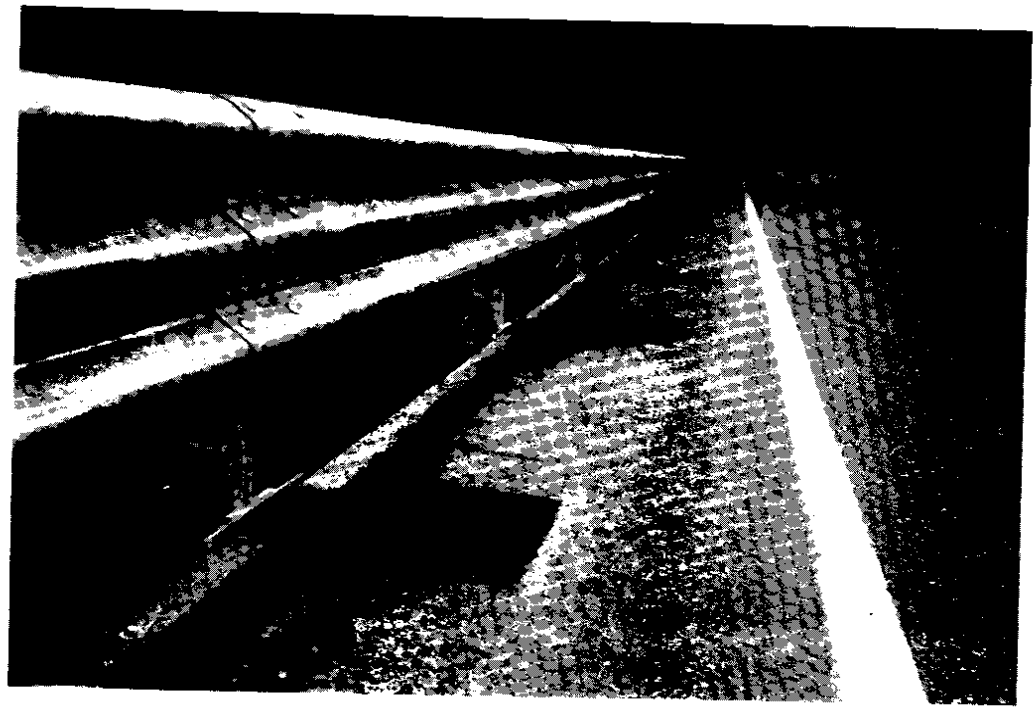

COULTER CREEK: COMPLETED INSTALLATION OF SERVICE LEVEL 1 BRIDGE RAIL.

DEMONSTRATION PROJECT 64
SERVICE LEVEL 1 BRIDGE RAIL

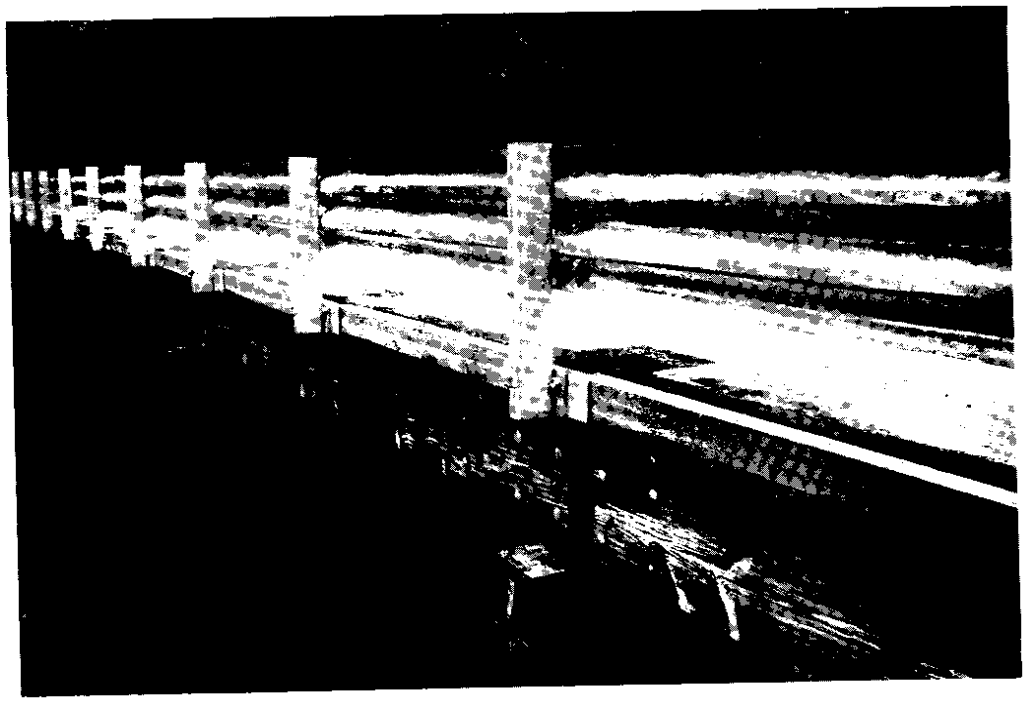

COULTER CREEK: RAIL POST TUBE INSTALLATION OF DISTRIBUTION PLATE.

COULTER CREEK: TRANSITION OF THRIE-BEAM TO STANDARD W-BEAM GUARD RAIL.