Washington State
Department of Transportation

Lynn Peterson
Secretary of Transportation

WSDOT Ferries Division (WSF)
2901 3rd Avenue, Suite 500
Seattle, WA 98121-3014

206-515-3400
TTY 1-800-833-6388
www.wsdot.wa.gov/ferries

September 8, 2014

K & N.
415 N. Fancher
Spokane Valley, WA 99212
Attn: Mr. Jerry Schmidlkofer

Subject: EMERGENCY CONTRACT, M.V. TACOMA, INTERNAL WSF NO. 15/2348

This letter is to confirm our request for your services to perform emergency work as described in the following paragraph to the M.V. TACOMA. When signed by your company's representative it will constitute a Contract between your company and the Department of Transportation, Ferries Division, in accordance with Revised Code of Washington 47.56.030, the current edition of the Standard Specifications for Road, Bridge, and Municipal Construction, Division 1 is made a part of this Contract.

Compensation for this work will be made on a time and materials basis. You are hereby authorized to perform the following work: Repairs of the MV. Tacoma propulsion switchboards to open, disassemble, clean, repair, reassemble, test, and certify the Number 3 and Number 4 propulsion switchboard sections in their entirety; Inspect, repair and certify the Number 3 and Number 4 switchboard cubicles structural integrity; Evaluate the need to have bottom panels installed in the all the switchboard cubicles; Evaluate the current installation and operation of theF14 phase loss relays; Evaluate the suitability of the currently installed surge suppressors; Inspect and test the Number 1 and number 2 switchboard sections in their entirety; Replace the propulsion cables from the NO.3 and NO.4 propulsion generators to their respective switch boards in their entirety; Provide onsite Siemens technician during the entire duration of this work; Provide the services of Siemens Industry Inc. to recondition and certify all (4) propulsion generator breakers, all (4) propulsion motor breakers and both (2) propulsion bus tie breakers; Provide the services of Siemens Industry Inc. to recondition and certify all eight (8) medium voltage contactors; and other work to make necessary repairs as authorized by WSF Project Engineer. All repair work including final testing shall be completed no later than December 5, 2014.

Preform a root cause analyst of the causality and provide a written report of the findings not later than November 26, 2014.

Provide the services of Siemens Industry Inc. to complete an engineering review of the entire propulsion switchboard and provide a report of findings and recommendations of possible needed updates and or necessary changes. This shall be accomplished in parallel with the repair and recommissioning of the switchboard. Provide a schedule and completion date of engineering review.

Point of contact for Siemens Industry Inc. is Daniel Enge, PMP Manager Marine Service, 770-740-3570 (Office) or 404-934-0869 (Cell)

Washington State Ferries

Please sign both originals and return one to Washington State Ferries, Vessel Engineering Department, Attn: Steven Peters, 2901 Third Avenue, Suite 500, Seattle, WA 98121. Thank you.

Sincerely,

Steven Peters
Vessel Project Engineer
Washington State Ferries

Acceptance by: K & N

Jerry Schmidlkofer 4-9-14
Jerry Schmidlkofer Date

WSF Construction Sub Program W, X, or Both
Director's Work Order Authorization Request

WIN M81031I

Date Request Submitted to Vessel Work Order Specialist:	9/23/2014; updated 10/10/2014
Work Order Manager:	Tim Browning
Phase: *(Indicate PE, RW or CN if work order is new)*	CN
Work Order Number: *(Enter existing number or indicate "New")*	00-NEW
Work Order Title: *(Only if this is a new work order)*	MV Tacoma Emergency Repair

Dollars Requested:	$1,800,000.00

Description of Work Being Authorized:	Repair the damaged Propulsion Switchboard and perform design review of the switchboard to determine root cause and implement any fixes identified during same.

Work Order Justification:	This work is required to maintain and preserve the vessel in a safe, reliable, and efficient material condition.

Notes:	Emergency Repair Project Engineer: Steve Peters Work Period: Sept. 9th - Dec. 5th, 2014 To Accounting: Setup Groups as follows: **GC01** Group 01 Emer Repair; K and N; 981031F; $1,093,245.00 **GC02** Group 32 Emer Repair; Global Diving-UCB1233; 981031F; $20,436.00 **GC03** Group 61 CE-Emergency Repair; 981031F; 100% Distribution Total = $160,000 **GC06 Contingency** NO Group; 981031F; $461,403.06 **GC99** Group 31 Emer Repair; Foss; 981031F; $14,915.94 Group 33 Emer Repair; Siemens-Other; 981031F; $50,000

Name of Person Releasing:	T. Browning / R. Hiller / Sio Ng

Attachments as appropriate: Task Order Cover Page

X Cost Estimate (only for contract work orders)
___ Other

Job No		Group Title				
Grp Cat No. (See Table 1)	Fin Code	Agreement No.	PIN (See Table 2)	Control Sec (See Table 3)	Total Amount Requested	'13-'15 Amount Requested
					$1,800,000.00	
00NEW-01		Emer Repair; K and N; 981031F; $1,093,245.00				
GC01	AO		981031F	810300	$1,093,245.00	$1,093,245.00
				"		
00NEW-32		Emer Repair; Global Diving-UCB1233; 981031F; $20,436.00				
GC02	AO	UCB1233-0	981031F	810300	$20,436.00	$20,436.00
				"		
00NEW-60		Emergency Repair State Force; 981031F; $160,000				
GC03	AO		981031F	810300	$160,000.00	160,000.00
61				"		$160,000.00 100%
00NEW		Contingency				
GC06	AO		981031F	810300	$461,403.06	$461,403.06
No Group				"		
00NEW-31		Emer Repair; Foss; 981031F; $14,915.94				
GC99	AO		981031F	810300	$14,915.94	$14,915.94
				"		
00NEW-33		Emer Repair; Siemens-Other; 981031F; $50,000				
GC99	AO		981031F	810300	$50,000.00	$50,000.00
				"		

CPMS PINs			
		GC01	$1,093,245.00
		GC02	$20,436.00
		GC03	$160,000.00
		GC04	$0.00
		GC06	$461,403.06
981031F	$1,800,000.00	GC99	$64,915.94
	$1,800,000.00		$1,800,000.00

		Before	After	Auth Code
981031F; AO	$1,800,000.00	902694	($897,306.00)	PCRF Needed
				N-Line
				N-Line
				N-Line
				N-Line
	$1,800,000.00			

WIN

M98910D

Tacoma Switchboard Emergency Repairs Estimate

Task	Estimated Cost	Quantity	Total
Breaker Initial Inspection	$750	11	$8,250
Contactor Initial Inspection	$750	8	$6,000
Engineering Design Review	$110,745	1	$110,745
Root Cause Analysis	$125,000	1	$125,000
Breaker #3 & #4 Repair	$50,000	2	$100,000
Remaining Breaker Overhaul	$10,000	9	$90,000
Contactor Overhaul	$10,000	8	$80,000
Replace Cabling #3 & #4 Gens	$75,000	2	$150,000
Bussing Replacement	$80,000	1	$80,000
Replace Surge Arrestors	$250	9	$2,250
Disassemble/Assemble Switch Board	$175,000	1	$175,000
Siemens Tech Rep	$102,000	1	$102,000
Testing	$64,000	1	$64,000
		Total	$1,093,245
		Contingency @ 50%	$546,623
		Grand Total	$1,639,868

The above estimate is a rough order of magnitude as the entire scope of the damage has yet to be identified.

WSF Construction Sub Program W, X, or Both
Director's Work Order Authorization Request

WIN M81031I

Date Request Submitted to Vessel Work Order Specialist:	9/23/2014; updated 10/10/2014
Work Order Manager:	Tim Browning
Phase: *(Indicate PE, RW or CN if work order is new)*	CN
Work Order Number: *(Enter existing number or indicate "New")*	00-NEW
Work Order Title: *(Only if this is a new work order)*	MV Tacoma Emergency Repair

Dollars Requested:	$1,800,000.00

Description of Work Being Authorized:	Repair the damaged Propulsion Switchboard and perform design review of the switchboard to determine root cause and implement any fixes identified during same.

Work Order Justification:	This work is required to maintain and preserve the vessel in a safe, reliable, and efficient material condition.

Notes:	Emergency Repair Project Engineer: Steve Peters Work Period: Sept. 9th - Dec. 5th, 2014 To Accounting: Setup Groups as follows: **GC01** Group 01 Emer Repair; K and N; 981031F; $1,093,245.00 **GC02** Group 32 Emer Repair; Global Diving-UCB1233; 981031F; $20,436.00 **GC03** Group 61 CE-Emergency Repair; 981031F; 100% Distribution Total = $160,000 **GC06 Contingency** NO Group; 981031F; $461,403.06 **GC99** Group 31 Emer Repair; Foss; 981031F; $14,915.94 Group 33 Emer Repair; Siemens-Other; 981031F; $50,000

Name of Person Releasing:	T. Browning / R. Hiller / Sio Ng

Attachments as appropriate: ___ Task Order Cover Page

X Cost Estimate (only for contract work orders)
___ Other

Job No		Group Title				
Grp Cat No. (See Table 1)	Fin Code	Agreement No.	PIN (See Table 2)	Control Sec (See Table 3)	Total Amount Requested	'13-'15 Amount Requested
					$1,800,000.00	
00NEW-01		Emer Repair; K and N; 981031F; $1,093,245.00				
GC01	AO		981031F	810300	$1,093,245.00	$1,093,245.00
				"		
00NEW-32		Emer Repair; Global Diving-UCB1233; 981031F; $20,436.00				
GC02	AO	UCB1233-0	981031F	810300	$20,436.00	$20,436.00
				"		
00NEW-60		Emergency Repair State Force; 981031F; $160,000				
GC03	AO		981031F	810300	$160,000.00	160,000.00
61				"		$160,000.00 100%
00NEW		Contingency				
GC06	AO		981031F	810300	$461,403.06	$461,403.06
No Group				"		
00NEW-31		Emer Repair; Foss; 981031F; $14,915.94				
GC99	AO		981031F	810300	$14,915.94	$14,915.94
				"		
00NEW-33		Emer Repair; Siemens-Other; 981031F; $50,000				
GC99	AO		981031F	810300	$50,000.00	$50,000.00
				"		

CPMS PINs			
		GC01	$1,093,245.00
		GC02	$20,436.00
		GC03	$160,000.00
		GC04	$0.00
		GC06	$461,403.06
981031F	$1,800,000.00	GC99	$64,915.94
	$1,800,000.00		$1,800,000.00

		Before	After	Auth Code
981031F; AO	$1,800,000.00	902694	($897,306.00)	PCRF Needed
				N-Line
				N-Line
				N-Line
				N-Line
	$1,800,000.00			

WIN

M98910D

Tacoma Switchboard Emergency Repairs Estimate

Task	Estimated Cost	Quantity	Total
Breaker Initial Inspection	$750	11	$8,250
Contactor Initial Inspection	$750	8	$6,000
Engineering Design Review	$110,745	1	$110,745
Root Cause Analysis	$125,000	1	$125,000
Breaker #3 & #4 Repair	$50,000	2	$100,000
Remaining Breaker Overhaul	$10,000	9	$90,000
Contactor Overhaul	$10,000	8	$80,000
Replace Cabling #3 & #4 Gens	$75,000	2	$150,000
Bussing Replacement	$80,000	1	$80,000
Replace Surge Arrestors	$250	9	$2,250
Disassemble/Assemble Switch Board	$175,000	1	$175,000
Siemens Tech Rep	$102,000	1	$102,000
Testing	$64,000	1	$64,000
		Total	$1,093,245
		Contingency @ 50%	$546,623
		Grand Total	$1,639,868

The above estimate is a rough order of magnitude as the entire scope of the damage has yet to be identified.

Siemens Marine Solutions
Commissioning & Field Services Report

REPORT BY: Fritz Schuckert
REPORT NO: 1914
DATE: 08-11-2014
JOB NO. :
REPORT PERIOD: 08/03 – 08/12/2014

DISTRIBUTION:

SII/CS/Marine-Services

1. SERVICE / PROJECT NAME IDENTIFICATION:

Washington-State-Ferry, WSF "Tacoma" Investigation of "July-29th" Incident

2. CUSTOMER & WORK LOCATION:

Owner / Operator:	WSF
Vessel Name:	"TACOMA"
IMO No.:	1052576
Contact Person:	Staff C/E Ben Davis
Work Location	Eagle Harbor
City / State / Zip:	Bainbridge, WAQ

3. EQUIPMENT SERVICED / SERIAL NUMBERS:

HV-Switchboard-2, Siemens-Canada, 4,76 kV, Type: 83K20, April 1995, ASEZ278

4. SERVICE ACTIVITIES PERFORMED / SUMMARY:

WSF asked Siemens-Atlanta to investigate the incident from July 29th at 12:31 PDT which caused a Black-Out of the 480 V Bus-System and substantial damage to the HV-Cubicle for Alternator-3 and Alternator-4. There was also minor damage at the HV-Feeder for Excitation-Transformer AC1.

Although the 4,16 kV Bus-System had a temporary-voltage dip, it did not Black-Out. Generator-1 and Bus-Tie did not trip during the incident. Bus-Voltage dipped to 1.1 kV for ~ 1.5 sec.

An additional report, covering damage-assessment (incl. photos) and required parts for repair, will be furnished by Siemens's Switchgear-Div. in Seattle. (Mr. Loren Bailey)

The interpretation of the recorded signals must consider the fact that some of the transducer-signals are filtered (up to 200 msec) and various channels are configured at different scan-rates (up to 500 msec) at the IBA/PDA Data-Acquisition System. In other words, some of the actual signals/values may have looked quite different than depicted at the chart-recordings.

Confirmed as being "totally" damaged: 2 PT-Fuses Alternator-4 (both blown)
3 PT-Fuses Alternator-3 (all disintegrated)
3 Surge-Limiter Alternator-4 (Phase-1 exploded, 2 other damaged)
3 Surge-Limiter Alternator-3 (Phase-3 exploded, 2 other damaged)
1 Surge-Limiter Excitation-Transformer AC1 (Phase-1 damaged)
1 HV Power-Fuse Excitation-Transformer AC1 (Phase-1 blown)
Some insulators, copper-bars and metal-parts in Cubicle-3 and 4

Being partially damaged (Arc-Flash): 3 PT's Alternator-3
HV Power-Cables Alternator-3 and 4
Partitions in Cubicle-3 and 4
Control-Wire harness Cubicle-3

Although it may be decided to have the following items re-tested and/or replaced, some preliminary testing confirmed that they do not show any obvious electrical damage. The results from these tests are only used as supportive tool to establish a probable "sequence of events".

All PT's for Alternator-4 and 3 checked ok.
6 Rotating-Diodes each, Alternator-1, -3 and 4 checked ok.
Alternator-1, -3 and 4 checked ok.
HV Cable Alternator-3 and 4 checked ok.
HV Vacuum-Breaker Alternator-3 and 4 checked ok.

July 29th 2014, Sequence of Events:

Arriving at Seattle-Dock

11:51:56 Alternator-4 taken offline @ 0.27 PU Amp

11:51:58 Over-Voltage Alarm Alternator-4

11:51:58 Alternator-4 PT-Fuse(s) Phase-1 and Phase-3 blown due to Voltage-Surge.

11:53:15 Over-Voltage Alarm for Alternator-4, Acknowledged

Leaving Seattle-Dock

12:10 Alternator-1 and 3 online

Approaching Bainbridge-Dock

12:30:48 Start of Alternator-4.

Note: AVR for Alternator-4 will cause an actual, but undetected Over-Voltage because missing PT Voltage Feedback due to blown PT-Fuse(s).

12:31:00 Closing of Alternator-4 HV-Breaker although Phasing/Voltage is not matched.

Note: Because 2 out of 3 PT-Fuses are blown, the Alternator PT Voltage Feedback becomes erratic and unreliable. This "false" Voltage-Feedback allowed Breaker-Closure.

12:31:00 Current-Surge affecting all online Alternators because severely mismatched synchronization with subsequent severe Voltage-Dip at the whole Bus-System.

12:31:00 Instant opening of Alternator-4 Breaker due to presence of Under-Voltage Trip-Signal from F11.

12:31:01 Several Under-Voltage Alarms are reported at Bus-1 and Bus-2 as well as at the electric propulsion system.

12:31:01 Alternator-1 and 3 lost their Synchronisms due to severe voltage-dip.

Note: This causes the reactive currents between the two remaining Alternators to rise to very high levels and also prevents a Bus-Voltage built-up.

12:31:01 Alternator-3 HV-Breaker opens with subsequent current-decay and rising Bus-voltage, fed from Alternator-1 which remains online.

12:31:02 Alternator-3 and 4 Diff-Trip is generated. (Alternator-3: 672%, Alternator-4: 368%)

Remarks: Alternator-3 and 4 Over-Current Relays registered an Over-current condition, but did not time-out. Therefore no trip-signal was issued.

Because the extensive compartment/component-damage and limited data available, several attempts and different approaches to explain the exact timing and source of Arcing/Flash-Over failed.

However, the following explains the Root-Cause of the Main-Event.

1) A previous, related Overvoltage Alarm got acknowledged without further investigation.

2) A partial Alternator PT Fuse-Loss (e.g. 2 out of 3 Fuses lost) goes unnoticed because an Idiosyncrasy of the PT-circuitry in conjunction with the installed Phase-Loss Relay F14.

   See attached PT Test-Results.

3) The installed Woodward Synchronizer A1 does not monitor the Voltages, only the Phasing.

4) The installed 3-Phase-Loss Relay F14, measures Phase to Neutral Voltages. It does not sense a Phase to Phase Voltage-Loss. In other words, if it receives 3 identical, "in-phase" Voltages as generated during a Fuse-Loss, it will issue an "All-3-Phases-Healthy" Status, although two of the actual Alternator Phase-Voltages are missing.

   See attached PT Test-Results.

5) 2) 3) and 4) allowed the Alternator-4 Breaker to be closed, although Voltage and Phase did not match. Breaker Closure under these conditions will cause a current-surge with a subsequent sever Bus-Voltage Dip.

6) Under-voltage Relay F11 (measuring Phase to Phase Voltage) trips Alternator-4 Breaker instantly upon its Closure.

7) A severe bus-voltage dip causes Alternator-1 and 3 to "Slip" and to lose Synchronism with a subsequent rise of reactive current between the two Alternators to very high levels.

   Note: Breaking of high Alternator-Currents with Vacuum Breaker will result in power-full Voltage-Surges with possible loss of Surge-Limiters and Arcing/Flash-Over.

As an immediate (short-term) solution the following is recommended:

1) Operator verifies Alternator-Voltage with ECR panel-meter and waits additional 10 sec, after confirming nominal-voltage (+/- 3%) before issuing an Auto-Close command.

2) Replace existing Synchronizer A1 with Model 9905-003 or similar.

3) Replace or re-configure Phase-Loss Relay F14, in order that all 3 "Phase to Phase" Voltages are monitored.

Note: The same switch-board equipment is installed onboard two of "Tacoma's" sister-vessels which are presently operated by WSF.

5. ATTACHMENTS:

- PDA-CHARTS
- ALARM PRINT-OUTS
- SWBD-DIAGRAMMS
- PROTECTIVE RELAYS
- MEGGER-READINGS
- PT-MEASUREMENTS
- PT BENCH-TEST
- SETTINGS
- PLC-LOGIC

Fritz Schuckert
Consulting Service Engineer

Siemens Industry Inc
Marine Services

Email: austrotec@cs.com
Mobile Phone: 678-429-7123

Generator actual power G1
Generator actual power G4
Generator actual power G3
Sec
Generator actual current G1
Generator actual current G4
Generator actual current G3
Normal Shut-Down, Alternator-4
Sec
A103 Generator Voltage G1 (kV)
A403 Generator Voltage G4 (kV)
A303 Generator Voltage G3 (kV)
Sec
Circuit breaker closed generator 1
Circuit breaker closed generator 4
Circuit breaker closed generator 3
Sec
10:59:15
10:59:30
10:59:45
11:00:00
11:00:15
11:00:30
11:00:45
11:01:00
11:01:15
11:01:30
11:01:45
11:02:00
11:02:15
11:02...

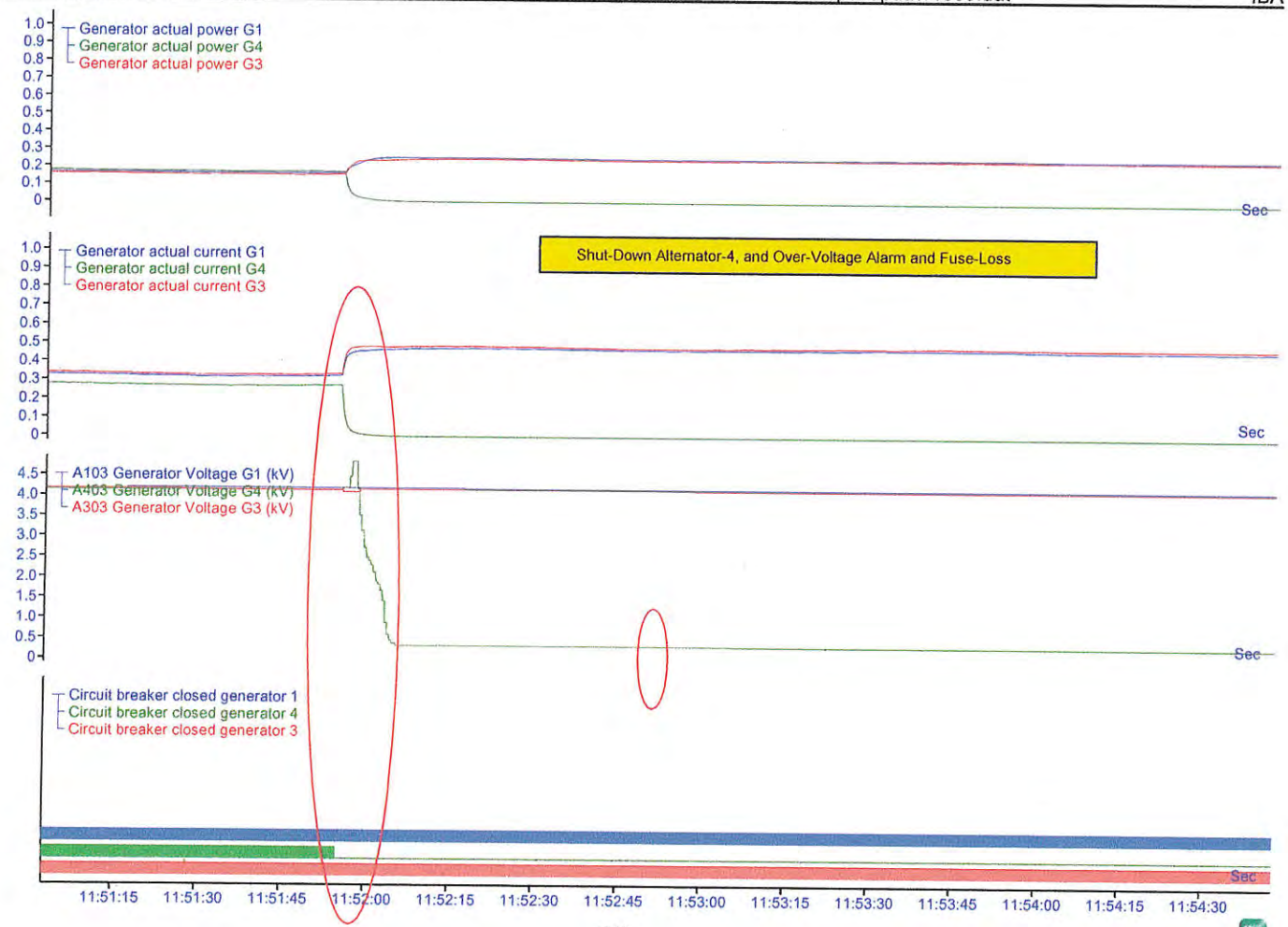
Generator actual power G1
Generator actual power G4
Generator actual power G3
Sec
Shut-Down Alternator-4, and Over-Voltage Alarm and Fuse-Loss
Generator actual current G1
Generator actual current G4
Generator actual current G3
Sec
A103 Generator Voltage G1 (kV)
A403 Generator Voltage G4 (kV)
A303 Generator Voltage G3 (kV)
Sec
Circuit breaker closed generator 1
Circuit breaker closed generator 4
Circuit breaker closed generator 3
Sec
11:51:15
11:51:30
11:51:45
11:52:00
11:52:15
11:52:30
11:52:45
11:53:00
11:53:15
11:53:30
11:53:45
11:54:00
11:54:15
11:54:30

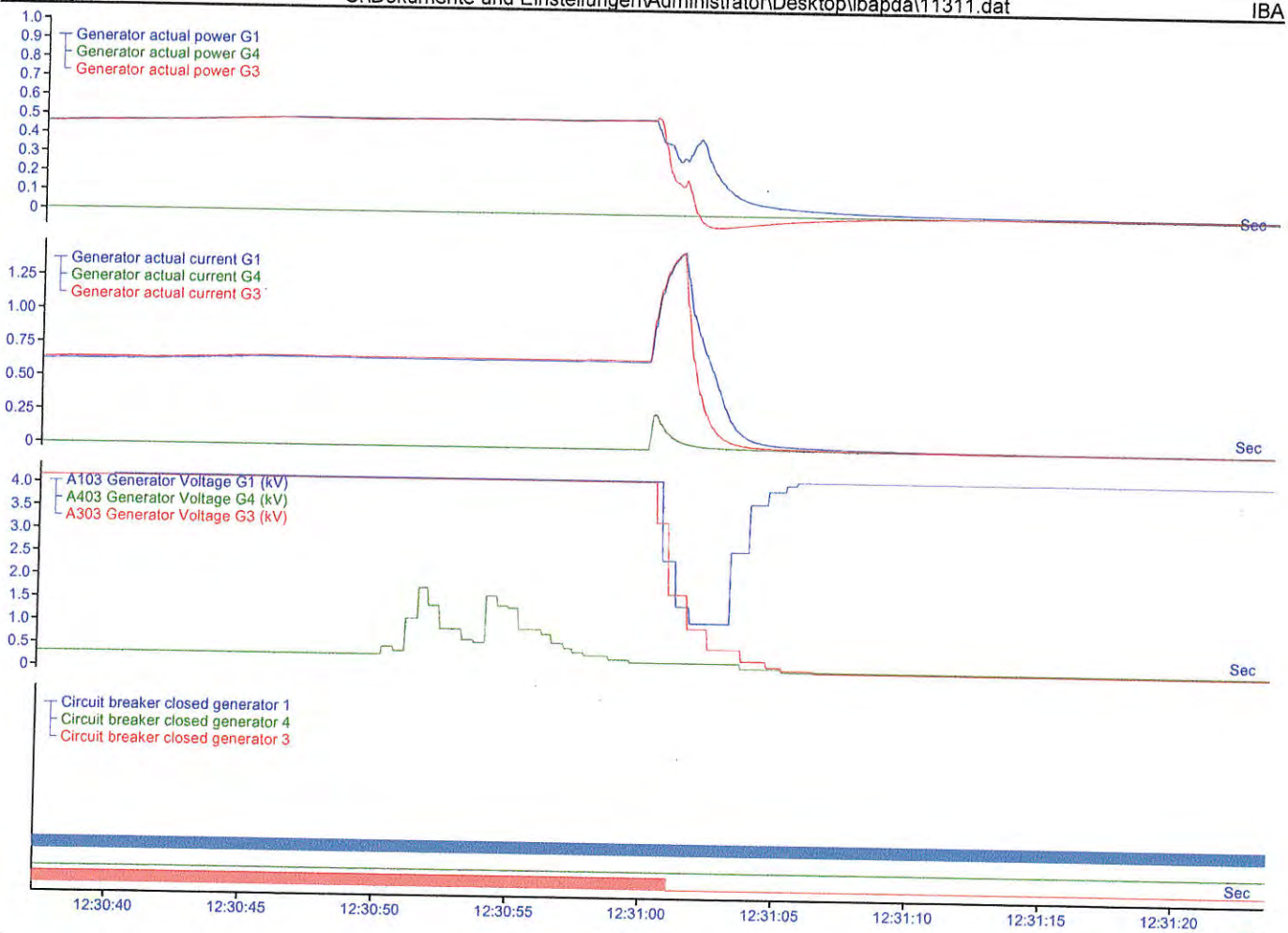
Generator actual power G1
Generator actual power G4
Generator actual power G3
Sec
Generator actual current G1
Generator actual current G4
Generator actual current G3
Sec
A103 Generator Voltage G1 (kV)
A403 Generator Voltage G4 (kV)
A303 Generator Voltage G3 (kV)
Sec
Circuit breaker closed generator 1
Circuit breaker closed generator 4
Circuit breaker closed generator 3
Sec
12:30:40
12:30:45
12:30:50
12:30:55
12:31:00
12:31:05
12:31:10
12:31:15
12:31:20

Alarm Log

File View Customize Actions Help

Active Alarms

Alarm Log

S...	Alarm Point	Description	Start Time	End Time	Acknowledge Time	Alarm Status	Worst Value	End date	Current Value	Start Date	Acknowledge D...	Alar...
	I804	PASSENGER ELEVATOR TROUBLE	11:45:58 AM 420	11:45:58 AM 820		ALARM	ALARM	7/29/2014	Normal	7/29/2014		961
	I804	PASSENGER ELEVATOR TROUBLE	11:45:59 AM 430	11:46:00 AM 460	11:46:50 AM 030	ALARM	ALARM	7/29/2014	Normal	7/29/2014	7/29/2014	961
	A404	ALT4 V HIGH	11:51:58 AM 180	11:51:59 AM 100	11:53:25 AM 820	TRIPPED	TRIPPED	7/29/2014	Normal	7/29/2014	7/29/2014	965
	E425	ME4 FO PRESS	11:55:23 AM 420	11:55:23 AM 820	11:55:56 AM 590	ALARM	20	7/29/2014	0	7/29/2014	7/29/2014	2002
	E435	ME4-DIESEL CTRL PNL SUM ALARM	12:30:42 PM 670	12:31:00 PM 000	1:20:30 PM 240	ALARM	ALARM	7/29/2014	Blocked	7/29/2014	7/29/2014	961
	A311	ALT3 FREQ	12:31:00 PM 870	12:31:02 PM 270	1:20:30 PM 180	H.W.ERROR	60	7/29/2014	60	7/29/2014	7/29/2014	2004
	A503	END2 TIE BKR BUS FREQ	12:31:00 PM 870	12:31:02 PM 270	1:20:30 PM 230	H.W.ERROR	60	7/29/2014	57	7/29/2014	7/29/2014	2004
	Y146	ST GEAR 1- FU STEERING FAILURE	12:31:00 PM 980	12:31:13 PM 070		ALARM	ALARM	7/29/2014	ALARM	7/29/2014		961
	Y246	ST GEAR 2 - FU STEERING FAILURE	12:31:00 PM 980	12:31:13 PM 070		ALARM	ALARM	7/29/2014	ALARM	7/29/2014		961
	A111	ALT1 FREQ	12:31:01 PM 130	12:31:02 PM 530	1:20:30 PM 270	H.W.ERROR	60	7/29/2014	56	7/29/2014	7/29/2014	2004
	A504	END1 BUS FREQUENCY	12:31:01 PM 130	12:31:02 PM 530	1:20:03 PM 930	H.W.ERROR	60	7/29/2014	57	7/29/2014	7/29/2014	2004
	A509	END2 TIE BKR BUS V	12:31:01 PM 270	12:31:02 PM 270	1:20:30 PM 180	ALARM	3.67	7/29/2014	0.00	7/29/2014	7/29/2014	2002
	S205	PM BRG 2 1 HTR & OIL LVL 30%	12:31:01 PM 270	12:31:01 PM 770	1:20:30 PM 180	ALARM	ALARM	7/29/2014	Blocked	7/29/2014	7/29/2014	961
	S212	PM BRG 2 2 HTR & OIL LVL 30%	12:31:01 PM 270	12:31:01 PM 770	1:20:30 PM 180	ALARM	ALARM	7/29/2014	Blocked	7/29/2014	7/29/2014	961
	D242	END2 AIM 24V CHARGER FAULT	12:31:01 PM 390	12:31:27 PM 730		ALARM	ALARM	7/29/2014	Normal	7/29/2014		961
	T218	EXFMR 2 MAIN CONTACTOR TRIP	12:31:01 PM 470		1:20:30 PM 360	TRIPPED	TRIPPED		TRIPPED	7/29/2014	7/29/2014	965
	A509	END1 BUS VOLTAGE	12:31:01 PM 530	12:31:03 PM 430	1:20:30 PM 270	ALARM	2.84	7/29/2014	0.06	7/29/2014	7/29/2014	2002
	S105	PM BRG 1 1 HTR & OIL LVL 30%	12:31:01 PM 530	12:31:02 PM 470	1:20:21 PM 450	ALARM	ALARM	7/29/2014	Blocked	7/29/2014	7/29/2014	961
	S112	PM BRG 1 2 HTR & OIL LVL 30%	12:31:01 PM 530	12:31:02 PM 470	1:20:21 PM 450	ALARM	ALARM	7/29/2014	Blocked	7/29/2014	7/29/2014	961
	S126	PM BRG 1 3 HTR & OIL LVL 30%	12:31:01 PM 600	12:31:02 PM 550	1:20:21 PM 130	ALARM	ALARM	7/29/2014	Blocked	7/29/2014	7/29/2014	961
	E135	ME1-DIESEL CTRL PNL SUM ALARM	12:31:01 PM 630	12:45:41 PM 320	1:20:21 PM 130	ALARM	ALARM	7/29/2014	Blocked	7/29/2014	7/29/2014	961
	D142	END1 AIM 24V CHARGER FAULT	12:31:01 PM 660	12:31:27 PM 280		ALARM	ALARM	7/29/2014	Normal	7/29/2014		961
	X313	PM3 SITOR 1 UNDERVOLTAGE	12:31:01 PM 670	12:34:27 PM 080	1:20:20 PM 990	ALARM	ALARM	7/29/2014	Normal	7/29/2014	7/29/2014	961
	X413	PM4 SITOR 1 UNDERVOLTAGE	12:31:01 PM 670	12:34:27 PM 880	1:20:20 PM 990	ALARM	ALARM	7/29/2014	Normal	7/29/2014	7/29/2014	961
	L117	END1 MTR/ALT F/W LOW FLOW	12:31:01 PM 730	1:43:32 PM 430	1:20:21 PM 230	ALARM	ALARM	7/29/2014	ALARM	7/29/2014	7/29/2014	961
	L211	END2 SCR/BRG F/W FLOW LOW	12:31:01 PM 730	1:44:14 PM 840	1:20:21 PM 030	ALARM	ALARM	7/29/2014	ALARM	7/29/2014	7/29/2014	961
	A307	ALT3 CURRENT	12:31:01 PM 770	12:31:02 PM 270	1:20:21 PM 030	H.W.ERROR	665	7/29/2014	0	7/29/2014	7/29/2014	2004
	P212	PM3 DRIVE NOT READY	12:31:01 PM 770	1:51:36 PM 970	1:20:21 PM 030	ALARM	ALARM	7/29/2014	ALARM	7/29/2014	7/29/2014	961
	P179	PM3 EXCITATION 1 FAULT	12:31:01 PM 770	12:31:03 PM 670	1:20:21 PM 030	ALARM	ALARM	7/29/2014	Normal	7/29/2014	7/29/2014	961
	P213	PM4 DRIVE NOT READY	12:31:01 PM 770		1:20:21 PM 030	ALARM	ALARM		ALARM	7/29/2014	7/29/2014	961
	P183	PM4 EXCITATION 1 FAULT	12:31:01 PM 770	12:31:03 PM 670	1:20:21 PM 030	ALARM	ALARM	7/29/2014	Normal	7/29/2014	7/29/2014	961
	P201	PM3 EXCITATION SWITCHED OVER	12:31:01 PM 910	12:31:03 PM 270	1:20:21 PM 030	ALARM	ALARM	7/29/2014	Normal	7/29/2014	7/29/2014	961
	P209	PM4 EXCITATION SWITCHED OVER	12:31:01 PM 990	12:31:03 PM 340	1:20:21 PM 150	ALARM	ALARM	7/29/2014	Normal	7/29/2014	7/29/2014	961
	I701	No1 M/A SET MOTOR PWR (LW)	12:31:01 PM 990	12:31:02 PM 430	1:20:21 PM 430	H.W.ERROR	72	7/29/2014	2	7/29/2014	7/29/2014	2004
	I003	TCP CHRG FAULT	12:31:01 PM 940	12:31:21 PM 160		ALARM	ALARM	7/29/2014	Normal	7/29/2014		961
	A107	ALT1 CURRENT	12:31:01 PM 970	12:31:02 PM 530	1:20:21 PM 450	H.W.ERROR	665	7/29/2014	3	7/29/2014	7/29/2014	2004
	L111	END1 SCR/BRG F/W FLOW LOW	12:31:01 PM 978	1:43:44 PM 660	1:20:21 PM 450	ALARM	ALARM	7/29/2014	ALARM	7/29/2014	7/29/2014	961
	L217	END2 MTR/ALT F/W LOW FLOW	12:31:01 PM 979	1:44:09 PM 110	1:20:21 PM 210	ALARM	ALARM	7/29/2014	ALARM	7/29/2014	7/29/2014	961
	P172	PM3 INTERNAL DRIVE FAULT	12:31:02 PM 030	12:31:03 PM 460	1:20:21 PM 290	ALARM	ALARM	7/29/2014	Normal	7/29/2014	7/29/2014	961
	P173	PM4 INTERNAL DRIVE FAULT	12:31:02 PM 030	12:31:03 PM 460	1:20:21 PM 290	ALARM	ALARM	7/29/2014	Normal	7/29/2014	7/29/2014	961
	I461	END2 HR SW COOL 24 PMP FAULT	12:31:02 PM 170	12:31:03 PM 660	1:20:20 PM 880	ALARM	ALARM	7/29/2014	Normal	7/29/2014	7/29/2014	961
	I109	END1 MEMORY SAVE BUSE 1A FAULT	12:31:02 PM 190	12:31:03 PM 590	1:20:21 PM 290	TRIPPED	TRIPPED	7/29/2014	Normal	7/29/2014	7/29/2014	965

For Help, press F1

NUM

Page 1 Sec 1 1/1 At 0.1" Ln 1 Col 1

Start | Supervisor | Alarm Log | Untitled - E:\662903\Ba... | bapda | Microsoft Word - Docum... | bellida 6.20.2 - MI | 3GSS Alarm | 11:33 AM

Alarm Log

File View Customize Actions Help

Active Alarms

Alarm Log

S...	Alarm Point	Description	Start Time	End Time	Acknowledge Time	Alarm Status	Worst Value	End date	Current Value	Start Date	Acknowledge D...	Alar...
	P173	PM4 INTERNAL DRIVE FAULT	12:31:02 PM:030	12:31:03 PM:480	1:20:21 PM:290	ALARM	ALARM	7/29/2014	Normal	7/29/2014	7/29/2014	961
	I461	END2 HR SW COOL 2A PMP FAULT	12:31:02 PM:170	12:31:03 PM:660	1:20:20 PM:990	ALARM	ALARM	7/29/2014	Normal	7/29/2014	7/29/2014	961
	L109	END1 MCHRY S/W PUMP 1A FAULT	12:31:02 PM:190	12:31:03 PM:550	1:20:21 PM:230	TRIPPED	TRIPPED	7/29/2014	Normal	7/29/2014	7/29/2014	965
	L120	END1 MTR/ALT F/W PUMP 1A FAULT	12:31:02 PM:190	12:31:02 PM:650	1:20:21 PM:230	ALARM	ALARM	7/29/2014	Normal	7/29/2014	7/29/2014	961
	L107	END1 SCR/BRG F/W PUMP 1A FAULT	12:31:02 PM:190	12:31:03 PM:550	1:20:21 PM:230	TRIPPED	TRIPPED	7/29/2014	Normal	7/29/2014	7/29/2014	965
	M109	PM1 FAN 1B TRIP	12:31:02 PM:190	12:31:03 PM:550	1:20:21 PM:230	TRIPPED	TRIPPED	7/29/2014	Normal	7/29/2014	7/29/2014	965
	M110	PM1 FAN 1C TRIP	12:31:02 PM:190	12:31:03 PM:550	1:20:21 PM:230	TRIPPED	TRIPPED	7/29/2014	Normal	7/29/2014	7/29/2014	965
	M209	PM2 FAN 2B TRIP	12:31:02 PM:190	12:31:03 PM:550	1:20:21 PM:230	TRIPPED	TRIPPED	7/29/2014	Normal	7/29/2014	7/29/2014	965
	M210	PM2 FAN 2C TRIP	12:31:02 PM:190	12:31:03 PM:550	1:20:21 PM:230	TRIPPED	TRIPPED	7/29/2014	Normal	7/29/2014	7/29/2014	965
	A309	ALT3 DIFF PROTECTION	12:31:02 PM:270	12:31:17 PM:610	1:20:12 PM:250	TRIPPED	TRIPPED	7/29/2014	Normal	7/29/2014	7/29/2014	965
	A409	ALT4 DIFF PROTECTION	12:31:02 PM:270	12:31:17 PM:380	1:20:12 PM:250	TRIPPED	TRIPPED	7/29/2014	Normal	7/29/2014	7/29/2014	965
	S235	END2 S/TUBE LUBO PUMP FAULT	12:31:02 PM:320	12:31:03 PM:740	1:20:12 PM:310	ALARM	ALARM	7/29/2014	Normal	7/29/2014	7/29/2014	961
	I416	ME1 - HT/REC PMP FAULT SUM ALM	12:31:02 PM:430	12:31:14 PM:250		ALARM	ALARM	7/29/2014	Normal	7/29/2014		961
	I426	ME2 - HT/REC PMP FAULT SUM ALM	12:31:02 PM:430	12:31:14 PM:250		ALARM	ALARM	7/29/2014	Normal	7/29/2014		961
	X116	PM1 SITOR 2 UNDERVOLTAGE	12:31:02 PM:430	12:34:27 PM:840	1:20:11 PM:930	ALARM	ALARM	7/29/2014	Normal	7/29/2014	7/29/2014	961
	X213	PM2 SITOR 1 UNDERVOLTAGE	12:31:02 PM:430	12:34:27 PM:840	1:20:11 PM:930	ALARM	ALARM	7/29/2014	Normal	7/29/2014	7/29/2014	961
	P214	END1 FREQUENCY LIMITER ACTIVE	12:31:02 PM:470	12:31:04 PM:260	1:20:12 PM:000	ALARM	ALARM	7/29/2014	Normal	7/29/2014	7/29/2014	961
	L209	END2 MCHRY S/W PUMP 2A FAULT	12:31:02 PM:470	12:31:03 PM:870	1:20:12 PM:000	TRIPPED	TRIPPED	7/29/2014	Normal	7/29/2014	7/29/2014	965
	L207	END2 SCR/BRG F/W PUMP 2A FAULT	12:31:02 PM:470	12:31:03 PM:870	1:20:12 PM:010	TRIPPED	TRIPPED	7/29/2014	Normal	7/29/2014	7/29/2014	965
	T418	EXFMR 4 MAIN CONTACTOR TRIP	12:31:02 PM:470	12:31:04 PM:320		TRIPPED	TRIPPED	7/29/2014	TRIPPED	7/29/2014		965
	P210	PM1 DRIVE NOT READY	12:31:02 PM:470	1:49:36 PM:590	1:20:12 PM:000	ALARM	ALARM	7/29/2014	ALARM	7/29/2014	7/29/2014	961
	P180	PM1 EXCITATION 2 FAULT	12:31:02 PM:470	12:31:04 PM:280	1:20:12 PM:000	ALARM	ALARM	7/29/2014	Normal	7/29/2014	7/29/2014	961
	P211	PM2 DRIVE NOT READY	12:31:02 PM:470		1:20:12 PM:000	ALARM	ALARM		ALARM	7/29/2014	7/29/2014	961
	M309	PM3 FAN 3A TRIP	12:31:02 PM:470	12:31:03 PM:870	1:20:12 PM:000	TRIPPED	TRIPPED	7/29/2014	Normal	7/29/2014	7/29/2014	965
	M310	PM3 FAN 3C TRIP	12:31:02 PM:470	12:31:03 PM:870	1:20:12 PM:000	TRIPPED	TRIPPED	7/29/2014	Normal	7/29/2014	7/29/2014	965
	M409	PM4 FAN 4A TRIP	12:31:02 PM:470	12:31:03 PM:870	1:20:12 PM:000	TRIPPED	TRIPPED	7/29/2014	Normal	7/29/2014	7/29/2014	965
	M410	PM4 FAN 4C TRIP	12:31:02 PM:470	12:31:03 PM:870	1:20:12 PM:000	TRIPPED	TRIPPED	7/29/2014	Normal	7/29/2014	7/29/2014	965
	T412	EXFMR 4 MAIN CB TRIP	12:31:02 PM:470	12:31:04 PM:320		TRIPPED	TRIPPED	7/29/2014	TRIPPED	7/29/2014		965
	S135	END1 S/TUBE LUBO PUMP FAULT	12:31:02 PM:550	12:31:03 PM:890		ALARM	ALARM	7/29/2014	Normal	7/29/2014		961
	P200	PM1 EXCITATION SWITCHED OVER	12:31:02 PM:550	12:31:04 PM:350	1:20:12 PM:050	ALARM	ALARM	7/29/2014	Normal	7/29/2014	7/29/2014	961
	P202	PM2 PHASE A SWITCHED OVER	12:31:02 PM:550	12:31:03 PM:030	1:20:12 PM:050	ALARM	ALARM	7/29/2014	Normal	7/29/2014	7/29/2014	961
	X108	PM1 SITOR 1 AIR FLOW LOW	12:31:02 PM:630	12:31:03 PM:130	1:20:12 PM:110	ALARM	ALARM	7/29/2014	Normal	7/29/2014	7/29/2014	961
	X109	PM1 SITOR 2 AIR FLOW LOW	12:31:02 PM:630	12:31:03 PM:130	1:20:12 PM:110	ALARM	ALARM	7/29/2014	Normal	7/29/2014	7/29/2014	961
	P204	PM2 PHASE B SWITCHED OVER	12:31:02 PM:630	12:31:03 PM:090	1:20:12 PM:110	ALARM	ALARM	7/29/2014	Normal	7/29/2014	7/29/2014	961
	P206	PM2 PHASE C SWITCHED OVER	12:31:02 PM:630	12:31:03 PM:090	1:20:12 PM:110	ALARM	ALARM	7/29/2014	Normal	7/29/2014	7/29/2014	961
	I462	END2 HR SW COOL 2B PMP FAULT	12:31:02 PM:670	12:31:04 PM:070		ALARM	ALARM	7/29/2014	Normal	7/29/2014		961
	I436	ME3 - HT/REC PMP FAULT SUM ALM	12:31:02 PM:670	12:31:14 PM:300		ALARM	ALARM	7/29/2014	Normal	7/29/2014		961
	I446	ME4 - HT/REC PMP FAULT SUM ALM	12:31:02 PM:670	12:31:14 PM:300		ALARM	ALARM	7/29/2014	Normal	7/29/2014		961
	P187	PM3 TRIP BY SIMADYN D	12:31:02 PM:670	12:31:04 PM:510		ALARM	ALARM	7/29/2014	Normal	7/29/2014		961
	P189	PM4 TRIP BY SIMADYN D	12:31:02 PM:670	12:31:04 PM:510		ALARM	ALARM	7/29/2014	Normal	7/29/2014		961
	T318	EXFMR 3 MAIN CONTACTOR TRIP	12:31:02 PM:680	12:31:04 PM:030		TRIPPED	TRIPPED	7/29/2014	TRIPPED	7/29/2014		965
	T312	EXFMR 3 MAIN CB TRIP	12:31:02 PM:680	12:31:04 PM:030		TRIPPED	TRIPPED	7/29/2014	TRIPPED	7/29/2014		965

For Help, press F1

NUM

Page 1 Sec 1 1/1 At 6.1" In 1 Col 1

Start | Supervisor | Alarm Log | Untitled - E:\66200\Ba... | ibapda | Microsoft Word - Docum... | Microsoft Word - Doc1.doc | ibaPda 5.20.2 - M1 | IGSS Alarm | 11:35 AM

Alarm Log

File View Customize Actions Help

Active Alarms

Alarm Log

S...	Alarm Point	Description	Start Time	End Time	Acknowledge Time	Alarm Status	Worst Value	End date	Current Value	Start Date	Acknowledge D...	Alar...
	P193	PM4 TRIP BY SIMADYN D	12:31:02 PM 670	12:31:04 PM 510		ALARM	ALARM	7/29/2014	Normal	7/29/2014		961
	T318	EXFMR 3 MAIN CONTACTOR TRIP	12:31:02 PM 690	12:31:04 PM 030		TRIPPED	TRIPPED	7/29/2014	TRIPPED	7/29/2014		965
	T312	PXFMR 3 MAIN CB TRIP	12:31:02 PM 690	12:31:04 PM 030		TRIPPED	TRIPPED	7/29/2014	TRIPPED	7/29/2014		965
	P170	PM1 INTERNAL DRIVE FAULT	12:31:02 PM 760	12:31:04 PM 130	1:20:12 PM 230	ALARM	ALARM	7/29/2014	Normal	7/29/2014	7/29/2014	961
	P171	PM2 INTERNAL DRIVE FAULT	12:31:02 PM 760	12:31:04 PM 130	1:20:12 PM 230	ALARM	ALARM	7/29/2014	Normal	7/29/2014	7/29/2014	961
	P215	END2 FREQUENCY LIMITER ACTIVE	12:31:02 PM 770	12:31:03 PM 670	1:20:12 PM 250	ALARM	ALARM	7/29/2014	Normal	7/29/2014	7/29/2014	961
	P195	PM3 PHASE A SWITCHED OVER	12:31:02 PM 820	12:31:03 PM 270	1:20:12 PM 330	ALARM	ALARM	7/29/2014	Normal	7/29/2014	7/29/2014	961
	P197	PM3 PHASE B SWITCHED OVER	12:31:02 PM 820	12:31:03 PM 270	1:20:12 PM 330	ALARM	ALARM	7/29/2014	Normal	7/29/2014	7/29/2014	961
	P199	PM3 PHASE C SWITCHED OVER	12:31:02 PM 820	12:31:03 PM 270	1:20:11 PM 880	ALARM	ALARM	7/29/2014	Normal	7/29/2014	7/29/2014	961
	P203	PM4 PHASE A SWITCHED OVER	12:31:02 PM 820	12:31:03 PM 270	1:20:11 PM 880	ALARM	ALARM	7/29/2014	Normal	7/29/2014	7/29/2014	961
	C318	TC3 B.1 ZERO CURR MONITOR FLT	12:31:02 PM 820	12:31:04 PM 670	1:20:12 PM 330	ALARM	ALARM	7/29/2014	Normal	7/29/2014	7/29/2014	961
	P205	PM4 PHASE B SWITCHED OVER	12:31:02 PM 990	12:31:03 PM 340	1:20:04 PM 040	ALARM	ALARM	7/29/2014	Normal	7/29/2014	7/29/2014	961
	P207	PM4 PHASE C SWITCHED OVER	12:31:02 PM 990	12:31:03 PM 340	1:20:04 PM 040	ALARM	ALARM	7/29/2014	Normal	7/29/2014	7/29/2014	961
	C327	TC3 C.1 ZERO CURR MONITOR FLT	12:31:02 PM 990	12:31:04 PM 760	1:20:04 PM 040	ALARM	ALARM	7/29/2014	Normal	7/29/2014	7/29/2014	961
	C409	TC4 A.1 ZERO CURR MONITOR FLT	12:31:02 PM 990	12:31:04 PM 700	1:20:04 PM 040	ALARM	ALARM	7/29/2014	Normal	7/29/2014	7/29/2014	961
	L210	END2 MCHRY S/W PUMP 2B FAULT	12:31:02 PM 970	12:31:04 PM 320	1:20:04 PM 100	TRIPPED	TRIPPED	7/29/2014	Normal	7/29/2014	7/29/2014	965
	L208	END2 SCR/BRG FW PUMP 2B FAULT	12:31:02 PM 970	12:31:04 PM 320	1:20:04 PM 100	TRIPPED	TRIPPED	7/29/2014	Normal	7/29/2014	7/29/2014	965
	M309	PM3 FAN 3B TRIP	12:31:02 PM 970	12:31:04 PM 320	1:20:04 PM 100	TRIPPED	TRIPPED	7/29/2014	Normal	7/29/2014	7/29/2014	965
	M409	PM4 FAN 4B TRIP	12:31:02 PM 970	12:31:04 PM 320	1:20:04 PM 100	TRIPPED	TRIPPED	7/29/2014	Normal	7/29/2014	7/29/2014	965
	Y013	ST GEAR 1- CONTROL PWR FAILURE - 1A	12:31:03 PM 070	12:31:13 PM 470		ALARM	ALARM	7/29/2014	Normal	7/29/2014		961
	Y014	ST GEAR 1- CONTROL PWR FAILURE - 1B	12:31:03 PM 070	12:31:12 PM 380	1:20:03 PM 760	ALARM	ALARM	7/29/2014	Normal	7/29/2014	7/29/2014	961
	Y011	ST GEAR 1- PWR FAILURE - 1A	12:31:03 PM 070	12:31:13 PM 020		ALARM	ALARM	7/29/2014	Normal	7/29/2014		961
	Y012	ST GEAR 1- PWR FAILURE - 1B	12:31:03 PM 070	12:31:11 PM 770	1:20:03 PM 760	ALARM	ALARM	7/29/2014	Normal	7/29/2014	7/29/2014	961
	Y023	ST GEAR 2 - CONTROL PWR FAILURE - 2A	12:31:03 PM 070	12:31:13 PM 470		ALARM	ALARM	7/29/2014	Normal	7/29/2014		961
	Y024	ST GEAR 2 - CONTROL PWR FAILURE - 2B	12:31:03 PM 070	12:31:11 PM 870	1:20:03 PM 760	ALARM	ALARM	7/29/2014	Normal	7/29/2014	7/29/2014	961
	Y021	ST GEAR 2 - PWR FAILURE - 2A	12:31:03 PM 070	12:31:13 PM 020		ALARM	ALARM	7/29/2014	Normal	7/29/2014		961
	Y022	ST GEAR 2 - PWR FAILURE - 2B	12:31:03 PM 070	12:31:11 PM 770	1:20:03 PM 760	ALARM	ALARM	7/29/2014	Normal	7/29/2014	7/29/2014	961
	L110	END1 MCHRY S/W PUMP 1B FAULT	12:31:03 PM 160	12:31:04 PM 470	1:20:04 PM 070	TRIPPED	TRIPPED	7/29/2014	Normal	7/29/2014	7/29/2014	965
	L108	END1 SCR/BRG FW PUMP 1B FAULT	12:31:03 PM 160	12:31:04 PM 470	1:20:04 PM 070	TRIPPED	TRIPPED	7/29/2014	Normal	7/29/2014	7/29/2014	965
	M109	PM1 FAN 1A TRIP	12:31:03 PM 160	12:31:04 PM 470	1:20:04 PM 070	TRIPPED	TRIPPED	7/29/2014	Normal	7/29/2014	7/29/2014	965
	M209	PM2 FAN 2A TRIP	12:31:03 PM 160	12:31:04 PM 470	1:20:04 PM 070	TRIPPED	TRIPPED	7/29/2014	Normal	7/29/2014	7/29/2014	965
	T212	PXFMR 2 MAIN CB TRIP	12:31:03 PM 420	12:31:05 PM 150		TRIPPED	TRIPPED	7/29/2014	TRIPPED	7/29/2014		965
	I113	PM1 24VDC CHARGER FAULT	12:31:03 PM 470	12:31:05 PM 010		ALARM	ALARM	7/29/2014	Normal	7/29/2014		961
	I213	PM2 24VDC CHARGER FAULT	12:31:03 PM 470	12:31:05 PM 010		ALARM	ALARM	7/29/2014	Normal	7/29/2014		961
	T110	EXFMR 1 MAIN CONTACTOR TRIP	12:31:03 PM 590	12:31:05 PM 230		TRIPPED	TRIPPED	7/29/2014	TRIPPED	7/29/2014		965
	T112	PXFMR 1 MAIN CB TRIP	12:31:03 PM 590	12:31:05 PM 230		TRIPPED	TRIPPED	7/29/2014	TRIPPED	7/29/2014		965
	P167	PM3 SYNCHR. VOLT. FAILED	12:31:03 PM 970	12:31:04 PM 290	1:20:04 PM 170	ALARM	ALARM	7/29/2014	Normal	7/29/2014	7/29/2014	961
	P168	PM4 SYNCHR. VOLT. FAILED	12:31:03 PM 970	12:31:04 PM 290	1:20:04 PM 170	ALARM	ALARM	7/29/2014	Normal	7/29/2014	7/29/2014	961
	P196	PM1 TRIP BY SIMADYN D	12:31:04 PM 660	12:31:05 PM 070		ALARM	ALARM	7/29/2014	Normal	7/29/2014		961
	P198	PM2 TRIP BY SIMADYN D	12:31:04 PM 660	12:31:05 PM 070		ALARM	ALARM	7/29/2014	Normal	7/29/2014		961
	I113	PM1 24VDC CHARGER FAULT	12:31:06 PM 770	12:31:12 PM 610		ALARM	ALARM	7/29/2014	Normal	7/29/2014		961
	I213	PM2 24VDC CHARGER FAULT	12:31:06 PM 770	12:31:12 PM 610		ALARM	ALARM	7/29/2014	Normal	7/29/2014		961

For Help, press F1

Page 1 Sec 1 1/1 At 6.1" In 1 Col 1 NUM

Start | Supervisor | Alarm Log | Untitled - E:\GE2001\b... | Bailda | Microsoft Word - Doc1... | Microsoft Word - Doc1.... | Microsoft Word - Doc2... | BaIFda 6.20.2 - M1 | 1055 Alarm | 11:37 AM

Alarm Log

File View Customize Actions Help

Active Alarms

S...	Alarm Point	Description	Start Time	End Time	Acknowledge Time	Alarm Status	Worst Value	End date	Current Value	Start Date	Acknowledge D...	Alar...
	P188	PM2 TRIP BY SIMADYN D	12:31:04 PM:660	12:31:05 PM:070		ALARM	ALARM	7/29/2014	Normal	7/29/2014		961
	I113	PH1 24VDC CHARGER FAULT	12:31:05 PM:770	12:31:12 PM:810		ALARM	ALARM	7/29/2014	Normal	7/29/2014		961
	I213	PH2 24VDC CHARGER FAULT	12:31:06 PM:770	12:31:12 PM:810		ALARM	ALARM	7/29/2014	Normal	7/29/2014		961
	I205	E GEN START BAT CURDIROF CUR	12:31:07 PM:900	12:31:08 PM:580	1:20:03 PM:620	H.W.ERROR	11	7/29/2014	2	7/29/2014	7/29/2014	2004
	I002	TEP BAT CUR & DIR OF CUR	12:31:09 PM:930	12:31:19 PM:910	1:19:36 PM:900	ALARM	-43	7/29/2014	0	7/29/2014	7/29/2014	2002
	E321	ME3 - LUBO PRESS	12:31:11 PM:340	12:31:16 PM:900	1:20:04 PM:290	ALARM	20	7/29/2014	0	7/29/2014	7/29/2014	2002
	I424	ME2 - HT/REC PMP MTR RPM	12:31:11 PM:910	12:31:12 PM:300		H.W.ERROR	0	7/29/2014	0	7/29/2014		2004
	E319	ME3 - TURBO OIL PRESS	12:31:12 PM:240	12:31:16 PM:570	1:20:03 PM:920	ALARM	20	7/29/2014	0	7/29/2014	7/29/2014	2002
	I415	ME1 - HT/REC PMP MTR AMP	12:31:12 PM:300	12:31:12 PM:710		H.W.ERROR	0	7/29/2014	0	7/29/2014		2004
	I414	ME1 - HT/REC PMP MTR RPM	12:31:12 PM:300	12:31:12 PM:710		H.W.ERROR	0	7/29/2014	0	7/29/2014		2004
	I425	ME2 - HT/REC PMP MTR AMP	12:31:12 PM:300	12:31:12 PM:710		H.W.ERROR	0	7/29/2014	0	7/29/2014		2004
	I445	ME4 - HT/REC PMP MTR AMP	12:31:12 PM:700	12:31:13 PM:100		H.W.ERROR	1	7/29/2014	1	7/29/2014		2004
	I444	ME4 - HT/REC PMP MTR RPM	12:31:12 PM:700	12:31:13 PM:100		H.W.ERROR	0	7/29/2014	0	7/29/2014		2004
	I435	ME3 - HT/REC PMP MTR AMP	12:31:13 PM:100	12:31:16 PM:970		H.W.ERROR	1	7/29/2014	1	7/29/2014		2004
	I434	ME3 - HT/REC PMP MTR RPM	12:31:13 PM:100	12:31:16 PM:970		H.W.ERROR	0	7/29/2014	0	7/29/2014		2004
	I415	ME1 - HT/REC PMP MTR AMP	12:31:13 PM:110	12:31:16 PM:200		H.W.ERROR	1	7/29/2014	0	7/29/2014		2004
	I414	ME1 - HT/REC PMP MTR RPM	12:31:13 PM:110	12:31:16 PM:200		H.W.ERROR	0	7/29/2014	0	7/29/2014		2004
	I425	ME2 - HT/REC PMP MTR AMP	12:31:13 PM:110	12:31:17 PM:010		H.W.ERROR	0	7/29/2014	0	7/29/2014		2004
	I424	ME2 - HT/REC PMP MTR RPM	12:31:13 PM:110	12:31:17 PM:010		H.W.ERROR	0	7/29/2014	0	7/29/2014		2004
	I001	TEP BAT V (120V)	12:31:13 PM:370	12:31:21 PM:210	1:20:03 PM:620	ALARM	116	7/29/2014	127	7/29/2014	7/29/2014	2002
	I445	ME4 - HT/REC PMP MTR AMP	12:31:13 PM:510	12:31:16 PM:110		H.W.ERROR	2	7/29/2014	1	7/29/2014		2004
	I444	ME4 - HT/REC PMP MTR RPM	12:31:13 PM:510	12:31:16 PM:110		H.W.ERROR	0	7/29/2014	0	7/29/2014		2004
	E305	ME3-DIESEL CTRL PNL SUM ALARM	12:31:14 PM:840	12:31:17 PM:020	1:20:03 PM:900	ALARM	ALARM	7/29/2014	Blocked	7/29/2014	7/29/2014	961
	Y013	ST GEAR 1 - CONTROL PWR FAILURE - 1A	12:31:20 PM:420	12:31:22 PM:510		ALARM	ALARM	7/29/2014	Normal	7/29/2014		961
	Y023	ST GEAR 2 - CONTROL PWR FAILURE - 2A	12:31:20 PM:420	12:33:26 PM:140		ALARM	ALARM	7/29/2014	Normal	7/29/2014		961
	I002	TEP BAT CUR & DIR OF CUR	12:31:21 PM:580	12:31:22 PM:660		H.W.ERROR	171	7/29/2014	0	7/29/2014		2004
	Y013	ST GEAR 1 - CONTROL PWR FAILURE - 1A	12:31:25 PM:040	12:31:27 PM:150		ALARM	ALARM	7/29/2014	Normal	7/29/2014		961
	Y013	ST GEAR 1 - CONTROL PWR FAILURE - 1A	12:31:30 PM:150	12:31:31 PM:570		ALARM	ALARM	7/29/2014	Normal	7/29/2014		961
	Y013	ST GEAR 1 - CONTROL PWR FAILURE - 1A	12:31:34 PM:450	12:31:35 PM:880		ALARM	ALARM	7/29/2014	Normal	7/29/2014		961
	Y013	ST GEAR 1 - CONTROL PWR FAILURE - 1A	12:31:38 PM:960	12:31:39 PM:780		ALARM	ALARM	7/29/2014	Normal	7/29/2014		961
	Y013	ST GEAR 1 - CONTROL PWR FAILURE - 1A	12:31:43 PM:050	12:31:43 PM:070		ALARM	ALARM	7/29/2014	Normal	7/29/2014		961
	Y013	ST GEAR 1 - CONTROL PWR FAILURE - 1A	12:31:46 PM:940	12:31:47 PM:560		ALARM	ALARM	7/29/2014	Normal	7/29/2014		961
	Y013	ST GEAR 1 - CONTROL PWR FAILURE - 1A	12:31:50 PM:770	12:31:50 PM:970		ALARM	ALARM	7/29/2014	Normal	7/29/2014		961
	Y013	ST GEAR 1 - CONTROL PWR FAILURE - 1A	12:31:54 PM:430	12:31:54 PM:840		ALARM	ALARM	7/29/2014	Normal	7/29/2014		961
	Y246	ST.GEAR 2 - FU STEERING FAILURE	12:32:27 PM:930	12:32:31 PM:010		ALARM	ALARM	7/29/2014	ALARM	7/29/2014		961
	Y146	ST GEAR 1 FU STEERING FAILURE	12:32:28 PM:080	12:32:31 PM:010		ALARM	ALARM	7/29/2014	ALARM	7/29/2014		961
	D242	END2 AIM 24V CHARGER FAULT	12:32:28 PM:360	12:32:44 PM:700		ALARM	ALARM	7/29/2014	Normal	7/29/2014		961
	I113	PH1 24VDC CHARGER FAULT	12:32:28 PM:430	12:32:30 PM:520		ALARM	ALARM	7/29/2014	Normal	7/29/2014		961
	I213	PH2 24VDC CHARGER FAULT	12:32:28 PM:430	12:32:30 PM:520		ALARM	ALARM	7/29/2014	Normal	7/29/2014		961
	D142	END1 AIM 24V CHARGER FAULT	12:32:28 PM:520	12:32:44 PM:010		ALARM	ALARM	7/29/2014	Normal	7/29/2014		961
	I008	TEP CHRG FAULT	12:32:28 PM:600	12:32:28 PM:550		ALARM	ALARM	7/29/2014	Normal	7/29/2014		961
	Y012	ST GEAR 1 - CONTROL PWR FAILURE - 1A	[illegible]	[illegible]		ALARM	ALARM	7/29/2014	Normal	7/29/2014		961

For Help, press F1

Page 1 Sec 1 1/1 At 6.1" Ln 1 Col 1

Start | Supervisor | Alarm Log | Untitled - E:\IGS2001 ... | iBapda | Microsoft Word - Do... | Microsoft Word - Do... | Microsoft Word - Do... | Microsoft Word - Do... | iBaPda 6.20.2 - M1 | IGSS Alarm | 11:38 AM

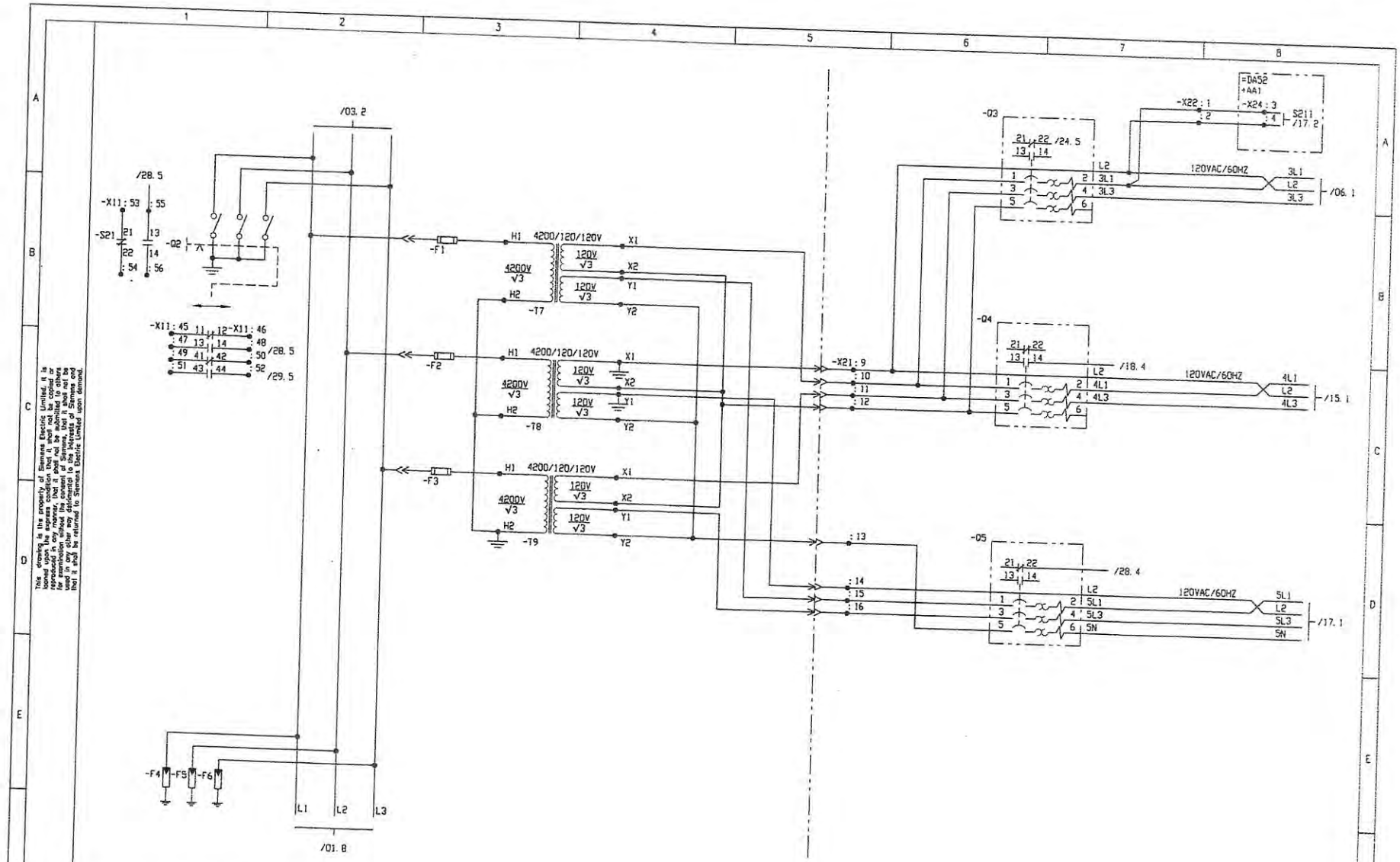

This drawing is the property of Siemens Electric Limited. It is loaned upon the express condition that it shall not be copied or reproduced in any manner, that it shall not be submitted to others for inspection without the consent of Siemens, that it shall not be used in any other way detrimental to the interests of Siemens and that it shall be returned to Siemens Electric Limited upon demand.

No.	Revision	Date	Name	
04	AS COMMISSIONED	30-OCT-97	TL	Date 16-AUG-94
03	ECO #019	10-NOV-95	TL	Drawn TL
02	ECO #007	28-SEP-94	TL	Chk'd MP
				Appr'd RF

WASHINGTON STATE FERRIES

JUMBO MARK II FERRY

Derived fr./Supercedes/Supers. by

Siemens

PROPULSION SWITCHBOARD 4. 16KV
GENERATOR No. 4
PT'S
SCHEMATIC DIAGRAM

AAV-4200

= DA4
+ AA4

(3)G62001-E0002-S241

Sheet 04
NS/Pg 05

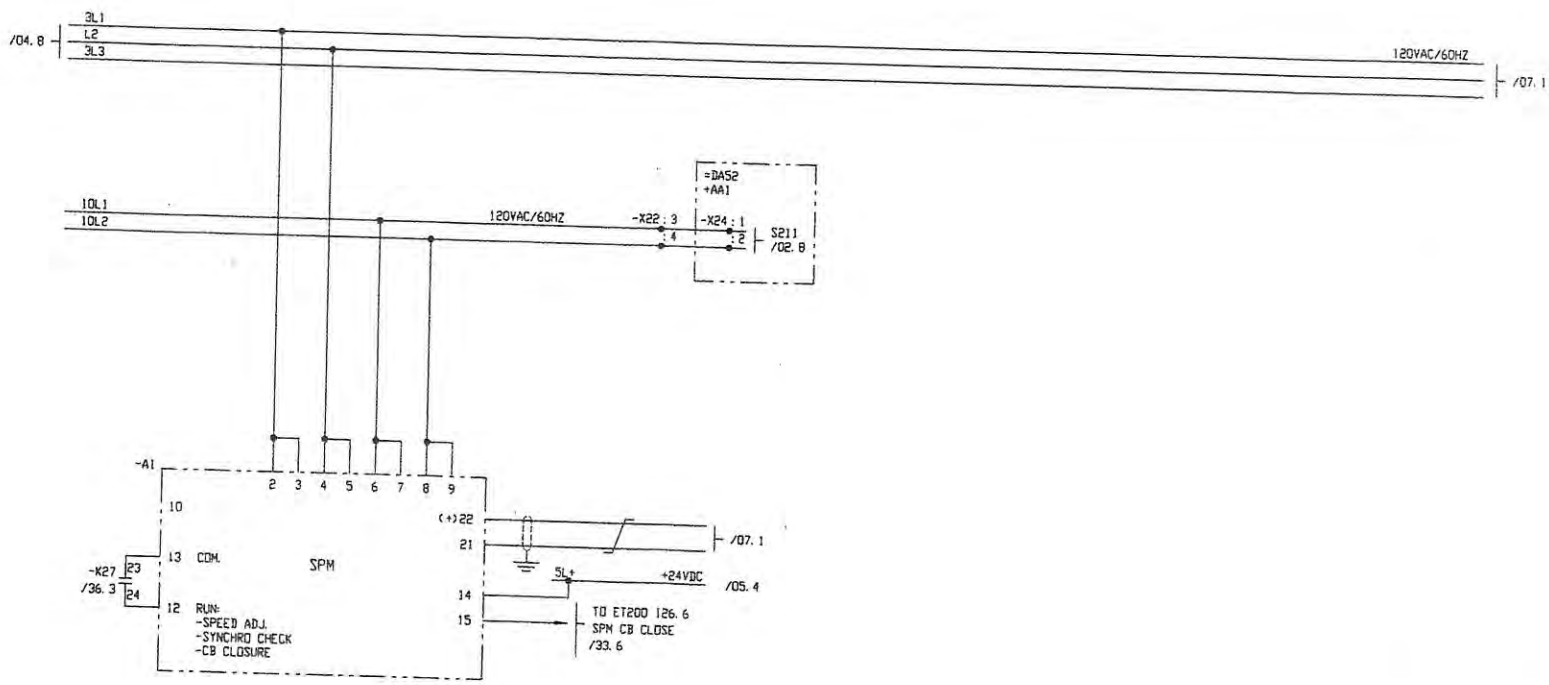

This drawing is the property of Siemens Electric Limited. It is loaned upon the express condition that it shall not be copied or reproduced in any manner, that it shall not be submitted to others for examination without the consent of Siemens, that it shall not be used in any other way detrimental to the interests of Siemens and that it shall be returned to Siemens Electric Limited upon demand.

No.	Revision	Date	Name	Appr'd	RF
04	AS COMMISSIONED	24-JUL-98	GO	Date	16-AUG-94
03	AS COMMISSIONED	30-OCT-97	TL	Drawn	TL
02	ECO #019	10-NOV-95	TL	Chk'd	MP

WASHINGTON STATE FERRIES

JUMBO MARK II FERRY

Derived fr./Supercedes/Supers. by

Siemens

PROPULSION SWITCHBOARD 4.16KV
GENERATOR No. 4
SYNCHRONIZING - SPM
SCHEMATIC DIAGRAM

AAW-4200

= DA4
+ AA4

(3)G62001-E0002-S241

Sheet 06
NS/Pg 07

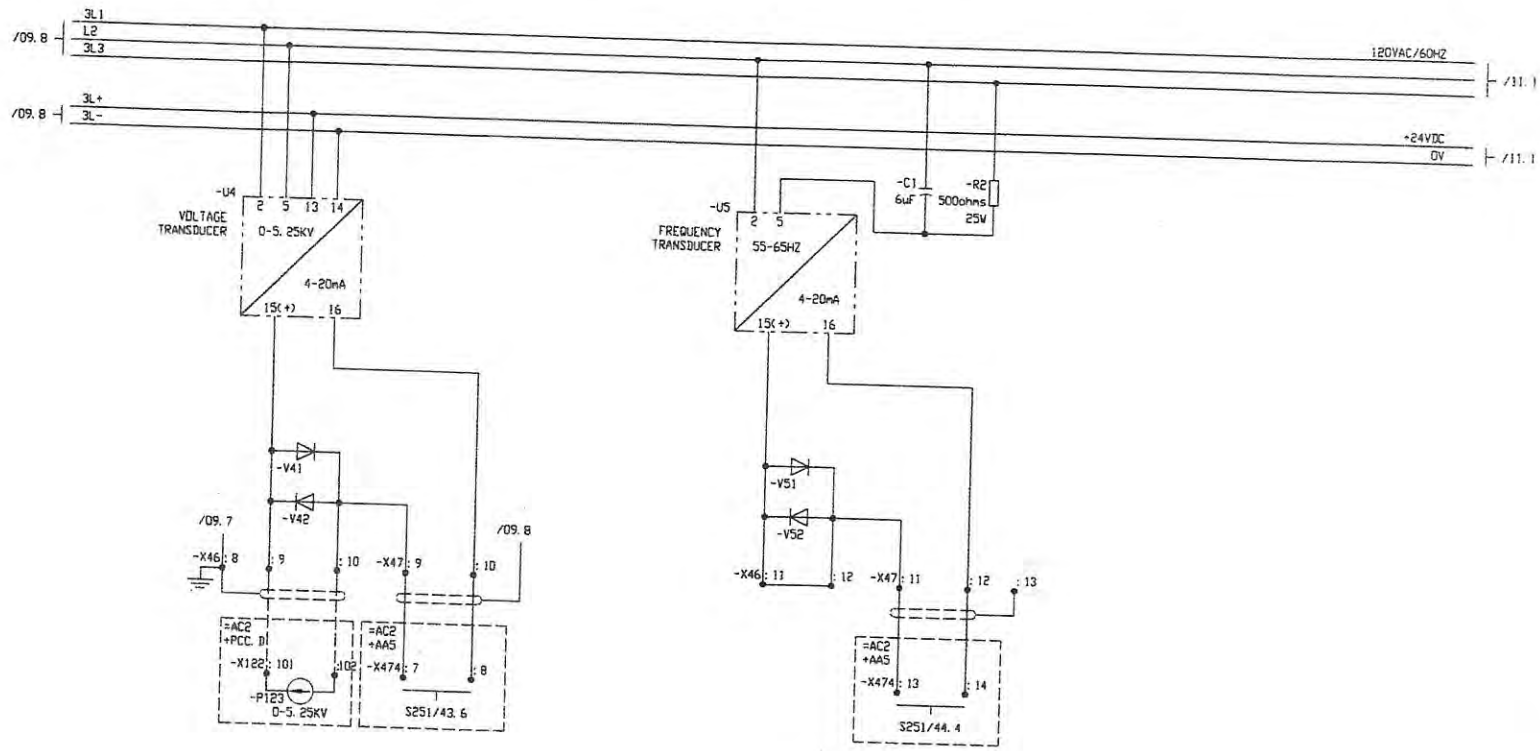

This drawing is the property of Siemens Electric Limited. It is loaned subject to express condition that it shall not be copied or reproduced in whole or in part, nor shall its subject matter be disclosed to others for examination without the consent of Siemens, that it is used only for the purpose for which it is loaned, and that it shall be returned to Siemens Electric Limited upon demand.

No.	Revision	Date	Name		
06	FINAL MODIFICATIONS	MAR-1999	DP	Date	16-AUG-94
05	AS COMMISSIONED	30-OCT-97	TL	Drawn	TL
04	ECO #019	10-NOV-95	TL	Chk'd	MP
				Appr'd	RF

WASHINGTON STATE FERRIES

JUMBO MARK II FERRY

Derived fr./Supercedes/Supers. by

Siemens

PROPULSION SWITCHBOARD 4. 16KV
GENERATOR No. 4
VOLTAGE & FREQUENCY TRANSDUCERS
SCHEMATIC DIAGRAM

AAW-4200

= DA4
+ AA4

(3) G62001-E0002-S241

Sheet 10
NS/Pg 11

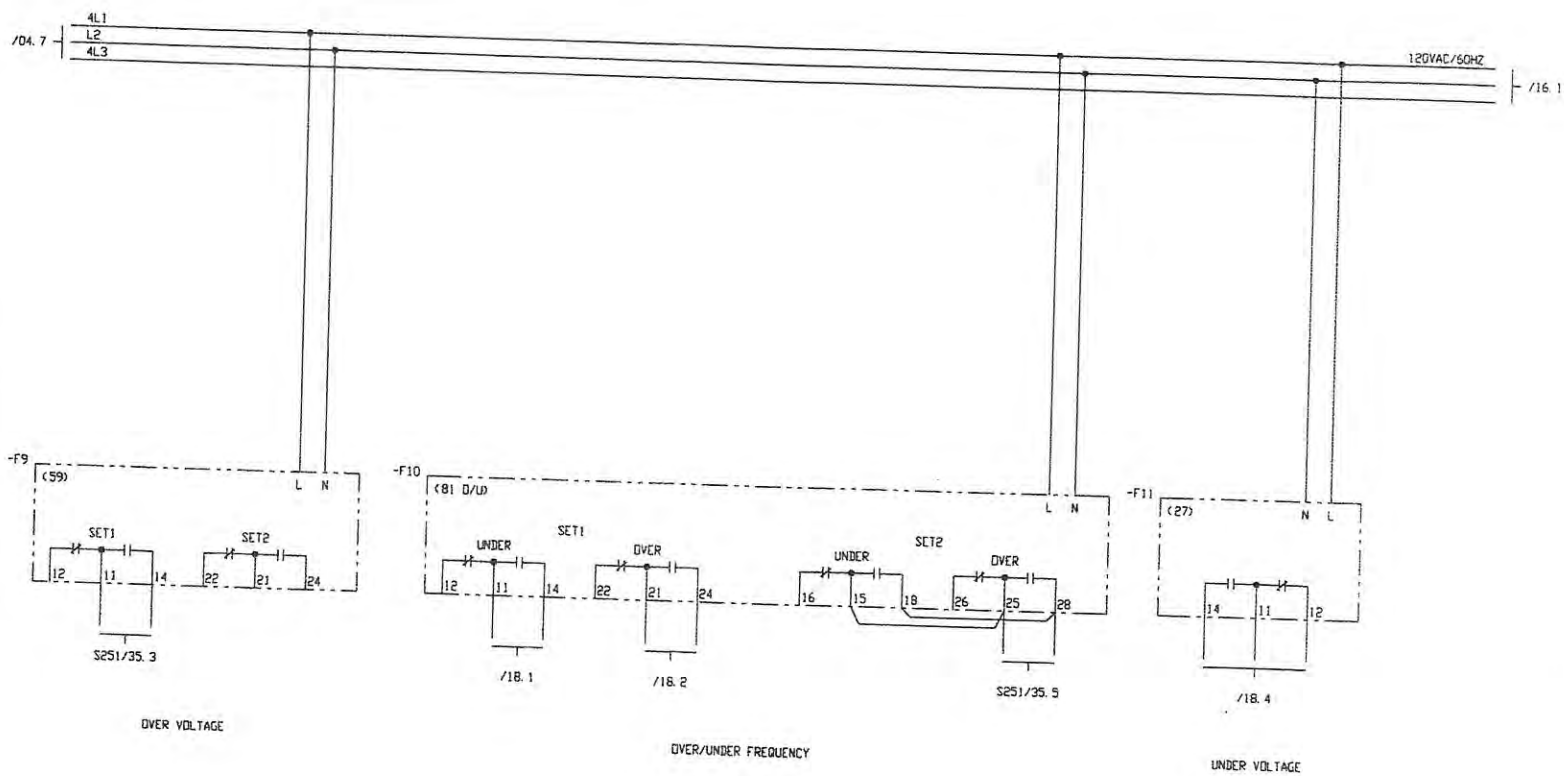

This drawing is the property of Siemens Electric Limited. It is loaned upon the express condition that it shall not be copied or reproduced in whole or in part, nor that it shall be submitted to others for examination without the consent of Siemens, nor shall it be used in any other way detrimental to the interests of Siemens and that it shall be returned to Siemens Electric Limited upon demand.

No.	Revision	Date	Name		
04	AS COMMISSIONED	30-OCT-97	TL	Date	16-AUG-94
03	ECO #019	10-NOV-95	TL	Drawn	TL
02	ECO #018	28-SEP-94	TL	Chk'd	MP
				Appr'd	RF

WASHINGTON STATE FERRIES

JUMBO MARK II FERRY

Derived fr./Supercedes/Supers. by

Siemens

PROPULSION SWITCHBOARD 4. 16KV
GENERATOR No. 4
PROTECTION
SCHEMATIC DIAGRAM

AAW-4200

= DA4
+ AA4

(3) G62001-E0002-S241

Sheet 15
NS/Pg 16

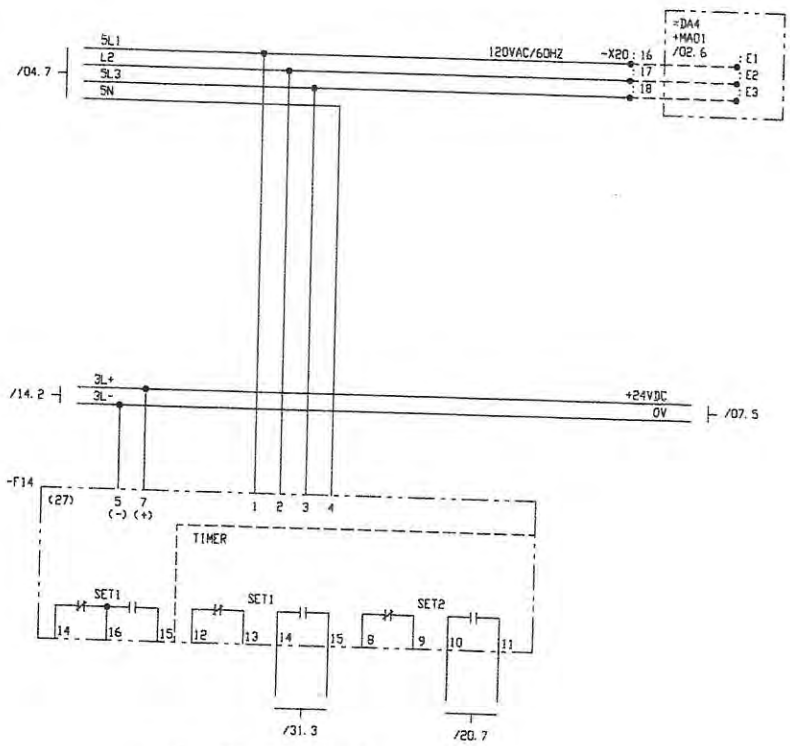

UNDER VOLTAGE - PHASE LOSS (3PH)

This drawing is the property of Siemens Electric Limited. It is loaned upon the express condition that it shall not be copied or reproduced in any manner, that it shall not be submitted to others for examination without the consent of Siemens, that it shall not be used in any other way detrimental to the interests of Siemens and that it shall be returned to Siemens Electric Limited upon demand.

No.	Revision	Date	Name		
07	AS COMMISSIONED	24-JUL-98	GD	Date	16-AUG-94
06	AS COMMISSIONED	30-OCT-97	TL	Drawn	TL
05	ECO #019	10-NOV-95	TL	Chk'd	MP
				Appr'd	RF

WASHINGTON STATE FERRIES

JUMBO MARK II FERRY

Derived fr./Supercedes/Supers. by

Siemens

PROPULSION SWITCHBOARD 4.16KV
GENERATOR No. 4
PROTECTION
SCHEMATIC DIAGRAM

AAW-4200

= DA4
+ AA4

(3) G62001-E0002-S241

Sheet 17
NS/Pg 18

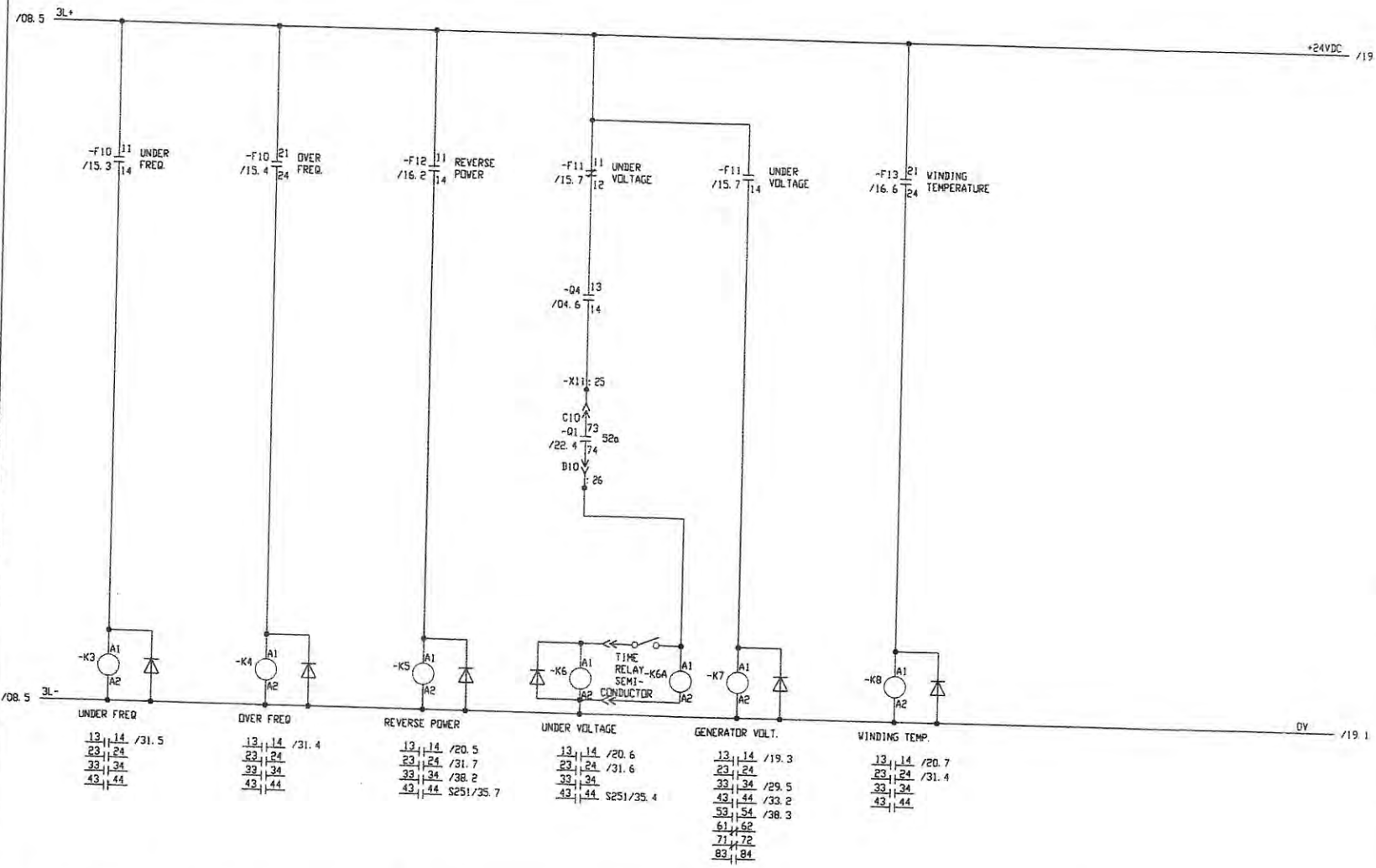

This drawing is the property of Siemens Electric Limited. It is loaned upon the express condition that it shall not be copied or reproduced in any manner, that it shall not be submitted to others for examination without the consent of Siemens, that it shall not be used in any other way detrimental to the interests of Siemens and that it shall be returned to Siemens Electric Limited upon demand.

No.	Revision	Date	Name	Appr'd	RF
03	AS COMMISSIONED	30-OCT-97	TL	Date	16-AUG-94
02	ECO #019	10-NOV-95	TL	Drawn	TL
01	ECO #001	28-SEP-94	TL	Chk'd	MP

WASHINGTON STATE FERRIES

JUMBO MARK II FERRY

Derived fr./Supercedes/Supers. by

Siemens

PROPULSION SWITCHBOARD 4.16KV
GENERATOR No. 4
PROTECTION
SCHEMATIC DIAGRAM

AAW-4200

= DA4
+ AA4

(3) G62001-E0002-S241

Sheet 18
NS/Pg 19

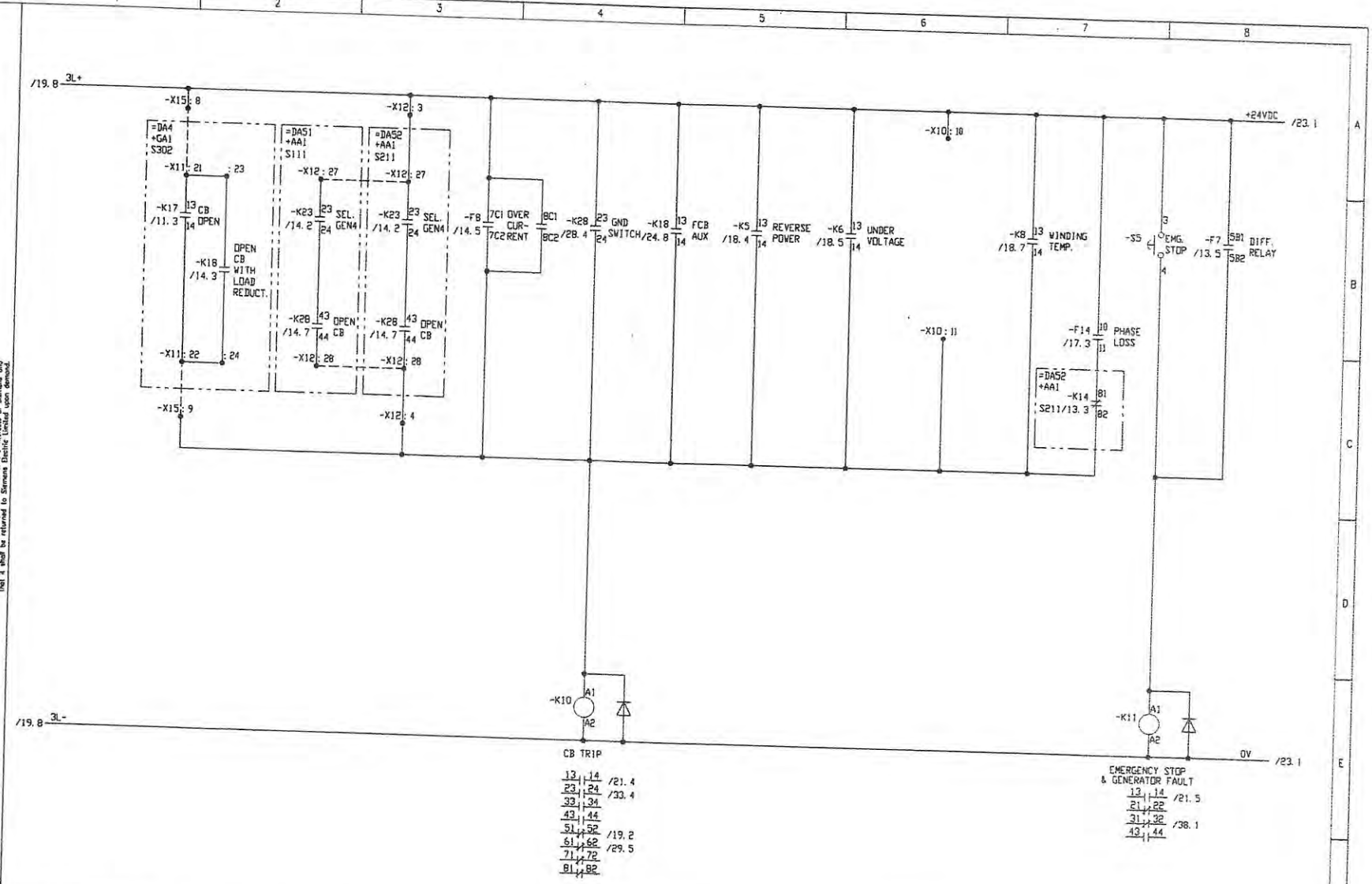

This drawing is the property of Siemens Electric Limited. It is loaned upon the express condition that it shall not be copied or reproduced in any manner, that it shall not be submitted to others for examination without the consent of Siemens, that it shall not be used in any other way detrimental to the interests of Siemens and that it shall be returned to Siemens Electric Limited upon demand.

No.	Revision	Date	Name	Appr'd	RF
08	AS COMMISSIONED	24-JUL-98	GO	Date	16-AUG-94
07	AS COMMISSIONED	30-OCT-97	TL	Drawn	TL
06	ECO #020	26-JUL-96	GO	Chk'd	MP

WASHINGTON STATE FERRIES

JUMBO MARK II FERRY

Derived fr./Supercedes/Supers. by

Siemens

PROPULSION SWITCHBOARD 4.16KV
GENERATOR NO. 4
CIRCUIT BREAKER TRIP CTRL CIRC.
SCHEMATIC DIAGRAM

AAW-4200

= DA4
+ AA4

(3) G62001-E0002-S241

Sheet 20
NS/Pg 21

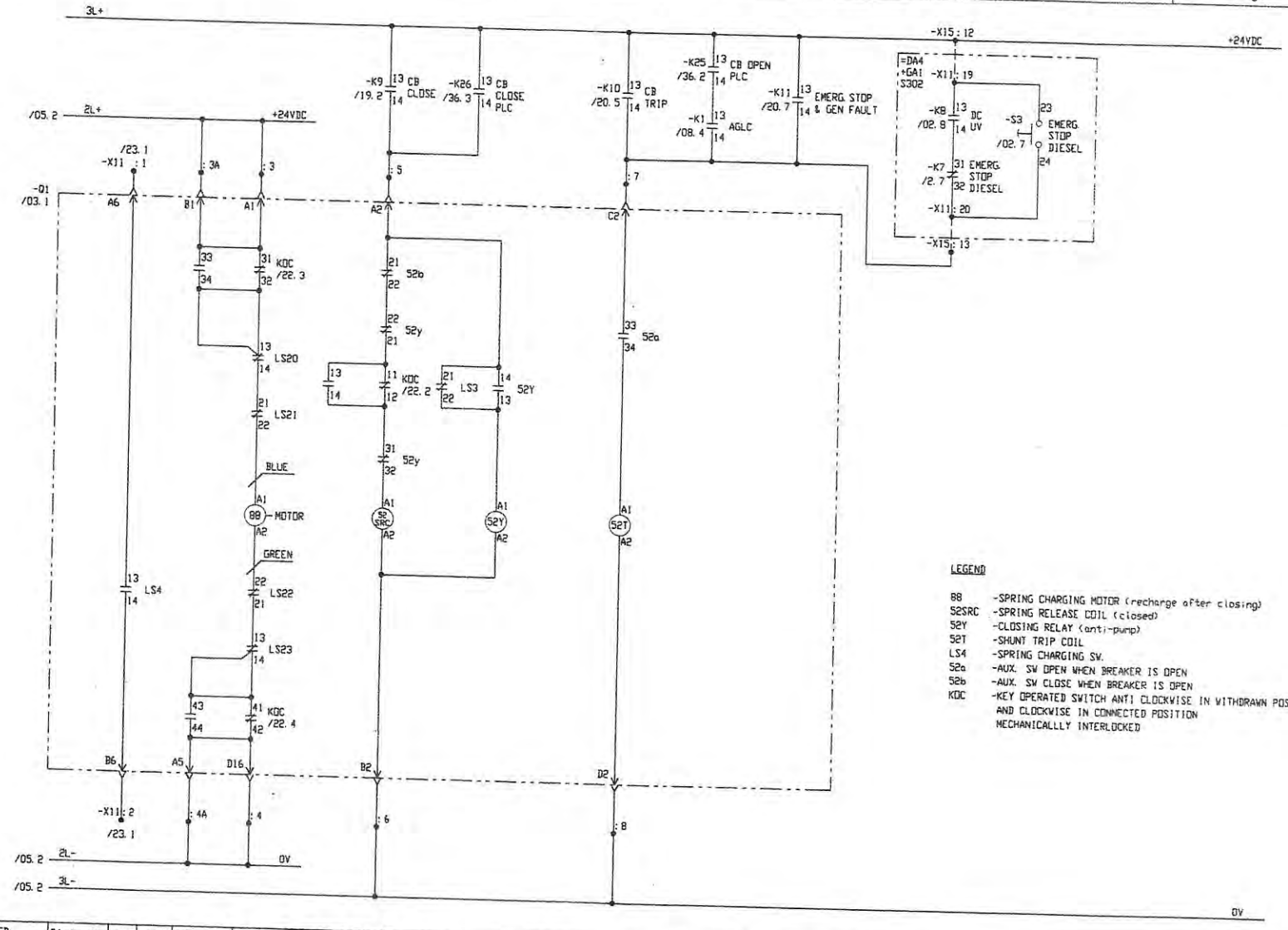

LEGEND

88	-SPRING CHARGING MOTOR (recharge after closing)
52SRC	-SPRING RELEASE COIL (closed)
52Y	-CLOSING RELAY (anti-pump)
52T	-SHUNT TRIP COIL
LS4	-SPRING CHARGING SW.
52a	-AUX. SW OPEN WHEN BREAKER IS OPEN
52b	-AUX. SW CLOSE WHEN BREAKER IS OPEN
KOC	-KEY OPERATED SWITCH ANTI CLOCKWISE IN WITHDRAWN POSITION AND CLOCKWISE IN CONNECTED POSITION MECHANICALLLY INTERLOCKED

This drawing is the property of Siemens Electric Limited. It is loaned upon the express condition that it shall not be copied or reproduced in any manner, that it shall not be submitted to others for examination without the consent of Siemens, that it shall not be used in any other way detrimental to the interests of Siemens and that it shall be returned to Siemens Electric Limited upon demand.

No.	Revision	Date	Name	Appr'd	RF
05	AS COMMISSIONED	24-JUL-98	GO	Date	16-AUG-94
04	AS COMMISSIONED	30-OCT-97	TL	Drawn	TL
03	ECO #019	10-NOV-95	TL	Chk'd	MP

WASHINGTON STATE FERRIES

JUMBO MARK II FERRY

Derived fr./Supercedes/Supers. by

Siemens

PROPULSION SWITCHBOARD 4. 16KV
GENERATOR No. 4
CIRCUIT BREAKER CONTROL CIRCUIT
SCHEMATIC DIAGRAM

AAW-4200

= DA4
+ AA4

(3)G62001-E0002-S241

Sheet 21
NS/Pg 22

Protective Relays

Diff 5UT5125-2CA00-0B/JH

O/C 7SJ5115-2CA00-0A/FF

Gen-4

DIFF

LED-1

5200 LAST

FAULT # 752

5200 LAST

0 PICK-UP DIFF

5200 LAST

11 FAULT ID>

5200 LAST

1010 TRIP L123

5200 LAST

IDIFF.> 368%

5200 LAST

1789 DROP-DIFF

O/C

LED 2 3 4

FAULT

001 04/13/72

SYS FAULT:C

002 04:06:26,048

FAULT: C

003 0 MS

FAULT L12: C

004 17MS

FAULT L123:C

005 32 MS

FAULT L123E:C

006 39 MS

FAULT L123:C

007 56 MS

FAULT L123E:C

008 87MS

FAULT L123:C

009 1740 MS

FAULT L12 :C

010 1748 MS

DEV. DROP-OFF :C

GEN-3

DIFF

LED-1

FAULT 327

0 PICK-UP DIFF

4 FAULT ID>

1004 TRIP L123

I DIFF> 672%

2073 DROP-DIFF

O/C

LED 1 2 3

001 12/28/70

SYS FAULT :C

002 22:52:15,367

FAULT:C

003 0 MS

FAULT L13:C

004 18 MS

FAULT L12 :C

005 25MS

FAULT L1:C

006 39 MS

DEV. DROP-OFF :C

Megger WSF

7-31-2014 5kV 5 min.

Generator-3 8 Gohm

Cable 1 Tohm

Generator-4 10 Gohm

Cable 1 Tohm

PT-Measurement Gen-1

PT-Fuses pulled, variable voltage injected at X-1 and X-2 at Phase-2

Applied Voltage X-1 to X-2	F11 „Under-Voltage" Phase – Phase	F14 „Phase-Loss" Phase- Neutral	A1 Synchronizer Phase – Phase	U4 V-Transducer Phase – Phase	Conneted Devices
47 V	7.55 V	48.6 V 46.8 V 48.2 V	7.55 V	7.55 V	F14+AVR+Q +Q4
47 V	28.7 V	20.6 V 47.4 V 34.3 V	28.7 V	28.7 V	F14+Q3+Q4
47 V		0 V 47.2 V 0 V			Only F14
		Phase-Phase			
47 V		7.67 V 6.95 V 0.73 V			F14+AVR+Q3+Q4

P.T.'s Bench-Test

Gen-4: H-L > 400 Gohm

H+L - G > 60 Gohm

L – H+G >1000 Gohm

Gen-3: H-L >80 Mohm

H+L-G > 80 Mohm

L-H+G > 1 Gohm

Ratio-Test: All 35 : 1

Impedance/Saturation:

Secondary Voltage:	30 V	0.029 A	1,34 kOhm
	60 V	0,052 A	1,15 kOhm
	120 V	0.181 A	0,66 kOhm

Manufacturer, Model and Settings of relevant Protective Relays:

Under-Voltage, F11: Basler BE4-27

80% 96 V

6 sec via K6A

Phase-Loss, F14: Siemens 7TU9914-1EA0/AB

42 V

6 sec

Synchronizer A1: Woodsward SPM-A 9905-01

No Voltage-Matching

SIEMENS

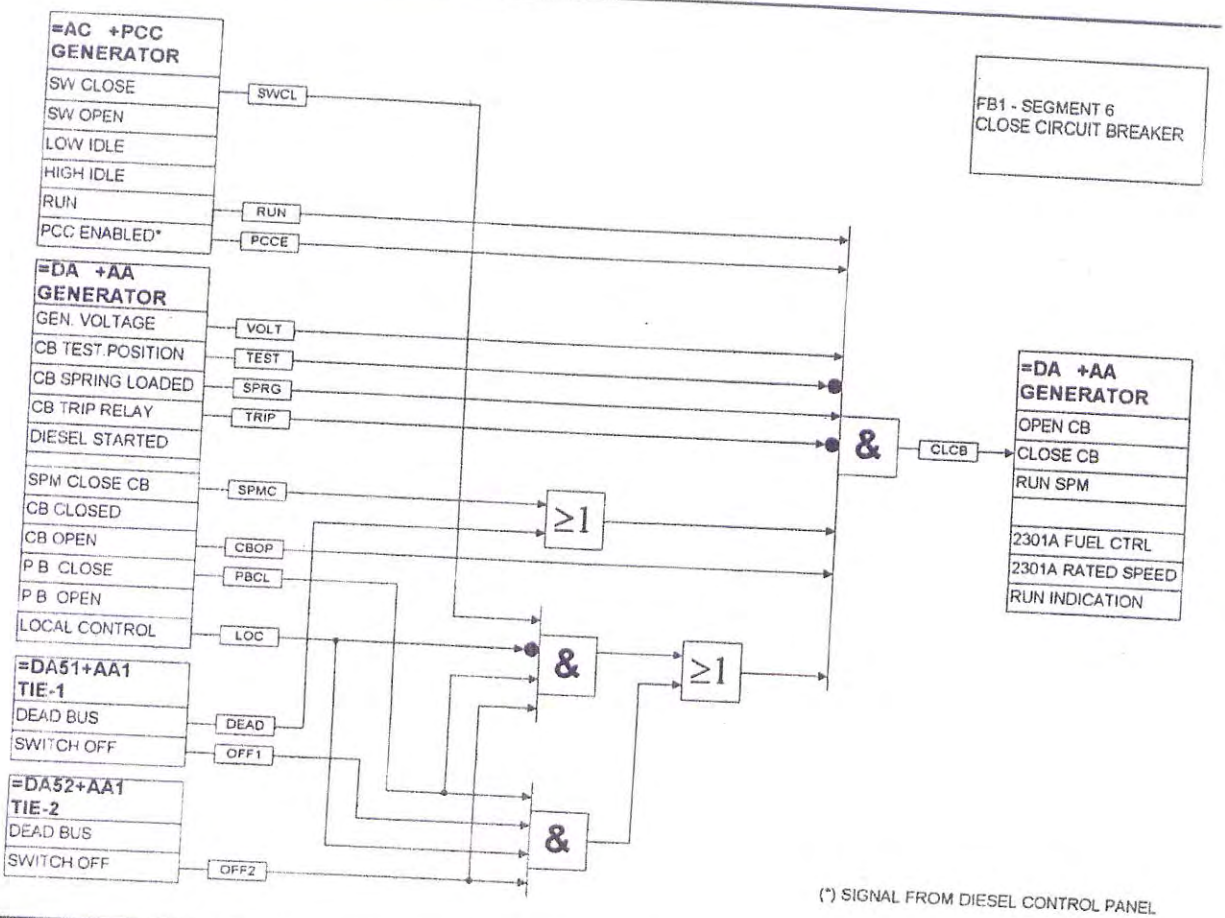
=AC +PCC
GENERATOR
SW CLOSE
SW OPEN
LOW IDLE
HIGH IDLE
RUN
PCC ENABLED*
SWCL
RUN
PCCE
=DA +AA
GENERATOR
GEN. VOLTAGE
CB TEST POSITION
CB SPRING LOADED
CB TRIP RELAY
DIESEL STARTED
SPM CLOSE CB
CB CLOSED
CB OPEN
P B CLOSE
P B OPEN
LOCAL CONTROL
VOLT
TEST
SPRG
TRIP
SPMC
CBOP
PBCL
LOC
=DA51+AA1
TIE-1
DEAD BUS
SWITCH OFF
DEAD
OFF1
=DA52+AA1
TIE-2
DEAD BUS
SWITCH OFF
OFF2
≥1
&
≥1
&
&
CLCB
FB1 - SEGMENT 6
CLOSE CIRCUIT BREAKER
=DA +AA
GENERATOR
OPEN CB
CLOSE CB
RUN SPM
2301A FUEL CTRL
2301A RATED SPEED
RUN INDICATION
(*) SIGNAL FROM DIESEL CONTROL PANEL