Precast, Prestress Bridge Girder Design Example

PGSuper Training

WSDOT Bridge and Structures Office

Title	Precast, prestressed bridge girder design example – PGSuper Training	**Publication No.**	

Abstract
This document is a detailed design example of a 165 ft long, WF74G precast-prestressed concrete bridge girder. The example illustrates design, analysis, and load rating of a typical exterior girder in a horizontally curved structure. The primary design elements include alignment and bridge geometrics, loads and load distribution, flexure design for optimized fabrication, shear design, deflections and camber, slab haunch build-up, lateral stability during initial lifting of the girder from the casting bed and hauling the girder from the fabrication facility to the bridge site, treatment of prestress losses, load rating, reinforced elastomeric bearing design. This example is intended to illustrate the calculations performed by the BridgeLink::PGSuper computer program, and the BridgeLink::BEToolbox::BrgCalc application

Notes

Author	Richard Brice, PE	**Sponsor**	WSDOT
Specification	AASHTO LRFD Bridge Design Specifications, 9th Edition, 2020 WSDOT Bridge Design Manual (M 23-50.21), June 2022		

Original Publication Date	10/18/2018	**Date of Latest Revision**	9/17/2024	**Version**	3.5

Table of Contents

List of Figures

Revisions

Date	Version	Name	Revision
10/8/2018	1.0	Brice	Original example
03/09/2022	2.0	Brice	Updated calculations of capacity reduction factor for flexure
03/18/2022	3.0	Brice	Changed bridge configuration and girder type so design includes temporary top strands for shipping.
06/02/2022	3.1	Brice	Evaluation of total reinforcement strain from moment capacity analysis did not include the initial strain. The calculation is updated to show the total strain is the sum of the net tensile strain and the initial strain.
10/19/2022	3.2	Brice	Editorial and format revisions
07/09/2024	3.3	Brice Boutilier	Updated beam stress calculations per PCI BDM 4th Edition General revisions and improvements. Added new section of bearing pad design
08/07/2024	3.4	Boutilier	General revisions to bearing pad analysis
09/17/2024	3.5	Brice	Updated lifting with temporary top strand calculations

1 Introduction

The purpose of this document is to illustrate how the PGSuper computer program performs its computations. PGSuper is a computer program for the design, analysis, and load rating of precast, prestressed concrete girder bridges.

A design example followed by a load rating analysis, and an elastomeric bearing design illustrates the engineering computations performed by PGSuper. PGSuper uses a state-of-the-art iterative design algorithm and other iterative computational procedures. Only the final iterative steps are of interest. To avoid lengthy iterations in this document, trial variables are "guessed" based on the final iterations produced by the software.

PGSuper uses 16 decimals of precision. There will be minor differences between these "hand" calculations and numbers reported by PGSuper. When noted, these calculations adopt numeric values reported by PGSuper.

1.1 Sign Convention

This document and PGSuper use the following sign convention.

Item	Value
Compression	< 0
Tension	> 0
Upward Deflection	> 0
Downward Deflection	< 0
Top Section Modulus	< 0
Bottom Section Modulus	> 0
Strand Eccentricity above Centroid	< 0
Strand Eccentricity below Centroid	> 0

2 Bridge Description

2.1 Site Conditions

Normal Exposure

Average Ambient Relative Humidity: 75%

2.2 Roadway

Alignment

PI Station	Back Tangent	Delta	Radius
10+00	N 34° 45' 32" W	12° 34' 15" R	6000 ft

Profile

PVI Station	PVI Elevation	Grade in (g_1)	Grade out (g_2)	Length
9+00	100.00	-2%	-1.5%	600 ft

Superelevations

Left	Right
$0.04\frac{\text{ft}}{\text{ft}}$	$-0.04\frac{\text{ft}}{\text{ft}}$

2.3 Bridge Layout

Back of Pavement Seat, Abutment 1, 7+00

Back of Pavement Seat, Abutment 2, 8+65

Abutments are oriented at S 58° 41′ 13.47" W

Abutment 1, Skew Angle 0°

Abutment 2, Skew Angle 1° 34′ 32.28" L

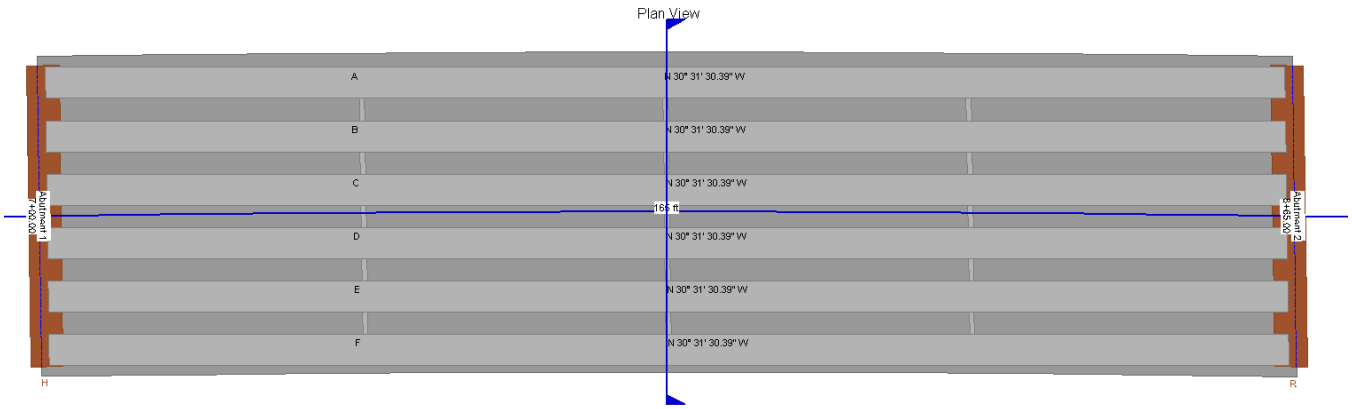

Figure 2-1: Bridge Plan

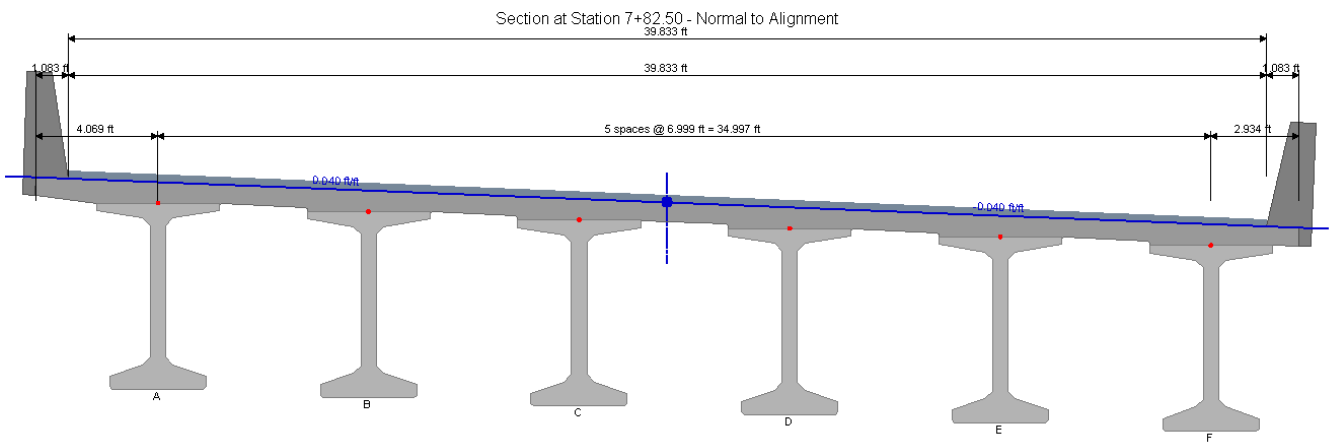

Figure 2-2: Bridge Section at Station 7+82.50

Girders

6 WF74G @ 7'-0"
measured radial at BPS

$A = 923.531\ in^2$
$I_x = 734356.0\ in^4$
$I_y = 72018.4\ in^4$
$Y_t = 38.343$ in
$Y_b = 35.657$ in
$S_t = 19152.5\ in^3$
$S_b = 20594.8\ in^3$
Perimeter = 289.284 in

$W_{tf} = 49.0$ in
$W_{bf} = 38.375$ in
$t_{web} = 6.125$ in

f'_{ci} = to be determined

f'_c = to be determined

$w_c = 155\ lb/ft^3$
$w_c = 165\ lb/ft^3$ (including rebar)

Prestressing = to be determined

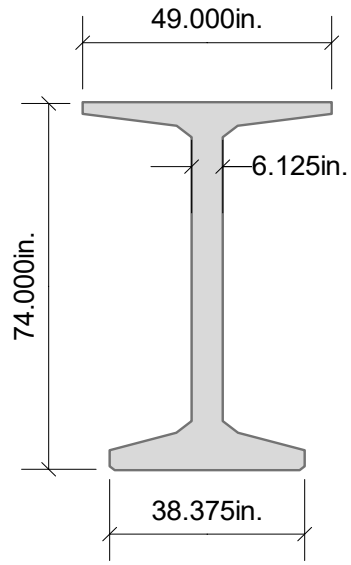

Figure 2-3: Girder Dimensions

Harping points at 0.4L from the end of the girder.

Interior Diaphragms

Rectangular – Between girders only. H = 62.875 in, T = 8.00 in. Located at $0.25L_s$, $0.50L_s$ and $0.75L_s$.

Slab

Gross Depth = 7.5 in
Overhang Edge Depth = 7.0 in
Overhang = Varies
Edge Offset = 21'-0"
Overall width = 42'-0"
Slab Offset ("A" Dimension) = To be determined
Fillet = ¾"
Sacrificial Depth = ½"
$f'_c = 4$ ksi
$w_c = 150\ lb/ft^3$
$w_c = 155\ lb/ft^3$ (including rebar)
Future Wearing Surface, $0.035\ k/ft^2$

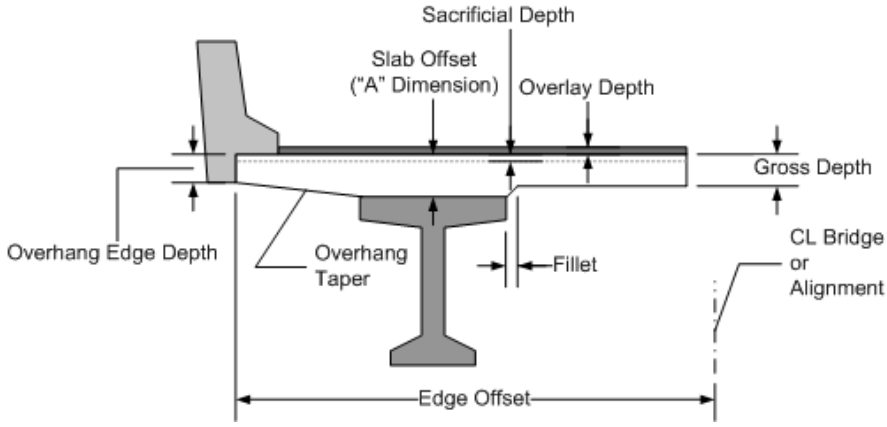

Figure 2-4: Slab Detail

Strands

0.6” Diameter	f_{pu} = 270.0 ksi
Grade 270	f_{py} = 243.0 ksi
Low Relaxation	E_{ps} = 28500 ksi
	a_{ps} = 0.217 in^2/per strand

Traffic Barrier

42” Single Slope

Design weight = 0.690 kip/ft/barrier

Load is distributed to 3 exterior girders

Load Modifiers

Ductility	Redundancy	Importance
η_D = 1.0	η_R = 1.0	η_I = 1.0

Criteria

Design in accordance with the AASHTO LRFD Bridge Design Specification, Ninth Edition, 2020 and the WSDOT Bridge Design Manual

Load Rate in accordance with AASHTO, The Manual for Bridge Evaluation, Third Edition, 2018 with 2020 interim revisions and the WSDOT Bridge Design Manual

---

WSDOT policy is to design using gross section properties (BDM 5.6.2.I) using refined estimate of prestress losses (BDM 5.4.1.C) and elastic gains. PGSuper supports stress analysis with transformed section properties, the LRFD approximate method for estimating prestress losses, and a non-linear time-step analysis.

---

3 Design Preliminaries

The framing of this bridge results in girders that are all the same length. The left exterior girder (Girder A) has the largest overhang at mid-span. Design and load rate Girder A.

3.1 Construction Sequence

Figure 3-1 shows the assumed construction sequence. PGSuper models the various construction stages with Construction Events.

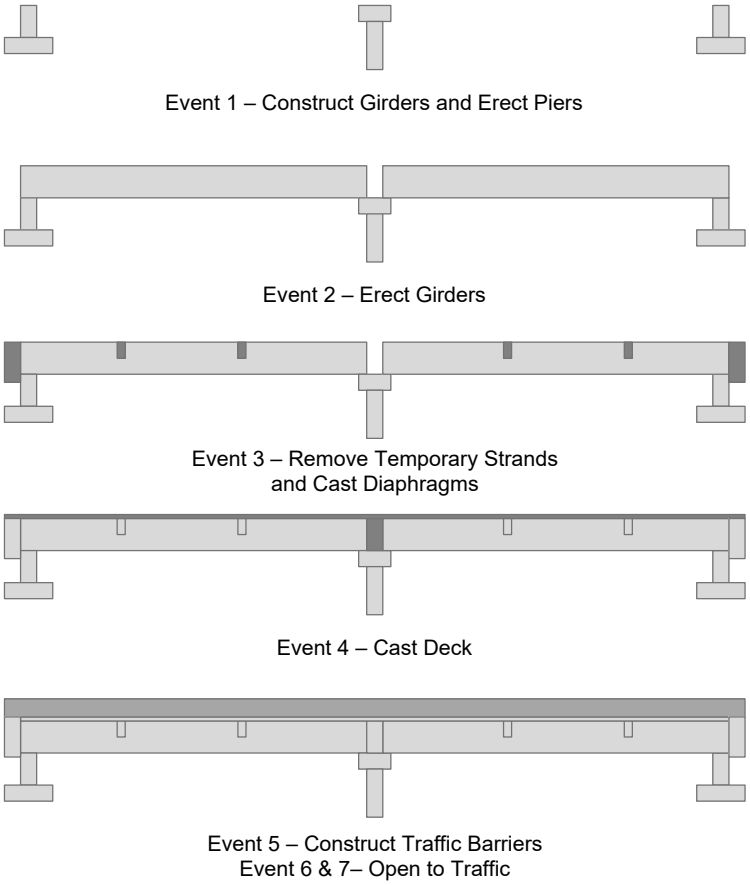

Figure 3-1 Assumed Construction Sequence

3.2 Girder Length

For a typical stub abutment with a Type A connection, the centerline of bearing is located 2'-8.5" from, and measured normal to, the back of pavement seat (BPS). The distance from the centerline bearing to the end of the girder is 1'-8.5" measured normal to the CL Bearing, which is parallel to the back of pavement seat.

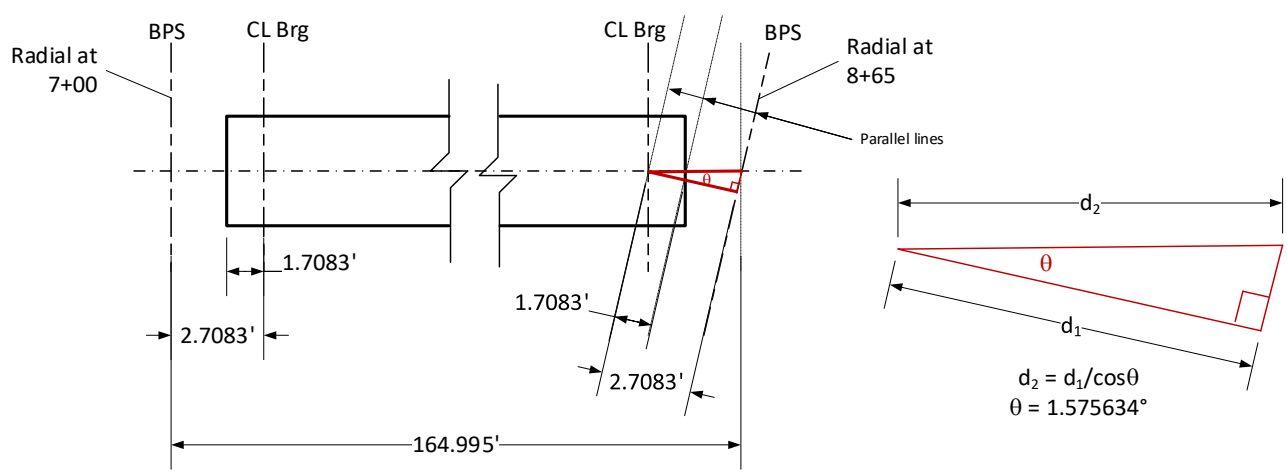

Figure 3-2 Connection Geometry

The BPS-to-BPS distance of 165 ft is measured along the arc of the horizontal curve. The angle subtended by the girder is $\delta = \frac{L_c}{R}\frac{180}{\pi} = \frac{165}{6000}\frac{180}{\pi} = 1.575634°$. The chord length of the girder is $2R\,sin\frac{\delta}{2} = 2(6000)\,sin\frac{1.575634}{2} = 164.995\,ft$.

The bearing-to-bearing span length is $L_s = 164.995ft - 2.7083ft - (2.7083ft)/cos\,(1.575634) = 159.578ft$.

The overall girder length is $L_g = 159.577ft + 1.7083ft + (1.7083ft)/cos\,(1.575634) = 162.995ft$.

3.3 Section Properties

Compute the composite section properties. The basic (non-composite) girder section properties are given in the bridge description.

3.3.1 Effective Flange Width

The effective flange width of a composite concrete deck slab is the tributary width of the member (LRFD 4.6.2.6.1). LRFD C4.6.2.6.1 states "These provisions are considered applicable for skew angles less than or equal to 75 degrees, L/S greater than or equal to 2.0 and overhang widths less than or equal to 0.5S". The maximum overhang is approximately 4 ft which exceeds S/2 = 3.5ft. For this reason, the overhang portion of the effective flange width is taken to be equal to S/2.

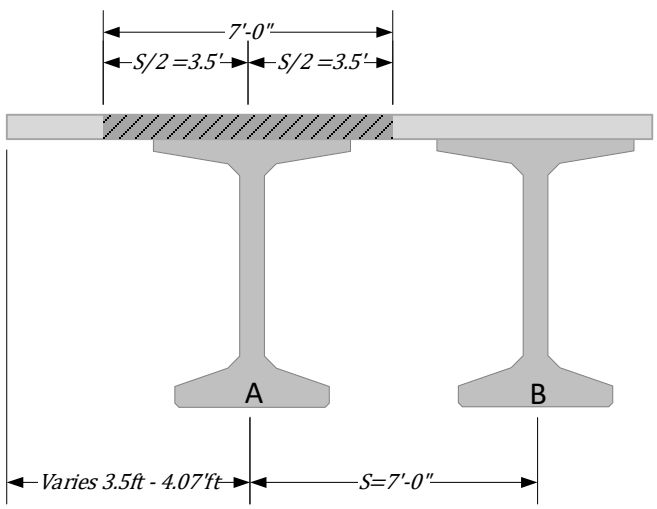

Figure 3-3 Effective Flange Width

The effective flange width is measured perpendicular to the centerline of the girder.

$$w_{eff} = (3.5ft + 3.5ft)\left(\frac{12in}{1ft}\right)cos1.575634 = 83.9in$$

3.3.2 Composite Girder Properties

Transform the slab to equivalent girder material and use the parallel axis theorem to compute the composite girder properties. At mid-span the bottom of the slab is above the top of the girder by the fillet amount (¾"). If the actual camber exceeds the predicted camber, the ¾" fillet can be easily lost. Assume the bottom of the slab is directly on top of the girder. This provides the least stiff section where the maximum demand occurs. For simplicity, use this section model at all locations (BDM 5.6.2.B.1).

PGSuper has options to include the haunch depth in the section properties calculations. Each section can use the minimum haunch depth (fillet dimension) or the actual haunch depth. Using the actual

haunch depth means there is a different set of section properties at every cross section. Using more precise section properties may be desirable for load rating.

Modulus of elasticity of slab concrete

$$E_c = 120{,}000K_1 w_c^2 f_c'^{0.33} = (120{,}000)(1.0)(0.150)^2(4.0)^{0.33} = 4266.223\ ksi$$

Modulus of elasticity of girder concrete assuming a concrete strength of $f_c' = 8.7ksi$

$$E_c = 120{,}000K_1 w_c^2 f_c'^{0.33} = (120{,}000)(1.0)(0.155)^2(8.7)^{0.33} = 5886.891\ ksi$$

The overall controlling 28-day design concrete strength is 8.7 ksi after multiple design iterations and refinements. See Section 4.6.2.

$$n = \frac{E_{c\ slab}}{E_{c\ girder}} = \frac{4266.223ksi}{5886.891ksi} = 0.725$$

The sacrificial wearing surface is not part of the structural section. Use the structural slab depth for computing section properties.

$$t_{slab} = t_{gross\ slab\ depth} - t_{sacrifical\ depth} = 7.5in - 0.5in = 7.0in$$

	Area	Y_b	*(Area)(Y_b)*
Slab	$(0.725)(83.9in)(7.0in) = 425.793in^2$	$74.0in + \frac{7.0in}{2} = 77.5in$	$32998.958in^3$
Girder	$923.531in^2$	$35.657in$	$32930.345in^3$
Total	$A_c = 1349.324in^2$		$65929.303in^3$

$$Y_{bc} = \frac{\sum(Area)(Y_b)}{\sum(Area)} = \frac{65929.303in^3}{1349.324in^2} = 48.861in$$

$$Y_{tc\ girder} = H_g - Y_{bc} = 74.0in - 48.861in = 25.139in$$

	Area	*d*	*(Area)(d^2)*	I_o	I_o + *(Area)(d^2)*
Slab	$425.793in^2$	$74.0in + \frac{7.0in}{2} - 48.861in = 28.639in$	$349207.761in^4$	$\frac{1}{12}(0.725)(83.9in)(7.0in) = 1738.653in^4$	$350946.414in^4$
Girder	$923.531in^2$	$35.657in - 48.861in = -13.204in$	$161013.58in^4$	$734356.0in^4$	$895369.58in^4$
					$I_x = 1246315.994in^4$

$$S_{bc} = -\frac{I_x}{Y_{bc}} = -\frac{1246315.994in^4}{48.861in} = -25507.378in^3$$

$$S_{tc\ girder} = \frac{I_x}{Y_{tc\ girder}} = \frac{1246315.994in^4}{25.113in} = 49628.319in^3$$

3.3.3 First Moment of Area of deck slab,

$$Q_{slab} = A_{slab}\left(Y_{tc\ girder} + \frac{t_{slab}}{2}\right) = 425.793in^2\left(25.113in + \frac{7in}{2}\right) = 12183.2125n^3$$

3.3.4 Section Property Summary

Below are the section properties from PGSuper. They are slightly different then the properties computed above. Use the section properties reported by PGSuper for better agreement between these calculations and the software.

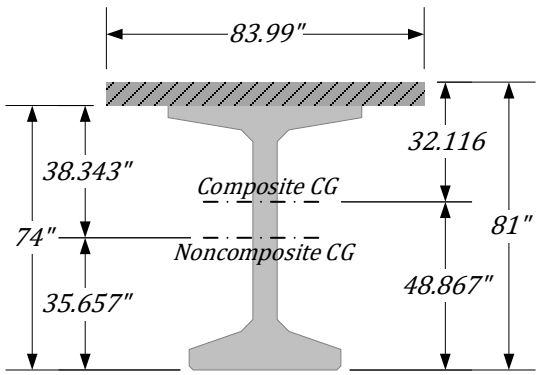

Figure 3-4 Centroid of Non-composte and Composite Section

Table 3-1: Section Properties from PGSuper

	Girder	*Composite Girder*
Area, **A**	923.531 in^2	1349.614 in^2
I_x	734356.0 in^4	1246570.6in^4
I_y	72018.4 in^4	-
$Y_{top\ girder}$	38.343 in	25.113 in
$Y_{top\ slab}$	-	32.116 in
Y_b	35.657 in	48.867 in
$S_{top\ girder}$	$-19152.5\ in^3$	$-49599.7\ in^3$
$S_{top\ slab}$	-	$-53531.9\ in^3$
S_b	20594.8 in^3	25509.3 in^3
Q_{slab}	-	12199.9 in^3
Effective Flange Width, W_{eff}	-	83.992 in
Perimeter	289.284 in	-

3.4 Structural Analysis

There are several significant stages during the life of a prestressed girder. PGSuper automatically models these stages as Construction Events. The events, and the related construction activities, are:

1) Fabricate girders
   a) Tension strands, place reinforcement, form girders, cast concrete, concrete curing. Initial relaxation of the prestressing strand occurs.
   b) Strip forms and impart the precompression force into the girder (aka Release)
   c) Move girders into storage area (Initial lifting)
   d) Elapsed time during storage (creep, shrinkage, and relaxation losses occur)
2) Erect girders
   a) Prior to erection, the girders must be transported from the fabrication facility to the bridge site
   b) Erect and brace girders
   c) De-tension temporary strands (if applicable)
3) Cast diaphragms and deck (dead load is applied to non-composite girder section)
4) Install railing system (traffic barriers, sidewalks, etc.) (dead load is applied to composite section)
5) Final without Live Load (includes future overlay if applicable)
6) Final with Live Load

PGSuper models the individual steps within a Construction Event with Analysis Intervals. For example, Event 1 – Construct Girders, models five analysis intervals: Tension Strands and Cast Concrete, Elapsed Time during Curing, Prestress Release, Lifting, Placement into Storage, and Elapsed Time during Storage.

The analysis intervals are a general modelling approach associated with time-step analysis. Precast girder design normally uses a 2-step time-step analysis. However, PGSuper can perform a refined non-linear time-step analysis. PGSplice uses the non-linear time-step analysis as well.

3.4.1 Girder Fabrication

Girder fabrication consists of tensioning strands, placing mild reinforcement, installing girder forms, and placing concrete. Stripping of girder forms occurs after the concrete reaches adequate strength to accommodate the stresses and stability of the girder. The strands are then detensioned but because of bond with the girder concrete, the tension force is transferred into the girder concrete, compressing it. If the prestress force is eccentric to the centroid of the girder and it is sufficient to overcome the self-weight of the girder, the girder cambers upwards. In this condition, the girder bears on its ends and bending stresses develop.

$$w_{girder} = w_c A_g = (0.165kcf)(923.531in^2)\left(\frac{1ft^2}{144in^2}\right) = 1.058\ klf$$

where:

A_g = Gross cross-sectional area of the girder

w_c = Unit weight of concrete

$$M_g = \frac{wx}{2}(l - x)$$

Moment at point of prestress transfer

Prestress transfer occurs over 60 strand diameters (LRFD 5.9.4.3.1)

$$l_t = 60d_b = (60)(0.6in) = 36in = 3ft$$

$$M_g = \frac{(1.058klf)(3ft)}{2}(162.995ft - 3ft) = 253.912\ k \cdot ft$$

Moment at harp point (HP)

Harp point is 0.4L from the end of the girder $(0.4)(162.995ft) = 65.198ft$

$$M_g = \frac{(1.058klf)(65.198ft)}{2}(162.995ft - 65.198ft) = 3372.99k \cdot ft$$

Moment at mid-span (0.5L)

$$M_g = \frac{(1.058klf)\left(\frac{162.995ft}{2}\right)}{2}\left(162.995ft - \frac{162.995ft}{2}\right) = 3513.534k \cdot ft$$

3.4.2 Erected Girder

Substructure elements support the girder at permanent bearing locations once erected. Bracing stabilizes the girder. Temporary top strands are detensioned, followed by diaphragm and roadway slab casting. Installation of the railing system occurs after the roadway slab gains adequate strength.

3.4.2.1 *Diaphragm and Deck Placement*

In this stage, the girder supports its self-weight along with the weight of the diaphragms and slab.

3.4.2.1.1 Diaphragm Loads

The diaphragm load for an interior girder is $P = HWw_c(S - t_{web})$, where:

H = Height of interior diaphragm

W = Width of interior diaphragm

t_{web} = Width of girder web

S = Spacing of girders

$$P = HWw_c(S - t_{web}) = (62.875in)(8in)(0.155kcf)\frac{(83.99in - 6.125in)}{2}\left(\frac{1ft^3}{1728in^3}\right) = 1.76\ kip$$

Diaphragms are located at $39.894ft$ $(0.25L)$, $79.789ft$ $(0.5L)$ and $119.683\ ft$ $(0.75L)$ from the left bearing.

3.4.2.1.2 Slab Loads

The slab load consists of the main slab and the slab haunch.

The slab overhang varies along the length of the girder. Also, the thickness of the slab varies from 7" at the edge of deck to 7.5" at the edge of the girder top flange. The basic loading of the main slab is $w_{slab} = w_c W_{trib} t_{slab}$ for interior beams and $w_{slab} = w_c\left[t_{slab}\left(\frac{S+W_{tf}}{2}\right) + \left(W_{overhang} - \frac{W_{tf}}{2}\right)\frac{(t_{edge}+A)}{2}\right]$ for exterior beams.

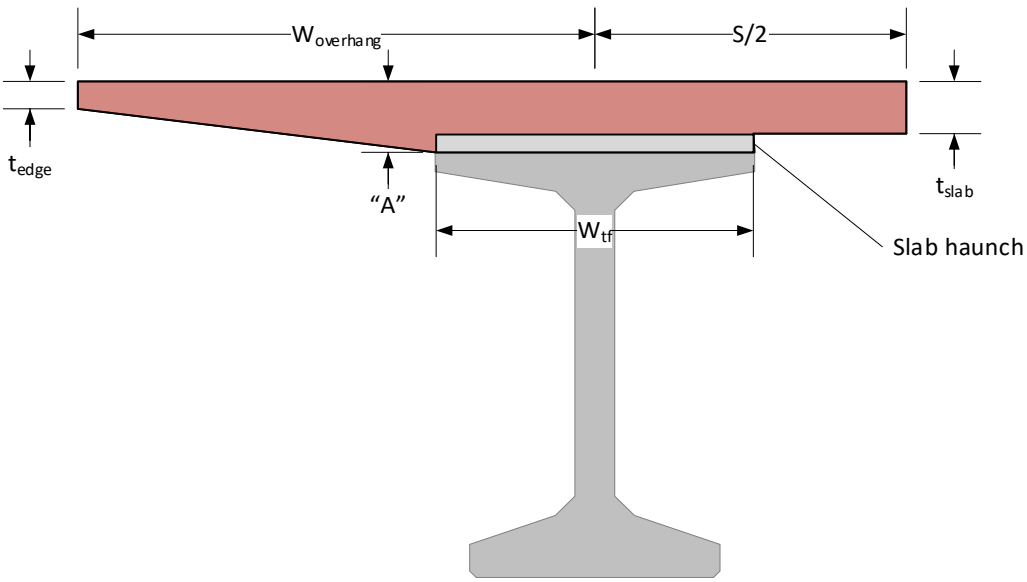

Figure 3-5 Main slab section for slab loading

$W_{overhang}$ varies along the length of the span.

Assume a slab offset ("A" dimension) of 12.5in. This assumption will be verified in Section 6.5.

The main slab weight computed by PGSuper is:

Location (ft)	$W_{overhang}$ (in)	Main Slab weight (klf)
0.000	42.440	0.725
15.958	44.732	0.747
31.916	46.518	0.764
47.873	47.795	0.775
63.831	48.564	0.782
79.789	48.826	0.785
95.747	48.580	0.782
111.704	47.826	0.776
127.662	46.564	0.764
143.620	44.794	0.748
159.578	42.516	0.726

3.4.2.1.2.1 Slab Haunch Load

The slab haunch load accounts for the buildup of concrete between the top of the girder and the bottom of the main slab. This concrete element has a width equal to the top flange width (W_{tf}) and varies in depth along the length of the girder because of camber and variations in the roadway surface.

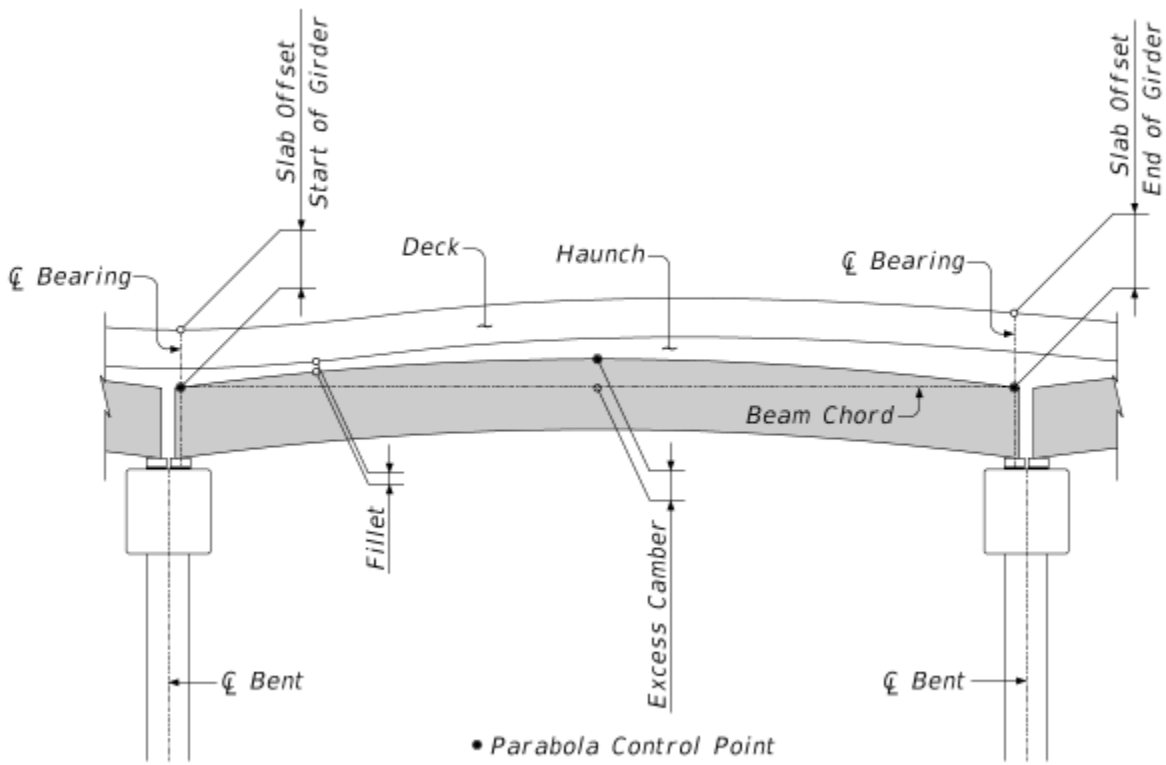

Figure 3-6: Slab Haunch

WSDOT's design policy is to assume the top of the girder is flat (no camber) for purposes of determining the slab haunch load (BDM 5.6.2.D.3.iv).

PGSuper provides the option to consider excess camber when determining loading. This option may be desirable for load rating as it reduces the haunch dead load.

The basic haunch dead load at any given section is

$$w_{haunch} = W_{tf} t_{haunch} w_c$$

Assuming a slab offset ("A" dimension) of 12.5in, the slab haunch load at the start of the span is

$$t_{haunch} = A - t_{slab} = 12.5in - 7.5in = 5.0in$$

$$w_{haunch} = (49in)(5in)(0.155kcf)\left(\frac{1ft^2}{144in^2}\right) = 0.264\ klf$$

The vertical curve causes the haunch depth to vary along the length of the girder. The table below lists the haunch loading for half the span. This load is modeled as linear load segments.

Location	t_{haunch} (in)	w_{haunch} (klf)
0.0L	5.0	0.264
0.1L	4.795	0.253
0.2L	4.635	0.244

0.3L	4.524	0.238
0.4L	4.453	0.235
0.5L	4.430	0.234

3.4.2.2 *Superimposed Dead Loads*

Application of superimposed dead loads occurs after the deck has reached adequate strength. The superimposed dead loads consist of the traffic barrier and the overlay if present. The composite section is resisting these loads.

3.4.2.2.1 Traffic Barrier

The traffic barrier weight is distributed over *n* exterior girders, if there are 2*n* or more girders, otherwise the weight of the traffic barrier per girders is $w_{tb} = \frac{W_{tb\,left} + W_{tb\,right}}{N}$, where N is the number of girders in the span. From BDM 5.6.2.B.2.d, $n = 3$.

$$2n = 6, N = 7, 2n < N$$

$$w_{tb} = \frac{W_{tb}}{n} = \frac{0.690klf}{3\ girders} = 0.230\frac{klf}{girder}$$

AASHTO permits equal distribution for barrier loads to all girders.

3.4.2.3 *Open to Traffic*

3.4.2.3.1 Future Overlay

Evenly distribute the weight of the future wearing surface to all girders. The curb-to-curb width of the deck is 39.833ft.

$$w_o = \frac{(39.833ft)(0.035ksf)}{7\ girder} = 0.232\frac{klf}{girder}$$

Take care when applying the future overlay loading. Certain stress conditions are worse before the overlay is applied and others are worse after it is applied.

3.4.2.3.2 Live Load

The design live load is the HL93 notional model defined in the AASHTO LRFD BDS.

The vehicular live loading is the combination of the:

- design truck or design tandem (LRFD 3.6.1.1)
- design lane load (LRFD 3.6.1.2.1)

The design truck consists of three axles. Axle weights and spacing are, 8.0 kip, 14.0 ft, 32.0 kip, 14.0 to 30.0 ft, 32.0 kip. See Figure 3-6 below.

The design tandem consists of a pair of 25.0 kip axles spaced 4.0 ft apart.

The design lane load is 0.640 klf, uniformly distributed along the length of the span.

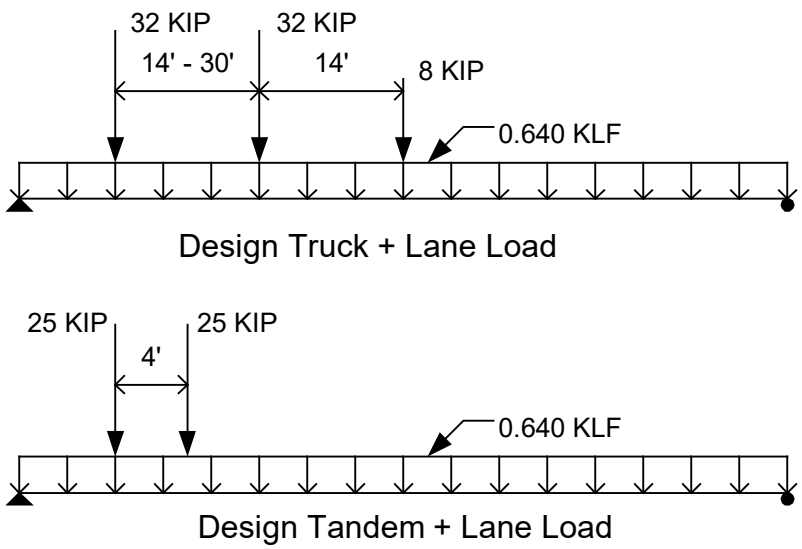

Figure 3-7: HL93 Live Load Model

Apply a dynamic load allowance (impact) of 33% to the design truck and design tandem portions of the live load response.

The fatigue live load is the design truck with the rear axle spacing fixed at 30 ft. The dynamic load allowance for fatigue is 15%.

3.4.3 Analysis Results Summary

The following load responses are computed by PGSuper.

3.4.3.1 *At Release*

Loading	Transfer Point	Harp Point	Mid-Span
Girder	253.96 k · ft	3373.66 k · ft	3514.22 k · ft

3.4.3.2 *At Bridge Site*

Loading	$0.5L_s$
Girder after erection	3368.43 k · ft
Diaphragm	140.14 k · ft
Slab	2465.61 k · ft
Haunch	760.28 k · ft
Traffic Barrier	732.12 k · ft
Future Overlay	739.63 k · ft
*Design LLIM (HL-93)	5485.09 k · ft
*Fatigue LLIM	2686.86 k · ft

*Live load moments are per lane

3.4.4 Limit State Responses

Group the structural responses into load cases and compute limit state responses. The total factored load, or limit state response, is $Q = \sum \eta_i \gamma_i q_i$. (LRFD Eqn. 3.4.1-1)

LRFD Table 3.4.1-1 gives the load factors. The limit states of importance are:

- Service I, Q = 1.0DC + 1.0DW + 1.0(LL+IM)
- Service III, Q = 1.0DC + 1.0DW + 0.8(LL+IM)
- Strength I, Q = 1.25DC + 1.50DW + 1.75(LL+IM)
- Fatigue I, Q = 0.5DC + 0.5DW + 1.5(LL+IM)

WSDOT specifies the live load factor for Service III is 0.8 for design and 1.0 for load rating. See BDM 3.5.2

3.4.5 Live Load Distribution Factors

Compute the live load distribution factors. Select the appropriate cross section type from LRFD Table 4.6.2.2.1-1. A precast I-beam with cast-in-place concrete deck corresponds to cross section k.

WSDOT deviates from the AASHTO LRFD BDS for exterior girders in type k sections as described in BDM 3.9.3.A.

Compute the longitudinal stiffness parameter K_g.

$$K_g = n\left(I + Ae_g^2\right)$$

where:

n	=	modular ratio between beam and deck material $n = \frac{E_{beam}}{E_{slab}}$
I	=	moment of inertia of the beam (in^4)
A	=	area of beam (in^2)
e_g	=	distance between the centers of gravity of the basic beam and deck (in)

$$n = \frac{5886.9891ksi}{4266.223ksi} = 1.380$$

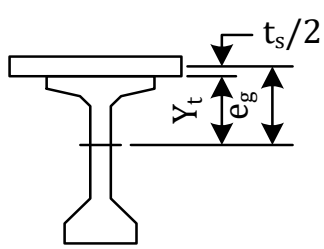

Figure 3-8: e_g Detail

$$e_g = Y_t + \frac{t_s}{2} = 38.343in + \frac{7.0in}{2} = 41.843in$$

$$K_g = 1.380[734356.0in^4 + (923.531in^2)(41.843in)^2] = 3244494.4in^4$$

3.4.5.1 *Number of Design Lanes*

The number of design lanes is equal to the integer portion of the roadway width divided by 12 ft (LRFD 3.6.1.1.1).

$$N_L = \left\lfloor \frac{39.833ft}{12ft} \right\rfloor = 3\ Design\ Lanes$$

3.4.5.2 *Distribution of Live Loads per Lane for Moments in Exterior Beams*

LRFD Table 4.6.2.2.2d-1 gives the live load distribution factors for moments in exterior beams. For two or more loaded lanes the exterior beam distribution factor is a function of the interior beam distribution factor. The interior beam distribution factor is given in LRFD Table 4.6.2.2.2b-1.

3.4.5.2.1 Compute Distribution Factor for Moment

Check the range of applicability for live load distribution factors.

Range Variable	Value	Status
$3.5\ ft \le S \le 16\ ft$	$S = 7.0\ ft$	**OK**
$4.5\ in \le t_s \le 12\ in$	$t_s = 7.0\ in$	**OK**
$20\ ft \le L \le 240\ ft$	$L = 162.995\ ft$	**OK**
$N_b \ge 4$	$N_b = 6$	**OK**
$10{,}000in^4 \le K_g \le 7{,}000{,}000\ in^4$	$K_g = 2288376\ in^4$	**OK**
$-1.0 \le d_e \le 5.5$	$d_e = 2.855ft$	**OK**

3.4.5.2.1.1 One Design Lane Loaded

The live load distribution factor for one loaded lane is computed by the lever rule.

$$gM_1^e = (mpf)\frac{\frac{P}{2}\sum d_i}{(S)(P)}$$

Where mpf is the multiple presence factor, P is the axle load, d_i is the distance from the exterior girder to the wheel load, and S is the girder spacing.

Per the WSDOT BDM 3.9.3A, when the slab cantilever length exceeds 40% of the adjacent interior girder spacing a multiple presence factor of 1.0 is used in conjunction with the lever rule for computing the live load distribution for a single loaded lane.

AASHTO LRFD BDS 3.6.1.1.2 specifies a multiple presence factor of 1.2 for one loaded lane.

$$gM_1^e = 1.0\frac{\left(7.854\frac{P}{2} + 1.854\frac{P}{2}\right)}{7.0\ P} = 0.694$$

3.4.5.2.1.2 Two or More Design Lanes Loaded

The live load distribution factor for two or more design lanes loaded is

$$gM_{2+}^e = e\ gM_{2+}^i$$

$$e = 0.77 + \frac{d_e}{9.1}$$

d_e = horizontal distance from the centerline of the exterior web of exterior beam at the deck level to the interior edge of curb or traffic barrier

$$gM_{2+}^{i} = 0.075 + \left(\frac{S}{9.5}\right)^{0.6}\left(\frac{S}{L}\right)^{0.2}\left(\frac{K_g}{12.0Lt_s^3}\right)^{0.1}$$

$$gM_{2+}^{i} = 0.075 + \left(\frac{7}{9.5}\right)^{0.6}\left(\frac{7}{162.995}\right)^{0.2}\left(\frac{3244494.4}{12.0 \cdot 162.995 \cdot 7^3}\right)^{0.1} = 0.598$$

$$e = 0.77 + \frac{2.855}{9.1} = 1.084$$

$$gM_{2+}^{e} = 1.084(0.598) = 0.648$$

The girders are skewed with respect to end of the bridge. The skew correction factor is given in LRFD Table 4.6.2.2.2e-1.

$$f = 1 - c_1(tan\,\theta)^{\,1.5}$$

$$c_1 = 0.0\ for\ \theta < 30°$$

The skew correction factor is 1.0.

3.4.5.3 *Distribution of Live Loads per Lane for Shear in Exterior Beams*

LRFD Table 4.6.2.2.3b-1 gives the live load distribution factors for shear in exterior beams. For two or more loaded lanes the exterior beam distribution factor is a function of the interior beam distribution factor. The interior beam distribution factor is given in LRFD Table 4.6.2.2.3a-1.

3.4.5.3.1 Compute Distribution Factor for Shear

Check the range of applicability for live load distribution factors.

Range Variable	Value	Status
3.5 ft ≤ S ≤ 16 ft	*S = 7.0 ft*	**OK**
4.5 in ≤ t_s ≤ 12 in	*t_s = 7.0 in*	**OK**
20 ft ≤ L ≤ 240 ft	*L =162.995 ft*	**OK**
N_b ≥ 4	*N_b = 6*	**OK**
$-1.0 \le d_e \le 5.5$	$d_e = 2.855$ft	**OK**

3.4.5.3.1.1 One Design Lane Loaded

The live load distribution factor for one loaded lane is computed by the lever rule.

$$gV_i^e = 0.694$$

3.4.5.3.1.2 Two or More Design Lanes Loaded

The live load distribution factor for two or more loaded lanes is

$$gV_{2+}^{e} = e\ gV_{2+}^{i}$$

$$e = 0.6 + \frac{d_e}{10}$$

$$gV_{2+}^{i} = 0.2 + \frac{S}{12} - \left(\frac{S}{35}\right)^{2.0}$$

$$gV_{2+}^{i} = 0.2 + \frac{7}{12} - \left(\frac{7}{35}\right)^{2.0} = 0.743$$

$$e = 0.6 + \frac{2.855}{10} = 0.889$$

The exterior beam cannot be designed for less load than the interior beam so $e = 1.0$

$$gV_{2+}^{e} = 1.0(0.743) = 0.743$$

The skew correction factor is given in LRFD Table 4.6.2.2.3c-1.

$$f = 1.0 + 0.2\left(\frac{12.0Lt_s^3}{K_g}\right)^{0.3} tan\,\theta$$

The average skew angle is $\theta = \frac{0+1.57}{2} = 0.79°$

$$f = 1.0 + 0.2\left(\frac{12.0 \cdot 162.995 \cdot 7^3}{3244494.4}\right)^{0.3} tan(0.79) = 1.002$$

$$gV_{2+}^{e} = 1.002(0.743) = 0.744$$

LRFD 4.6.2.2.3c - The skew correction factor is linearly interpolated between 1.0 at mid-span to its full value at the obtuse corner. Since the skew correction factor is 1.002, that level of detail will not be shown in these calculations. However, PGSuper does interpolate the skew correction factor as required by AASHTO LRFD.

3.4.5.4 *Live Load Distribution Factor Summary*

Distribution Factor Summary for Strength and Service Limit States

Distribution Factor	1 Loaded Lane	2+ Loaded Lanes	Controlling Factor
Moment (gM)	0.694	0.648	0.694
Shear (gV)	0.694	0.744	0.744

3.4.5.5 *Live Load Distribution Factor for Fatigue Limit State*

The fatigue live load distribution uses the factor for one loaded lane (LRFD 3.6.1.4.3b). The single lane distribution factors include a multiple presence factor of 1.2 when computed by the equations in LRFD Section 4. The multiple presence factor for fatigue loading is 1.0 (LRFD 3.6.1.1.2). Typically, the one loaded lane distribution factors are divided by 1.2 to get the fatigue distribution factors. However, in this case, the one loaded lane distribution factors are computed by the lever rule with a multiple presence factor of 1.0 per WSDOT policy so dividing by 1.2 is not needed.

Distribution Factor Summary for Fatigue Limit States

Distribution Factor	1 Loaded Lane
Moment (gM)	0.694
Shear (gV)	0.694

4 Flexure Design

WSDOT and local girder fabricators developed the design methodology used by PGSuper. The concept is to design for optimized fabrication of precast, prestressed concrete bridge girders. The primary goal is to determine the least required concrete strength at release and initial lifting while simultaneously placing the least possible demand on the stressing system

and achieving adequate stability of the girder during handling operations. A detailed description and numerical example of optimized fabrication design is available in the PCI Journal[2]. Figure 4-1 gives a high-level summary of the design procedure. Girder stresses and stability at initial lifting and hauling are integral elements of the design process. Lifting and hauling conditions often govern the design.

Designing precast, prestressed concrete bridge girders for lateral stability ensures safety and constructability. AASHTO LRFD 5.5.4.3 requires buckling and stability of precast members during handling, transportation, and erection to be investigated. PCI's Aspire Magazine[3] presents WSDOT's perspective on stability design.

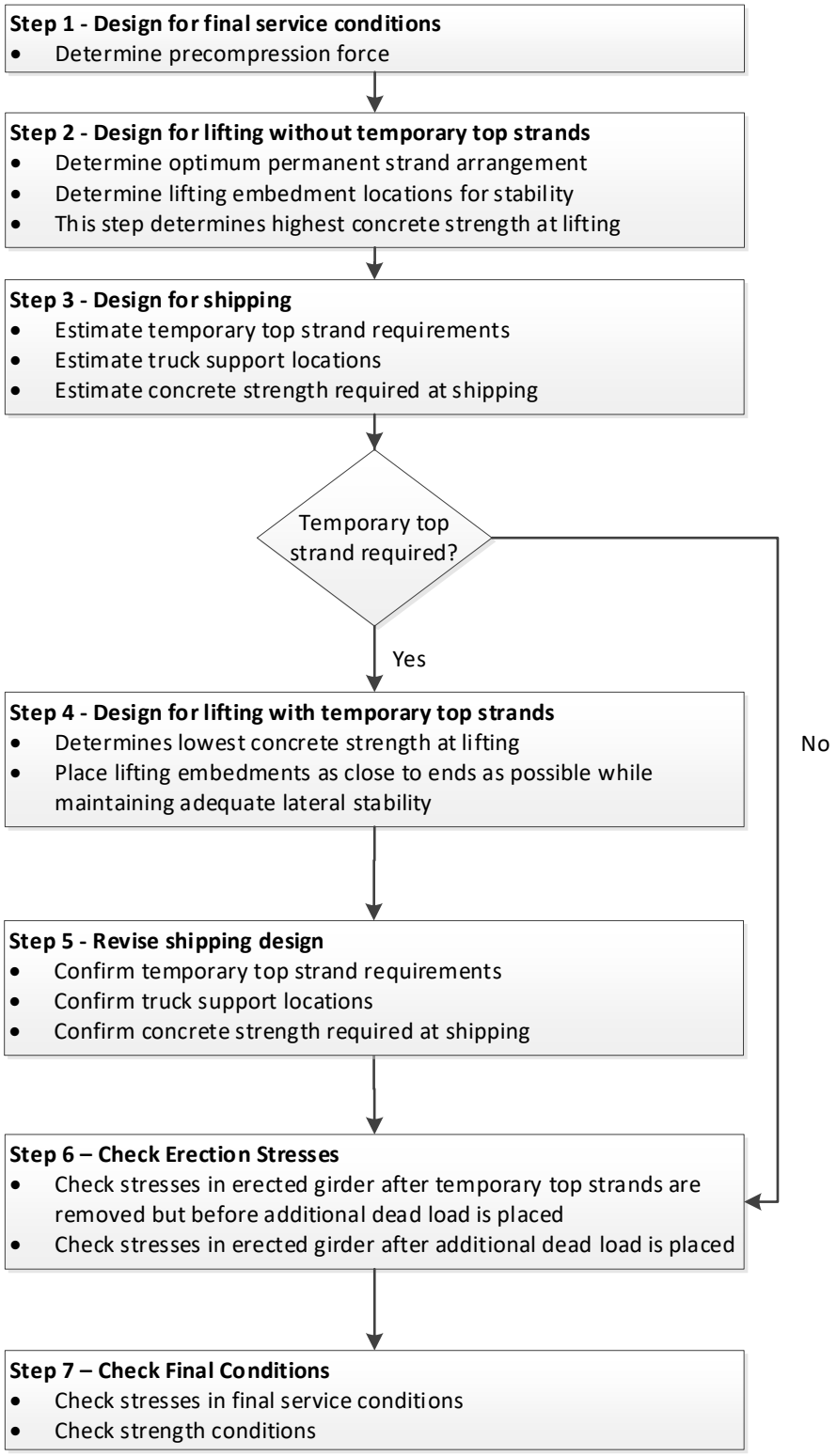

Figure 4-1: Optimized Fabrication Girder Design Procedure

4.1 Step 1 Design for Final Service Conditions

Design for the Service III limit state for tensile stresses at the bottom of the girder at mid-span.

4.1.1 Stresses due to loads on non-composite section

$$f = \frac{M}{S}$$

$$S_t = -19152.5in^3$$

$$S_b = 20594.8in^3$$

Load	Moment (k-ft)	$f_t(ksi)$	$f_b(ksi)$
Girder	3368.43	-2.110	1.963
Diaphragms	140.17	-0.088	0.082
Slab	2465.61	-1.545	1.437
Haunch	760.28	-0.476	0.443

4.1.2 Stresses due to loads on the composite section

4.1.2.1 *Stress due to dead loads*

$$f = \frac{M}{S}$$

$$S_{tgc} = -49599.7in^3$$

$$S_{bc} = 25509.6in^3$$

Load	Moment (k-ft)	$f_t(ksi)$	$f_b(ksi)$
Barrier	732.12	-0.177	0.344
Future Overlay	739.63	-0.179	0.348

4.1.2.2 *Live Load Stresses*

The live load moments computed above are for a full lane of load. These values must be scaled with the live load distribution factor to get a per girder moment

$$f = g\frac{M_{LLIM}}{S}$$

$$S_{tgc} = -49599.7in^3$$

$$S_{bc} = 25509.3in^3$$

Load	Moment (k-ft per lane)	g	Moment (k-ft per girder)	$f_t(ksi)$ Min	$f_t(ksi)$ Max	$f_b(ksi)$ Min	$f_b(ksi)$ Max
Design (HL93)	5485.09	0.694	3804.05	-0.920	0	0	1.789
Fatigue	2686.86	0.694	1863.40	-0.451	0	0	0.877

4.1.2.3 *Stress due to slab shrinkage*

Girder stresses must include those due to slab shrinkage when gains due to slab shrinkage are included in the effective prestress force. The equivalent force is illustrated in Figure 4-2.

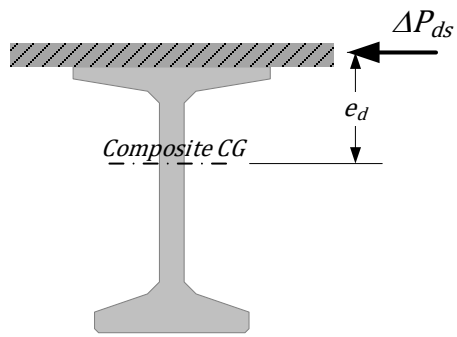

Figure 4-2: Equivalent deck shrinkage force

$$\Delta P_{ds} = \frac{-\varepsilon_{ddf} A_d E_{c\,deck}}{\left[1 + 0.7\psi_d\left(t_f, t_d\right)\right]}$$

$$f_{ss} = \Delta P_{ds}\left(\frac{1}{A_c} - \frac{e_d}{S_c}\right)$$

$$\varepsilon_{ddf} = K_{sh} k_s k_{hs} k_f k_{td} 0.48 \times 10^{-3}$$

$$k_s = 1.45 - 0.13\left(\frac{V}{S}\right) \geq 1.0$$

PGSuper computes the volume of the deck slab by integrating the full bridge width cross-sectional area over the length of the slab, measured along the alignment curve. This is the most general solution and accounts for deck slabs that vary in width. The surface area is twice the plan area (top and bottom of slab) less the common area with the girder top flanges plus the area of exposed slab edges. PGSuper computes the volume to surface area ratio to be:

$$\frac{V}{S} = 4.154in$$

Use the gross slab depth when computing slab shrinkage effects. Shrinkage is an early age effect; therefore, the sacrificial depth is part of the deck slab that is shrinking.

$$k_s = 1.45 - 0.13(4.154) = 0.910 < 1.0 \;\therefore 1.0$$

$$k_{hs} = 2.00 - 0.014H = 2.00 - 0.014(75) = 0.95$$

Slab concrete age at time of initial loading is $f'_{ci} = 0.8f'_c$. (LRFD 5.4.2.3.1)

$$f'_{ci} = 0.8f'_c = 0.8(4ksi) = 3.2\ ksi$$

$$k_f = \frac{5}{1 + f'_{ci}} = \frac{5}{1 + 3.2} = 1.19$$

$$t = t_f - t_d = 2000 - 120 = 1880\ days$$

$$k_{td} = \frac{t}{12\left(\frac{100 - 4f'_{ci}}{f'_{ci} + 20}\right) + t} = \frac{1880}{12\left(\frac{100 - 4(3.2)}{3.2 + 20}\right) + 1880} = 0.977$$

$$K_{sh} = 0.5 \textit{ (BDM 5.1.4.3.D – use 50\% slab shrinkage strain)}$$

$$\varepsilon_{ddf} = (0.5)(1.0)(0.95)(1.19)(0.977)(0.48 \times 10^{-3}) = 0.265 \times 10^{-3}$$

$$\psi_d(t_f, t_d) = 1.9 k_s k_{hc} k_f k_{td} t_i^{-0.118}$$

$$k_{hc} = 1.56 - 0.008H = 1.56 - 0.008(75) = 0.96$$

$$t_i = 1\ days$$

$$\psi_d(t_f, t_d) = 1.9(1.0)(0.96)(1.19)(0.978)(1)^{-0.118} = 2.12$$

The deck overhang varies along the length of the girder. At the mid-span section, the area of the deck that contributes to shrinkage is

$$A_d = 681.165 in^2$$

The deck shrinkage force is

$$\Delta P_{ds} = \frac{(-0.265 \times 10^{-3})(681.165 in^2)(4266.223 ksi)}{[1 + 0.7(2.12)]} = -310.0\ kip$$

The composite girder area is

$$A_c = 1349.614 in^2$$

Recall that the effective overhang for section properties is limited to S/2.

The eccentricity of the center of the deck with respect to the composite section is

$$e_d = -\left(Y_{tc} + \frac{t_{gross\ slab\ depth}}{2}\right) = -\left(25.133\ in + \frac{7.5 in}{2}\right) = -28.883 in$$

$$S_{tgc} = -49599.7 in^3$$

$$S_{bc} = 25509.3 in^3$$

$$f_{top} = (-310.0 kip)\left(\frac{1}{1349.614 in^2} + \frac{-28.883 in}{-49599.7 in^3}\right) = -0.410\ ksi$$

$$f_{bot} = (-310.0 kip)\left(\frac{1}{1349.614 in^2} + \frac{-28.883 in}{25509.3 in^3}\right) = 0.121\ ksi$$

4.1.2.4 *Estimate Prestressing*

Typically, the governing limit state for final service conditions is Service III

$$Service\ III = 1.0DC + 1.0DW + 0.8(LL + IM)$$

$$f_b = 1.963 ksi(girder) + 0.082 ksi(diaphragm) + 1.437 ksi(slab) + 0.443 ksi(haunch) + 0.344 ksi(barrier) + 0.348 ksi(future\ overlay) + 0.121 ksi(slab\ shrinkage) + (0.8)(1.789 ksi)(Design\ LLIM) = 6.169 ksi$$

The stress in the girder concrete due to prestressing is

$$f_{ps} = \frac{P}{A} + \frac{Pe}{S}$$

The tension limit is 0.0 ksi per BDM 5.2.1.C.

$$f_b + f_{ps} = 0.0\ ksi$$

For load rating, use the tension stress limit from the LRFD Bridge Design Specifications (BDM 13.2.4)

Assume the resultant prestress force is 2" above the bottom of the girder.

$$e = Y_b - 2in = 35.657in - 2in = 33.657in$$

$$6.169ksi + \frac{P}{923.531in^2} + \frac{P(33.657in)}{20594.8in^3} = 0.0ksi$$

$$P = -2270.5kip$$

Assume a final effective prestress of 85% of the initial prestress (15% prestress loss)

$$P = N(0.217in^2)(0.85)\left(0.75f_{pu}\right)$$

$$2270.5kip = N(0.217in^2)(0.85)(0.75)(270ksi)$$

$$N = 60.8$$

Use 61 strands.

$$P = 61(0.217in^2)(0.85)(0.75)(270ksi) = 2278.4\ kip$$

4.1.3 Check Estimate of Final Concrete Strength

4.1.3.1 *Service limit state - compression with live load*

Compression at the top of girder, Service I limit state with live load is limited to $0.6f'_c$.

Service I limit state for compression stresses at the top of the girder at mid-span.

$$Service\ I = 1.0DC + 1.0DW + 1.0(LL + IM)$$

$$f_t = -2.110ksi(girder) - 0.088ksi(diaphragm) - 1.545ksi(slab) - 0.476ksi(haunch) - 0.177ksi(barrier) - 0.179ksi(future\ overlay) - 0.410ksi(slab\ shrinkage) - 0.920ksi(Design\ LLIM) = -5.905\ ksi$$

The stress due to prestressing is

$$f_{ps} = \frac{P}{A} + \frac{Pe}{S}$$

$$f_{ps} = \frac{-2278.4kip}{923.531in^2} + \frac{(-2278.4kip)(33.657in)}{-20594.8in^3} = 1.256ksi$$

Compute the required concrete strength

$$-0.6f'_c = 1.256ksi - 5.905ksi = -4.649ksi$$

$$f'_c = 7.748ksi$$

4.1.3.2 *Service limit state - compression without live load*

Compression at the top of girder, Service I limit state without live load is limited to $0.45f'_c$.

Service I limit state for compression stresses at the top of the girder at mid-span.

$$Service\ I = 1.0DC + 1.0DW$$

$$f_t = -2.110ksi(girder) - 0.088ksi(diaphragm) - 1.545ksi(slab) - 0.476ksi(haunch) - 0.177ksi(barrier) - 0.179ksi(futre\ overlay) - 0.410ksi(slab\ shrinkage) = -4.985\ ksi$$

The stress in girder concrete due to prestressing is

$$f_{ps} = 1.256\ ksi$$

Compute the required concrete strength

$$-0.45f'_c = 1.256ksi - 4.985ksi = -3.729ksi$$

$$f'_c = 8.29ksi$$

4.1.3.3 *Fatigue limit state*

Compression at the top of girder, Fatigue I limit state. Stress is limited to $0.4f'_c$.

Fatigue I limit state for compression stresses at the top of the girder at mid-span.

$$Fatigue\ I = 0.5DC + 0.5DW + 1.75(LL + IM)$$

$$f_t = 0.5\big(-2.110ksi(girder) - 0.088ksi(diaphragm) - 1.545ksi(slab) - 0.476ksi(haunch) - 0.177ksi(barrier) - 0.179ksi(future\ overlay) - 0.410ksi(slab\ shrinkage)\big) + 1.75(-0.451ksi)(Fatigue\ LLIM) = -3.282\ ksi$$

The stress in girder concrete due to prestressing is

$$f_{ps} = \frac{-2367.44kip\ (from\ PGSuper)}{923.531in^2} + \frac{(-2367.44kip)(33.657in)}{-20594.8in^3} = 1.327ksi$$

$$f_{ps} = 1.327\ ksi$$

Compute the required concrete strength

$$-0.4f'_c = 0.5(1.327)ksi - 3.282ksi = -2.618ksi$$

$$f'_c = 6.55ksi$$

The required concrete strength does not exceed our assumed value of 8.7 ksi. **OK**

4.2 Step 2 - Design for Lifting without Temporary Top Strands

Temporary top strands are generally not required for lifting of girders. This step identifies the lifting locations that provide adequate lateral stability and the corresponding concrete strength. The optimum strand arrangement is also determined.

4.2.1 Proportion Strands

The optimum exit location for the permanent pretensioning results in the compressive stress at the transfer point or lift point being approximately equal to the compressive stress at the harp point. This provides the lowest exit eccentricity that does not increase the required concrete strength at lifting. Finding this location is an iterative process. Experience has shown that a good starting point is a ratio of straight-to-harped strands of approximately 2:1. Manipulation of the harped strands varies the exit eccentricity.

The harped strand exit location can be manipulated in one of two ways: 1) by lowering a fixed number of harped strands at the girder ends or, 2) by leaving the harped strands at their highest exit location and reducing the number of harped strands by dropping pairs of strands from the harped strand group into the straight strand group. Minimizing the number of harped strands held at their highest position at the ends of the girder provides space over the height of the web for longitudinal reinforcement that may protrude from the end of the girder for making a connection with diaphragm concrete.

The optimal arrangement of strands for this girder is 44 straight stands with an eccentricity of $31.748\ in$ and 17 harped strands with end eccentricity of $-26.813\ in$ and harp point eccentricity of $30.775\ in$. The permanent strand eccentricity at 0.5L is $31.447\ in$.

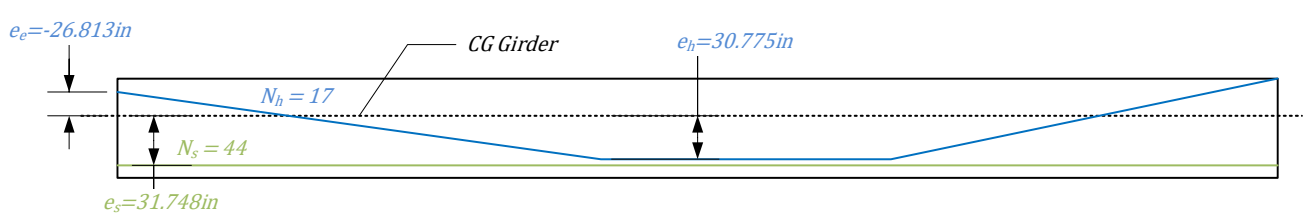

Figure 4-2: Optimum Strand Arrangement

4.2.2 Prestress losses

4.2.2.1 *Initial relaxation before transfer*

Prior to the 2005 interim revisions to the LRFD 3rd Edition, relaxation before prestress transfer was included in prestress loss calculations. Since the 2005 interim revisions, this is no longer required based on the idea that fabricators can overstress strands to achieve an effective prestress of $0.75f_{pu}$ at release. However, WSDOT retains the practice of including relaxation prior to prestress transfer because it reflects the production practices used by local fabricators.

$$\Delta f_{pR0} = \frac{log\ (24.0t)}{40.0}\left[\frac{f_{pj}}{f_{py}} - 0.55\right] f_{pj}$$

$$f_{pj} = 0.75f_{pu} = 0.75(270) = 202.5ksi$$

$$f_{py} = 0.9f_{pu} = 243ksi$$

$$t = 1\ day$$

$$\Delta f_{pR0} = \frac{log\ (24.0 \cdot 1day)}{40}\left[\frac{202.5ksi}{243.0ksi} - 0.55\right](202.5ksi) = 1.980\ ksi$$

This calculation is for intrinsic relaxation of the strand. Intrinsic relaxation is associated with strand tensioned between two stationary points such as in a testing machine or between tensioning bulkheads.

4.2.2.2 *Elastic Shortening*

$$\Delta f_{pES} = \frac{E_p}{E_{ci}} f_{cgp}$$

$$f_{cgp} = \frac{P}{A} + \frac{Pe^2}{I} - \frac{M_g e}{I}$$

$$P = N(a_{ps})(f_{pj} - \Delta f_{pR0} - \Delta f_{pES})$$

Solve this equation iteratively for P.

Assume 10% initial loss and $f'_{ci} = 7.4\ ksi$.

$$E_{ci} = 120000(1.0)(0.155)^2(7.4)^{0.33} = 5580.731\ ksi$$

$$P = 61(0.217)(1 - 0.10)(202.5) = 2412.4\ kip$$

$$f_{cgp} = \frac{2412.4\ kip}{923.531in^2} + \frac{(2412.4kip)(31.477in)^2}{734356.0in^4} - \frac{(3514.22k \cdot ft)\left(\frac{12in}{1ft}\right)(31.477in)}{734356.0in^4} = 4.059\ ksi$$

$$\Delta f_{pES} = \frac{28500ksi}{5580.731ksi}(4.059ksi) = 20.68ksi$$

$$P = (61)(0.217in^2)(202.5ksi - 1.98ksi - 20.68ksi) = 2380.5\ kip$$

PGSuper performs this calculation with a very small convergence tolerance. The calculations are also performed at many points along the girder because the center of the prestress force changes due to harped strand location and the girder dead load moment changes along the length of the girder. There is less elastic shortening effect at the ends of the girder than at mid-span. Since stability tends to govern the design, and temporary strands require extra effort by the fabricator and the contractor, this refinement in the analysis is used to minimize concrete strength and temporary strand usage. The effective prestress force at release and initial lifting for various points (as determined by PGSuper) are given below. The initial loss converges to 11%.

Location	Effective Prestress after release, $P(kip)$	$\Delta f_{pES}\ (ksi)$
PSXFR	2423.16	17.461
HP	2380.27	20.701
0.5Lg	2384.47	20.384

4.2.3 Concrete strength for form stripping

This is not an essential design step; however, it helps to illustrate that the initial lifting case typically governs the initial concrete strength. Check the point of prestress transfer and the harp point.

4.2.3.1 *Stress in girder concrete due to prestressing*

$$f_{ps} = \frac{P}{A} + \frac{Pe}{S}$$

From PGSuper, the effective prestress force at the point of prestress transfer is $P = 2423.16\ kip$ with an eccentricity of $16.166\ in$.

$$f_t = \frac{-(2423.16kip)}{923.531in^2} + \frac{(-2423.16kip)(16.166in)}{-19152.5in^3} = -0.578ksi$$

$$f_b = \frac{-(2423.16kip)}{923.531in^2} + \frac{(-2423.16kip)(16.166in)}{20594.8in^3} = -4.526ksi$$

From PGSuper, the effective prestress force at the harp point is $P = 2380.27\ kip$ with an eccentricity of $31.477\ in$.

$$f_t = \frac{-(2380.27kip)}{923.531in^2} + \frac{(-2380.27kip)(31.477in)}{-19152.5in^3} = 1.335ksi$$

$$f_b = \frac{-(2380.27kip)}{923.531in^2} + \frac{(-2380.27kip)(31.477in)}{20594.8in^3} = -6.215ksi$$

4.2.3.2 *Stress due to girder self-weight*

$$M_g = \frac{w_g}{2}(L_s x - x^2)$$

At the point of prestress transfer

$$x = 60d_b = 60(0.6in) = 36in = 3ft$$

$$M_g = \frac{(1.058klf)}{2}\left((162.995ft)(3ft) - (3ft)^2\right) = 253.96k \cdot ft$$

$$f_t = \frac{253.96k \cdot ft}{-19152.5in^3}\left(\frac{12in}{1ft}\right) = -0.159ksi$$

$$f_b = \frac{253.96k \cdot ft}{20594.8in^3}\left(\frac{12in}{1ft}\right) = 0.148ksi$$

At the harp point

$$x = 0.4L_g = 0.4(162.995ft) = 65.198ft$$

$$M_g = \frac{(1.058klf)}{2}\left((162.995ft)(65.198ft) - (65.198ft)^2\right) = 3373.66k \cdot ft$$

$$f_t = \frac{3373.66k \cdot ft}{-19152.5in^3}\left(\frac{12in}{1ft}\right) = -2.114ksi$$

$$f_b = \frac{3373.66k \cdot ft}{20594.8in^3}\left(\frac{12in}{1ft}\right) = 1.966ksi$$

4.2.3.3 *Total stress*

At the point of prestress transfer

$$f_t = -0.578 + -0.159 = -0.738\ ksi$$

$$f_b = -4.526 + 0.148 = -4.378\ ksi$$

At the harp point

$$f_t = 1.335 - 2.114 = -0.779\ ksi$$

$$f_b = -6.215 + 1.996 = -4.219\ ksi$$

4.2.3.4 *Required strength at form stripping*

At the point of prestress transfer

$$-0.65f'_{ci} = -4.378ksi$$

$$f'_{ci} = 6.74\ ksi$$

At the harp point

$$-0.65f'_{ci} = -4.219ksi$$

$$f'_{ci} = 6.49\ ksi$$

Theoretically, the concrete curing system and forms can be removed, and the prestress force can be imparted into the girder at this concrete strength. This would allow crews to begin work and reduce the time until construction of the next girder can begin. However, there must be a high degree of confidence that the lifting and final concrete strength targets can be attained.

4.2.4 Check girder stability

PGSuper performs many iterations to converge on an adequate lifting configuration. The solution converges for lifting devices located 11 ft from the ends of the girder.

The PGSuper Fabrication Options Report gives the required lift point and initial concrete strength for lifting without temporary strands as well as lifting with pretensioned or post-tensioned temporary strands.

Actual imperfections of the girder, such as sweep and offset of lifting loops, are not known at design time. For design, assume the maximum values permitted by WSDOT construction tolerances.

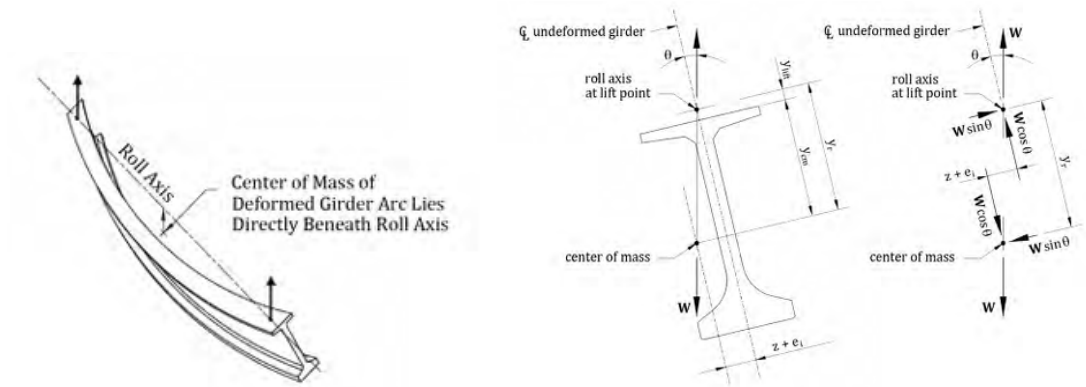

Figure 4-3: Equilibrium of Hanging Girder

4.2.4.1 *Vertical Location of Center of Gravity*

The location of the center of gravity is critical to the stability analysis. Girder camber, sweep, and lift loop offset all factor into the location of the center of gravity with respect to the lifting roll axis.

4.2.4.1.1 Estimate Camber

Compute camber for the girder in the hanging configuration. The stability analysis procedure needs the camber measured from a datum at the ends of the girder, not the lift points.

4.2.4.1.1.1 Girder

The total girder deflection relative to the end of the girder is the sum of the deflection at the girder ends and the mid-span deflection.

Figure 4-4: Girder Self-Weight Deflection during Lifting

$$L_s = L_g - 2a = 162.995ft - 2(11ft) = 140.995ft$$

At girder ends

$$\Delta_{g1} = \frac{w_g a}{24E_{ci}I_x}[3a^2(a + 2L_s) - L_s^3]$$
$$= \frac{(-1.058klf)(11ft)}{24(5580.731ksi)(734356.0in^4)}\left[3(11ft)^2\left(11ft + 2(140.995ft)\right) - (140.995ft)^3\right]\left(\frac{1728in^3}{1ft^3}\right)$$
$$= 0.551\ in$$

Mid-span

$$\Delta_{g2} = \frac{5w_g L_s^4}{384E_{ci}I_x} - \frac{w_g a^2 L_s^2}{16E_{ci}I_x} = \left[\frac{5(-1.058klf)(140.995ft)^4}{384(5580.731ksi)(734356.0in^4)} - \frac{(-1.058klf)(11ft)^2(140.995ft)^2}{16(5580.731ksi)(734356.0in^4)}\right]\left(\frac{1728in^3}{1ft^3}\right)$$
$$= -2.296in + 0.067in = -2.229in$$

4.2.4.1.1.2 Prestressing

Since the girder is unrestrained, the location of the supports does not affect the overall prestress deflection measured between the ends of the girder and the mid-point.

4.2.4.1.1.2.1 Straight Strands

$$P = \left(\frac{44}{61}\right)(2384.47kip) = 1719.95kip$$

$$\Delta_{ss} = \frac{PeL^2}{8E_{ci}I_x} = \frac{(1719.95kip)(31.447in)(162.995ft)^2}{8(5580.731ksi)(734356.0in^4)}\left(\frac{144in^2}{1ft^2}\right) = 6.308in$$

4.2.4.1.1.2.2 Harped Strands

$$P = \left(\frac{17}{61}\right)(2384.47kip) = 664.52\ kip$$

$$e' = e_{hp} - e_e = 30.775in - (-26.813in)) = 57.588\ in$$

$$b = 0.4$$

$$N = \frac{Pe'}{bL} = \frac{(664.52kip)(57.588in)}{(0.4)(162.995ft)}\left(\frac{1ft}{12in}\right) = 48.91kip$$

$$\Delta_{hs} = \frac{b(3-4b^2)NL^3}{24E_{ci}I_x} + \frac{Pe_eL^2}{8E_{ci}I_x}$$
$$= \frac{0.4(3-4(0.4)^2)(48.91kip)(162.995ft)^3}{24(5580.731ksi)(734356.0in^4)}\left(\frac{1728in^3}{1ft^3}\right)$$
$$+ \frac{(664.52kip)(-26.813in)(162.995ft)^2}{8(5580.731ksi)(734356in^4)}\left(\frac{144in^2}{1ft^2}\right) = 3.513in - 1.973in = 1.540in$$

4.2.4.1.1.3 Camber at lifting

$$\Delta_{ps} = \Delta_{ss} + \Delta_{hs} = 6.308in + 1.540in = 7.848in$$

$$\Delta_{camber} = -\Delta_{g1} + \Delta_{g2} + \Delta_{ps} = -0.551in - 2.229in + 7.848in = 5.068in$$

4.2.4.1.2 Location the roll axis above the top of girder

Lifting loops tend to be flexible laterally. Assume the rotation occurs at the top of the girder.

$$y_{rc} = 0in$$

4.2.4.1.3 Offset factor

The offset factor locates the center of mass of the girder with respect to the roll axis.

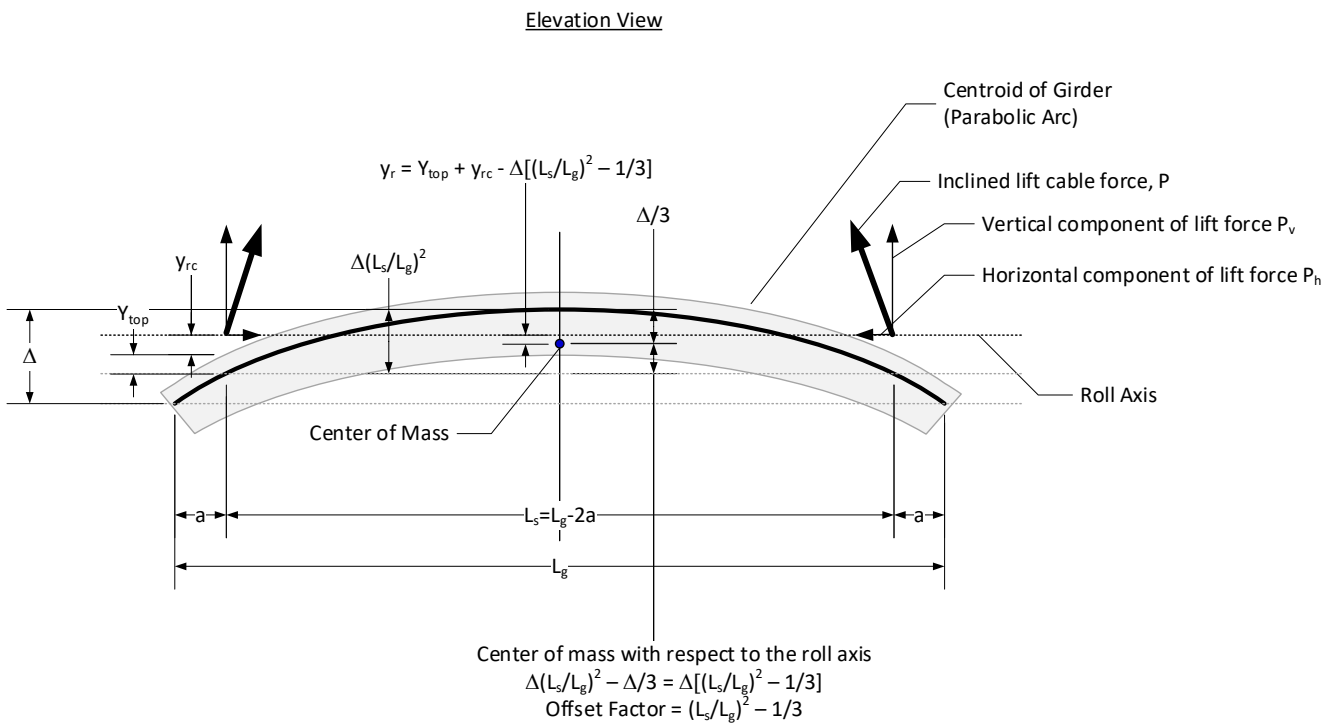

Figure 4-5: Offset Factor

$$F_o = \left(\frac{L_s}{L_g}\right)^2 - \frac{1}{3} = \left(\frac{140.995ft}{162.995ft}\right)^2 - \frac{1}{3} = 0.415$$

4.2.4.1.4 Location of CG below roll axis

$$y_r = Y_{top} - F_o(\Delta_{camber}) + y_{rc} = 38.343in - (0.415)(5.068in) - 0in = 36.24in$$

4.2.4.2 *Lateral Deflection Parameters*

4.2.4.2.1 Lateral Sweep

Sweep tolerance is 1/8" per 10 ft (Std Spec. **6-02.3(25)J**)

$$\Delta_{sweep} = \frac{162.995ft}{10ft}\left(\frac{1}{8}in\right) = 2.037in$$

4.2.4.2.2 Initial Lateral Eccentricity

Initial lateral eccentricity of center of gravity of girder due to lateral sweep and eccentricity of lifting devices from CL girder $e_{lift} = 0.25$ in (Std Spec. **6-02.3(25)I**)

$$e_i = F_o\Delta_{sweep} + e_{lift} = (0.415)(2.037in) + 0.25in = 1.095in$$

4.2.4.2.3 Lateral Deflection of CG

Lateral deflection of center of gravity due to total girder weight applied to weak axis

$$W_g = w_g L_g = (1.058klf)(162.995ft) = 172.45kip$$

$$z_o = \left(\frac{W_g}{12E_{ci}I_{yy}L_g^2}\right)\left(\frac{L_s^5}{10} - a^2L_s^3 + 3a^4L_s + \frac{6a^5}{5}\right)$$
$$= \left(\frac{172.45kip}{12(5580.731ksi)(72018.4in^4)(162.995ft)^2}\right)\left(\frac{(140.995ft)^5}{10} - (11ft)^2(140.995ft)^3 + 3(11ft)^4(140.995ft) + \frac{6}{5}(11ft)^5\right)\left(\frac{1728in^3}{1ft^3}\right) = 12.187\ in$$

4.2.4.3 *Equilibrium tilt angle*

$$\theta_{eq} = \frac{e_i}{y_r - z_o} = \frac{1.095in}{36.24in - 12.187in} = 0.04552\ rad$$

4.2.4.4 *Girder Stresses in Hanging Girder*

4.2.4.4.1 Direct stress at Lift Point and Harp Point

4.2.4.4.1.1 Prestressing

$$f_{ps} = \frac{P}{A} + \frac{Pe}{S}$$

At Lift Point

From PGSuper, the effective prestress force at the lift point is $P = 1746.62\ kip$ straight strands and $P = 674.83kip$ harped strands. The straight and harped strand eccentricities are $31.748in$ and $-17.097in$, respectively.

$$f_t = \frac{-(1746.62kip + 674.83kip)}{923.531in^2} + \frac{(-1746.62kip)(31.748in) + (-674.83kip)(-17.097in)}{-19152.5in^3} = -0.329ksi$$
$$f_b = \frac{-(1746.62kip + 674.83kip)}{923.531in^2} + \frac{(-1746.62kip)(31.748in) + (-674.83kip)(-17.097in)}{20594.8in^3} = -4.754ksi$$

At Harp Point

From PGSuper, the effective prestress force at the harp point is $P = 1716.91\ kip$ straight strands and $P = 663.35kip$ harped strands. The straight and harped strand eccentricities are $31.748in$ and $30.775in$, respectively.

$$f_t = \frac{-(1716.91kip + 663.35kip)}{923.531in^2} + \frac{(-1716.91kip)(31.748in) + (-663.35kip)(30.775in)}{-19152.5in^3} = 1.335ksi$$
$$f_b = \frac{-(1716.91kip + 663.35kip)}{923.531in^2} + \frac{(-1716.91kip)(31.748in) + (-663.35kip)(30.775in)}{20594.8in^3} = -6.215ksi$$

4.2.4.4.1.2 Girder self-weight

$$M_g = \frac{w_g}{2}(L_s x - x^2 - a^2)$$

At Lift Point

$$x = l_t - a = 11ft - 11ft = 0.0ft$$
$$M_g = \frac{(1.058klf)}{2}\left((140.995ft)(0ft) - (0ft)^2 - (11ft)^2\right) = -64.02k \cdot ft$$
$$f_t = \frac{-64.02k \cdot ft}{-19152.5in^3}\left(\frac{12in}{1ft}\right) = 0.040ksi$$
$$f_b = \frac{-64.02k \cdot ft}{20594.8in^3}\left(\frac{12in}{1ft}\right) = -0.037ksi$$

At Harp Point

$$x = 0.4L_g - a = 0.4(162.995ft) - 11ft = 54.198ft$$

$$M_g = \frac{(1.058klf)}{2}\left((140.995ft)(54.198ft) - (54.198ft)^2 - (11ft)^2\right) = 2425.0k \cdot ft$$

$$f_t = \frac{2425.0k \cdot ft}{-19152.5in^3}\left(\frac{12in}{1ft}\right) = -1.519ksi$$

$$f_b = \frac{2425.0k \cdot ft}{20594.8in^3}\left(\frac{12in}{1ft}\right) = 1.413ksi$$

4.2.4.4.1.3 Direct Stress

At Lift Point

$$f_t = -0.329\ ksi + 0.040ksi = -0.289\ ksi$$

$$f_b = -4.754ksi - 0.037ksi = -4.792\ ksi$$

At Harp Point

$$f_t = 1.335ksi - 1.519ksi = -0.184ksi$$

$$f_b = -6.215ksi + 1.413ksi = -4.802\ ksi$$

4.2.4.4.2 Tilt induced stresses

At Lift Point

Top left flange tip at lift point

$$f_{tl} = \frac{M_g W_{tf}}{2I_{yy}}\theta_{eq}$$

$$f_{tl} = \frac{(-64.02k \cdot ft)(49in)}{2(72018.4in^4)}(0.04452\ rad)\left(\frac{12in}{1ft}\right) = -0.012ksi$$

Bottom right flange tip at lift point

$$f_{br} = -\frac{M_g W_{bf}}{2I_{yy}}\theta_{eq}$$

$$f_{br} = -\frac{(-64.02k \cdot ft)(38.375in)}{2(72018.4in^4)}(0.04452\ rad)\left(\frac{12in}{1ft}\right) = 0.009ksi$$

At Harp Point

Top left flange tip at Harp Point

$$f_{tl} = \frac{M_g W_{tf}}{2I_{yy}}\theta_{eq}$$

$$f_{tl} = \frac{(2425.0k \cdot ft)(49in)}{2(72018.4in^4)}(0.04452\ rad)\left(\frac{12in}{1ft}\right) = 0.451ksi$$

Bottom right flange tip at Harp Point

$$f_{br} = -\frac{M_g W_{bf}}{2I_{yy}}\theta_{eq}$$

$$f_{br} = -\frac{(2425.0k \cdot ft)(38.375in)}{2(72018.4in^4)}(0.04452\ rad)\left(\frac{12in}{1ft}\right) = -0.353ksi$$

4.2.4.4.3 Total stress

Top left flange tip at lift point

$$f_{tl} = -0.289\ ksi - 0.012ksi = -0.301ksi$$

Bottom right flange tip at lift point

$$f_{br} = -4.792\ ksi + 0.009ksi = -4.783ksi$$

Top left flange tip at Harp Point

$$f_{tl} = -0.184ksi + 0.451ksi = 0.271ksi$$

Bottom right flange tip at Harp Point

$$f_{br} = -4.802\ ksi - 0.353ksi = -5.155ksi$$

4.2.4.4.4 Determine Concrete Strength at Lifting

For the general stress case, compression stress is limited to $-0.65f'_{ci}$.

Bottom centerline at point of lift $-0.65f'_{ci} = -4.792ksi, f'_{ci} = 7.37\ ksi$

Bottom centerline at harp point $-0.65f'_{ci} = -4.802ksi, f'_{ci} = 7.39\ ksi$

Peak compression stress at the extremities of the section is limited to $-0.7f'_{ci}$

Bottom right flange tip at point of lift point $-0.70f'_{ci} = -4.801ksi, f'_{ci} = 6.85\ ksi$

Bottom right flange tip at harp point $-0.70f'_{ci} = -5.155ksi, f'_{ci} = 7.36\ ksi$

The controlling initial concrete strength matches our assumption.

Limits are provided in BDM Table 5.2.1-1The required concrete strength at the lift point and the harp point are the same. This shows the proportioning of the strands is optimal. If two fewer strands were to be harped (46 straight, 15 harped), the required strength at the lift point would increase to 7.6 ksi which has the potential to increase curing time and could delay construction of the next girder.

4.2.4.5 *Factor of Safety Against Cracking*

Lateral cracking moment

$$M_{cr} = \pm\frac{(f_r - f_{direct})2I_{yy}}{W_{top}}$$

Tilt angle at first crack

$$\theta_{cr} = \frac{M_{cr}}{M_g} \leq 0.4\ rad$$

Cracking moment at lift point – cracking in top right corner

$$f_{direct} = f_{ps} + f_g = -0.329ksi + 0.040ksi = -0.289ksi$$

$$f_r = 0.24\sqrt{f'_{ci}} = 0.24\sqrt{7.4ksi} = 0.653\ ksi$$

$$M_{cr} = -\frac{\left(0.653ksi - (-0.289ksi)\right)2(72018.4in^4)}{49in}\left(\frac{1in}{12ft}\right) = -230.71\ k \cdot ft$$

Tilt angle at first crack at lift point

$$\theta_{cr} = \frac{-230.71k \cdot ft}{-64.02k \cdot ft} = 3.6\ rad \therefore 0.4\ rad$$

Factor of Safety against Cracking at lift point

$$FS_{cr} = \frac{y_r\theta_{cr}}{e_i + z_o\theta_{cr}} = \frac{(36.24in)(0.4)}{1.095in + (12.187in)(0.4)} = 2.429$$

$$FS_{cr} > 1.0\ \ \mathbf{OK}$$

Cracking moment at Harp Point

$$M_{cr} = \frac{\left(0.653ksi - (1.335ksi - 1.519ksi)\right)2(72018.4in^4)}{49in}\left(\frac{1in}{12ft}\right) = 205.19\ k \cdot ft$$

Tilt angle at first crack at Harp Point

$$\theta_{cr} = \frac{205.19k \cdot ft}{2425.0k \cdot ft} = 0.08461rad$$

Factor of Safety against Cracking at Harp Point

$$FS_{cr} = \frac{y_r\theta_{cr}}{e_i + z_o\theta_{cr}} = \frac{(36.24in)(0.08461)}{1.095in + (12.187in)(0.08461)} = 1.443$$

$$FS_{cr} > 1.0\ \ \mathbf{OK}$$

4.2.4.6 *Factor of Safety against Failure*

$$\theta_{max} = \sqrt{\frac{e_i}{2.5z_o}} \leq 0.4\ rad = \sqrt{\frac{1.095}{2.5(12.187)}} = 0.1896\ rad$$

$$FS_f = \frac{y_r\theta_{max}}{e_i + (1 + 2.5\theta_{max})(z_o\theta_{max})} = \frac{(36.24in)(0.1896)}{1.095in + \left(1 + 2.5(0.1896)\right)(12.187in)(0.1896)} = 1.527$$

$$FS_f > 1.5\ \mathbf{OK}$$

Factors of Safety are provided in WSDOT BDM 5.6.3.C-D

4.3 Step 3 - Design for Shipping

Stresses and the factor of safety against cracking depend on, in part, the prestress force at the time of shipping. The prestress force is dependent on the strand configuration, including temporary top strands, and the initial concrete strength. The initial concrete strength is also dependent on the number of temporary top strands.

At this step in the design, the number of temporary top strands and the initial concrete strength for lifting with temporary top strands are unknown.

Using an assumed set of truck parameters and assuming the bunk points are located H (girder height) in from the ends of the girder, PGSuper uses the initial concrete strength determined in Step 2 and computes the factor of safety against rollover failure.

The location of the bunk points is iteratively moved inwards until the factor of safety against rollover failure is greater than 1.5. If an adequate factor of safety cannot be found, the truck parameters are revised, and the process starts over with bunk points at H from the end of the girder.

Once the factor of safety against rollover failure is satisfied, the factor of safety against cracking is evaluated. Temporary top strands are added until the factor of safety is greater than 1.0.

Finally, the compression stresses are evaluated and a concrete strength for shipping is estimated.

Recall that this analysis is based on the initial concrete strength for lifting without temporary top strands. If temporary top strands are required for shipping, it is advantageous to use them during initial lifting. Lift loops can be moved closer to the ends of the girder which reduces the initial concrete strength requirement. A lower initial concrete strength means the final steps in girder production can begin and production of the next girder can start sooner.

The result of the design iterations described above are bunk points need to be at least 13'-8" from the end of the girder to satisfy the rollover stability criteria and 4 temporary top strands are needed to satisfy the cracking criteria. The estimated concrete strength for hauling is 7.8 ksi.

Step 5 of the design procedure will illustrate the details of the shipping stability analysis. The calculations shown in Step 5 are also performed in this step to estimate the bunk points, temporary top strand requirements, and shipping concrete strength.

The non-composite girder, after temporary top strands are removed, carrying the weight of the wet deck concrete is analyzed in Section 4.6.2. This case has a required 28-day design concrete strength of 8.7 ksi. PGSuper will use the 7.8 ksi strength to check shipping, then find the 8.7 ksi requirement, and then begin the design iterations again starting with updating section properties and estimating the prestressing requirements. Therefore the 28-day design concrete strength of 8.7 ksi is assumed in Section 3.3.2.

4.4 Step 4 - Design for Lifting with Temporary Top Strands

Temporary top strands are generally not required for lifting of girders. However, if they are required for shipping it is advantageous to pretension them with the permanent strands as previously described.

From Step 3, 4 temporary top strands are required. These strands are located 2 inches below the top of the girder. Their eccentricity is *-36.343 in*.

4.4.1 Prestress losses

4.4.1.1 *Initial relaxation before transfer*

$$\Delta f_{pR0} = \frac{log\ (24.0 \cdot 1day)}{40}\left[\frac{202.5ksi}{243.0ksi} - 0.55\right](202.5ksi) = 1.980\ ksi$$

4.4.1.2 *Elastic Shortening*

The temporary and permanent strands are at significantly different locations in the cross section. For this reason, compute the elastic shortening loss in the permanent and temporary strands separately.

$$\Delta f_{pES} = \frac{E_p}{E_{ci}} f_{cgp}$$

$$f_{cgp-perm} = \frac{P}{A} + \frac{Pe\ e_p}{I} - \frac{M_g e_p}{I}$$

$$f_{cgp-temp} = \frac{P}{A} + \frac{Pe\ e_t}{I} - \frac{M_g e_t}{I}$$

$$P = N_p(a_{ps})(f_{pj} - \Delta f_{pR0} - \Delta f_{pES-perm}) + N_t(a_{ps})(f_{pj} - \Delta f_{pR0} - \Delta f_{pES-temp})$$

Solve this equation iteratively for P.

The eccentricity of the resultant prestress force at mid-span is 27.304 in.

Assume 10% initial loss and $f'_{ci} = 7.2\ ksi$.

$$E_{ci} = 120000(1.0)(0.155)^2(7.2)^{0.33} = 5530.5\ ksi$$

$$P = (61+4)(0.217)(1-0.10)(202.5) = 2570.6\ kip$$

At CG of permanent strands

$$f_{cgp-perm} = \frac{2570.6\ kip}{923.531in^2} + \frac{(2570.6kip)(27.304in)(31.477in)}{734356.0in^4} - \frac{(3514.22k\cdot ft)\left(\frac{12in}{1ft}\right)(31.477in)}{734356.0in^4} = 3.984\ ksi$$

$$\Delta f_{pES-perm} = \frac{28500ksi}{5530.5ksi}(3.984ksi) = 20.53ksi$$

At CG of temporary strands

$$f_{cgp-temp} = \frac{2570.6\ kip}{923.531in^2} + \frac{(2570.6kip)(27.304in)(-36.343in)}{734356.0in^4} - \frac{(3514.22k\cdot ft)\left(\frac{12in}{1ft}\right)(-36.343in)}{734356.0in^4} = 1.397\ ksi$$

$$\Delta f_{pES-temp} = \frac{28500ksi}{5530.5ksi}(1.397ksi) = 7.20ksi$$

$$P = (61)(0.217in^2)(202.5ksi - 1.98ksi - 20.53ksi) + 4(0.217in^2)(202.5ksi - 1.98ksi - 7.20ksi) = 2550.3\ kip$$

PGSuper performs this calculation with a very small convergence tolerance. The calculations are also performed at many points along the girder because the center of the prestress force changes due to harped strand location and the girder dead load moment changes along the length of the girder. There is less elastic shortening effect at the ends of the girder than at mid-span. The effective prestress force at release and initial lifting for various points (as determined by PGSuper) are given below. The initial loss converges to 11%.

Location	Effective Prestress after release
PSXFR	2585.89 kip
HP	2549.04 kip
0.5Lg	2552.99 kip

4.4.2 Check girder stability

PGSuper performs many iterations to converge on an adequate lifting configuration. The solution converges for lifting devices located 8.25 ft from the ends of the girder when temporary top strands are used.

4.4.2.1 *Vertical Location of Center of Gravity*

4.4.2.1.1 Estimate Camber

The same calculations are made to estimate camber in the lifting without temporary top strand case. The differences are the modulus of elasticity is reduced because f'_{ci} reduced from 7.4 ksi to 7.2 ksi, the lift points moved from 11 ft to 8.25 ft, and temporary top strands are included in the prestress deflection. The resulting camber is

$$\Delta_{camber} = 4.025\ in$$

The camber due to the temporary top strands is computed using the same equation as the straight strands. The temporary top strand eccentricity will be a negative value resulting in a negative, downward deflection

4.4.2.1.2 Offset factor

$$L_s = 162.995 - 2(8.25) = 146.495\ ft$$

$$F_o = \left(\frac{L_s}{L_g}\right)^2 - \frac{1}{3} = \left(\frac{146.495ft}{162.995ft}\right)^2 - \frac{1}{3} = 0.474$$

4.4.2.1.3 Location the roll axis above the top of girder

$$y_{rc} = 0in$$

4.4.2.1.4 Location of CG below roll axis

$$y_r = Y_{top} - F_o(\Delta_{camber}) + y_{rc} = 38.343in - (0.474)(4.025in) - 0in = 36.433in$$

4.4.2.2 *Lateral Deflection Parameters*

4.4.2.2.1 Lateral Sweep

Sweep tolerance is 1/8" per 10 ft

$$e_{sweep} = \frac{162.995ft}{10ft}\left(\frac{1}{8}in\right) = 2.037in$$

4.4.2.2.2 Initial Lateral Eccentricity

Initial lateral eccentricity of center of gravity of girder due to lateral sweep and eccentricity of lifting devices from CL girder

$$e_{lift} = 0.25in$$

$$e_i = F_o e_{sweep} + e_{lift} = (0.474)(2.037in) + 0.25in = 1.217in$$

4.4.2.2.3 Lateral Deflection of CG

Lateral deflection of center of gravity due to total girder weight applied to weak axis

$$W_g = w_g L_g = (1.058klf)(162.995ft) = 172.45kip$$

$$z_o = \left(\frac{W_g}{12E_{ci}I_{yy}L_g^2}\right)\left(\frac{L_s^5}{10} - a^2L_s^3 + 3a^4L_s + \frac{6a^5}{5}\right)$$
$$= \left(\frac{172.45kip}{12(5530.5ksi)(72018.4in^4)(162.995ft)^2}\right)\left(\frac{(146.495ft)^5}{10} - (8.25ft)^2(146.495ft)^3 + 3(8.25ft)^4(146.495ft) + \frac{6}{5}(8.25ft)^5\right)\left(\frac{1728in^3}{1ft^3}\right) = 15.339\ in$$

4.4.2.3 *Equilibrium tilt angle*

$$\theta_{eq} = \frac{e_i}{y_r - z_o} = \frac{1.217in}{36.433in - 15.339in} = 0.05768\ rad$$

4.4.2.4 *Girder Stresses in Hanging Girder*

4.4.2.4.1 Direct stress at Lift Point and Harp Point

4.4.2.4.1.1 Girder concrete stress due to prestressing

$$f_{ps} = \frac{P}{A} + \frac{Pe}{S}$$

From PGSuper, the effective prestress force at the lift point is $P = 1743.87\ kip$ straight strands, $P = 673.64kip$ harped strands and $\mathrm{P} = 167.83$ kip for temporary strands. The straight, harped, and temporary strand eccentricities are $31.748in$,$-19.526in$, and $-36.434in$, respectively.

$$f_t = \frac{-(1743.87kip + 673.64kip + 167.83kip)}{923.531in^2} + \frac{(-1743.87kip)(31.748in) + (-673.64kip)(-19.526in) + (-167.83kip)(-36.343in)}{-19152.5in^3} = -0.914ksi$$

$$f_b = \frac{-(1743.87kip + 673.64kip + 167.83kip)}{923.531in^2} + \frac{(-1743.87kip)(31.748in) + (-673.64kip)(-19.526in) + (-167.83kip)(-36.343in)}{20594.8in^3} = -4.552ksi$$

From PGSuper, the effective prestress force at the harp point is $P = 1717.36\ kip$ straight strands, $P = 663.53kip$ harped strands, and $P = 168.15kip$ temporary strands. The straight, harped, and temporary strand eccentricities are $31.748in$, $30.775in$, and $-36.434\ in$ respectively.

$$f_t = \frac{-(1717.36kip + 663.53kip + 168.15kip)}{923.531in^2} + \frac{(-1717.36kip)(31.748in) + (-663.53kip)(-31.748in) + (-168.15kip)(-36.343in)}{-19152.5in^3} = 0.834ksi$$

$$f_b = \frac{-(1717.36kip + 663.53kip + 168.15kip)}{923.531in^2} + \frac{(-1717.36kip)(31.748in) + (-663.53kip)(-31.748in) + (-168.15kip)(-36.343in)}{20594.8in^3} = -6.102ksi$$

4.4.2.4.1.2 Girder self-weight

$$M_g = \frac{w_g}{2}(L_s x - x^2 - a^2)$$

At Lift Point

$$x = l_t - a = 8.25ft - 8.25ft = 0.0ft$$

$$M_g = \frac{(1.058klf)}{2}\left((146.495ft)(0ft) - (0ft)^2 - (11ft)^2\right) = -36.01k \cdot ft$$

$$f_t = \frac{-36.01k \cdot ft}{-19152.5in^3}\left(\frac{12in}{1ft}\right) = 0.023ksi$$

$$f_b = \frac{-36.01k \cdot ft}{20594.8in^3}\left(\frac{12in}{1ft}\right) = -0.021ksi$$

At Harp Point

$$x = 0.4L_g - a = 0.4(162.995ft) - 8.25ft = 56.948ft$$

$$M_g = \frac{(1.058klf)}{2}\left((146.495ft)(56.948ft) - (56.948ft)^2 - (8.25ft)^2\right) = 2661.8k \cdot ft$$

$$f_t = \frac{2661.8k \cdot ft}{-19152.5in^3}\left(\frac{12in}{1ft}\right) = -1.668ksi$$

$$f_b = \frac{2661.8k \cdot ft}{20594.8in^3}\left(\frac{12in}{1ft}\right) = 1.551ksi$$

4.4.2.4.2 Tilt induced stresses

Top left flange tip at lift point

$$f_{tl} = \frac{M_g W_{tf}}{2I_{yy}}\theta_{eq}$$

$$f_{tl} = \frac{(-36.01k \cdot ft)(49in)}{2(72018.4in^4)}(0.05768\,rad)\left(\frac{12in}{1ft}\right) = -0.008ksi$$

Bottom right flange tip at lift point

$$f_{br} = -\frac{M_g W_{bf}}{2I_{yy}}\theta_{eq}$$

$$f_{br} = -\frac{(-36.01k \cdot ft)(38.375in)}{2(72018.4in^4)}(0.05768\,rad)\left(\frac{12in}{1ft}\right) = 0.007ksi$$

Top left flange tip at Harp Point

$$f_{tl} = \frac{M_g W_{tf}}{2I_{yy}}\theta_{eq}$$

$$f_{tl} = \frac{(2661.8k \cdot ft)(49in)}{2(72018.4in^4)}(0.05768\,rad)\left(\frac{12in}{1ft}\right) = 0.627ksi$$

Bottom right flange tip at Harp Point

$$f_{br} = -\frac{M_g W_{bf}}{2I_{yy}}\theta_{eq}$$

$$f_{br} = -\frac{(2661.8k \cdot ft)(38.375in)}{2(72018.4in^4)}(0.05768\,rad)\left(\frac{12in}{1ft}\right) = -0.491ksi$$

4.4.2.4.3 Total stress

Top left flange tip at lift point

$$f_{tl} = -0.914ksi + 0.023ksi - 0.008ksi = -0.900ksi$$

Bottom left flange tip at lift point

$$f_{br} = -4.401ksi - 0.021ksi + 0.007ksi = -4.566ksi$$

Top left flange tip at Harp Point

$$f_{tl} = 0.834ksi - 1.668ksi + 0.627ksi = -0.207ksi$$

Bottom left flange tip at Harp Point

$$f_{br} = -6.102ksi + 1.551ksi - 0.491ksi = -5.042ksi$$

4.4.2.4.4 Determine Concrete Strength at Lifting

For the general stress case, compression stress is limited to $-0.65f'_{ci}$.

Bottom centerline at point of lift $-0.65f'_{ci} = -4.401 - 0.021 = -4.573ksi, f'_{ci} = 7.0\ ksi$

Bottom centerline at harp point $-0.65f'_{ci} = -6.102 - 1.551 = -4.551ksi, f'_{ci} = 7.0\ ksi$

Peak compression stress at the extremities of the section is limited to$-0.7f'_{ci}$

Bottom left flange tip at point of lift point $-0.70f'_{ci} = -4.556ksi, f'_{ci} = 6.5\ ksi$

Bottom left flange time at harp point $-0.70f'_{ci} = -5.042ksi, f'_{ci} = 7.2\ ksi$ ← Controls

The controlling concrete strength matches the assumed value.

4.4.2.5 *Factor of Safety Against Cracking*

Lateral cracking moment

$$M_{cr} = \pm\frac{(f_r - f_{direct})2I_{yy}}{W_{top}}$$

Tilt angle at first crack

$$\theta_{cr} = \frac{M_{cr}}{M_g} \leq 0.4\ rad$$

Cracking moment at lift point – cracking in top right corner

$$f_{direct} = f_{ps} + f_g = -0.914ksi + 0.023ksi = -0.892ksi$$

$$f_r = 0.24\sqrt{f'_{ci}} = 0.24\sqrt{7.2ksi} = 0.644\ ksi$$

$$M_{cr} = -\frac{\big(0.644ksi - (-0.892ksi)\big)2(72018.4in^4)}{49in}\left(\frac{1in}{12ft}\right) = -376.15\ k\cdot ft$$

Tilt angle at first crack at lift point

$$\theta_{cr} = \frac{-376.151k\cdot ft}{-36.01k\cdot ft} = 10.44\ rad \therefore 0.4\ rad$$

Factor of Safety against Cracking at lift point

$$FS_{cr} = \frac{y_r\theta_{cr}}{e_i + z_o\theta_{cr}} = \frac{(36.433in)(0.4)}{1.217in + (15.339in)(0.4)} = 1.98$$

$$FS_{cr} > 1.0\ \ \textbf{OK}$$

Cracking moment at Harp Point

$$M_{cr} = \frac{\big(0.644ksi - (0.834ksi - 1.668ksi)\big)2(72018.4in^4)}{49in}\left(\frac{1in}{12ft}\right) = 362.1\ k\cdot ft$$

Tilt angle at first crack at Harp Point

$$\theta_{cr} = \frac{362.1k\cdot ft}{2661.8k\cdot ft} = 0.13465rad$$

Factor of Safety against Cracking at Harp Point

$$FS_{cr} = \frac{y_r\theta_{cr}}{e_i + z_o\theta_{cr}} = \frac{(36.433in)(0.13465)}{1.217in + (15.339in)(0.13465)} = 1.5$$

$$FS_{cr} > 1.0\ \ \textbf{OK}$$

4.4.2.6 *Factor of Safety against Failure*

$$\theta_{max} = \sqrt{\frac{e_i}{2.5z_o}} \leq 0.4\,rad = \sqrt{\frac{1.217}{2.5(15.339)}} = 0.17812\,rad$$

$$FS_f = \frac{y_r\theta_{max}}{e_i + (1 + 2.5\theta_{max})(z_o\theta_{max})} = \frac{(36.433in)(0.17812)}{1.217in + \big(1 + 2.5(0.17812)\big)(165.339n)(0.17812)} = 1.256$$

$When\ FS_f < FS_{cr}, FS_f = FS_{cr}\ \therefore FS_f = 1.5$

$$FS_f \geq 1.5\ \mathbf{OK}$$

4.5 Step 5 – Revise Shipping Design

Up to this point initial concrete strength, final concrete strength, and temporary strand requirements have been estimated based on assumed values. This design step verifies the shipping stability design.

Per the WSDOT Standard Specifications, WF girders can be shipped as soon as 10 days and as late as 90 days. The effective prestress force and camber vary during this time range. The analysis is conservative when using the effective prestress force at 10 days and the camber at 90 days (BDM 5.6.3.D.6).

4.5.1 Estimate Prestress Losses at Shipping

Assume hauling to occur as soon as possible (10 days)

4.5.1.1 *Initial Relaxation*

See 4.4.1.1

4.5.1.2 *Elastic Shortening*

See 4.4.1.2

4.5.1.3 *Shrinkage of Girder Concrete*

$$\Delta f_{SRH} = \varepsilon_{bih}E_pK_{ih}$$

$$\varepsilon_{bih} = k_sk_{hs}k_fk_{td}0.48 \times 10^{-3}$$

$$K_{ih}(Permanent\ Strands) = K_{ih-perm} = \frac{1}{1 + \frac{E_p}{E_{ci}}\frac{A_{ps}}{A_g}\left(1 + \frac{A_ge_{ps}e_p}{I_g}\right)\left[1 + 0.7\psi_b(t_f, t_i)\right]}$$

$$K_{ih}(Temporary\ Strands) = K_{ih-temp} = \frac{1}{1 + \frac{E_p}{E_{ci}}\frac{A_{ps}}{A_g}\left(1 + \frac{A_ge_{ps}e_t}{I_g}\right)\left[1 + 0.7\psi_b(t_f, t_i)\right]}$$

$$\psi_b(t_f, t_i) = 1.9k_sk_{hc}k_fk_{td}t_i^{-0.118}$$

$$k_s = 1.45 - 0.13\left(\frac{V}{S}\right) \geq 1.0$$

$$\frac{V}{S} = \frac{AL_g}{PL_g + 2A} = \frac{(923.531in^2)(162.995ft)(\frac{12in}{1ft})}{(289.284in)(162.995ft)\left(\frac{12in}{1ft}\right) + 2(923.531in^2)} = 3.182in$$

$$k_s = 1.45 - 0.13(3.187) = 1.04$$

$$k_{hs} = 2.00 - 0.014H = 2.00 - 0.014(75) = 0.95$$

$$k_{hc} = 1.56 - 0.008H = 1.56 - 0.005(75) = 0.96$$

$$k_f = \frac{5}{1 + f'_{ci}} = \frac{5}{1 + 7.2} = 0.61$$

$$t_i = 1\ day, t_h = 10\ days, t = t_h - t_i = 9\ days$$

$$k_{td}(t = 9days) = \frac{t}{12\left(\frac{100 - 4f'_{ci}}{f'_{ci} + 20}\right) + t} = \frac{9}{12\left(\frac{100 - 4(7.2)}{7.2 + 20}\right) + 9} = 0.223$$

$$t_i = 1\ day, t_f = 2000\ days, t = t_f - t_i = 1999\ days$$

$$k_{td}(t = 1999days) = \frac{t}{12\left(\frac{100 - 4f'_{ci}}{f'_{ci} + 20}\right) + t} = \frac{1999}{12\left(\frac{100 - 4(7.2)}{7.2 + 20}\right) + 1999} = 0.985$$

$$\psi_b(t_f, t_i) = 1.9(1.04)(0.96)(0.61)(0.985)(1)^{-0.118} = 1.135$$

$$\varepsilon_{bih} = (1.04)(0.95)(0.61)(0.223)(0.48 \times 10^{-3}) = 0.000064$$

$$A_{ps} = (61 + 4)(0.217in^2) = 14.105in^2$$

$$K_{ih-perm} = \frac{1}{1 + \frac{28500ksi}{5530.5ksi}\frac{14.105in^2}{923.531in^3}\left(1 + \frac{923.531in^2(27.304in)(31.447in)}{734356.0in^4}\right)[1 + 0.7(1.135)]} = 0.773$$

$$K_{ih-temp} = \frac{1}{1 + \frac{28500ksi}{5530.5ksi}\frac{14.105in^2}{923.531in^3}\left(1 + \frac{923.531in^2(27.304in)(-36.343in)}{734356.0in^4}\right)[1 + 0.7(1.135)]} = 1.04$$

$$\Delta f_{pSRH}(Permanent\ Strands) = (0.000064)(28500ksi)(0.773) = 1.414ksi$$

$$\Delta f_{pSRH}(Temporary\ Strands) = (0.000064)(28500ksi)(1.04) = 1.895ksi$$

4.5.1.4 *Creep of Girder Concrete*

$$\Delta f_{pCRH} = \frac{E_P}{E_{ci}} f_{cgp}\psi_b(t_h, t_i)K_{ih}$$

$$\psi_b(t_h, t_i) = 1.9(1.04)(0.96)(0.61)(0.223)(1)^{-0.118} = 0.257$$

From the elastic shortening loss calculated in 4.4.1.2 (0.5Lg):

$$f_{cgp-perm} = 3.984\ ksi$$

$$f_{cgp-temp} = 1.397\ ksi$$

After multiple iterations in PGSuper:

$$f_{cgp-perm} = 3.945\ ksi$$

$$f_{cgp-temp} = 1.402\ ksi$$

$$\Delta f_{CRH-perm} = \frac{28500ksi}{5530.5ksi}(3.945ksi)(0.257)(0.773) = 4.033ksi$$

$$\Delta f_{CRH-temp} = \frac{28500ksi}{5530.5ksi}(1.402ksi)(0.257)(1.04) = 1.931ksi$$

4.5.1.5 *Relaxation of Prestressing Strands*

The girder concrete holds the prestressing strand in tension. The concrete undergoes creep and shrinkage deformations. The strands are between two points that move toward one another. Relaxation occurs at a reduced rate compared to intrinsic relaxation. The relaxation equations given by the AASHTO LRFD BDS are for reduced relaxation.

$$\Delta f_{pR1H} = \left[\frac{f_{pt}}{K_L'}\frac{log\ (24t_h)}{log(24t_i)}\left(\frac{f_{pt}}{f_{py}} - 0.55\right)\right]\left[1 - \frac{3\left(\Delta f_{pSRH} + \Delta f_{pCRH}\right)}{f_{pt}}\right]K_{ih}$$

$$K_L' = 45$$

$$f_{pt} = f_{pj} - \Delta f_{pR0} - \Delta f_{pES}$$

$$f_{pt-perm} = 202.5\ ksi - 1.98ksi - 20.33ksi = 180.19ksi$$

$$f_{pt-temp} = 202.5\ ksi - 1.98ksi - 7.22ksi = 193.3ksi$$

$$\Delta f_{pR1H-perm} = \left[\frac{180.19ksi}{45}\frac{log\ (24 \cdot 10)}{log\ (24 \cdot 1)}\left(\frac{180.19ksi}{243ksi} - 0.55\right)\right]\left[1 - \frac{3(1.414ksi + 4.098ksi)}{180.19ksi}\right](0.773) = 0.930\ ksi$$

$$\Delta f_{pR1H-temp} = \left[\frac{193.3ksi}{45}\frac{log\ (24 \cdot 10)}{log\ (24 \cdot 1)}\left(\frac{193.3ksi}{243ksi} - 0.55\right)\right]\left[1 - \frac{3(1.895ksi + 1.931ksi)}{193.3ksi}\right](1.04) = 1.779\ ksi$$

PGSuper supports all three methods of computing relaxation described in the AASHTO LRFD BDS (LRFD 5.9.3.4.2c, C5.9.3.4.2c)

4.5.1.6 *Losses at Shipping*

$$\Delta f_{pH} = \Delta f_{pR0} + \Delta f_{pES} + \Delta f_{pLTH}$$

$$\Delta f_{pLTH} = \Delta f_{pSRH} + \Delta f_{pCRH} + \Delta f_{pR1H}$$

$$\Delta f_{pLTH-perm} = 1.414ksi + 4.033ksi + 0.930ksi = 6.376ksi$$

$$\Delta_{pH-perm} = 1.98ksi + 20.654ksi + 6.376ksi = 28.683ksi$$

$$\Delta f_{pLTH-temp} = 1.895ksi + 1.931ksi + 1.779ksi = 5.605ksi$$

$$\Delta_{pH-temp} = 1.98ksi + 7.223ksi + 5.605ksi = 14.808ksi$$

4.5.2 Check Girder Stability

Assume bunk points at 13’-8”.

Per WSDOT BDM 5.6.3 the hauling stability design is based on the least stiff haul truck from BDM Table 5.6.3-1 that allows the stress and stability factors of safety to be achieved.

Table 5.6.3-1 Shipping Support Parameters

Shipping Support Rotational Spring Constant, K_θ (Kip-in/radian)	Shipping Support Center-to-Center Wheel Spacing, W_{cc}
40,000	72
50,000	72
60,000	72 or 96
70,000	96
80,000	96

Assume shipping support parameters for 40,000 kip-in/radian rotational spring constant. That equals to the HT40-72 haul truck configuration in PGSuper.

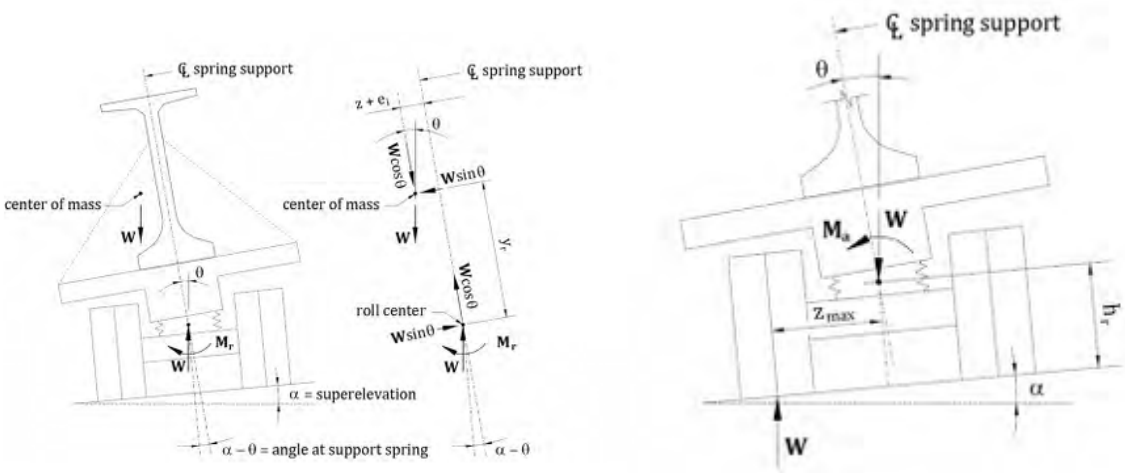

Figure 4-6: Equilibrium during Hauling

4.5.2.1 *Stability Analysis Parameters*

Parameter	Value
Rotational Stiffness	$K_\theta = 40000 \frac{k \cdot in}{rad}$
Center-to-center wheel spacing	$W_{cc} = 72$ in
Height of the roll center above the roadway surface	$H_{rc} = 24$in
Height of the bottom of the girder above roadway	$H_{bg} = 72$ in
Bunk placement tolerance	$e_{bunk} = 1.0$ in
Normal Crown Slope	$\alpha = 0.02 \frac{ft}{ft}$
Maximum Superelevation	$\alpha = 0.06 \frac{ft}{ft}$
Impact for Normal Crown Slope Case	$IM = \pm 20\%$

Impact for Superelevation Case	IM = 0%
Modulus of Rupture	$f_r = 0.24\lambda\sqrt{f_c'} = (0.24)(1.0)\sqrt{8.7ksi} = 0.708ksi$

4.5.2.2 *Vertical Location of Center of Gravity*

4.5.2.2.1 Camber at Hauling

Assume girder transportation occurs as late as possible to maximum camber grown while in storage. Assume transportation occurs at 90 days.

The camber at hauling is equal to the camber at the end of storage plus the change in dead load deflection due to the different support conditions between storage and hauling.

From before, the prestress deflection measured from the ends of the girder is

$$\Delta_{ps} = 7.160in$$

Changing the datum to the storage support location

$$\Delta_{ps1} = 6.897in \text{ at mid-span}$$

$$\Delta_{ps2} = -0.263in \text{ at girder end}$$

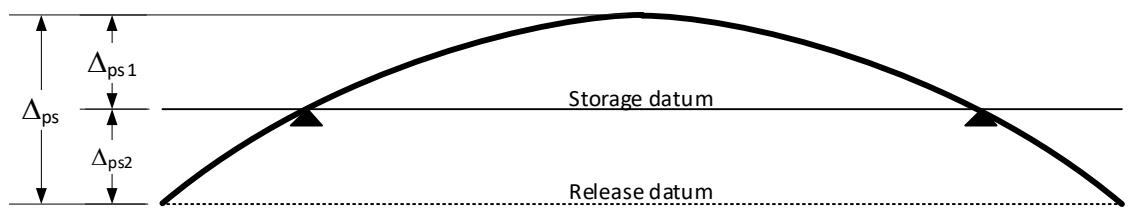

Figure 4-7: Prestress induced Deflection based on Storage Datum

$$L_s = L_g - 2a = 162.995ft - 2(1.708ft) = 159.578ft$$

The dead load deflection at the girder ends during storage is

$$\Delta_{g1} = \frac{w_g a}{24E_{ci}I_x}[3a^2(a+2L_s) - L_s^3]$$
$$= \frac{(-1.058klf)(1.708ft)}{24(5530.5ksi)(734356.0in^4)}\left[3(1.708ft)^2\left(1.708ft + 2(159.578ft)\right) - (159.578ft)^3\right]\left(\frac{1728in^3}{1ft^3}\right)$$
$$= 0.130\ in$$

The dead load deflection at mid-span during storage is

$$\Delta_{g2} = \frac{5w_gL_s^4}{384E_{ci}I_x} - \frac{w_g a^2 L_s^2}{16E_{ci}I_x} = \left[\frac{5(-1.058klf)(159.578ft)^4}{384(5530.5ksi)(734356.0in^4)} - \frac{(-1.058klf)(1.708ft)^2(159.578ft)^2}{16(5530.5ksi)(734356.0in^4)}\right]\left(\frac{1728in^3}{1ft^3}\right)$$
$$= -3.80in$$

Figure 4-8: Girder Self-Weight Deflection during Storage

Creep deflection during storage is

$$\Delta_{creep} = \psi_b(t_h, t_i)(\Delta_{ps} + \Delta_g)$$

$$k_{td}(t = 89days) = \frac{89}{12\left(\frac{100 - 4(7.2)}{7.2 + 20}\right) + 89} = 0.738$$

$$\psi_b(t_h, t_i) = 1.9(1.04)(0.96)(0.61)(0.738)(1)^{-0.118} = 0.852$$

At mid-span

$$\Delta_{creep} = (0.852)(6.897in - 3.80in) = 2.639in$$

At end of girder

$$\Delta_{creep} = (0.852)(-0.263in + 0.130in) = -0.113in$$

Girder deflection in the hauling configuration

$$L_s = 162.995ft - 2(13.67ft) = 135.66ft$$

Mid-span deflection

$$\Delta_{g2} = \frac{5w_g L_s^4}{384E_cI_x} - \frac{w_g a^2 L_s^2}{16E_cI_x} = \left[\frac{5(-1.058klf)(135.66ft)^4}{384(5886.891ksi)(734356.0in^4)} - \frac{(-1.058klf)(13.67ft)^2(135.66ft)^2}{16(5886.891ksi)(734356.0in^4)}\right]\left(\frac{1728in^3}{1ft^3}\right)$$
$$= -1.864in + 0.091in = -1.773in$$

Deflection at girder ends

$$\Delta_{g1} = \frac{w_g a}{24E_cI_x}[3a^2(a + 2L_s) - L_s^3]$$
$$= \frac{(-1.058klf)(13.67ft)}{24(5886.891ksi)(734356.0in^4)}\left[3(13.67ft)^2\left(13.67ft + 2(135.66ft)\right) - (135.66ft)^3\right]\left(\frac{1728in^3}{1ft^3}\right)$$
$$= 0.563\ in$$

We want the total camber measured between the girder ends and mid-span

$$\Delta_{camber} = \left(\Delta_g + \Delta_{ps} + \Delta_{creep}\right)_{mid-span} - \left(\Delta_g + \Delta_{ps} + \Delta_{creep}\right)_{end}$$
$$= (-1.773in + 6.897in + 2.639in) - (0.563in - 0.263in - 0.113in) = 7.576in$$

PGSuper computes $\Delta_{camber} = 7.338\ in$. Use this value going forward.

4.5.2.2.2 Offset Factor

$$F_o = \left(\frac{L_s}{L_g}\right)^2 - \frac{1}{3} = \left(\frac{135.66ft}{162.995ft}\right)^2 - \frac{1}{3} = 0.359$$

4.5.2.2.3 Location of roll axis below top of girder

$$y_{rc} = H_{bg} + H_g - H_{rc} = 72.0in + 74.0in - 24.0in = 122.0in$$

4.5.2.2.4 Location of center of gravity above roll axis

$$y_r = y_{rc} - Y_{top} + F_o(\Delta_{camber}) = 122.0in - 38.343in + 0.359(7.338in) = 86.295in$$

4.5.2.3 *Lateral Deflection Parameters*

4.5.2.3.1 Lateral Sweep

Sweep tolerance = 1/8” per 10 ft

$$\Delta_{sweep} = \left(\frac{162.995ft}{10ft}\right)\left(\frac{1}{8}in\right) = 2.037in$$

4.5.2.3.2 Initial Lateral Eccentricity

Initial lateral eccentricity of center of gravity of girder due to lateral sweep and eccentricity of bunking devices from CL girder

$$e_i = F_o\Delta_{sweep} + e_{bunk} = (0.359)(2.037in) + 1.000in = 1.732in$$

4.5.2.3.3 Lateral Deflection of CG

Lateral deflection of center of gravity due to total weight of girder applied to the weak axis

$$z_o = \frac{W_g}{12E_cI_yL_g^2}\left(\frac{L_s^5}{10} - a^2L_s^3 + 3a^4L_s + \frac{6}{5}a^5\right)$$

$$z_o = \frac{172.48kip}{12(5886.891ksi)(72018.4in^4)(162.995ft)^2}\left(\frac{(135.66ft)^5}{10} - (13.67ft)^2(135.66ft)^3 + 3(13.67ft)^4(135.66ft) + \frac{6}{5}(13.67ft)^5\right)\left(\frac{1728in^3}{1ft^3}\right) = 9.137in$$

Impact up

$$z_o = (0.8)(9.137in) = 7.309in$$

Impact down

$$z_o = (1.2)(9.137in) = 10.964in$$

4.5.2.3.4 Girder Stresses at Harping Point

4.5.2.3.4.1 Stress due to prestressing

$$f_t = \frac{-(1655.95kip + 640.23kip + 163.38kip)}{923.531in^2} + \frac{(-1655.95kip)(31.748in) + (-640.23kip)(30.775in) + (-163.38kip)(-36.343in)}{-19152.5in^3} = 0.800ksi$$

$$f_b = \frac{-(1655.95kip + 640.23kip + 163.38kip)}{923.531in^2} + \frac{(-1655.95kip)(31.748in) + (-640.23kip)(30.775in) + (-163.38kip)(-36.343in)}{20594.85in^3} = -5.883ksi$$

4.5.2.3.4.2 Stress due to girder self-weight (without impact)

$$M_g = \frac{w_g}{2}(L_sx - x^2 - a^2)$$

---

where "x" is measured from the support point, and "a" is the distance to the support point to the end of the girder.

$$x = 0.4L_g - a = 0.4(162.995ft) - 13.67ft = 51.528ft$$

$$M_g = \frac{1.058klf}{2}\left((135.66ft)(51.528ft) - (51.528ft)^2 - (13.67ft)^2\right) = 2195.02k \cdot ft$$

$$f_t = \frac{2195.02k \cdot ft}{-19152.5in^3}\left(\frac{12in}{1ft}\right) = -1.375ksi$$

$$f_b = \frac{2195.02k \cdot ft}{20594.85in^3}\left(\frac{12in}{1ft}\right) = 1.279ksi$$

4.5.2.4 *Analyze normal crown slope, no impact case*

4.5.2.4.1 Equilibrium tilt angle

$$\theta_{eq} = \frac{\left(K_\theta \alpha + (IM)W_g e_i\right)}{K_\theta - (IM)W_g(y_r + z_o)} = \frac{\left(\left(40000\frac{k \cdot in}{rad}\right)\left(0.02\frac{ft}{ft}\right) + (1.0)(172.48kip)(1.732in)\right)}{\left(40000\frac{k \cdot in}{rad}\right) - (1.0)(172.48kip)(86.295in + 9.137in)} = 0.04668\,rad$$

4.5.2.4.2 Stress due to lateral loading from tilt

Top left flange tip

$$f_{tl} = \frac{(IM)\left(M_g\right)\theta_{eq}W_{top}}{2I_y} = \frac{(1.0)(2195.02k \cdot ft)(0.04668)(49in)}{(2)(72018.4in^4)}\left(\frac{12in}{1ft}\right) = 0.418\,ksi$$

Bottom right flange tip

$$f_{br} = -\frac{(IM)\left(M_g\right)\theta_{eq}W_{bot}}{2I_y} = -\frac{(1.0)(2195.02k \cdot ft)(0.04668)(38.375in)}{(2)(72018.4in^4)}\left(\frac{12in}{1ft}\right) = -0.328\,ksi$$

4.5.2.4.3 Factor of Safety against Cracking

Lateral cracking moment

$$f_{direct} = f_{ps} + (IM)f_g = 0.800ksi + (1.0)(-1.375ksi) = -0.575ksi$$

$$M_{cr} = \frac{(f_r - f_{direct})2I_y}{W_{top}} = \frac{\left(0.708ksi - (-0.575ksi)\right)(2)(72018.4in^4)}{49in}\left(\frac{1ft}{12in}\right) = 314.26k \cdot ft$$

Tilt angle at first crack

$$\theta_{cr} = \frac{M_{cr}}{(IM)M_g} \leq 0.4$$

$$\theta_{cr} = \frac{314.26\,k \cdot ft}{(1.0)(2195.02\,k \cdot ft)} = 0.14317\,rad$$

Factor of Safety against Cracking

$$FS_{cr} = \frac{K_\theta(\theta_{cr} - \alpha)}{(IM)W_g[((IM)z_o + y_r)\theta_{cr} + e_i]}$$

$$FS_{cr} = \frac{\left(\left(40000\,\frac{k \cdot in}{rad}\right)\left(0.14317\,rad - 0.02\frac{ft}{ft}\right)\right)}{(1.0)(172.48kip)[((1.0)9.137in + 86.295in)(0.14317rad) + 1.732in]} = 1.86$$

$$FS_{cr} > 1.0\ \mathbf{OK}$$

4.5.2.4.4 Factor of Safety against Failure

$$\theta_{max} = \alpha + \sqrt{\alpha^2 + \frac{e_i + \left((IM)z_o + y_r\right)\alpha}{2.5(IM)z_o}} \leq 0.4\,rad$$

$$\theta_{max} = 0.02\frac{ft}{ft} + \sqrt{\left(0.02\ \frac{ft}{ft}\right)^2 + \frac{1.732in + \left((1.0)(9.137in) + (86.295in)\right)\left(0.02\frac{ft}{ft}\right)}{2.5(1.0)(9.137in)}} = 0.399\ rad$$

$$FS_f = \frac{K_\theta(\theta_{max} - \alpha)}{(IM)W_g[(IM)z_o\theta_{max}(1 + 2.5\theta_{max}) + y_r\theta_{max} + e_i]}$$

$$FS_f = \frac{\left(40000\ \frac{k\cdot in}{rad}\right)\left(0.399 - 0.02\frac{ft}{ft}\right)}{(1.0)(172.48kip)[(1.0)(9.137in)(0.399)\left(1 + 2.5(0.4)\right) + (86.295in)(0.4) + 1.732in]} = 2.023$$

If $FS_f < FS_{cr}, FS_f = FS_{cr}$

$$FS_f = 2.023$$

$$FS_f > 1.5\ \mathbf{OK}$$

4.5.2.4.5 Factor of Safety against Rollover

$$\theta_{ro} = \frac{(IM)W_g\left(\frac{W_{cc}}{2} - H_{rc}\alpha - e_{bunk}\right)}{K_\theta} + \alpha$$

$$\theta_{ro} = \frac{(1.0)(172.48kip)\left(\frac{72in}{2} - (24in)(0.02) - 1.0in\right)}{\left(40000\ \frac{k\cdot in}{rad}\right)} + 0.02 = 0.17316\ rad$$

$$FS_r = \frac{K_\theta(\theta_{ro} - \alpha)}{(IM)W_g[((IM)z_o(1 + 2.5\theta_{ro}) + y_r)\theta_{ro} + e_i]}$$

$$FS_r = \frac{\left(40000\ \frac{k\cdot in}{rad}\right)(0.17316 - 0.02)}{(1.0)(172.48kip)\left[\left((1.0)(9.137in)\left(1 + 2.5(0.17316)\right) + 86.295in\right)(0.17316) + 1.732in\right]} = 1.875$$

$$FS_r > 1.5\ \mathbf{OK}$$

4.5.2.5 *Analyze normal crown slope, impact up*

4.5.2.5.1.1 Equilibrium tilt angle

$$\theta_{eq} = \frac{\left(K_\theta\alpha + (IM)W_g e_i\right)}{K_\theta - (IM)W_g(y_r + z_o)} = \frac{\left(\left(40000\frac{k\cdot in}{rad}\right)\left(0.02\frac{ft}{ft}\right) + (0.8)(172.48kip)(1.732in)\right)}{\left(40000\frac{k\cdot in}{rad}\right) - (0.8)(172.48kip)(86.295in + (0.8)(9.137in))} = 0.03836\ rad$$

4.5.2.5.1.2 Stress due to lateral loading from tilt

Top left flange tip

$$f_{tl} = \frac{(IM)\left(M_g\right)\theta_{eq}W_{top}}{2I_y} = \frac{(0.8)(2195.02k\cdot ft)(0.03836)(49in)}{(2)(72018.4in^4)}\left(\frac{12in}{1ft}\right) = 0.275\ ksi$$

Bottom right flange tip

$$f_{br} = -\frac{(IM)\left(M_g\right)\theta_{eq}W_{bot}}{2I_y} = -\frac{(0.8)(2195.02k\cdot ft)(0.03836)(38.375in)}{(2)(72018.4in^4)}\left(\frac{12in}{1ft}\right) = -0.215\ ksi$$

4.5.2.5.2 Factor of Safety against Cracking

Cracking moment

$$f_{direct} = f_{ps} + (IM)f_g = 0.800ksi + (0.8)(-1.375ksi) = -0.300ksi$$

$$M_{cr} = \frac{(f_r - f_{direct})2I_y}{W_{top}} = \frac{\left(0.708ksi - (-0.300si)\right)(2)(72018.4in^4)}{49in}\left(\frac{1ft}{12in}\right) = 246.88k \cdot ft$$

Tilt angle at first crack

$$\theta_{cr} = \frac{M_{cr}}{(IM)M_g} \leq 0.4$$

$$\theta_{cr} = \frac{246.88\ k \cdot ft}{(0.8)2195.02\ k \cdot ft} = 0.14059\ rad$$

Factor of Safety against Cracking

$$FS_{cr} = \frac{K_\theta(\theta_{cr} - \alpha)}{(IM)W_g[((IM)z_o + y_r)\theta_{cr} + e_i]}$$

$$FS_{cr} = \frac{\left(\left(40000\,\frac{k \cdot in}{rad}\right)\left(0.14059\ rad - 0.02\frac{ft}{ft}\right)\right)}{(0.8)(172.48kip)[((0.8)(9.137in) + 86.295in)(0.14059rad) + 1.732in]} = 2.35$$

$$FS_{cr} > 1.0\ \mathbf{OK}$$

4.5.2.5.3 Factor of Safety against Failure

$$\theta_{max} = \alpha + \sqrt{\alpha^2 + \frac{e_i + \left((IM)z_o + y_r\right)\alpha}{2.5z_o}} \leq 0.4\ rad$$

$$\theta'_{max} = 0.02\frac{ft}{ft} + \sqrt{\left(0.02\ \frac{ft}{ft}\right)^2 + \frac{1.732in + \left((0.8)(9.137in) + 86.295in\right)0.02}{2.5(0.8)(9.317in)}} = 0.46024\ rad \therefore 0.4\ rad$$

$$FS_f = \frac{K_\theta(\theta'_{max} - \alpha)}{(IM)W_g[(IM)z_o\theta'_{max}(1 + 2.5\theta'_{max}) + y_r\theta'_{max} + e_i]}$$

$$FS_f = \frac{\left(40000\,\frac{k \cdot n}{rad}\right)\left(0.4 - 0.02\frac{ft}{ft}\right)}{(0.8)(172.48kip)[(0.8)(9.317in)(0.4)\left(1 + 2.5(0.4)\right) + (86.295in)(0.4) + 1.732in]} = 2.617$$

$$FS_f > 1.5\ \mathbf{OK}$$

4.5.2.5.4 Factor of Safety against Rollover

$$\theta_{ro} = \frac{(IM)W_g\left(\frac{W_{cc}}{2} - H_{rc}\alpha\right)}{K_\theta} + \alpha$$

$$\theta_{ro} = \frac{(0.8)(172.48kip)\left(\frac{72in}{2} - (24in)(0.02)\right)}{\left(40000\,\frac{k-in}{rad}\right)} + 0.02 = 0.14253\ rad$$

$$FS_r = \frac{K_\theta(\theta_{ro} - \alpha)}{(IM)W_g[((IM)z_o(1 + 2.5\theta_{ro}) + y_r)\theta_{ro} + e_i]}$$

$$FS_r = \frac{\left(40000\,\frac{k \cdot in}{rad}\right)(0.14253 - 0.02)}{(0.8)(172.48kip)\left[\left((0.8)(9.317in)\left(1 + 2.5(0.14253)\right) + 86.295in\right)(0.14253) + 1.732in\right]} = 2.30$$

$$FS_r > 1.5\ \mathbf{OK}$$

4.5.2.6 *Analyze normal crown slope, impact down*

4.5.2.6.1.1 Equilibrium tilt angle

$$\theta_{eq} = \frac{\left(K_\theta \alpha + (IM)W_g e_i\right)}{K_\theta - (IM)W_g(y_r + z_o)} = \frac{\left(\left(40000\frac{k\cdot in}{rad}\right)\left(0.02\frac{ft}{ft}\right) + (1.2)(172.48kip)(1.732in)\right)}{\left(40000\frac{k\cdot in}{rad}\right) - (1.2)(172.48kip)(86.295in + (1.2)(9.137in))} = 0.05831\,rad$$

4.5.2.6.1.2 Stress due to lateral loading from tilt

Top left flange tip

$$f_{tl} = \frac{(IM)\left(M_g\right)\theta_{eq}W_{top}}{2I_y} = \frac{(1.2)(2195.02k\cdot ft)(0.05831)(49in)}{(2)(72018.4in^4)}\left(\frac{12in}{1ft}\right) = 0.627\,ksi$$

Bottom right flange tip

$$f_{br} = -\frac{(IM)\left(M_g\right)\theta_{eq}W_{bot}}{2I_y} = -\frac{(1.2)(2195.02k\cdot ft)(0.05831)(38.375in)}{(2)(72018.4in^4)}\left(\frac{12in}{1ft}\right) = -0.491\,ksi$$

4.5.2.6.2 Factor of Safety against Cracking

Cracking moment

$$f_{direct} = f_{ps} + (IM)f_g = 0.800ksi + (1.2)(-1.375ksi) = -0.850ksi$$

$$M_{cr} = \frac{(f_r - f_{direct})2I_y}{W_{top}} = \frac{\left(0.708ksi - (-0.850si)\right)(2)(72018.4in^4)}{49in}\left(\frac{1ft}{12in}\right) = 381.64k\cdot ft$$

Tilt angle at first crack

$$\theta_{cr} = \frac{M_{cr}}{(IM)M_g} \le 0.4$$

$$\theta_{cr} = \frac{381.64\,k\cdot ft}{(1.2)2195.02\,k\cdot ft} = 0.14489\,rad$$

Factor of Safety against Cracking

$$FS_{cr} = \frac{K_\theta(\theta_{cr} - \alpha)}{(IM)W_g[((IM)z_o + y_r)\theta_{cr} + e_i]}$$

$$FS_{cr} = \frac{\left(\left(40000\,\frac{k\cdot in}{rad}\right)\left(0.14489\,rad - 0.02\frac{ft}{ft}\right)\right)}{(1.2)(172.48kip)[((1.2)(9.137in) + 86.295in)(0.14489rad) + 1.732in]} = 1.53$$

$$FS_{cr} > 1.0\ \mathbf{OK}$$

4.5.2.6.3 Factor of Safety against Failure

$$\theta_{max} = \alpha + \sqrt{\alpha^2 + \frac{e_i + \left((IM)z_o + y_r\right)\alpha}{2.5z_o}} \le 0.4\,rad$$

$$\theta'_{max} = 0.02\frac{ft}{ft} + \sqrt{\left(0.02\,\frac{ft}{ft}\right)^2 + \frac{1.732in + \left((1.2)(9.137in) + 86.295in\right)0.02}{2.5(1.2)(9.317in)}} = 0.38683\,rad$$

$$FS_f = \frac{K_\theta(\theta'_{max} - \alpha)}{(IM)W_g[(IM)z_o\theta'_{max}(1 + 2.5\theta'_{max}) + y_r\theta'_{max} + e_i]}$$

$$FS_f = \frac{\left(40000\,\frac{k\cdot n}{rad}\right)\left(0.38683 - 0.02\,\frac{ft}{ft}\right)}{(1.2)(172.48kip)[(1.2)(9.317in)(0.38683)\big(1+2.5(0.38683)\big) + (86.295in)(0.38683) + 1.732in]} = 1.631$$

$$FS_f > 1.5 \textbf{ OK}$$

4.5.2.6.4 Factor of Safety against Rollover

$$\theta_{ro} = \frac{(IM)W_g\left(\frac{W_{cc}}{2} - H_{rc}\alpha\right)}{K_\theta} + \alpha$$

$$\theta_{ro} = \frac{(1.2)(172.48kip)\left(\frac{72in}{2} - (24in)(0.02)\right)}{\left(40000\,\frac{k-in}{rad}\right)} + 0.02 = 0.20380\,rad$$

$$FS_r = \frac{K_\theta(\theta_{ro} - \alpha)}{(IM)W_g[((IM)z_o(1+2.5\theta_{ro}) + y_r)\theta_{ro} + e_i]}$$

$$FS_r = \frac{\left(40000\,\frac{k\cdot in}{rad}\right)(0.20380 - 0.02)}{(1.2)(172.48kip)\big[\big((1.2)(9.317in)\big(1+2.5(0.20380)\big) + 86.295in\big)(0.20380) + 1.732in\big]} = 1.565$$

$$FS_r > 1.5 \textbf{ OK}$$

4.5.2.7 *Analyze at maximum superelevation, no impact*

4.5.2.7.1 Equilibrium tilt angle

$$\theta_{eq} = \frac{\left(K_\theta\alpha + (IM)W_g e_i\right)}{K_\theta - (IM)W_g(y_r + (IM)z_o)} = \frac{\left(\left(40000\frac{k\cdot in}{rad}\right)\left(0.06\,\frac{ft}{ft}\right) + (1.0)(172.48kip)(1.732in)\right)}{\left(40000\frac{k\cdot in}{rad}\right) - (1.0)(172.48kip)\big(86.295in + (1.0)(9.317in)\big)} = 0.11465\,rad$$

4.5.2.7.2 Stress due to lateral loading from tilt

Top left flange tip

$$f_{tl} = \frac{(IM)\big(M_g\big)\theta_{eq}W_{top}}{2I_y} = \frac{(1.0)(2195.02k\cdot ft)(0.11465)(49in)}{(2)(72018.4in^4)}\left(\frac{12in}{1ft}\right) = 1.027\,ksi$$

Bottom right flange tip

$$f_{br} = -\frac{(IM)\big(M_g\big)\theta_{eq}W_{bot}}{2I_y} = -\frac{(1.0)(2195.02k\cdot ft)(0.11465)(38.375in)}{(2)(72018.4in^4)}\left(\frac{12in}{1ft}\right) = -0.856\,ksi$$

4.5.2.7.3 Factor of Safety against Cracking

Cracking moment

$$f_{direct} = f_{ps} + (IM)f_g = 0.800ksi + (1.0)(-1.375ksi) = -0.575ksi$$

$$M_{cr} = \frac{(f_r - f_{direct})2I_y}{W_{top}} = \frac{\big(0.708ksi - (-0.575si)\big)(2)(72018.4in^4)}{49in}\left(\frac{1ft}{12in}\right) = 314.26k\cdot ft$$

Tilt angle at first crack

$$\theta_{cr} = \frac{M_{cr}}{(IM)M_g} \le 0.4$$

$$\theta_{cr} = \frac{314.26\ k \cdot ft}{(1.0)2195.02\ k \cdot ft} = 0.14317\ rad$$

Factor of Safety against Cracking

$$FS_{cr} = \frac{K_\theta(\theta_{cr} - \alpha)}{(IM)W_g[((IM)z_o + y_r)\theta_{cr} + e_i]}$$

$$FS_{cr} = \frac{\left(\left(40000\,\frac{k \cdot in}{rad}\right)\left(0.14317\ rad - 0.06\frac{ft}{ft}\right)\right)}{(1.0)(172.48kip)[((1.0)(9.137in) + 86.295in)(0.14317rad) + 1.732in]} = 1.253$$

$$FS_{cr} > 1.0\ \mathbf{OK}$$

4.5.2.7.4 Factor of Safety against Failure

$$\theta_{max} = \alpha + \sqrt{\alpha^2 + \frac{e_i + \left((IM)z_o + y_r\right)\alpha}{2.5(IM)z_o}} \leq 0.4\ rad$$

$$\theta_{max} = 0.06\frac{ft}{ft} + \sqrt{\left(0.06\ \frac{ft}{ft}\right)^2 + \frac{1.732in + \left((1.0)(9.137in) + (86.295in)\right)\left(0.06\frac{ft}{ft}\right)}{2.5(1.0)(9.137in)}} = 0.634\ rad \therefore 0.4\ rad$$

$$FS_f = \frac{K_\theta(\theta_{max} - \alpha)}{(IM)W_g[(IM)z_o\theta_{max}(1 + 2.5\theta_{max}) + y_r\theta_{max} + e_i]}$$

$$FS_f = \frac{\left(40000\,\frac{k \cdot in}{rad}\right)\left(0.4 - 0.06\frac{ft}{ft}\right)}{(1.0)(172.48kip)[(1.0)(9.137in)(0.4)\left(1 + 2.5(0.4)\right) + (86.295in)(0.4) + 1.732in]} = 1.810$$

$$FS_f > 1.5\ \mathbf{OK}$$

4.5.2.7.5 Factor of Safety against Rollover

$$\theta_{ro} = \frac{(IM)W_g\left(\frac{W_{cc}}{2} - H_{rc}\alpha - e_{bunk}\right)}{K_\theta} + \alpha$$

$$\theta_{ro} = \frac{(1.0)(172.48kip)\left(\frac{72in}{2} - (24in)(0.06) - 1.0in\right)}{\left(40000\,\frac{k \cdot in}{rad}\right)} + 0.06 = 0.20903\ rad$$

$$FS_r = \frac{K_\theta(\theta_{ro} - \alpha)}{(IM)W_g[((IM)z_o(1 + 2.5\theta_{ro}) + y_r)\theta_{ro} + e_i]}$$

$$FS_r = \frac{\left(40000\,\frac{k \cdot in}{rad}\right)(0.20903 - 0.06)}{(1.0)(172.48kip)\left[\left((1.0)(9.137in)\left(1 + 2.5(0.20903)\right) + 86.295in\right)(0.20903) + 1.732in\right]} = 1.52$$

$$FS_r > 1.5\ \mathbf{OK}$$

4.5.3 Check concrete strength

4.5.3.1 *Compression*

Compression stress is limited to $-0.65f_c'$ when tilt is not considered and $-0.70f_c'$ when tilt is considered.

Case	$f_{ps}(ksi)$	IM	$f_g(ksi)$	$f_{direct} = f_{ps} + (IM)f_g\ (ksi)$	$f'_c = \frac{f_{direct}}{0.65}(ksi)$	$f_{tilt}(ksi)$	$f'_c = \frac{f_{direct} + f_{tilt}}{0.70}(ksi)$
2% slope, no impact	-5.886	1.0	1.279	-4.607	7.1	-0.318	7.1
2% slope, impact up	-5.886	0.8	1.279	-4.863	7.5	-0.215	7.3
2% slope, impact down	-5.886	1.2	1.279	-4.351	6.2	-0.491	6.9
6% slope, no impact	-5.886	1.0	1.279	-4.607	7.1	-0.856	7.8 **Controls**

4.5.3.2 *Tension*

Check tension stress limit

Maximum tension stress occurs at harp point top left corner of girder on with superelevated slope of 6%

$$f_t = 0.800ksi - 1.375ksi + 1.027ksi = 0.452\ ksi$$

Stress limit

$$0.24\lambda\sqrt{f'_c} = 0.24(1.0)\sqrt{8.7ksi} = 0.708\ ksi$$

Tension stress is within limit. However, use of this tensile stress limit requires reinforcement sufficient to resist the tensile force in the concrete computed assuming an uncracked section, where reinforcement is proportioned using a stress of $0.5f_y$, not exceeding 30 ksi (LRFD Table 5.9.2.3.1b-1).

4.6 Step 6 – Check Erection Stresses

Evaluate the stress in the girder after the temporary strands are removed and the wet deck is cast. This is the maximum loading condition for the bare girder.

This check is not specified in the AASHTO LRFD BDS. This check is a WSDOT design policy. See WSDOT BDM Table 5.2.1-1

4.6.1 Losses between Transfer to Deck Placement

4.6.1.1 *Temporary strand removal*

Removing the temporary strands changes the state of stress in the girder and causes and additional elastic shortening loss in the permanent strands.

Assuming the temporary strands are removed shortly after erection, the force in the temporary strands at time of removal is

$$P_{tr} = A_t(f_{pj} - \Delta f_{pH})$$

The change of stress in the concrete at the level of the permanent strand due to the removal of the temporary strands is

$$f_{ptr} = -\frac{P_{tr}}{A_g} - \frac{P_{tr}e_te_p}{I_g}$$

The change in stress in the permanent strands is

$$\Delta f_{ptr} = \frac{E_p}{E_c} f_{ptr}$$

At the mid-span section

$$P_{tr} = 4(0.217in^2)(202.5ksi - 14.792ksi) = 162.93\ kip$$

$$f_{ptr} = -\frac{162.93kip}{923.531in^2} - \frac{(162.93kip)(-36.343in)(31.477in)}{734356.0in^4} = 0.077ksi$$

$$\Delta f_{ptr} = \frac{28500ksi}{5886.891ksi}(0.077ksi) = 0.375\ ksi$$

4.6.1.2 *Shrinkage of Girder Concrete*

$$\Delta f_{pSR} = \varepsilon_{bid} E_p K_{id}$$

$$\varepsilon_{bid} = k_s k_{hs} k_f k_{td} 0.48 \times 10^{-3}$$

$$K_{id} = \frac{1}{1 + \frac{E_p}{E_{ci}} \frac{A_{ps}}{A_g}\left(1 + \frac{A_g e\ e_p}{I_g}\right)\left[1 + 0.7\psi_b(t_f, t_i)\right]}$$

$$\psi_b(t_f, t_i) = 1.9 k_s k_{hc} k_f k_{td} t_i^{-0.118}$$

$$k_s = 1.45 - 0.13\left(\frac{V}{S}\right) \geq 1.0 = 1.04$$

$$k_{hs} = 2.00 - 0.014H = 0.95$$

$$k_{hc} = 1.56 - 0.008H = 0.96$$

$$k_f = \frac{1}{1 + f'_{ci}} = 0.61$$

$$k_{td} = \frac{t}{12\left(\frac{100 - 4f'_{ci}}{f'_{ci} + 20}\right) + t} = \begin{matrix} 0.791\ with\ t = (t_d - t_i) = 119\ day \\ 0.985\ with\ t = (t_f - t_i) = 1999\ day \end{matrix}$$

$$t_i = 1\ day$$

$$t_d = 120\ day$$

$$t_f = 2000\ day$$

$$\varepsilon_{bid} = (1.04)(0.95)(0.61)(0.791)(0.48 \times 10^{-3}) = 0.000228$$

$$\psi_b(t_f, t_i) = 1.9(1.04)(0.96)(0.61)(0.985)(1)^{-0.118} = 1.135$$

$$K_{id} = \frac{1}{1 + \left(\frac{28500ksi}{5530.5ksi}\right)\left(\frac{14.105in^2}{923.531in^2}\right)\left(1 + \frac{(923.531in^2)(27.304in)(31.477in)}{734356.0in^4}\right)\left(1 + 0.7(1.135)\right)} = 0.773$$

$$\Delta f_{pSR} = (0.000228)(28500ksi)(0.773) = 5.022\ ksi$$

4.6.1.3 *Creep of Girder Concrete*

$$\Delta f_{pCR} = \frac{E_p}{E_{ci}} f_{cgp} \psi_b(t_d, t_i) K_{id}$$

$$\psi_b(t_d, t_i) = 1.9(1.04)(0.96)(0.61)(0.791)(1)^{-0.118} = 0.912$$

$$\Delta f_{pCR} = \frac{28500ksi}{5530.5ksi}(3.945ksi)(0.912)(0.773) = 14.327\ ksi$$

4.6.1.4 *Relaxation of Prestressing Strands*

$$\Delta f_{pR1} = \left[\frac{f_{pt}}{K_L'}\frac{log\ (24t_d)}{log(24t_i)}\left(\frac{f_{pt}}{f_{py}} - 0.55\right)\right]\left[1 - \frac{3(\Delta f_{pSR} + \Delta f_{pCR})}{f_{pt}}\right]K_{id}$$

$$f_{pt} = f_{pj} - \Delta f_{pR0} - \Delta f_{pES} = 202.5ksi - 1.98ksi - 20.328ksi = 180.193ksi$$

$$\Delta f_{pR1} = \left[\frac{180.193\ ksi}{45}\frac{log\ (24 \cdot 120)}{log\ (24 \cdot 1)}\left(\frac{180.193ksi}{243ksi} - 0.55\right)\right]\left[1 - \frac{3(5.022ksi + 14.327ksi)}{180.193\ ksi}\right](0.773) = 1.007\ ksi$$

4.6.1.5 *Time dependent losses*

$$\Delta f_{pLT_{id}} = \Delta f_{pSR} + \Delta f_{pCR} + \Delta f_{pR1}$$

$$\Delta f_{pLT_{id}} = 5.022ksi + 14.327ksi + 1.007ksi = 20.355\ ksi$$

4.6.1.6 *Elastic gains*

Added dead load on noncomposite section

$$M_{adl} = M_{diaphragm} + M_{slab} + M_{haunch}$$

$$M_{adl} = 140.17k \cdot ft + 2465.61k \cdot ft + 760.28k \cdot ft = 3366.05k \cdot ft$$

$$\Delta f_{cd}' = \frac{M_{adl}e}{I_g}$$

$$\Delta f_{cd}' = (3366.05k \cdot ft)\left(\frac{12in}{1ft}\right)\left(\frac{31.477in}{734356.0in^4}\right) = 1.731\ ksi$$

$$\Delta f_{pED} = \frac{E_p}{E_c}\Delta f_{cd}'$$

$$\Delta f_{pED} = \left(\frac{28500ksi}{5886.891ksi}\right)(1.731ksi) = 8.382\ ksi$$

4.6.2 Stresses

Effective prestress

$$P = A_{ps}(f_{pj} - \Delta f_{pR0} - \Delta f_{pES} - \Delta f_{pLT_{id}} - \Delta f_{ptr} + \Delta f_{pED})$$

$$P = 13.237in^2(202.5ksi - 1.98ksi - 20.328ksi - 20.355ksi - 0.375ksi + 8.382ksi) = 2221.8\ kip$$

Stress in girder due to effective prestress

$$f_{ps} = \frac{P}{A} + \frac{Pe}{S}$$

$$f_t = \frac{-2221.8kip}{923.531in^2} + \frac{(-2221.8kip)(31.447in)}{-19152.5in^3} = 1.246ksi$$

$$f_b = \frac{-2221.8kip}{923.531in^2} + \frac{(-2221.8kip)(31.447in)}{20594.8in^3} = -5.801ksi$$

Stress due to loading

$$f = \frac{M_{girder} + M_{diaphragm} + M_{slab} + M_{haunch}}{S}$$

$$f_t = \frac{(3368.43k \cdot ft + 140.17k \cdot ft + 2465.61k \cdot ft + 760.28k \cdot ft)}{-19152.5in^3}\left(\frac{12in}{1ft}\right) = -4.219\ ksi$$

$$f_b = \frac{(3368.43k \cdot ft + 140.17k \cdot ft + 2465.61k \cdot ft + 760.28k \cdot ft)}{20594.8in^3}\left(\frac{12in}{1ft}\right) = 3.924\ ksi$$

Stress Limits

Compression

$$-0.45f_c' = -0.45(8.7ksi) = -3.915ksi$$

Tension

$$0.19\lambda\sqrt{f_c'} = 0.19(1.0)\sqrt{8.7\ ksi} = 0.560ksi$$

Stress Demand

$$f_t = 1.246ksi - 4.219ksi = -2.974\ ksi$$

$$f_b = -5.801ksi + 3.924ksi = -1.877\ ksi$$

Stresses at mid-span satisfy the limit state.

These calculations are repeated at the point of prestress transfer. The results are

$$f_t = -0.648\ ksi$$

$$f_b = -3.892\ ksi$$

The required concrete strength is

$$-0.45f_c' = -3.892ksi$$

$$f_c' = 8.65\ ksi$$

This is the overall governing 28-day design concrete strength.

4.7 Step 7 – Check Final Conditions

4.7.1 Losses from Deck Placement to Final

4.7.1.1 *Shrinkage of Girder Concrete*

$$\Delta f_{pSD} = \varepsilon_{bdf} E_p K_{df}$$

$$\varepsilon_{bdf} = \varepsilon_{bif} - \varepsilon_{bid}$$

$$\varepsilon = k_s k_{hs} k_f k_{td} 0.48 \times 10^{-3}$$

$$K_{df} = \frac{1}{1 + \frac{E_p}{E_{ci}} \frac{A_{ps}}{A_c}\left(1 + \frac{A_c e_c^2}{I_c}\right)\left[1.0 + 0.7\psi_b(t_f, t_i)\right]}$$

From before

$$k_s = 1.04$$

$$k_{hs} = 0.95$$

$$k_{hc} = 0.96$$

$$k_f = 0.61$$

$$\psi_b(t_f, t_i) = 1.135$$

$$\varepsilon_{bid} = 0.000228$$

$$k_{td}(t = t_f - t_i) = 0.985$$

$$\varepsilon_{bif} = (1.04)(0.95)(0.61)(0.985)(0.48 \times 10^{-3}) = 0.000284$$

$$\varepsilon_{bdf} = 0.000284 - 0.000228 = 0.000056$$

$$e_c = e + y_{bc} - y_b = 31.477in + 48.867in - 35.657in = 44.687in$$

$$K_{df} = \frac{1}{1 + \left(\frac{28500ksi}{5530.5ksi}\right)\left(\frac{13.237in^2}{1349.614in^2}\right)\left(1 + \frac{(1349.614in^2)(44.687in)^2}{1246570.6in^4}\right)\left(1 + 0.7(1.135)\right)} = 0.777$$

$$\Delta f_{pSD} = (0.000056)(28500ksi)(0.777) = 1.234\ ksi$$

4.7.1.2 *Creep of Girder Concrete*

$$\Delta f_{pCD} = \frac{E_p}{E_{ci}} f_{cgp}\left[\psi_b(t_f, t_i) - \psi_b(t_d, t_i)\right]K_{df} + \frac{E_p}{E_c}(\Delta f_{cd})\psi_b(t_f, t_d)K_{df}$$

$$\Delta f_{cd} = -\left(\Delta f_{pSR} + \Delta f_{pCR} + \Delta f_{pR1}\right)\left(\frac{A_{ps}}{A_g}\right)\left(1 + \frac{A_g e^2}{I_g}\right) - (\Delta f'_{cd} + \Delta f''_{cd})$$

$$\Delta f'_{cd} = \frac{M_{adl}e}{I_g} = 1.731\ ksi$$

$$\Delta f''_{cd} = \frac{M_{sidl}\left(Y_{bc} - Y_{bg} + e\right)}{I_c}$$

$$M_{sidl} = M_{barrier} + M_{overlay}$$

$$M_{sidl} = 732.83k \cdot ft + 739.63k \cdot ft = 1471.75k \cdot ft$$

$$\Delta f''_{cd} = \frac{(1471.75k \cdot ft)(48.867in - 35.657in + 31.477in)}{1246570.6in^4}\left(\frac{12in}{1ft}\right) = 0.633ksi$$

$$\Delta f_{cd} = -(5.022 + 14.732 + 1.007\ ksi)\left(\frac{14.105in^2}{923.531in^3}\right)\left(1 + \frac{(923.531in^2)(31.477in)^2}{734356.0in^4}\right) - (1.731ksi + 0.633ksi)$$
$$= -3.020\ ksi$$

$$k_{td} = \frac{t}{12\left(\frac{100 - 4f'_{ci}}{f'_{ci} + 20}\right) + t} = 0.984\ with\ t = \left(t_f - t_d\right) = 2000 - 120 = 1880\ day$$

$$\psi_b(t_f, t_d) = 1.9(1.04)(0.96)(0.61)(0.984)(120)^{-0.118} = 0.644$$

$$\Delta f_{pCD} = \left(\frac{28500ksi}{5530.5ksi}\right)(3.945ksi)(1.135 - 0.912)(0.777) + \left(\frac{28500ksi}{5886.891ksi}\right)(-3.020ksi)(0.644)(0.777) = -2.892\ ksi$$

4.7.1.3 *Relaxation of Prestressing Strands*

$$\Delta f_{pR2} = \Delta f_{pR1} = 1.007\ ksi$$

4.7.1.4 *Shrinkage of Deck Concrete*

$$\Delta f_{pSS} = \frac{E_p}{E_c}\Delta f_{cdf}K_{df}\left[1 + 0.7\psi_b(t_f, t_d)\right]$$

$$\Delta f_{cdf} = \frac{\varepsilon_{ddf}A_d E_{c\ deck}}{\left[1 + 0.7\psi_d(t_f, t_d)\right]}\left(\frac{1}{A_c} - \frac{e_c\ e_d}{I_c}\right)$$

$$\Delta f_{cdf} = \frac{(-0.000265)(681.165in^2)(4266.223ksi)}{1 + 0.7(2.12)}\left(\frac{1}{1349.614in^2} - \frac{(44.687in)(28.883in)}{1246570.6in^4}\right) = 0.091\ ksi$$

$$\Delta f_{pSS} = \left(\frac{28500ksi}{5886.891ksi}\right)(0.091ksi)(0.777)\left(1 + 0.7(0.644)\right) = 0.498\ ksi$$

4.7.1.5 *Time Dependent Losses*

$$\Delta f_{pLT_{df}} = \Delta f_{pSD} + \Delta f_{pCD} + \Delta f_{pR1} - \Delta f_{pSS} = 1.234ksi - 2.892ksi + 1.007ksi - 0.498ksi = -1.149\ ksi$$

$$\Delta f_{pLT} = \Delta f_{pLT_{id}} + \Delta f_{pLT_{df}} = 20.355ksi - 1.149ksi = 19.206ksi$$

$$\Delta f_{pT} = \Delta f_{pR0} + \Delta f_{pES} + f_{ptr} + \Delta f_{pLT} - \Delta f_{pED} - \Delta f_{pSIDL}$$
$$= 1.98ksi + 20.328ksi + 0.375ksi + 19.206ksi - 8.382ksi - 3.065ksi = 30.441ksi$$

4.7.1.6 *Elastic Gains*

4.7.1.6.1 Superimposed dead loads

$$\Delta f_{pSIDL} = \frac{E_p}{E_c}\Delta f''_{cd} = \left(\frac{28500ksi}{5886.891ksi}\right)(0.633ksi) = 3.065\ ksi$$

4.7.1.6.2 Live Loads

$$\Delta f_{pLL} = \frac{E_P}{E_c}\Delta f'''_{cd}$$

$$\Delta f'''_{cd} = \frac{M_{llim}(Y_{bc} - Y_{bg} + e)}{I_c}$$

$$\Delta f'''_{cd} = \begin{cases} \dfrac{(3804.05k \cdot ft)(48.867in - 35.657in + 31.477in)}{1243570.6in^4}\left(\dfrac{12in}{1ft}\right) = 1.636\ ksi\ (Design\ Live\ Load) \\ \dfrac{(1863.4k \cdot ft)(48.867in - 35.657in + 31.477in)}{1243570.6in^4}\left(\dfrac{12in}{1ft}\right) = 0.802\ ksi\ (Fatigue\ Live\ Load) \end{cases}$$

$$\Delta f_{pLL} = \begin{cases} \left(\dfrac{28500ksi}{5886.891ksi}\right)(1.636ksi) = 7.922ksi\ (Design\ Live\ Load) \\ \left(\dfrac{28500ksi}{5886.891ksi}\right)(0.802ksi) = 3.881ksi\ (Fatigue\ Live\ Load) \end{cases}$$

4.7.2 Stresses

4.7.2.1 *Final Stresses without Live Load*

This analysis is for the Service I limit state.

Effective Prestress

$$P_{nc} = A_{ps}(f_{pj} - \Delta f_{pR0} - \Delta f_{pES} - \Delta f_{ptr} - \Delta f_{pLT_{id}} + \Delta f_{pED})$$

$$P_{nc} = 13.237in^2(202.5ksi - 1.98ksi - 20.328ksi - 0.375ksi - 20.335ksi + 8.382ksi) = (13.237in^2)(167.864ksi)$$
$$= 2222.0\ kip$$

$$P_c = A_{ps}\left(-\Delta f_{pLT_{df}} + \Delta f_{pSIDL}\right)$$

$$P_c = (13.237in^2)(-(-1.149ksi) + 3.065ksi) = (13.127in^2)(4.214ksi) = 55.3\ kip$$

Stress in girder due to effective prestress

$$f_{ps} = \frac{P_{nc}}{A} + \frac{P_{nc}e}{S} + \frac{P_c}{A_c} + \frac{P_c e_c}{S_c}$$

$$f_t = \frac{-2222.0kip}{923.531in^2} + \frac{(-2222.0kip)(31.477in)}{-19152.5in^3} + \frac{-55.3kip}{1349.914in^2} + \frac{(-55.3kip)(44.687in)}{-49599.7in^3} = 1.255ksi$$

$$f_b = \frac{-2222.0kip}{923.531in^2} + \frac{(-2222.0kip)(31.477in)}{20594.8in^3} + \frac{-55.3kip}{1349.914in^2} + \frac{(-55.3kip)(44.687in)}{25509.3in^3} = -5.940ksi$$

Stress due to loading

$$f = \frac{(M_{girder} + M_{diaphragm} + M_{slab} + M_{haunch})}{S} + \frac{(M_{barrier} + M_{overlay})}{S_c} + f_{ss}$$

$$f_t = \frac{(3368.43 + 140.17 + 2465.61 + 760.28k \cdot ft)}{-19152.5in^3}\left(\frac{12in}{1ft}\right) + \frac{(732.12 + 739.63k \cdot ft)}{-49599.7in^3}\left(\frac{12in}{1ft}\right) - 0.410ksi$$
$$= -4.986\ ksi$$

$$f_b = \frac{(3368.43 + 140.17 + 2465.61 + 760.28k \cdot ft)}{20594.8in^3}\left(\frac{12in}{1ft}\right) + \frac{(732.12 + 0.0k \cdot ft)}{25509.3in^3}\left(\frac{12in}{1ft}\right) + 0.121ksi = 4.390\ ksi$$

This limit state evaluation is for compression stress. Minimize the stress at the bottom of the girder by considering the case before future overlay installation.

Stress Limits

Compression

$$-0.45f_c' = -0.45(8.7ksi) = -3.915ksi$$

Stress Demand

$$f_t = 1.255ksi - 4.986ksi = -3.731\ ksi$$

Stresses satisfy the limit state criteria.

4.7.2.2 *Final Stresses with Live Load*

4.7.2.2.1 Service I Limit State

This is a compression stress limit state.

Effective Prestress with Service I live load

$$P_{nc} = A_{ps}\left(f_{pj} - \Delta f_{pR0} - \Delta f_{pES} - \Delta f_{ptr} - \Delta f_{pLT_{id}} + \Delta f_{pED}\right)$$

$$P_{nc} = 13.237in^2(202.5ksi - 1.98ksi - 20.328ksi - 0.375ksi - 20.335ksi + 8.382ksi) = (13.237in^2)(167.864ksi)$$
$$= 2222.0\ kip$$

$$P_c = A_{ps}\left(-\Delta f_{pLT_{df}} + \Delta f_{pSIDL} + \Delta f_{pLL}\right)$$

$$P_c = (13.237in^2)(-(-1.149ksi) + 3.065ksi + 7.922\ ksi) = (13.237in^2)(12.136ksi) = 160.6\ kip$$

Stress in girder due to effective prestress

$$f_{ps} = \frac{P_{nc}}{A} + \frac{P_{nc}e}{S} + \frac{P_c}{A_c} + \frac{P_c e_c}{S_c}$$

$$f_t = \frac{-2222.0kip}{923.531in^2} + \frac{(-2222.0kip)(31.477in)}{-19152.5in^3} + \frac{-160.6kip}{1349.914in^2} + \frac{(-160.6kip)(44.687in)}{-49599.7in^3} = 1.272ksi$$

Stress due to loading

$$f = \frac{(M_{girder} + M_{diaphragm} + M_{slab} + M_{haunch})}{S} + \frac{(M_{barrier} + M_{overlay} + M_{llim})}{S_c} + f_{ss}$$

$$f_t = \frac{(3368.43 + 140.17 + 2465.61 + 760.28k \cdot ft)}{-19152.5in^3}\left(\frac{12in}{1ft}\right) + \frac{(732.12 + 739.63 + 3804.05k \cdot ft)}{-49599.7in^3}\left(\frac{12in}{1ft}\right) - 0.410ksi$$
$$= -5.906\ ksi$$

This limit state evaluation is for compression stress. Minimize the stress at the bottom of the girder by considering the case before future overlay installation and live load not on the structure.

Stress Limits

Compression

$$-0.6f_c' = -0.6(8.7ksi) = -5.220ksi$$

Stress Demand

$$f_t = (1.272ksi - 5.906ksi) = -4.634\ ksi$$

Stresses are within limits

4.7.2.2.2 Service III Limit State

This is a tension stress limit state.

Effective Prestress with Service III live load

$$P_{nc} = A_{ps}(f_{pj} - \Delta f_{pR0} - \Delta f_{pES} - \Delta f_{ptr} - \Delta f_{pLT_{id}} + \Delta f_{pED})$$

$$P_{nc} = 13.237in^2(202.5ksi - 1.98ksi - 20.328ksi - 0.375ksi - 20.335ksi + 8.382ksi) = (13.237in^2)(167.864ksi)$$
$$= 2222.0\ kip$$

$$P_c = A_{ps}\left(-\Delta f_{pLT_{df}} + \Delta f_{pSIDL} + 0.8\Delta f_{pLL}\right)$$

$$P_c = (13.237in^2)(-(-1.149ksi) + 3.065ksi + (0.8)7.922\ ksi) = (13.237in^2)(10.55ksi) = 139.7\ kip$$

Stress in girder due to effective prestress

$$f_{ps} = \frac{P_{nc}}{A} + \frac{P_{nc}e}{S} + \frac{P_c}{A_c} + \frac{P_c e_c}{S_c}$$

$$f_b = \frac{-2222.0kip}{923.531in^2} + \frac{(-2222.0kip)(31.477in)}{20594.8in^3} + \frac{-139.7kip}{1349.914in^2} + \frac{(-139.7.4kip)(44.687in)}{25509.3in^3} = -6.15ksi$$

Stress due to loading

$$f = \frac{(M_{girder} + M_{diaphragm} + M_{slab} + M_{haunch})}{S} + \frac{(M_{barrier} + M_{overlay} + 0.8M_{llim})}{S_c} + f_{ss}$$

$$f_b = \frac{(3368.43\ k\cdot ft + 140.17\ k\cdot ft + 2465.61k\cdot ft\ + 760.28\ k\cdot ft)}{20594.8in^3}\left(\frac{12in}{1ft}\right) + \frac{(732.12\ k\cdot ft + 0.0\ k\cdot ft + (0.8)3804.05k\cdot ft)}{25509.3in^3}\left(\frac{12in}{1ft}\right) + 0.121ksi = 6.169\ ksi$$

Stress Limits

The tension stress limit is 0.0 ksi per WSDOT BDM

Stress Demand

$$f_t = (-6.147ksi + 6.169ksi) = 0.022\ ksi \approx 0ksi$$

Stresses are within limits

Check the assumed effective prestress of 85% (15% loss).

$$\frac{f_{pe}}{f_{pj}} = \frac{178.397}{202.5} = 0.88 = 88\% \approx 85\%$$

$$Loss = 1 - \frac{f_{pe}}{f_{pj}} = 1 - 0.88 = 0.12 = 12\% \approx 15\%$$

4.7.2.2.3 Fatigue I Limit State

Effective Prestress with Fatigue I live load

$$P = A_{ps}\left(f_{pj} - \Delta f_{pR0} - \Delta f_{pES} - \Delta f_{ptr} - \Delta f_{pLT} + \Delta f_{pED} + \Delta f_{pSIDL} + 1.5\Delta f_{pLL}\right)$$

$$P = 13.237in^2(202.5ksi - 1.98ksi - 20.328ksi - 0.375ksi - 19.206ksi + 8.382ksi + 3.065ksi + (1.5)3.881\ ksi) = (13.237in^2)(177.88ksi) = 2354.6\ kip$$

$$P_{nc} = A_{ps}\left(f_{pj} - \Delta f_{pR0} - \Delta f_{pES} - \Delta f_{ptr} - \Delta f_{pLT_{id}} + \Delta f_{pED}\right)$$

$$P_{nc} = 13.237in^2(202.5ksi - 1.98ksi - 20.328ksi - 0.375ksi - 20.335ksi + 8.382ksi) = (13.237in^2)(167.864ksi) = 2222.0\ kip$$

$$P_c = A_{ps}\left(-\Delta f_{pLT_{df}} + \Delta f_{pSIDL} + 1.5\Delta f_{pLL}\right)$$

$$P_c = (13.237in^2)(-(-1.149ksi) + 3.065ksi + (1.5)3.881\ ksi) = (13.237in^2)(10.036ksi) = 132.8\ kip$$

Stress in girder due to effective prestress

$$f_{ps} = \frac{P_{nc}}{A} + \frac{P_{nc}e}{S} + \frac{P_c}{A_c} + \frac{P_c e_c}{S_c}$$

$$f_t = \frac{-2222.0kip}{923.531in^2} + \frac{(-2222.0kip)(31.477in)}{-19152.5in^3} + \frac{-132.8kip}{1349.914in^2} + \frac{(-132.8kip)(44.687in)}{-49599.7in^3} = 1.267ksi$$

Stress due to loading

$$f = \frac{0.5(M_{girder} + M_{diaphragm} + M_{slab} + M_{haunch})}{S} + \frac{0.5\left(M_{barrier} + M_{overlay}\right)}{S_c} + 0.5f_{ss} + \frac{1.5M_{LLIM}}{S_c}$$

$$f_t = \frac{0.5(3368.43 + 140.17 + 2465.61 + 760.28k\cdot ft)}{-19152.5in^3}\left(\frac{12in}{1ft}\right) + \frac{0.5(732.12 + 739.63k\cdot ft)}{-49599.7in^3}\left(\frac{12in}{1ft}\right) + (0.5)(-0.410ksi) + \frac{1.5(1863.4k\cdot ft)}{-49599.7in^3}\left(\frac{12in}{1ft}\right) = -3.282\ ksi$$

Stress Demand

$$f_t = 0.5(1.267\ ksi) - 3.282ksi = -2.648\ ksi$$

Stress limit

$$-0.4f_c' = -0.4(8.7ksi) = -3.480ksi$$

Stresses are within limits

4.7.3 Moment Capacity

4.7.3.1 *Compute Nominal Moment Capacity at 0.5L$_g$.*

Strength I limit state

$$Strength\ I = 1.25DC + 1.5DW + 1.75(LL + IM)$$

$$M_u = 1.25(3368.43 + 140.17 + 2465.61 + 760.28 + 732.12) + 1.50(739.63) + 1.75(3804.05) = 17099.8k \cdot ft$$

$$c = \frac{A_{ps}f_{pu} - \alpha_1 f_c'(b - b_w)h_f}{\alpha_1 f_c'\beta_1 b_w + kA_{ps}\frac{f_{pu}}{d_p}}$$

$$k = 2\left(1.04 - \frac{f_{py}}{f_{pu}}\right) = 2\left(1.04 - \frac{243}{270}\right) = 0.28$$

$$f_{ps} = f_{pu}\left(1 - k\frac{c}{d_p}\right)$$

$$\alpha_1 = 0.85$$

$$d_p = Y_t + e + t_s = 38.343in + 31.477in + 7in = 76.82in$$

$$c = \frac{(13.237in^2)(270ksi) - 0.85(4ksi)(84in - 6.125in)(7in)}{0.85(4ksi)(0.85)(6.125in) + (0.28)(13.237in^2)\left(\frac{270ksi}{76.82in}\right)} = \frac{1720.565kip}{17.7\frac{k}{in} + 13.0\frac{k}{in}} = 56.04in$$

$$f_{ps} = 270ksi\left(1 - 0.28\frac{56.04in}{76.82in}\right) = 214.85ksi$$

$$a = \beta_1 c = 0.85(56.04in) = 47.63in$$

$$M_n = A_{ps}f_{ps}\left(d_p - \frac{a}{2}\right) + \alpha_1 f_c'(b - b_w)h_f\left(\frac{a}{2} - \frac{h_f}{2}\right)$$

$$M_n = (13.237in^2)(214.85ksi)\left(76.82in - \frac{47.63in}{2}\right) + 0.85(4ksi)(84in - 6.125in)(7in)\left(\frac{47.63in}{2} - \frac{7in}{2}\right)$$
$$= 188396.9k \cdot in = 15699.7k \cdot ft$$

$$d_t = 74in + 7in - 2in = 79in$$

$$\varepsilon_t = 0.003\frac{d_t - c}{c} = 0.003\frac{79 - 56.04}{56.04} = 0.00123$$

$$0.75 \le \phi = 0.75 + 0.25\frac{(\varepsilon_t - \varepsilon_{cl})}{(\varepsilon_{tl} - \varepsilon_{cl})} \le 1.0$$

$$\phi = 0.75 + \frac{0.25(0.00123 - 0.002)}{(0.005 - 0.002)} = 0.686, use\ 0.75$$

$$M_r = \phi M_n = 0.75(15699.7k \cdot ft) = 11774.8k \cdot ft$$

$$M_r < M_u \textbf{ No Good}$$

The AASHTO method for computing moment capacity does not account for the large compression flange in the girder or the higher strength of the girder concrete. See Reference 7 for more information. PGSuper uses strain compatibility analysis to compute the moment capacity.

Stress-strain relationship for prestressing strands:

$$f_{ps} = \varepsilon_{ps}\left[877 + \frac{27{,}613}{\left(1 + \left(112.4\varepsilon_{ps}\right)^{7.36}\right)^{\frac{1}{7.36}}}\right] \leq 270ksi$$

Stress-strain relationship for concrete:

$$f_c = f_c' \frac{n\left(\frac{\varepsilon_{cf}}{\varepsilon_c'}\right)}{n - 1 + \left(\frac{\varepsilon_{cf}}{\varepsilon_c'}\right)^{nk}}$$

where

$$n = 0.8 + \frac{f_c'}{2500}$$

$$k = 0.67 + \frac{f_c'}{9000}$$

$$if\ \frac{\varepsilon_{cf}}{\varepsilon_c'} < 1.0, k = 1.0$$

$$E_c = \frac{40{,}000\sqrt{f_c'} + 1{,}000{,}000}{1000}$$

$$\varepsilon_c' x1000 = \frac{f_c'}{E_c}\frac{n}{n-1}$$

Effective prestress, $f_{pe} = f_{pj} - \Delta f_{pT} = 202.5ksi - 30.441ksi = 172.059ksi$

Initial strain in prestressing strand, sometimes referred to as the decompression strain, is, $\varepsilon_{psi} = \frac{f_{pe}}{E_p} = \frac{172.059ksi}{28500ksi} = 6.037x10^{-3}$

Discretize the composite girder section into "slices". Compute the strain at the centroid of each slice. The stress in the slice is determined from the stress-strain relationship for the slice material. Finally, compute the axial force and moment contribution for each slice. Sum the contribution of each slice to determine the capacity of the section.

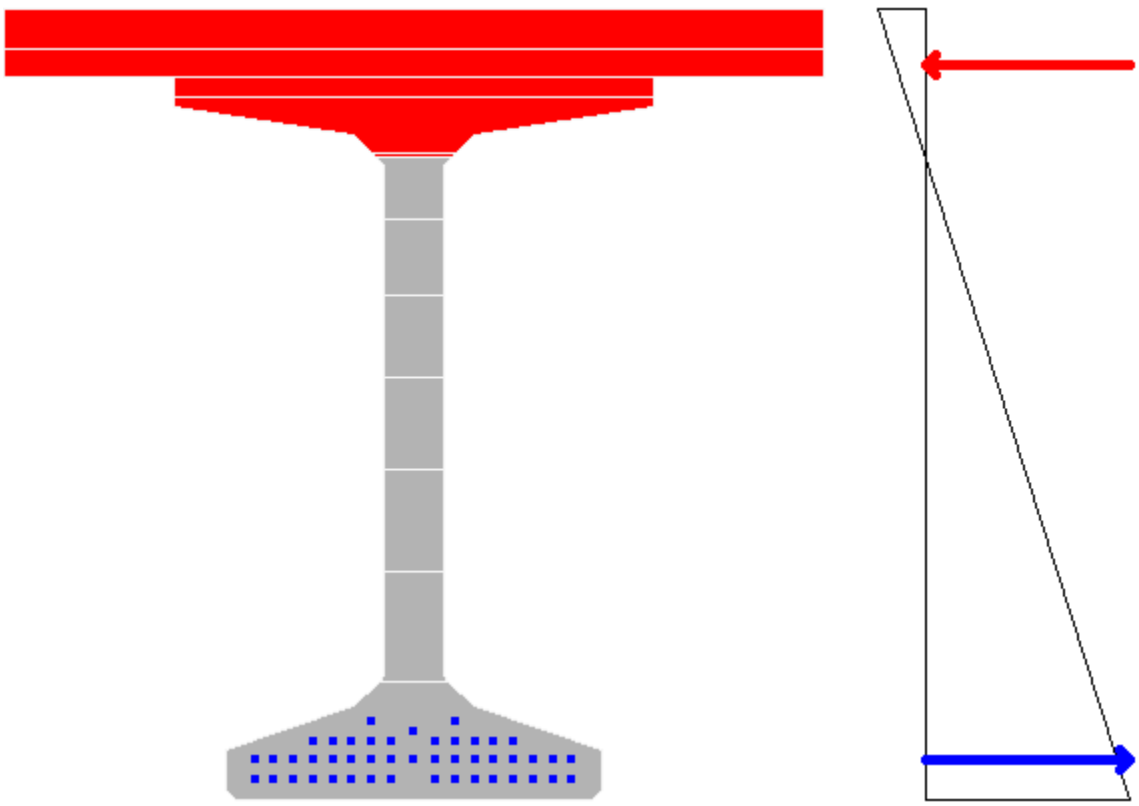

Figure 4-9: Discretized Girder Section for Strain Compatibility Analysis

Table 4-1: Strain compatibility analysis details

Slice	Piece	Area (in2)	Ytop (in)	Ybot (in)	Ycg (in)	fpe (KSI)	Initial Strain	Incremental Strain	Total Strain	Stress (Fg - Bg) (KSI)	dF = (Area)(Stress) (kip)	dM = (dF)(Ycg) (kip-ft)
1	Deck	340.168	7.000	2.950	4.975		0	-0.00259832	-0.00259832	-3.590	-1221.16	-506.27
2	Deck	247.777	2.950	0.000	1.475		0	-0.00190406	-0.00190406	-3.999	-990.83	-121.79
3	Girder	98.000	0.000	-2.000	-1.000		0	-0.00141312	-0.00141312	-6.481	-635.09	52.92
4	Girder	159.696	-2.000	-7.850	-3.995		0	-0.000818991	-0.000818991	-3.863	-616.87	205.38
5	Girder	2.233	-7.850	-8.124	-7.985		0	-2.748e-05	-2.748e-05	-0.130	-0.29	0.19
6	Girder	40.433	-8.124	-14.600	-11.306		0	0.000631199	0.000631199	0.000	0.00	0.00
7	Girder	46.856	-14.600	-22.250	-18.425		0	0.00204331	0.00204331	0.000	0.00	0.00
8	Girder	52.369	-22.250	-30.800	-26.525		0	0.00365003	0.00365003	0.000	0.00	0.00
9	Girder	57.881	-30.800	-40.250	-35.525		0	0.00543527	0.00543527	0.000	0.00	0.00
10	Girder	63.394	-40.250	-50.600	-45.425		0	0.00739903	0.00739903	0.000	0.00	0.00
11	Girder	69.132	-50.600	-61.850	-56.243		0	0.00954486	0.00954486	0.000	0.00	0.00
12	Straight Strand 44	0.217	-66.000	-66.000	-66.000	172.059	0.00603715	0.0114803	0.0175174	260.978	56.63	-311.48
13	Straight Strand 43	0.217	-66.000	-66.000	-66.000	172.059	0.00603715	0.0114803	0.0175174	260.978	56.63	-311.48
14	Harped Strand 15	0.217	-67.000	-67.000	-67.000	172.059	0.00603715	0.0116787	0.0177158	261.172	56.67	-316.43
15	Harped Strand 14	0.217	-67.000	-67.000	-67.000	172.059	0.00603715	0.0116787	0.0177158	261.172	56.67	-316.43
16	Harped Strand 13	0.217	-67.000	-67.000	-67.000	172.059	0.00603715	0.0116787	0.0177158	261.172	56.67	-316.43
17	Harped Strand 16	0.217	-67.000	-67.000	-67.000	172.059	0.00603715	0.0116787	0.0177158	261.172	56.67	-316.43
18	Harped Strand 17	0.217	-67.000	-67.000	-67.000	172.059	0.00603715	0.0116787	0.0177158	261.172	56.67	-316.43
19	Straight Strand 35	0.217	-68.000	-68.000	-68.000	172.059	0.00603715	0.011877	0.0179142	261.364	56.72	-321.39
20	Straight Strand 34	0.217	-68.000	-68.000	-68.000	172.059	0.00603715	0.011877	0.0179142	261.364	56.72	-321.39
21	Straight Strand 37	0.217	-68.000	-68.000	-68.000	172.059	0.00603715	0.011877	0.0179142	261.364	56.72	-321.39

Slice	Piece	Area (in2)	Ytop (in)	Ybot (in)	Ycg (in)	fpe (KSI)	Initial Strain	Incremental Strain	Total Strain	Stress (Fg - Bg) (KSI)	dF = (Area)(Stress) (kip)	dM = (dF)(Ycg) (kip-ft)
22	Straight Strand 33	0.217	-68.000	-68.000	-68.000	172.059	0.00603715	0.011877	0.0179142	261.364	56.72	-321.39
23	Straight Strand 42	0.217	-68.000	-68.000	-68.000	172.059	0.00603715	0.011877	0.0179142	261.364	56.72	-321.39
24	Straight Strand 41	0.217	-68.000	-68.000	-68.000	172.059	0.00603715	0.011877	0.0179142	261.364	56.72	-321.39
25	Straight Strand 40	0.217	-68.000	-68.000	-68.000	172.059	0.00603715	0.011877	0.0179142	261.364	56.72	-321.39
26	Straight Strand 39	0.217	-68.000	-68.000	-68.000	172.059	0.00603715	0.011877	0.0179142	261.364	56.72	-321.39
27	Straight Strand 38	0.217	-68.000	-68.000	-68.000	172.059	0.00603715	0.011877	0.0179142	261.364	56.72	-321.39
28	Straight Strand 36	0.217	-68.000	-68.000	-68.000	172.059	0.00603715	0.011877	0.0179142	261.364	56.72	-321.39
29	Girder	333.537	-61.850	-74.000	-69.327		0	0.0121403	0.0121403	0.000	0.00	0.00
30	Straight Strand 8	0.217	-70.000	-70.000	-70.000	172.059	0.00603715	0.0122737	0.0183109	261.745	56.80	-331.33
31	Straight Strand 21	0.217	-70.000	-70.000	-70.000	172.059	0.00603715	0.0122737	0.0183109	261.745	56.80	-331.33
32	Straight Strand 22	0.217	-70.000	-70.000	-70.000	172.059	0.00603715	0.0122737	0.0183109	261.745	56.80	-331.33
33	Straight Strand 23	0.217	-70.000	-70.000	-70.000	172.059	0.00603715	0.0122737	0.0183109	261.745	56.80	-331.33
34	Straight Strand 24	0.217	-70.000	-70.000	-70.000	172.059	0.00603715	0.0122737	0.0183109	261.745	56.80	-331.33
35	Straight Strand 25	0.217	-70.000	-70.000	-70.000	172.059	0.00603715	0.0122737	0.0183109	261.745	56.80	-331.33
36	Straight Strand 26	0.217	-70.000	-70.000	-70.000	172.059	0.00603715	0.0122737	0.0183109	261.745	56.80	-331.33
37	Straight Strand 27	0.217	-70.000	-70.000	-70.000	172.059	0.00603715	0.0122737	0.0183109	261.745	56.80	-331.33
38	Straight Strand 28	0.217	-70.000	-70.000	-70.000	172.059	0.00603715	0.0122737	0.0183109	261.745	56.80	-331.33
39	Straight Strand 29	0.217	-70.000	-70.000	-70.000	172.059	0.00603715	0.0122737	0.0183109	261.745	56.80	-331.33
40	Straight Strand 30	0.217	-70.000	-70.000	-70.000	172.059	0.00603715	0.0122737	0.0183109	261.745	56.80	-331.33
41	Straight Strand 31	0.217	-70.000	-70.000	-70.000	172.059	0.00603715	0.0122737	0.0183109	261.745	56.80	-331.33
42	Straight Strand 32	0.217	-70.000	-70.000	-70.000	172.059	0.00603715	0.0122737	0.0183109	261.745	56.80	-331.33
43	Harped Strand 2	0.217	-70.000	-70.000	-70.000	172.059	0.00603715	0.0122737	0.0183109	261.745	56.80	-331.33
44	Harped Strand 3	0.217	-70.000	-70.000	-70.000	172.059	0.00603715	0.0122737	0.0183109	261.745	56.80	-331.33
45	Harped Strand 4	0.217	-70.000	-70.000	-70.000	172.059	0.00603715	0.0122737	0.0183109	261.745	56.80	-331.33
46	Harped Strand 5	0.217	-70.000	-70.000	-70.000	172.059	0.00603715	0.0122737	0.0183109	261.745	56.80	-331.33
47	Harped Strand 6	0.217	-70.000	-70.000	-70.000	172.059	0.00603715	0.0122737	0.0183109	261.745	56.80	-331.33
48	Harped Strand 7	0.217	-70.000	-70.000	-70.000	172.059	0.00603715	0.0122737	0.0183109	261.745	56.80	-331.33
49	Harped Strand 8	0.217	-70.000	-70.000	-70.000	172.059	0.00603715	0.0122737	0.0183109	261.745	56.80	-331.33
50	Harped Strand 9	0.217	-70.000	-70.000	-70.000	172.059	0.00603715	0.0122737	0.0183109	261.745	56.80	-331.33
51	Harped Strand 1	0.217	-70.000	-70.000	-70.000	172.059	0.00603715	0.0122737	0.0183109	261.745	56.80	-331.33
52	Harped Strand 11	0.217	-70.000	-70.000	-70.000	172.059	0.00603715	0.0122737	0.0183109	261.745	56.80	-331.33
53	Harped Strand 12	0.217	-70.000	-70.000	-70.000	172.059	0.00603715	0.0122737	0.0183109	261.745	56.80	-331.33
54	Straight Strand 1	0.217	-70.000	-70.000	-70.000	172.059	0.00603715	0.0122737	0.0183109	261.745	56.80	-331.33
55	Straight Strand 2	0.217	-70.000	-70.000	-70.000	172.059	0.00603715	0.0122737	0.0183109	261.745	56.80	-331.33
56	Straight Strand 7	0.217	-70.000	-70.000	-70.000	172.059	0.00603715	0.0122737	0.0183109	261.745	56.80	-331.33
57	Harped Strand 10	0.217	-70.000	-70.000	-70.000	172.059	0.00603715	0.0122737	0.0183109	261.745	56.80	-331.33
58	Straight Strand 17	0.217	-72.000	-72.000	-72.000	172.059	0.00603715	0.0126705	0.0187076	262.121	56.88	-341.28
59	Straight Strand 16	0.217	-72.000	-72.000	-72.000	172.059	0.00603715	0.0126705	0.0187076	262.121	56.88	-341.28
60	Straight Strand 19	0.217	-72.000	-72.000	-72.000	172.059	0.00603715	0.0126705	0.0187076	262.121	56.88	-341.28
61	Straight Strand 15	0.217	-72.000	-72.000	-72.000	172.059	0.00603715	0.0126705	0.0187076	262.121	56.88	-341.28
62	Straight Strand 14	0.217	-72.000	-72.000	-72.000	172.059	0.00603715	0.0126705	0.0187076	262.121	56.88	-341.28
63	Straight Strand 13	0.217	-72.000	-72.000	-72.000	172.059	0.00603715	0.0126705	0.0187076	262.121	56.88	-341.28
64	Straight Strand 12	0.217	-72.000	-72.000	-72.000	172.059	0.00603715	0.0126705	0.0187076	262.121	56.88	-341.28
65	Straight Strand 11	0.217	-72.000	-72.000	-72.000	172.059	0.00603715	0.0126705	0.0187076	262.121	56.88	-341.28
66	Straight Strand 10	0.217	-72.000	-72.000	-72.000	172.059	0.00603715	0.0126705	0.0187076	262.121	56.88	-341.28
67	Straight Strand 5	0.217	-72.000	-72.000	-72.000	172.059	0.00603715	0.0126705	0.0187076	262.121	56.88	-341.28
68	Straight Strand 4	0.217	-72.000	-72.000	-72.000	172.059	0.00603715	0.0126705	0.0187076	262.121	56.88	-341.28
69	Straight Strand 3	0.217	-72.000	-72.000	-72.000	172.059	0.00603715	0.0126705	0.0187076	262.121	56.88	-341.28

Slice	Piece	Area (in2)	Ytop (in)	Ybot (in)	Ycg (in)	fpe (KSI)	Initial Strain	Incremental Strain	Total Strain	Stress (Fg - Bg) (KSI)	dF = (Area)(Stress) (kip)	dM = (dF)(Ycg) (kip-ft)
70	Straight Strand 9	0.217	-72.000	-72.000	-72.000	172.059	0.00603715	0.0126705	0.0187076	262.121	56.88	-341.28
71	Straight Strand 6	0.217	-72.000	-72.000	-72.000	172.059	0.00603715	0.0126705	0.0187076	262.121	56.88	-341.28
72	Straight Strand 20	0.217	-72.000	-72.000	-72.000	172.059	0.00603715	0.0126705	0.0187076	262.121	56.88	-341.28
73	Straight Strand 18	0.217	-72.000	-72.000	-72.000	172.059	0.00603715	0.0126705	0.0187076	262.121	56.88	-341.28

Resultant Force = ∑(δF) = 0.00 kip

Resultant Moment = ∑(δM) = -20526.2 kip-ft

Depth to neutral axis, $c = 15.124$ *in*
Compression Resultant, $C = -3464.24$ *kip*
Depth to Compression Resultant, $d_c = 5.720$ *in*
Tension Resultant, $T = 3464.24$ *kip*
Depth to Tension Resultant, $d_e = 76.822$ *in*
Net tensile strain, $\varepsilon_t = 12.7\text{x}10^{-3}$
Nominal Capacity, $M_n = 20526.2$ *kip-ft*
Moment Arm, $d_e - d_c = M_n/T = 71.102$ *in*

$$0.75 \le \phi = 0.75 + 0.25\frac{(\varepsilon_t - \varepsilon_{cl})}{(\varepsilon_{tl} - \varepsilon_{cl})} \le 1.0$$

$$\phi = 0.75 + \frac{0.25(0.0127 - 0.002)}{(0.005 - 0.002)} = 1.64, use\ 1.0$$

$M_r = 1.0(20526.2)k \cdot ft \ge M_u = 17099.8k \cdot ft$ **OK**

The Moment Capacity Detail report from PGSuper provides the details of the moment capacity strain compatibility analysis.

The total strain in the reinforcement is the sum of the net tensile strain = $12.7\text{x}10^{-3}$ and the initial strain $6.037\text{x}10^{-3}$. The total strain is $18.7\text{x}10^{-3} = 1.87\%$. This is less than the minimum required elongation of 3.5% for A416 strand.

4.7.3.2 *Minimum Reinforcement and the Cracking Moment*

To insure there is sufficient reinforcement in the section to achieve ductile behavior, a minimum amount of reinforcement is required. The minimum reinforcement is such that any section in the girder shall have adequate prestressed reinforcement to develop a factored flexural resistance, M_r, which is at least the lesser of the cracking strength or 133% of the ultimate moment. (LRFD 5.6.3.3)

$$M_{r\,min} = lesser\ of \begin{cases} M_{cr} \\ 1.33M_u \end{cases}$$

The cracking moment is

$$M_{cr} = \gamma_3\left[(\gamma_1 f_r + \gamma_2 f_{cpe})S_c - M_{dnc}\left(\frac{S_c}{S_b} - 1\right)\right]$$

where:

f_r	=	Modulus of rupture
f_{cpe}	=	Compressive stress due to prestressing at the bottom of the girder
S_c	=	Bottom section modulus of the composite section

S_b	=	Bottom section modulus of the non-composite section
M_{dnc}	=	Dead load moment resisted by the non-composite section
γ_1	=	Flexural cracking variability factor = 1.6
γ_2	=	Prestress variability factor = 1.1
γ_3	=	Ratio of specified minimum yield strength to ultimate tensile strength of the reinforcement = 1.0 for prestressed concrete

4.7.3.2.1 Compute cracking moment at 0.5L_g.

$f_r = 0.708ksi$

$f_{cpe} = 5.947ksi$

$S_c = 25509.3in^3$

$S_b = 20594.8in^3$

$M_{dnc} = M_{girder} + M_{diaphragms} + M_{slab} + M_{haunch} = 6734.48k \cdot ft$

$$M_{cr} = 1.0\left[(1.6 \cdot 0.708ksi + 1.1 \cdot 5.947ksi)(25509.3in^3)\left(\frac{1ft}{12in}\right) - (6734.48k \cdot ft)\left(\frac{25509.3in^3}{20594.8in^3} - 1\right)\right]$$
$$= 14707.1\ k \cdot ft$$

4.7.3.2.2 Evaluate Minimum Reinforcement Requirement

$M_u = 17099.8k \cdot ft$

$$M_{r\,min} = lesser\ of \begin{cases} M_{cr} = 14707.1k \cdot ft \\ 1.33M_u = 1.33 \cdot 17099.8k \cdot ft = 22742.7k \cdot ft \end{cases} = 14707.1k \cdot ft$$

$M_r = 20526.2k \cdot ft \geq M_{r\,min} = 14707.1k \cdot ft$ **OK**

4.8 Check Splitting Resistance

Compute the splitting resistance of the pretensioned anchorage zone provided by the vertical reinforcement in the ends of the girder at the service limit states as $P_r = f_s A_s$ (5.9.4.4.1) where,

f_s = the stress in the steel not exceeding *20 ksi*

A_s = total area of vertical reinforcement located within the distance h/4 from the end of the beam (in^2)

h = overall depth of the girder (*in*)

The resistance shall not be less than 4% of the prestressing force at transfer.

The splitting force at the point of prestress transfer is the total of the permanent and temporary strand forces.

$P = 0.04A_{ps}(f_{pj} - \Delta f_{pR0} - \Delta f_{pES})$

Permanent strands

$$P = 0.04(13.237in^2)(202.5 - 19.858ksi) = 96.71\ kip$$

Temporary strands

$$P = 0.04(0.868in^2)(202.5 - 8.656ksi) = 6.73\ kip$$

Total splitting force

$$P = 96.71 + 6.73 = 103.44\ kip$$

The splitting zone is $\frac{h}{4} = \frac{74in}{4}\left(\frac{1ft}{12in}\right) = 1.542ft$.

Splitting resistance is $P_r = f_s A_s$

The required area of splitting reinforcement is

$$103.44kip = (20ksi)A_s$$

$$A_s = 5.172\ in^2$$

$$\frac{5.172in^2}{1.542ft} = 3.62\frac{in^2}{ft}$$

The standard stirrup layout has 2-legs #5 at 3.5" for the end 1'-9" of the beam.

$$\frac{2(0.31in^2)}{\left(\frac{3.5in}{12\ in/ft}\right)} = 2.126\frac{in^2}{ft}$$

Try 2-legs #5 at 2.5".

$$\frac{2(0.31in^2)}{\left(\frac{2.5in}{12\ in/ft}\right)} = 2.976\frac{in^2}{ft}$$

WSDOT BDM 5.6.2F permits the total splitting reinforcement to extend beyond H/4 at a spacing not greater than 2.5".

$$5.172in^2 = 2.976\frac{in^2}{ft}X$$

$$X = 1.74\ ft$$

Use 2-legs #5 at 2.5" for 1'-9"

PGSuper does not currently apply the provisions of WSDOT BDM 5.6.2F.

4.9 Check Confinement Zone Reinforcement

For the distance of *1.5d* from the ends of the girder, reinforcement shall be placed to confine the prestressing steel in the bottom flange (LRFD 5.9.4.4.2). The reinforcement shall not be less than #3 deformed bars with spacing not exceeding *6 in*.

The length of the confinement zone is $1.5d = 1.5(74\ in) = 111\ in = 9.25\ ft$.

Provide #3 bars spaced at 6" for the end 9.25ft of the girder.

5 Shear Design

Ensure the girder has sufficient capacity to resist shear in the Strength I limit state. Verify that shear reinforcement is adequately detailed.

These computations and checks demonstrate shear design at the critical section (LRFD 5.7.3.2 and 5.7.3.3). A complete design will also evaluate shear at locations where abrupt changes to the shear force diagram occur and at changes in reinforcement size and spacing.

5.1 Locate Critical Section for Shear

The critical section for shear is located at d_v from the face of support where d_v is determined based on critical section. For purposes of design, the ultimate shear between the support and the critical section is equal to the shear at the critical section.

Determining the location of the critical section can be challenging because d_v varies with position along the girder. To find the critical section plot d_v along the length of the girder and draw a 45° line from the face of support towards the center of the girder. The intersection of the 45° line and the d_v curve is the location of the critical section. Figure 5-1 illustrates this technique.

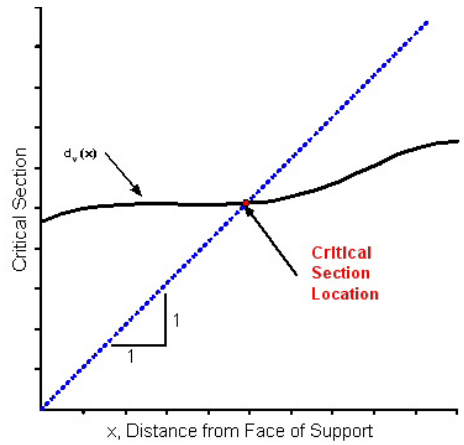

Figure 5-1: Graphical method to Determine Critical Section Location

For this girder, the critical section is located *5.782 ft* from the face of support. The table that follows show the details for finding the critical sections.

Table 5-1: Critical Section Calculation Details for Abutment 1

Location from Left Support (ft)	Assumed C.S. Location (in)	d_v (in)	CS Intersects?
(FoS) 0.500	0.000	69.382	No
(Bar Develop.) 0.834	4.011	69.382	No
(PSXFR) 1.292	9.498	69.382	No
4.625	49.500	69.384	No
6.282	69.384	69.384	*Yes
6.542	72.498	69.384	No
(H) 6.667	74.000	69.384	No
(1.5H) 9.750	111.000	69.384	No
11.958	137.498	69.384	No
(SZB) 12.170	140.037	69.384	No
(SZB) 12.920	149.037	69.384	No
14.591	169.092	69.384	No

* - Intersection values are linearly interpolated

5.2 Check Ultimate Shear Capacity

5.2.1 Compute Nominal Shear Resistance

The nominal shear resistance, V_n, is the lesser of:

$$V_n = V_c + V_p + V_s$$

$$V_n = 0.25 f_c' b_v d_v + V_p$$

for which

$$V_c = 0.0316\beta\sqrt{f_c'}b_v d_v$$

$$V_s = \frac{A_v f_y d_v \cot\theta}{s}$$

where

b_v	=	Effective web width taken as the minimum web width within the depth d_v.
d_v	=	Effective shear depth
s	=	Stirrup spacing
β	=	Factor indicating ability of diagonally cracked concrete to transmit tension
θ	=	Angle of inclination of diagonal compressive stresses
A_v	=	Area of shear reinforcement within a distance s
V_p	=	Component in the direction of the applied shear of the effective prestressing force, positive if resisting the applied shear.

5.2.1.1 *Determination of β and θ*

Step 1: Determine b_v

b_v is the effective web width. For this girder $b_v = 6.125in$.

Step 2: Determine d_v

d_v is the distance measured perpendicular to the neutral axis, between the resultants of the tensile and compressive forces due to flexure (internal moment arm), but it need not be taken less than the greater of $0.9d_e$ or $0.72h$.

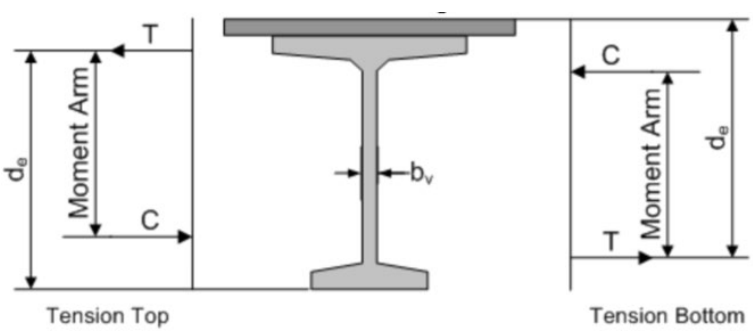

Figure 5-2: Effective Shear Dimensions for Strength I

From a flexural capacity analysis at the critical section the *Moment Arm =59.470 in*, d_e *=77.094 in*, and h *=81 in*.

$$d_v = greatest\ of \begin{cases} Moment\ Arm = 59.470in \\ 0.9d_e = 0.9(77.094in) = 69.384in \\ 0.72h = 0.72(81in) = 58.32in \end{cases}$$

Step 3: Compute stress in prestressing steel when the stress in the surrounding concrete is 0.0 ksi

$$f_{po} = 0.70f_{pu} = 189ksi$$

Step 4: Compute the longitudinal strain on the flexural tension side of the beam

$$\varepsilon_s = \frac{\left(\frac{|M_u|}{d_v} + 0.5N_u + |V_u - V_p| - A_{ps}f_{po}\right)}{E_sA_s + E_{ps}A_{ps} + E_cA_{ct}}\ for\ \varepsilon_s < 0$$

At the critical section the flexural tension side is the bottom half of the beam. The area of concrete and area of steel on the flexural tension side are identified in 3.

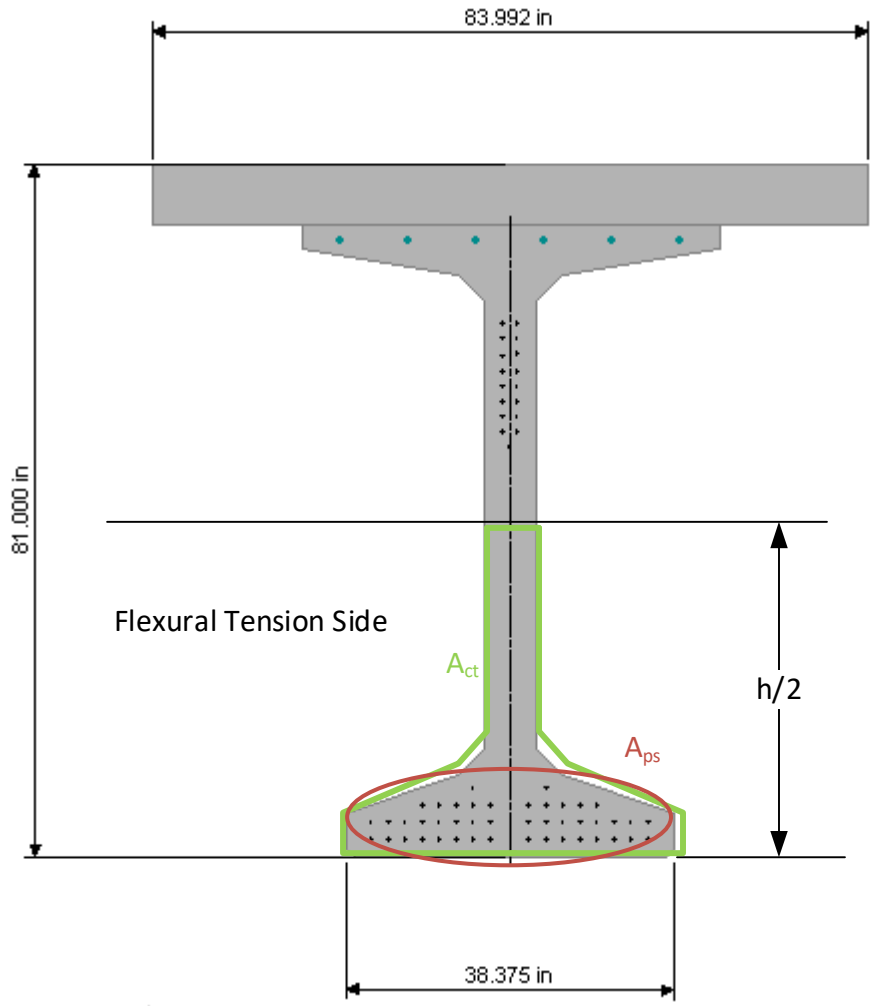

Figure 5-3: Flexural Tension Side of Beam with Area of Concrete and Area of Steel Identified

The longitudinal strain parameters are:

$$M_u = 2603.98\ k \cdot ft$$

$$N_u = 0\ kip$$

$$V_u = 413.73\ kip$$

$$V_p = 43.18\ kip$$

$$|V_u - V_p| = 370.54\ kip$$

$$d_v = 69.384\ in$$

$$A_s = 0\ in^2$$

$$E_s = 29000\ ksi$$

$$A_{ps} = 9.143\ in^2$$

$$E_{ps} = 28500\ ksi$$

$$A_{ct} = 507.406\ in^2$$

$$E_c = 5886.891ksi$$

$$\varepsilon_s = \frac{\left(\frac{|2603.98k\cdot ft|\left(\frac{12in}{1ft}\right)}{69.384in} + 0.5(0) + 370.54kip - (9.143in^2)(189ksi)\right)}{(29000ksi)(0in^2) + (28500ksi)(9.143in^2) + (5886.891ksi)(507.406in^2)} = -0.279x10^{-3} < 0$$

Step 5: Compute β and θ

$$\beta = \frac{4.8}{(1 + 750\varepsilon_s)} = \frac{4.8}{\left(1 + (750)(-0.279x10^{-3})\right)} = 6.07$$

$$\theta = 29 + 3500\varepsilon_s = 29 + (3500)(-0.279x10^{-3}) = 28.02°$$

5.2.1.2 *Compute Shear Capacity of Concrete*

$$V_c = 0.0316\beta\lambda\sqrt{f_c'}b_v d_v = 0.0316(6.07)(1.0)\sqrt{8.7ksi}(6.125in)(69.384in) = 240.51\ kip$$

5.2.1.3 *Compute Shear Capacity of Transverse Reinforcement*

For #5 stirrups at 6", $A_v = 0.62\ in^2$.

$$V_s = \frac{A_v f_y d_v \cot\theta}{s}\lambda_{duct} = \frac{(0.62\ in^2)(60\ ksi)(69.384in)\cot 28.02}{6\ in}(1.0) = 808.29\ kip$$

5.2.1.4 *Compute Nominal Shear Capacity of Section*

$$V_{n1} = V_c + V_p + V_s = 240.51\ kip + 43.18\ kip + 808.29\ kip = 1091.99\ kip$$

$$V_{n2} = 0.25f_c' b_v d_v + V_p = 0.25(8.7\ ksi)(6.125\ in)(69.384\ in) + 43.18\ kip = 967.51kip$$

V_{n2} *governs*

$$V_r = \phi V_n = 0.9(967.51\ kip) = 870.76\ kip$$

5.2.1.5 *Check Ultimate Shear Capacity*

$V_u = 413.73\ kip \leq V_r = 870.76\ kip$ **OK**

Repeat these calculations at all locations where stirrup size or spacing changes or where the applied shear abruptly changes.

5.2.2 Check Requirement for Transverse Reinforcement

Transverse reinforcement is required when $V_u > 0.5\phi(V_c + V_p)$. (LRFD 5.8.2.4)

$$0.5\phi(V_c + V_p) = 0.5(0.9)(240.51\ kip + 43.18\ kip) = 127.66\ kip < 413.73\ kip$$

V_u exceeds the limiting value; therefore, transverse reinforcement is required at this section. Transverse reinforcement is provided. **OK**

5.2.3 Check Minimum Transverse Reinforcement

Where transverse reinforcement is required, as specified in LRFD 5.8.2.4, the area of steel shall not be less than $A_{v\,min} = 0.0316\sqrt{f_c'}\frac{b_v s}{f_y} = 0.0316\sqrt{8.7\ ksi}\frac{(6.125\ in)(6\ in)}{60\ ksi} = 0.057\ in^2 < 0.62\ in^2$

OK

This can also be represented as $\frac{A_v}{s}min = 0.0316\sqrt{f_c'}\frac{b_v}{f_y} = 0.0316\sqrt{8.7\ ksi}\frac{6.125\ in}{60\ ksi} = 0.0095\frac{in^2}{in} = 0.114\frac{in^2}{ft}$.

5.2.4 Check Maximum Spacing of Transverse Reinforcement

The spacing of the transverse reinforcement shall not exceed the following:

- If $v_u < 0.125f_c'$ then $s \leq 0.8d_v \leq 24\ in$
- If $v_u \geq 0.125f_c'$ then $s \leq 0.4d_v \leq 12\ in$

$$v_u = \frac{|V_u - \phi V_p|}{\phi b_v d_v} = \frac{|413.73 - 0.9(43.18)|}{0.9(6.125)(69.384)} = 0.98\ ksi$$

$$0.125f_c' = 0.125(8.7\ ksi) = 1.09\ ksi$$

$$v_u = 0.98\ ksi < 0.125f_c' = 1.09\ ksi$$

$$s_{max} = 0.8d_v = 0.8(69.384\ in) = 55.5\ in \leq 24\ in\ (18\ in\ per\ WSDOT) \rightarrow\ s_{max} = 18\ in$$

The actual spacing is 6.0 in. **OK**

Per WSDOT BDM 5.2.2.B.4, the maximum spacing of transverse reinforcement is limited to 18 inches

---

5.3 Check Longitudinal Reinforcement for Shear

At each section, the tensile capacity of the longitudinal reinforcement on the flexural tension side of the member shall be proportioned to satisfy:

$$A_s f_y + A_{ps} f_{ps} \geq \left[\frac{M_u}{d_v \phi_f} + 0.5\frac{N_u}{\phi_a} + \left(\left|\frac{V_u}{\phi_v} - V_p\right| - 0.5V_s\right) cot\ \theta\right]$$

At the inside edge of the bearing area of simple end supports to the section of critical shear, the longitudinal reinforcement on the flexural tension side of the member shall satisfy:

$$A_s f_y +\ A_{ps} f_{ps} \geq \left(\frac{V_u}{\phi_v} - 0.5V_s - V_p\right) cot\ \theta$$

At the critical section, all the harped strands are above the mid-height of the girder. The harped strands are not on the flexural tension side (See LRFD Figure 5.7.3.4.2-2)

$$A_{ps} = (44)(0.217in^2) = 9.548in^2$$

From the moment capacity analysis, $f_{ps,avg} = 126.855ksi$ which takes into account the lack of full development per LRFD 5.9.4.3.2. Do not apply the reduction again in these calculations.

$d_v = 69.382in$

$V_u = 413.73kip$

$V_s = 459.70ip$

$V_p = 43.18kip$

$\theta = 28.02°$

$$\left(\frac{V_u}{\phi_v} - 0.5V_s - V_p\right) cot\ \theta = \left(\frac{413.73kip}{0.9} - 0.5(459.7kip) - 43.18kip\right) cot\ 28.02° = 350.7kip$$

$A_{ps} f_{ps} = (9.548in^2)(126.885ksi) = 1211.5kip$

1211.5kip ≥ 350.7kip **OK**

5.4 Check Horizontal Interface Shear

This entire design assumes that the slab and girder work together to form a composite section. Verify the slab-girder interface has adequate capacity to develop this composite action.

5.4.1 Check Nominal Capacity

The critical section for shear location is used to demonstrate these calculations. A complete design will verify the slab-girder interface capacity at various sections along the girder.

5.4.1.1 *Compute Nominal Capacity*

The nominal shear resistance at the slab-girder interface is $V_{ni} = cA_{cv} + \mu[A_{vf}f_y + P_c] \leq minimum \begin{cases} K_1 f_c' A_{cv} \\ K_2 A_{cv} \end{cases}$

where

V_{ni}	=	Nominal shear resistance (kip)
A_{cv}	=	Area of concrete engaged in shear transfer (in^2)
A_{vf}	=	Area of shear reinforcement crossing the shear plane (in^2)
f_y	=	Yield strength of reinforcement (ksi)
c	=	Cohesion factor
μ	=	Friction factor
P_c	=	Permanent net compressive force normal to the shear plane, or 0.0 kip if tensile (kip)
f'_c	=	Specified 28-day strength of the weaker concrete (ksi)
K_1	=	0.3
K_2	=	1.8

The top flange of the girder, which is a roughened surface, supports the deck slab. For this situation $c = 0.280\ ksi$ and $\mu = 1.0$.

The area of concrete engaged in the shear transfer: $A_{cv} = b_{vi}L_{vi} = (49\ in)\left(1\frac{in}{in}\right) = 49\frac{in^2}{in}$.

The area of shear reinforcement consists of the stirrups extending from the web into the slab (#5 @ 3.5 in): $A_{vf} = \frac{0.62\ in^2}{3.5\ in} = 0.177\frac{in^2}{in} = 2.126\frac{in^2}{ft}$.

It is conservative to take $P_c = 0\ klf$.

$$V_{ni} = cA_{cv} + \mu[A_{vf}f_y + P_c] = (0.280\ ksi)\left(49\frac{in^2}{in}\frac{12in}{1ft}\right) + 1.0\left[\left(2.126\frac{in^2}{ft}\right)(60ksi) + 0\ klf\right] = 292.183\ \ kip/ft$$

$$K_1 f_c' A_{cv} = 0.3(4ksi)\left(49\frac{in^2}{in}\frac{12in}{ft}\right) = 705.6\ \ kip/ft$$

$$K_2 A_{cv} = 1.8\left(49\frac{in^2}{in}\frac{12in}{ft}\right) = 1058.4\ \ kip/ft$$

$$V_{ni} = 292.183\ \ kip/ft$$

$$V_r = \phi V_{ni} = 0.9(292.183\ \ kip/ft) = 262.965\ kip/ft$$

5.4.1.2 *Compute Demand*

The factored interface shear stress for a concrete girder/slab bridge may be determined as $v_{ui} = \frac{V_u}{b_{vi}d_{vi}}$. The factored interface shear force for a concrete girder/slab bridge may be determined as $V_{ui} = v_{ui}A_{cv}$. Substituting Equation 5.8.4.2-1 into 5.8.4.2-2 the interface shear force is $V_{uh} = \frac{V_u}{d_{vi}}$.

At the critical section, $V_u = 413.73\ kip$.

$$V_{uh} = \frac{V_u Q}{I} = \frac{(413.73kip)(12199.9in^3)}{(1246570.6in^4)}(12\ in/ft) = 48.589\frac{k}{ft}$$

$$V_{uh} \leq V_r$$

OK

5.4.2 Check Minimum Reinforcement

The LRFD specification requires a minimum amount of shear reinforcement in the slab-girder interface. Check to make sure this requirement is satisfied.

The cross-sectional area, A_{vf}, of the reinforcement per unit length should not be less than $\frac{0.05b_v}{f_y}$.

For a cast-in-place concrete slab on clean concrete girder surface free of laitance:

- The minimum interface shear reinforcement need not exceed the lessor of the amount determined using Eqn. 5.8.4.4-1 and the amount needed to resist $\frac{1.33V_{uh}}{\phi}$ as determined using Eqn 5.8.4.1-3
- The minimum reinforcement provisions shall be waived for girder/slab interfaces with surface roughened to an amplitude of 0.25 in where the factored interface shear stress, v_{ui} of Eqn 5.8.4.2-1 is less than 0.210 ksi, and all vertical (transverse) shear reinforcement required by the provisions of Article 5.8.1.1 is extended across the interface and adequately anchored into the slab.

$$v_{uh} = \frac{V_{ui}}{A_{cv}} = \frac{48.589\frac{kip}{ft}}{49\frac{in^2}{in}\frac{12in}{1ft}} = 0.083\frac{ksi}{ft} < 0.210\frac{ksi}{ft}$$

This requirement is waived.

OK

The maximum allowable spacing of the transverse reinforcement is *24.0 in*. The actual spacing at this section is 3.5 *in*. The maximum spacing along the length of the girder is *18.0 in*. **OK**

6 Check the "A" Dimension

The slab offset, or "A" dimension in WSDOT terminology, was assumed to be 12.5in. Verify the haunch is large enough to accommodate the camber, but not too large that the girder has to carry unnecessary dead load. For such a large girder, an extra inch of concrete over the top flange can add up to a considerable amount of weight.

The haunch depth is to be such that at the mid-span the distance between the bottom of the slab and the top of the girder is equal to the slab fillet dimension, 0.75in. Account for geometric effects due to the roadway and camber. The haunch depth at the bearing is $\mathrm{A_{haunch}} = \mathrm{A_{slab+fillet}} + \mathrm{A_{profile\ effect}} + \mathrm{A_{girder\ orientation\ effect}} + \mathrm{A_{excess\ camber}}$.

6.1 Slab and Fillet

The slab and fillet is the gross slab depth plus the fillet dimension. If the actual camber is exactly equal to the predicted value, and all deflections are as predicted, the top of the girder will be exactly $\mathrm{t_{fillet}}$ below the bottom of the deck at its closest point.

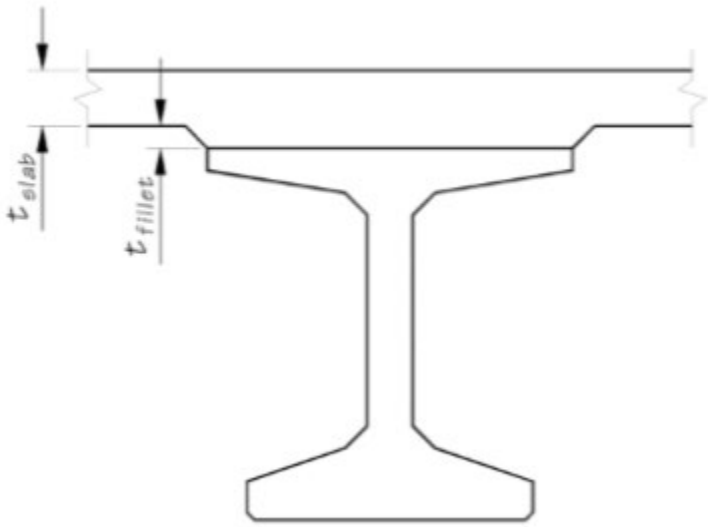

Figure 6-1: Slab + Fillet Effect

$$A_{slab+fillet} = 7.5\ in + 0.75\ in = 8.25in$$

6.2 Profile Effect

PGSuper uses a general approach to determine the profile effect. Draw a chord line from the point where a vertical line passing through the CL Bearings intersect the deck. Then the profile effect is the maximum difference in elevation between this chord line and the roadway surface.

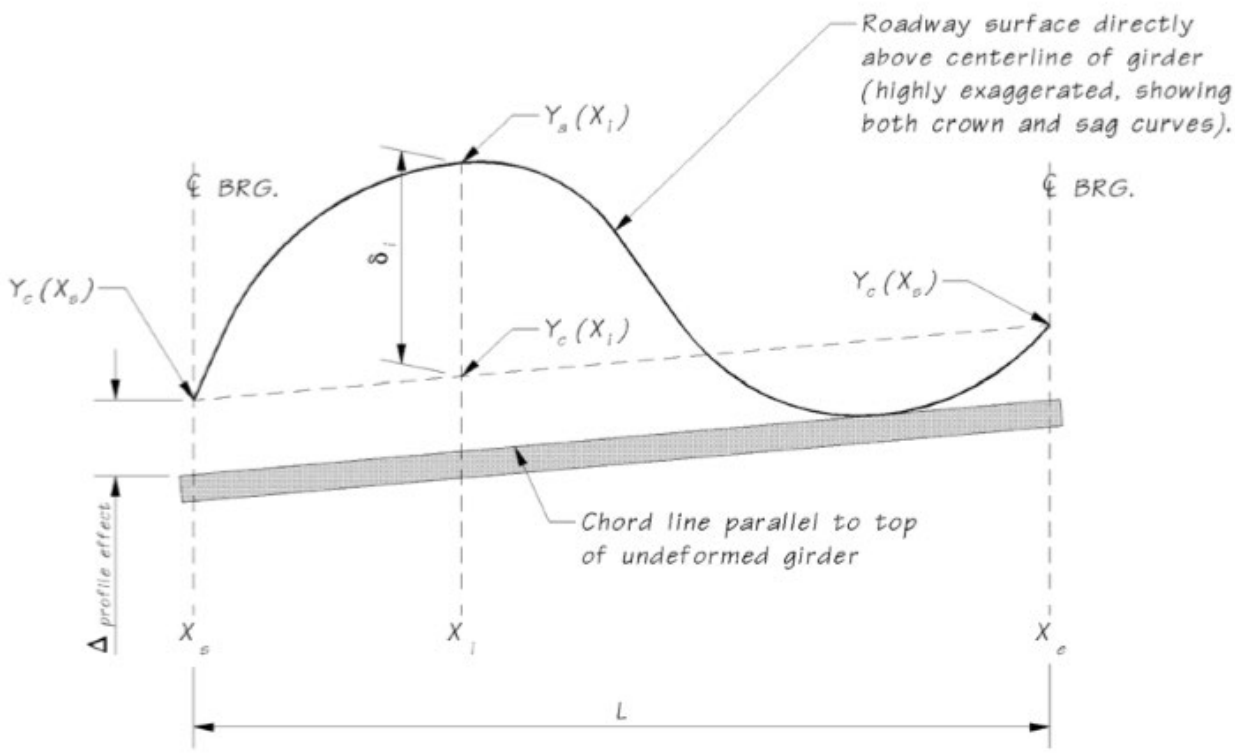

Figure 6-2: General Method for Profile Effect

The entire bridge is within the limits of the horizontal and vertical curves. Also, there are no superelevation transitions within the limits of the bridge. Therefore, the simplified method of computing the profile effect can be used as described in WSDOT BDM Appendix 5-B1.

6.2.1 Vertical Curve

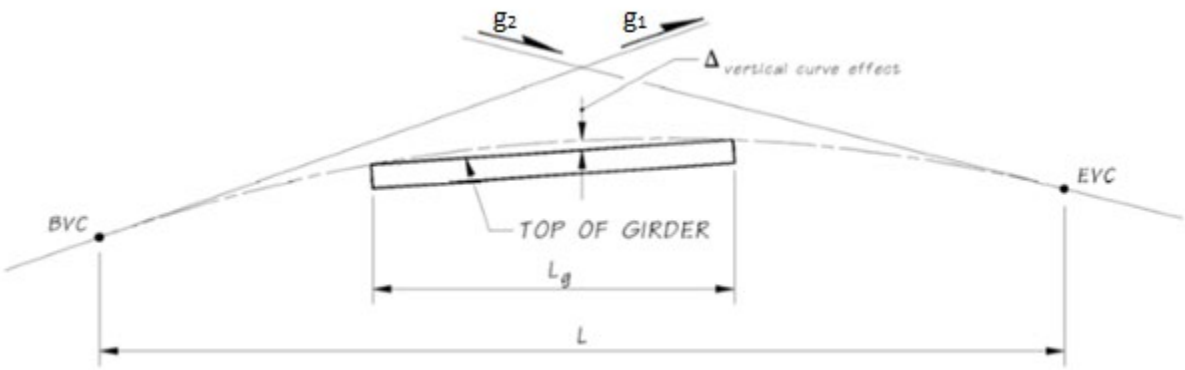

Figure 6-3: Vertical Curve Effect

$$A_{vc} = \frac{1.5(g_2 - g_1)L_g^2}{100L_{vc}}(in) = \frac{1.5\big(-1.5\% - (-2\%)\big)(162.995ft)^2}{100(600ft)} = 0.332\ in$$

6.2.2 Horizontal Curve

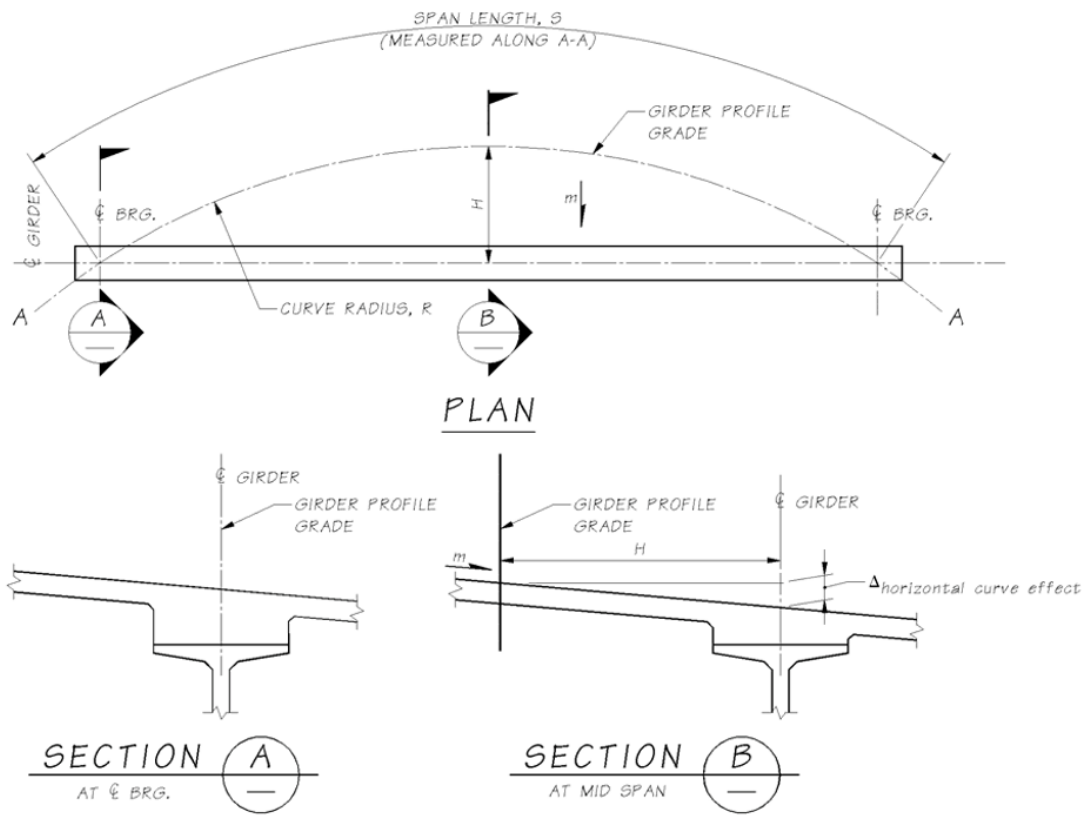

Figure 6-4: Horizontal Curve Effect

$$A_{hc} = \frac{1.5S^2m}{R}(in) = \frac{1.5(159.578\ ft)^2\left(0.04\frac{ft}{ft}\right)}{6000\ ft} = 0.255in$$

6.2.3 Profile Effect

$$A_{profile} = A_{vc} + A_{hc} = 0.332in + 0.255in = 0.587i$$

6.3 Girder Orientation Effect

The girder orientation effect accounts for the crown slope and the orientation of the girder. $A_{girder\ orientation\ effect} = m\frac{w_{tf}}{2}$.

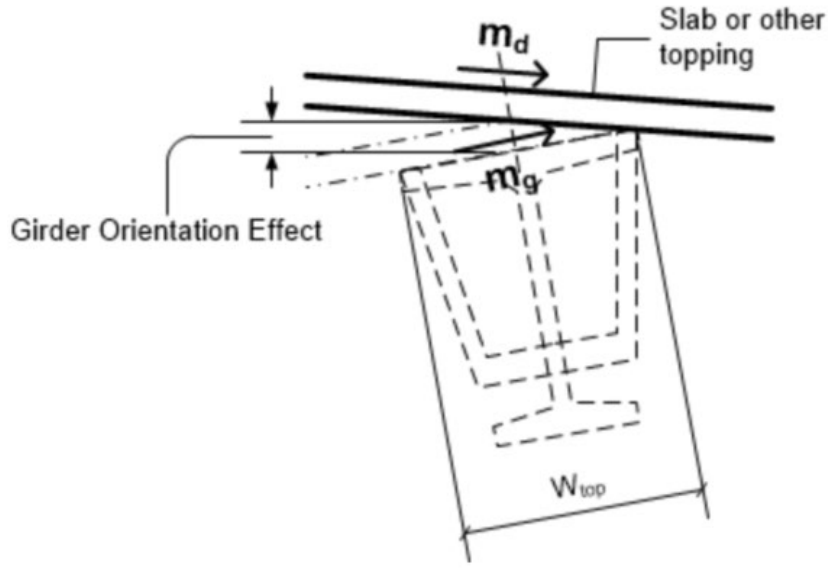

Figure 6-5: Girder Orientation Effect

$$A_{girder\ orientation\ effect} = \left(\frac{W_{top}}{2}\right)\left|\frac{m_d}{\sqrt{1+m_g^2}}\right| = \frac{49in}{2}\left(\frac{0.04-0}{\sqrt{1+0^2}}\right) = 0.980in$$

6.4 Excess Camber

The excess camber is the camber that remains in the girder after all the loads are applied.

Figure 6-6: Camber Effect

The graphic below illustrates how the girder deflects over time.

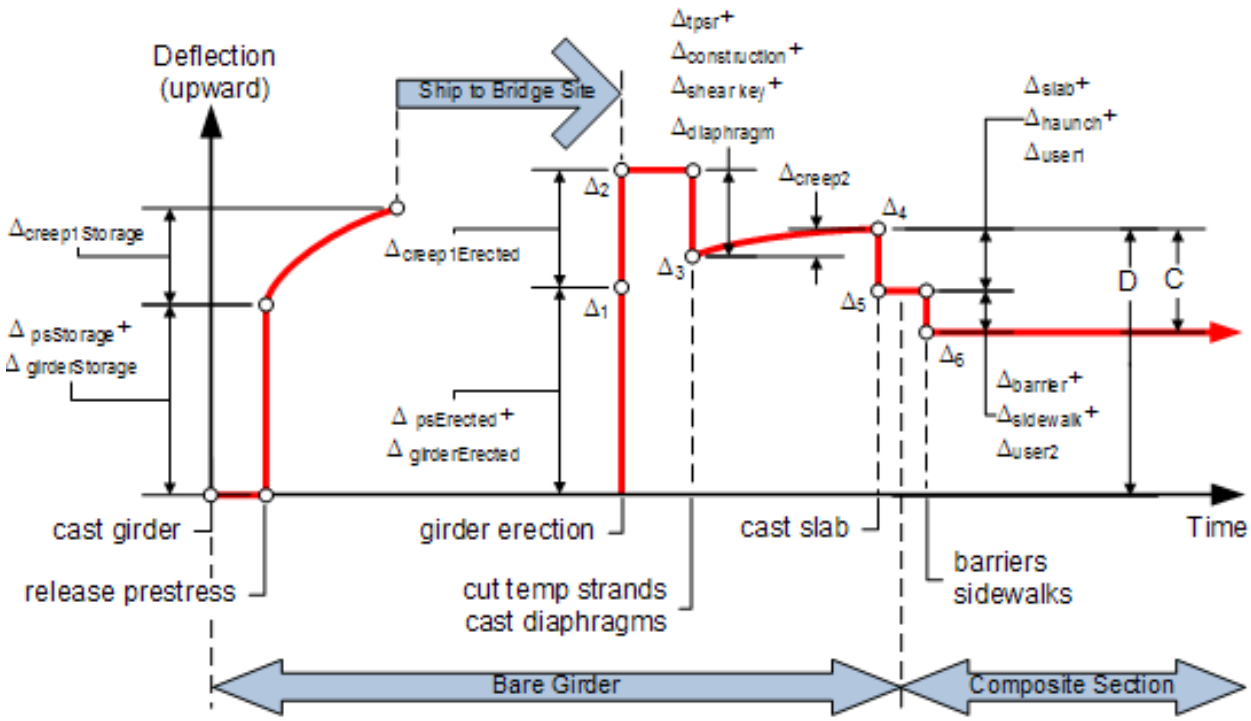

Figure 6-7: Camber Diagram

Assume time-dependent deformations end after deck casting

$$\Delta_{girder} = deflection\ due\ to\ girder\ self\ weight$$

$$\Delta_{ps} = deflection\ due\ to\ permanent\ prestressing, based\ on\ in-place\ span\ length$$

$$\Delta_{creep1} = \psi(t_e, t_i)(\Delta_{girder} + \Delta_{ps})$$

$$\Delta_{diaphragm} = deflection\ due\ to\ diaphragm\ self\ weight$$

$$\delta_{girder} = incremental\ girder\ deflection\ due\ to\ change\ in\ support\ location\ between\ storage\ and\ erection$$

$$\Delta_{creep2} = [\psi(t_d, t_i) - \psi(t_e, t_i)](\Delta_{girder} + \Delta_{ps}) + \psi(t_d, t_e)(\Delta_{tpsr} + \Delta_{diaphragm} + \delta_{girder})$$

$$\Delta_{tpsr} = temporary\ prestressing\ strand\ removal$$

$$\Delta_{deck} = deflection\ due\ to\ deck\ self\ weight$$

$$\Delta_{haunch} = deflection\ due\ to\ haunch\ self\ weight$$

$$\Delta_{barrier} = deflection\ due\ to\ traffic\ barrier\ self\ weight$$

$$\Delta_{excess} = excess\ camber$$

$$\Delta_1 = (\Delta_{girder} + \Delta_{ps})$$

$$\Delta_2 = \Delta_1 + \Delta_{creep1}$$

$$\Delta_3 = \Delta_2 + \Delta_{tpr} + \Delta_{diaphragm}$$

$$\Delta_4 = \Delta_3 + \Delta_{creep2}$$

$$\Delta_5 = \Delta_4 + \Delta_{deck} + \Delta_{haunch}$$
$$\Delta_6 = \Delta_{excess} = \Delta_5 + \Delta_{barrier}$$

6.4.1 Compute Creep Coefficients

The creep coefficients for release until erection and deck casting are computed above.

Prestress release until erection $\psi(t_h = 90, t_i = 1) = \psi(t_e = 90, t_i = 1) = 0.852$

Prestress release until deck casting $\psi(t_d = 120, t_e = 1) = 0.912$

Compute creep coefficient for erection to deck casting

$$f'_{ci} = 7.4\ ksi$$
$$k_f = \frac{5}{1 + 7.4} = 0.610$$
$$k_{td} = \frac{(120 - 90)}{12\left(\frac{100 - 4(7.4)}{7.4 + 20}\right) + (120 - 90)} = 0.488$$
$$\psi(t_d = 120, t_e = 90) = 1.9(1.04)(0.96)(0.610)(0.488)(90)^{-0.118} = 0.331$$

6.4.2 Compute Deflections

Girder Deflection, for the erected girder

$$\Delta_g = \frac{5wL^4}{384E_{ci}I_x} = \frac{5(-1.058klf)(159.578ft)^4}{384(5530.5ksi)(734356.0in^4)}\left(\frac{1728in^3}{1ft^3}\right) = -3.802in$$

Prestress Deflection, $\Delta_{ps} = 7.161in$. This is the deflection measured relative to the ends of the girder. The deflection at the CL Bearing based on the release datum is $\Delta_{psbrg} = 0.263in$. The prestress deflection measured relative to the bearings is $\Delta_{ps} = 7.161in - 0.263in = 6.897in$

Creep Deflection during Storage, $\Delta_{creep1} = 0.852(6.897in - 3.802in) = 2.639in$

Diaphragm Deflection, $\Delta_{diaphragm} = -0.141in$

Slab Deflection, $\Delta_{slab} = -2.610in$

Haunch Deflection, $\Delta_{haunch} = -0.808in$

Because the girder concrete has gained strength, not all the deflection due to the installation of the temporary top strands is recoverable. The elastic rebound due to temporary strand removal is

$$P = 162.93kip$$
$$\Delta_{tpsr} = \frac{PeL^2}{8E_cI_x} = \frac{(162.93kip)(-36.343in)(162.995ft)^2}{8(5886.891ksi)(734356.0in^4)}\left(\frac{144in^2}{1ft^2}\right) = 0.655in$$

Measured relative to the bearings, $\Delta_{tpsr} = 0.628\ in$

Creep Deflection between diaphragm and deck casting, $\Delta_{creep2} = (0.912 - 0.852)(6.897in - 3.802in) + (0.331)(0.655 - 0.141in) = 0.356in$. Since the girder is stored at the locations of the bearings $\delta_{girder} = 0\ in$

Traffic Barrier Deflection, $\Delta_{barrier} = -0.457in$

$$\Delta_1 = -3.802in + 6.897in = 3.096in$$
$$\Delta_2 = 3.096in + 2.639in = 5.735in$$
$$\Delta_3 = 5.735in - 0.141in + 0.628in = 6.222in$$
$$\Delta_4 = 6.222in + 0.347in = 6.569in = D_{120}$$

$$\Delta_5 = 6.569in - 2.610in - 0.808in = 3.150in$$

$$\Delta_6 = 3.150in - 0.457in = 2.693in = \Delta_{excess}$$

The screed camber, $C = \Delta_4 - \Delta_6 = 3.876\ in$

6.5 Check Required Haunch

The required haunch is $A_{haunch} = A_{slab+fillet} + A_{girder\ orientation\ effect} + A_{profile\ effect} + A_{excess\ camber}$

$$A_{haunch} = 8.25in + 0.98in + 0.587in + 2.693in = 12.51 = 12.50\ (BDM\ permits\ rounding\ to\ the\ nearest\ 1/4")\ \ in$$

The provided haunch is 12.5 in. **OK**

6.6 Compute Lower Bound Camber at 40 days

6.6.1 Creep Coefficients

Creep coefficients are computed the same as before, assuming erection at 10 days and deck casting at 40 days.

$$\psi_b(t_d = 10, t_i = 1) = 0.257$$

$$\psi_b(t_f = 40, t_1 = 1) = 0.638$$

$$\psi_b(t_d = 40, t_e = 10) = 0.429$$

6.6.2 Compute Deflections

Creep Deflection during Storage, $\Delta_{creep1} = 0.257(6.897in - 3.802in) = 0.795in$

Creep Deflection between diaphragm and deck casting, $\Delta_{creep2} = (0.638 - 0.257)(6.897in - 3.802in) + (0.429)(0.655 - 0.141in) = 1.399in$

$$\Delta_1 = 3.096in$$

$$\Delta_2 = 3.096in + 0.795in = 3.891in$$

$$\Delta_3 = 3.891in - 0.141in + 0.628in = 4.378in$$

$$\Delta_4 = 4.378in + 1.399in = 5.78in = D_{40}$$

This is an upper bound value for camber at 40 days. There is a $\pm 25\%$ natural variation in camber from the mean value. Therefore, lower bound camber at 40 days $= 0.5D_{40} = 2.884\ in$

6.7 Check for Possible Girder Sag

When the screed camber, C, exceeds the deflection at slab casting, D, the girder will have a net downward deflection, also known as sag. The sag condition is most likely to occur for rapidly constructed bridges.

Compare the screed camber to the average value of camber at 40 days to determine the potential for sag. The average value is 75% $\Delta_{40} = (0.75)(5.769\text{in}) = 4.327\text{in}$

$$\Delta_{\text{excess}} = \text{D} - \text{C}$$

$$\Delta_5 = 5.769 - 2.610 - 0.808 = 2.351\text{in}$$

$$\Delta_6 = 2.351 - 0.457 = 1.894\text{in} = \Delta_{\text{excess}}$$

$$\text{C} = \Delta_4 - \Delta_6 = 5.769 - 1.894 = 3.875\text{in}$$

$$3.875\text{in} < 4.327\text{in}\ \textbf{OK}$$

7 Bearing Seat Elevations

From the PGSuper Bridge Geometry Report, the roadway surface elevations at the CL Bearing points for Girder A are:

Abutment 1, Sta. 7+02.70, Offset 17.463ft L, Elev. 104.688ft

Abutment 2, Sta. 8+61.82, Offset 17.457ft L, Elev. 101.748ft

The slope of the girder is $\frac{104.688ft-101.748ft}{159.578ft} = -0.0184\frac{ft}{ft}$

The slope-adjusted height of the girder is $74in\left(\sqrt{(-0.0184)^2+(1)^2}\right) = 74.013in$

Deduct the sloped adjusted girder height and the slab offset from the roadway surface elevation to get the bottom of girder elevation.

Bottom of girder elevation at Abutment 1: Elev = $104.688ft - 74.013in\left(\frac{1ft}{12in}\right) - 12.5in\left(\frac{1ft}{12in}\right) = 97.479ft$

Bottom of girder elevation at Abutment 2: Elev = $101.748ft - 74.013in\left(\frac{1ft}{12in}\right) - 12.5in\left(\frac{1ft}{12in}\right) = 94.538ft$

After designing the bearings, add the bearing recess (typically ½") and deduct the bearing depth from the bottom of girder elevation to get the bearing seat elevation.

8 Design Summary

$$f'_{ci} = 7.2ksi$$

$$f'_c = 8.7ksi$$

$$\#\ Permanent\ Strands = 61\ (44\ Straight, 17\ Harped)$$

$$\#\ Temporary\ Top\ Strands = 4$$

$$Slab\ Offset\ (\text{"}A\text{"}Dimension) = 12.5in$$

$$Pick\ Point = 8'3"$$

$$Bunk\ Point = 13'8"$$

$$Haul\ Truck\ Configuration = 40{,}000\ \frac{kip-in}{rad}\ with\ 72"\ wheel\ base\ (HT40-72)$$

$$Use\ stirrups\ per\ WSDOT\ standard$$

9 Load Rating

The bridge opens for traffic without the future overlay installed. For this reason, take the DW force effects associated with the overlay as zero. Installing the overlay necessitates updating the load rating analysis.

9.1 Inventory Rating

9.1.1 Moment

$$RF = \frac{\phi_c\phi_s\phi_n KM_n - \gamma_{DC}M_{DC} - \gamma_{DW}M_{DW}}{\gamma_{LL}M_{LLIM}}$$

$$\phi_c\phi_s \geq 0.85$$

$$K = \frac{M_r}{M_{min}} \leq 1.0$$

At 0.5L

$$\phi_c = \phi_s = \phi_n = 1.0$$

$$M_n = 20526.2k \cdot ft$$

$$M_{DC} = 7466.6k \cdot ft$$

$$M_{DW} = 0.0k \cdot ft$$

$$M_{LLIM} = 3804.05\frac{k \cdot ft}{girder}$$

$$M_{cr} = 14707.13k \cdot ft$$

$$M_u = 17099.79k \cdot ft$$

$$M_{min} = min\begin{cases} M_{cr} \\ 1.33M_u \end{cases} = 14707.13k \cdot ft$$

$$K = \frac{(1.0)(20526.2k \cdot ft)}{14707.13k \cdot ft} = 1.39 \therefore 1.0$$

$$\gamma_{DC} = 1.25, \gamma_{DW} = 1.50, \gamma_{LL} = 1.75$$

$$RF = \frac{(1)(1)(1)(1)(20526.2k \cdot ft) - (1.25)(7466.6k \cdot ft) - (1.5)(0k \cdot ft)}{(1.75)(3804.05k \cdot ft)} = 1.68$$

9.1.2 Shear

$$RF = \frac{\phi_c\phi_s\phi_n V_n - \gamma_{DC}V_{DC} - \gamma_{DW}V_{DW}}{\gamma_{LL}V_{LLIM}}$$

At 10.388ft and 142.908ft (location where stirrup spacing increases)

$$\phi_c = \phi_s = 1.0, \phi_n = 0.9$$

$$V_n = 518.10kip$$

$$V_{DC} = 147.84kip$$

$$V_{DW} = 0.0k$$

$$V_{LLIM} = 90.13\frac{kip}{girder}$$

$$\gamma_{DC} = 1.25, \gamma_{DW} = 1.50, \gamma_{LL} = 1.75$$

$$RF = \frac{(1)(1)(0.9)(518.10kip) - (1.25)(147.84kip) - (1.5)(0kip)}{(1.75)(90.13kip)} = 1.78$$

9.1.3 Bending Stress – Service III limit state

$$RF = \frac{f_R - \gamma_{DC}f_{DC} - \gamma_{DW}f_{DW}}{\gamma_{LL}f_{LLIM}}$$

Per WSDOT BDM 13.2.4, use the AASHTO LRFD specifications tension stress limit and live load factor for load rating purposes.

$$f_R = f_{limit} - f_{ps} = 0.19\lambda\sqrt{f_c'} - f_{ps}$$

$$f_R = 0.19(1.0)\sqrt{8.7}ksi - (-6.221ksi) = 0.560ksi - (-6.221ksi) = 6.781ksi$$

Since we are using refined losses and elastic gains, the live load factor is 1.0 (See AASHTO LRFD Table 3.4.1-4).

$$\gamma_{LL} = 1.0$$

$$RF = \frac{6.781ksi - (1.0)(4.268ksi) - 1.0(0ksi)}{(1.0)(1.789ksi)} = 1.40$$

9.2 Operating Rating

9.2.1 Moment

$$RF = \frac{\phi_c \phi_s \phi_n K M_n - \gamma_{DC} M_{DC} - \gamma_{DW} M_{DW}}{\gamma_{LL} M_{LLIM}}$$

$$\phi_c \phi_s \geq 0.85$$

$$K = \frac{M_r}{M_{min}} \leq 1.0$$

At 0.5L

$$\phi_c = \phi_s = \phi_n = 1.0$$

$$M_n = 20526.2k \cdot ft$$

$$M_{DC} = 7466.6k \cdot ft$$

$$M_{DW} = 0.0k \cdot ft$$

$$M_{LLIM} = 3804.05 \frac{k \cdot ft}{girder}$$

$$M_{cr} = 14707.13k \cdot ft$$

$$M_u = 17099.79k \cdot ft$$

$$M_{min} = min \begin{cases} M_{cr} \\ 1.33 M_u \end{cases} = 14707.13k \cdot ft$$

$$K = \frac{(1.0)(20526.2k \cdot ft)}{14707.13k \cdot ft} = 1.39 \therefore 1.0$$

$$\gamma_{DC} = 1.25, \gamma_{DW} = 1.50, \gamma_{LL} = 1.35$$

$$RF = \frac{(1)(1)(1)(1)(20526.2k \cdot ft) - (1.25)(7466.6k \cdot ft) - (1.5)(0k \cdot ft)}{(1.35)(3804.05k \cdot ft)} = 2.18$$

9.2.2 Shear

$$RF = \frac{\phi_c \phi_s \phi_n V_n - \gamma_{DC} V_{DC} - \gamma_{DW} V_{DW}}{\gamma_{LL} V_{LLIM}}$$

At 10.388ft and 142.908ft (location where stirrup spacing increases)

$$\phi_c = \phi_s = 1.0, \phi_n = 0.9$$

$$V_n = 518.10kip$$

$$V_{DC} = 147.84kip$$

$$V_{DW} = 0.0k$$

$$V_{LLIM} = 90.13 \frac{kip}{girder}$$

$$\gamma_{DC} = 1.25, \gamma_{DW} = 1.50, \gamma_{LL} = 1.35$$

$$RF = \frac{(1)(1)(0.9)(518.10kip) - (1.25)(147.84kip) - (1.5)(0kip)}{(1.35)(90.13kip)} = 2.38$$

9.3 Legal Loads

Type 3, $M_{LLIM} = 1404.25k \cdot ft$

Type 3S2, $M_{LLIM} = 1826.63k \cdot ft$

Type 3-3, $M_{LLIM} = 1931.27k \cdot ft$

Type 3-3 rating will govern so we will show calculations of the rating factors for this loading. The rating factor calculations for the other loadings will be similar. The rating factor calculations for NRL, EV2 and EV3 are similar.

9.3.1 Moment

$$RF = \frac{\phi_c \phi_s \phi_n K M_n - \gamma_{DC} M_{DC} - \gamma_{DW} M_{DW}}{\gamma_{LL} M_{LLIM}}$$

$$\phi_c \phi_s \geq 0.85$$

$$K = \frac{M_r}{M_{min}} \leq 1.0$$

At 0.5L

$$\phi_c = \phi_s = \phi_n = 1.0$$

$$M_n = 20526.2k \cdot ft$$

$$M_{DC} = 7466.6k \cdot ft$$

$$M_{DW} = 0.0k \cdot ft$$

$$M_{LLIM} = 1931.27 \frac{k \cdot ft}{girder}$$

$$M_{cr} = 14707.13k \cdot ft$$

$$M_u = 17099.79k \cdot ft$$

$$M_{min} = min \begin{cases} M_{cr} \\ 1.33 M_u \end{cases} = 14707.13k \cdot ft$$

$$K = \frac{(1.0)(20526.2k \cdot ft)}{14707.13k \cdot ft} = 1.39 \therefore 1.0$$

$$\gamma_{DC} = 1.25, \gamma_{DW} = 1.50, \gamma_{LL} = 1.45$$

$$RF = \frac{(1)(1)(1)(1)(20526.2k \cdot ft) - (1.25)(7466.6k \cdot ft) - (1.5)(0k \cdot ft)}{(1.45)(1931.27k \cdot ft)} = 4.0$$

9.3.2 Shear

$$RF = \frac{\phi_c \phi_s \phi_n V_n - \gamma_{DC} V_{DC} - \gamma_{DW} V_{DW}}{\gamma_{LL} V_{LLIM}}$$

At 10.388ft and 142.908ft (location where stirrup spacing increases)

$$\phi_c = \phi_s = 1.0, \phi_n = 0.9$$

$$V_n = 518.10kip$$

$$V_{DC} = 147.84kip$$

$$V_{DW} = 0.0k$$

$$V_{LLIM} = 90.13 \frac{kip}{girder}$$

$$\gamma_{DC} = 1.25, \gamma_{DW} = 1.50, \gamma_{LL} = 1.45$$

$$RF = \frac{(1)(1)(0.9)(518.10kip) - (1.25)(147.84kip) - (1.5)(0kip)}{(1.45)(90.13kip)} = 4.29$$

9.3.3 Bending Stress – Service III limit state

In accordance with WSDOT BDM 13.1.1 Service III ratings for legal loads can be ignored at the discretion of the state Load Rating Engineer. Without a variance for this structure, the Service III rating factor will be computed.

$$RF = \frac{f_R - \gamma_{DC} f_{DC} - \gamma_{DW} f_{DW}}{\gamma_{LL} f_{LLIM}}$$

For load rating we use the AASHTO specified tension limit and live load factor

$$f_R = f_{limit} - f_{ps} = 0.19\lambda\sqrt{f_c'} - f_{ps}$$

Before we can compute the stress in the girder due to the prestressing, we must compute the effective prestress accounting for the elastic gain for to the Type 3-3 loading.

$$\Delta f_{pLL} = \frac{E_p}{E_c}\frac{M_{LLIM}(Y_{bc} - Y_{bg} + e)}{I_c} = \frac{28500ksi}{5886.891\ ksi}\frac{(1931.27k \cdot ft)(48.867in - 35.657in + 31.477in)}{1243580.6in^4}\left(\frac{12in}{1ft}\right) = 4.032ksi$$

$$P = (13.237in^2)(172.059ksi + 4.032ksi) = 2330.92kip$$

$$f_{ps} = \frac{-2330.92kip}{923.531in^2} + \frac{(-2330.92kip)(31.477in)}{20594.8in^3} = -6.086ksi$$

$$f_R = 0.19(1.0)\sqrt{8.7}ksi - (-6.086ksi) = 0.560ksi - (-6.086ksi) = 6.647ksi$$

$$\gamma_{LL} = 1.0$$

$$RF = \frac{6.647ksi - (1.0)(4.268ksi) - 1.0(0ksi)}{(1.0)(0.909ksi)} = 2.62$$

9.3.4 Special Hauling Vehicles (SHV)

WSDOT policy (BDM 13.2.19) requires bridges to be load rated for SHVs if the rating factor for Type 3, Type 3S2, or Type3-3 are less than 1.35. The legal load rating factors exceed this threshold, so the additional load rating analysis is not required.

9.4 Permit Loads

WSDOT load rates bridges for two standard overload vehicles, Overload 1 (OL1) and Overload 2 (OL2). The vehicle details are presented in WSDOT BDM 13.1.5.

The load ratings for the permit loads are the same as the legal loads (with the obvious exception of the live load effects and load factors being different).

In accordance with WSDOT BDM 13.1.1 Service III ratings for permit loads can be ignored at the discretion of the state Load Rating Engineer. Without a variance for this structure, the Service III rating factor is computed.

The rating factors are summarized in Table 9-1.

Table 9-1: Load rating summary for permit vehicles.

Permit Vehicle	Moment Rating	Shear Rating	Service III Stress Rating
OL1	3.58	3.98	1.98
OL2	1.95	2.18	1.15

WSDOT also evaluates the optional reinforcement yielding check (MBE 6A.5.4.2.2b). The stress in the prestressing steel nearest the extreme tension fiber should not exceed $0.9f_y$. The analysis method used by PGSuper follows MBE A3.13.4.2b.

$$f_r = 0.9f_y = (0.9)(0.9)f_{pu} = (0.9)(0.9)(270ksi) = 218.7ksi$$

Moment beyond cracking

$$M_{bcr} = \gamma_{DC}M_{DC} + \gamma_{DW}M_{DW} + \gamma_{LL}M_{LLIM} - M_{cr}$$

Unlike the other permit rating cases where the one loaded lane live load distribution factor is used (MBE 6A.4.5.4.2b), use the governing of one loaded lane and two or more loaded lanes for these calculations (MBE C6A.5.4.2.2b).

For OL1, $M_{LLIM} = 2605.89k \cdot ft$ per girder.

For OL2, $M_{LLIM} = 4794.03k \cdot ft$ per girder

$$M_{bcr} = (1.0)(7466.6k \cdot ft) + (1.0)(0) + (1.0)(4794.03k \cdot ft) - 14707.13k \cdot ft = -2446.5k \cdot ft$$

Because $M_{bcr} < 0$, the loads aren't enough to cause cracking, so take $M_{bcr} = 0.0k \cdot ft$

The additional stress transferred to the reinforcement due to cracking is

$$\mathrm{f_{bcr}} = \frac{\mathrm{E_s}}{\mathrm{E_g}}\frac{\mathrm{M_{bcr}(d_s - c)}}{\mathrm{I_{cr}}} = 0.0\mathrm{ksi}$$

$$\mathrm{f_s = f_{pe} + f_{bcr}}$$

Compute the effective prestress

For OL1

$$\Delta f_{pLL} = \frac{E_p}{E_c}\frac{M_{LLIM}(Y_{bc} - Y_{bg} + e)}{I_c} = \frac{28500ksi}{5886.891\ ksi}\frac{(2065.89k \cdot ft)(48.867in - 35.657in + 31.477in)}{1243580.6in^4}\left(\frac{12in}{1ft}\right) = 4.312ksi$$

$$f_{pe} = 172.056ksi + 4.312ksi = 176.37\ ksi$$

$$f_s = f_{pe} + f_{brc} = 176.37ksi + 0ksi = 176.37ksi$$

For OL2

$$\Delta f_{pLL} = \frac{E_p}{E_c}\frac{M_{LLIM}(Y_{bc} - Y_{bg} + e)}{I_c} = \frac{28500ksi}{5886.891\ ksi}\frac{(4794.03k \cdot ft)(48.867in - 35.657in + 31.477in)}{1243580.6in^4}\left(\frac{12in}{1ft}\right) = 10.01ksi$$

$$f_{pe} = 172.056ksi + 10.01ksi = 182.07\ ksi$$

$$f_s = 182.07ksi$$

Yield stress ratio

$$SR = \frac{f_r}{f_s}$$

OL1

$$SR = \frac{218.7ksi}{176.37ksi} = 1.24$$

OL2

$$SR = \frac{218.7ksi}{182.07ksi} = 1.20$$

10 Elastomeric Bearing Design

10.1 Introduction

The primary function of bearings is to transmit loads from the superstructure to the substructure while also accommodating longitudinal movement and/or rotations. They also provide vertical support to the superstructure, allow free rotation, control transfer of lateral loads to the substructure, and control the thermal restraint forces.

Steel-reinforced elastomeric bearings consist of alternating layers of ASTM A36 steel shims (typically 14 gage thickness) with a constant-amplitude fatigue threshold of 24.0 ksi, and elastomer layers.

AASHTO LRFD Method B is the preferred method when bearings are reinforced. Checks include the limits for shear strain due to the combined effects of compression, rotation and shear deformation, and limits for stability, reinforcement thickness, anchorage requirements, bearing slip, and hydrostatic tension (if the bearing has externally bonded plates).

10.2 Loads And Movements for Analysis

The diagram below illustrates shear strain failure modes for bearings due to vertical forces, rotations, and translation.

Figure 10-1: Illustration of failure modes for elastomeric bearings

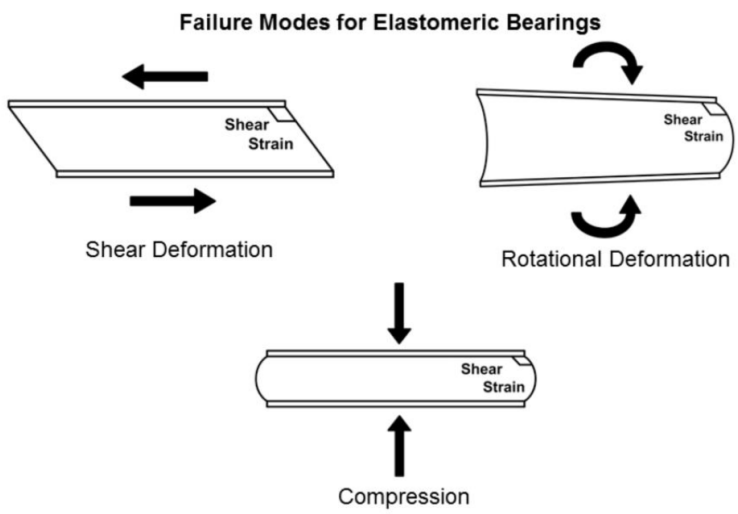

10.2.1 Loads

From PG Super:

$P_D = 215.60$ kips

$P_{Lane} = 118.85\ kips$

P_D = Dead load
P_{Lane} = Vertical live load per lane

Lane live loads are assumed to be distributed evenly over bearings:

$$LLDF = \frac{mpf \times nLanes}{nGirders} = \frac{0.85 \times 3}{6} = 0.425$$

$P_L = 118.85\ kips \times 0.425 = 50.51\ kips$
$P_L = Vertical\ live\ load$

10.2.2 Rotations

Rotations θ_{st} and θ_{cy} are observed from the time the girder is erected to the final time. Static rotations include an allowance of $\mp$ 0.005 radians for uncertainty (LRFD 14.4.2.1). Live loads do not include impact. The slope of the bearing recess is such that the girder end is flat in the final service condition.

10.2.2.1 *Flexural Rotations*

Flexural rotations are due to rotation at the end of the girder, about the primary bending axis.

Girder:

$$\theta_{girder} = \frac{(-1.058\ klf)(159.578ft)^3}{24(5530.5ksi)(734356.0in^4)}\left(\frac{144in^2}{1ft^2}\right) = -6.35 \times 10^{-3}\ rad$$

Diaphragm:

$$\theta_{diaphragm} =$$

$$\frac{1.76\ kip \times 39.894\text{ ft }(159.578\text{ ft} - 39.894\text{ ft})(159.578\text{ ft} \times 2 - 39.894\text{ ft})}{6 \times 159.578\text{ ft} \times (5886.891ksi)(734356.0in^4)}\left(\frac{144in^2}{1ft^2}\right)$$

$$+\frac{1.76\ kip \times 79.789\text{ ft }(159.578\text{ ft} - 79.789\text{ ft})(159.578\text{ ft} \times 2 - 79.789\text{ ft})}{6 \times 159.578\text{ ft} \times (5886.891ksi)(734356.0in^4)}\left(\frac{144in^2}{1ft^2}\right)$$

$$+\frac{1.76\ kip \times 119.683\text{ ft }(159.578\text{ ft} - 119.683\text{ ft})(159.578\text{ ft} \times 2 - 119.683\text{ ft})}{6 \times 159.578\text{ ft} \times (5886.891ksi)(734356.0in^4)}\left(\frac{144in^2}{1ft^2}\right)$$

$$= -8.16 \times 10^{-5}\ rad - 9.33 \times 10^{-5}\ rad - 6.21 \times 10^{-5}\ rad = -2.3 \times 10^{-4}\ rad$$

Slab and haunch:

Since the slab and haunch loads are non-uniformly distributed along the girder, the corresponding end rotation would be complex to calculate by hand, so the results from PG Super are provided:

$$\theta_{slab} = -0.00436\ rad$$

$$\theta_{haunch} = -0.00135\ rad$$

Barrier:

$$\theta_{barrier} = \frac{(-0.230\ klf)(159.578ft)^3}{24(5886.891ksi)(1246570.6in^4)}\left(\frac{144in^2}{1ft^2}\right) = 7.64 \times 10^{-4}\ rad$$

Overlay:

$$\theta_{overlay} = \frac{(-0.232\ klf)(159.578ft)^3}{24(5886.891ksi)(1246570.6in^4)}\left(\frac{144in^2}{1ft^2}\right) = 7.71 \times 10^{-4}\ rad$$

Temporary top stand removal:

$$\theta_{tpsr} = \frac{PeL}{2E_cI_x} = \frac{(162.93kip)(-36.343in)(162.995ft)}{2(5886.891ksi)(734356.0in^4)}\left(\frac{12in}{1ft}\right) = 1.3395 \times 10^{-3}\ rad$$

Straight strands:

$$\theta_{ss} = \frac{PeL}{2E_{ci}I_x} = \frac{(1719.95kip)(31.447in)(162.995ft)}{2(5530.5ksi)(734356.0in^4)}\left(\frac{12in}{1ft}\right) = 0.01302\ rad$$

Harped strands:

$$\theta_{hs} = \frac{L(Pe + NLb(1-b))}{2E_{ci}I_x}$$

$$= \frac{(162.995ft)\left(\frac{12in}{1ft}\right)[664.52\ kip(-26.813in) + 48.91kip(162.995ft)\left(\frac{12in}{1ft}\right)(0.4)(1-0.4)]}{2(5530.5ksi)(734356in^4)}$$

$$= -1.238 \times 10^{-3} rad$$

Temporary top strand at release:

$$P_{temp} = 4(0.217in^2)(202.5ksi - 1.98ksi) = 174.05\ kip$$

$$\theta_{tpsi} = \frac{PeL}{2E_cI_x} = \frac{(174.05\ kip)(-36.343in)(162.995ft)}{2(5530.5ksi)(734356.0in^4)}\left(\frac{12in}{1ft}\right) = -0.00152\ rad$$

Total prestress:

$$\theta_{ps} = \theta_{ss} + \theta_{hs} + \theta_{tpsi} = 0.01302\,rad + 1.238 \times 10^{-3} rad - 0.00152\,rad = 0.01274\,rad$$

Creep:

$$\theta_{creep} = \left(\psi_b(t_d, t_i) - \psi(t_e, t_i)\right)\left(\theta_{girder} + \theta_{ps}\right) + \psi(t_d, t_e)\left(\theta_{diaphragm} + \theta_{tpsr}\right)$$

From before,

$$\psi(t_d, t_e) = 0.331$$

$$\psi_b(t_d, t_i) = 0.912$$

$$\psi(t_e, t_i) = 0.852$$

$$\theta_{creep} = (0.912 - 0.852)(-6.35 \times 10^{-3}\,rad + 0.01274\,rad) + 0.331(-2.3 \times 10^{-4}\,rad + 1.3395 \times 10^{-3}\,rad)$$

$$= 0.00074\,rad$$

Total static rotation:

$$\theta_{st} = {}^{*}\theta_{girder} + {}^{*}\theta_{pretension} + \theta_{diaphragm} + \theta_{slab} + \theta_{haunch} + \theta_{barrier} + \theta_{overlay} + \theta_{creep} + \theta_{uncertainty}$$

$$= 0.00000 + 0.00000 - 0.00023 - 0.00436 - 0.00135 - 0.00076 - 0.00077 + 0.00074 - 0.005$$

$$= -0.01174 \text{ rad}$$

*Since girder self-weight and pretension rotations happen immediately after release (i.e., before erection), they are considered to be 0 since they are included in the slope of the bearing recess. Instead, these rotations are used for calculating rotation due to creep. For conservative design, long-term rotations resulting in girder bottom flange elongation due to deck shrinkage are ignored.

Live load rotations are computed per girder, by PG Super:

$$\theta_{cy} = \theta_{LL-design} = -0.00303 \text{ rad}$$

10.2.2.2 *Torsional Rotations*

Torsional rotations are due to girder twisting about the girder longitudinal axis due to skew at the abutment. There are no torsional rotations since there is no skew at Pier 1.

10.2.3 Shear Deformation

75% of the thermal movement between design extreme temperatures is used for shear deformation (WSDOT BDM 9.2.5A). The total shear deformation is the sum of the effects of thermal movement combined with time-dependent effects due to creep, shrinkage, and relaxation:

$$\Delta_s = 0.75\Delta_{thermal} + \Delta_{cr} + \Delta_{sh} + \Delta_{rel}$$

10.2.3.1 *Apparent Point of Fixity (PCI BDM 10.4.2)*

Changes in girder length due to volume changes (e.g. thermal expansion, shrinkage, etc.) are over the distance from an apparent point of fixity. For a single span girder between expansion joints, the apparent point of fixity is:

$$L = \frac{159.578\ ft}{2} = 79.789\ ft$$

The diagram below illustrates the concept used to determine the apparent point of fixity:

Diagram 10-2: Illustration of Apparent Point of Fixity Concept

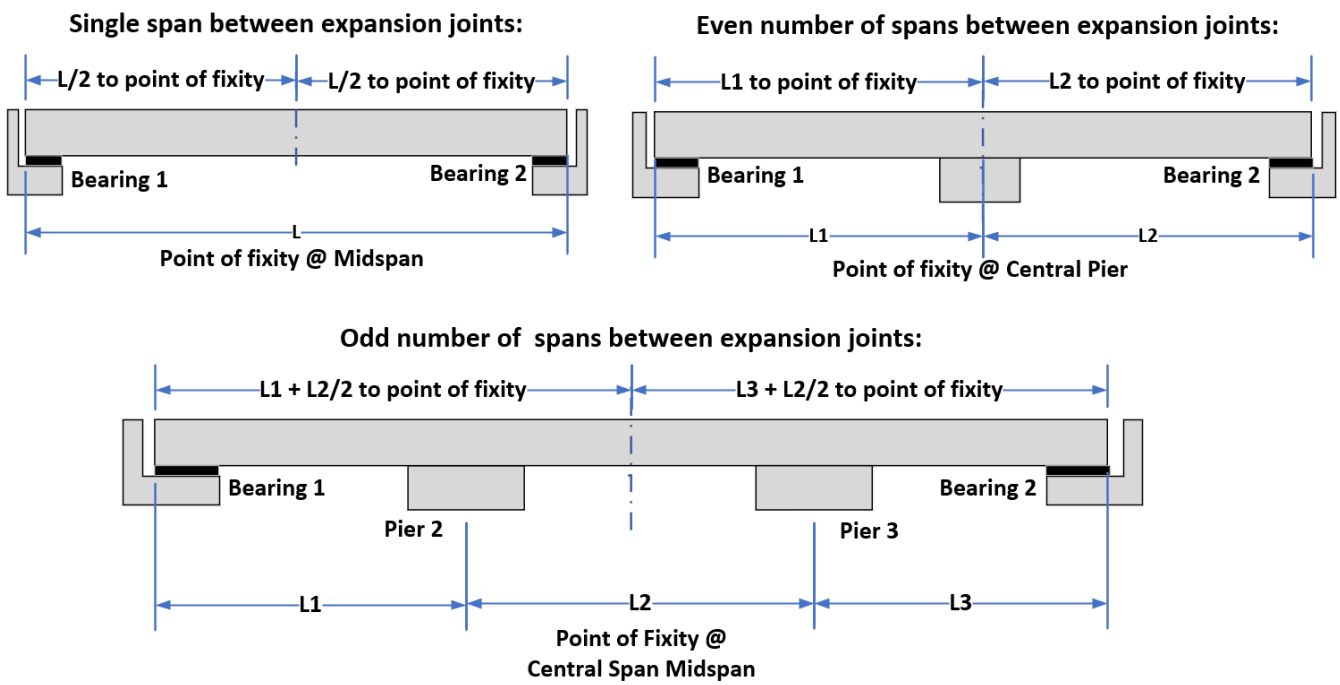

10.2.3.2 *Thermal Movement*

$$\Delta L_{Thermal} = 0.75L \times \alpha \times \Delta_T$$

$$\alpha = 6 \times 10^{-6}/°\text{F}$$

This design assumes cold climate conditions.

Procedure A is used for temperature range between extreme design temperatures (LRFD Article 3.12.2.1):

$$\Delta_T = T_{max} - T_{min} = 80 - 0 = 80\ °\text{F}$$

$$\rightarrow \Delta L_{Thermal} = 0.75 \times 79.789\ ft\left(\frac{12\ in}{ft}\right) \times (6 \times 10^{-6}/°\text{F}) \times 80\ °\text{F} = 0.345\ in$$

10.2.3.3 *Time Dependent Deformation*

The process for determining time-dependent deformation includes calculating the prestressing strand shortening due to prestress losses, then using strain compatibility to determine the corresponding change in length at the girder bottom flange-to-bearing interface.

The following formula is used to calculate the prestressing strand shortening from the time of transfer to deck placement. It is assumed that two-thirds of the deformation occurs between prestress release and girder erection, and the remaining one-third occurs between girder erection and deck placement:

$$\Delta L_{ten-cr} = -\frac{1}{3} \times \frac{\Delta f_p \times \mathrm{L}}{E_{ps}}$$

$$E_{ps} = 28500\ ksi$$

From PCI BDM Eq. 10.8.3.8.2-6, the following formula is used to determine the corresponding bottom flange shortening:

$$\Delta L_{bf} = \frac{\left(1 + \frac{e_p y_b}{r^2}\right)}{\left(1 + \frac{e_p^2}{r^2}\right)} (\Delta L_{ten}), \qquad where\ r = \sqrt{\frac{I_{xx}}{A_g}} = \sqrt{\frac{734356.0 in^4}{923.531 in^2}} = 28.199\ in$$

$$\rightarrow \frac{\left(1 + \frac{e_p y_b}{r^2}\right)}{\left(1 + \frac{e_p^2}{r^2}\right)} = \frac{\left(1 + \frac{15.848\ in \times 35.779\ in}{(28.199 in)^2}\right)}{\left(1 + \frac{(15.848\ in)^2}{(28.199\ in)^2}\right)} = 1.30188$$

Creep:

$$\Delta f_{pCR} = -14.327 ksi$$

$$\Delta L_{ten-cr} = \frac{1}{3} \times \frac{14.327 ksi \times 79.789\ ft}{28500\ ksi} \left(\frac{12\ in}{ft}\right) = -0.155\ in$$

$$\rightarrow \Delta L_{bf-cr} = 1.30188 \times -0.155\ in = -0.202\ in$$

Shrinkage:

$$\Delta f_{pSH} = -5.022 ksi$$

$$\Delta L_{ten-sr} = \frac{1}{3} \times \frac{5.022 ksi \times 79.789\ ft}{28500\ ksi} \left(\frac{12\ in}{ft}\right) = -0.062\ in$$

$$\rightarrow \Delta L_{bf-sh} = 1.30188 \times -0.062\ in = -0.080\ in$$

Relaxation:

$$\Delta f_{pR1} = -1.007 ksi$$

$$\Delta L_{ten-r1} = \frac{1}{3} \times \frac{1.007ksi \times 79.789\ ft}{28500\ ksi}\left(\frac{12\ in}{ft}\right) = -0.013\ in$$

$$\rightarrow \Delta L_{bf-r1} = 1.30188 \times -0.013\ in = -0.017\ in$$

10.2.3.4 *Total Shear Deformation*

$$\Delta_s = -0.345" - 0.202" - 0.080" - 0.017" = -0.644"$$

10.3 Design Parameters

The loads and movements calculated above are included in the PGSuper Bearing Design Parameters report. The remaining calculations in this example are used by the BEToolbox BrgCalc application, for designing the bearing.

Elastomer stiffness, G = 165 psi

Movement is free in both the transverse direction, and the longitudinal direction

Try:

Rectangular bearing @ L = 8", W=20"

2 elastomer layers, 3 steel shims

Elastomer thickness: ½"

Steel thickness: 14-gage = 0.075"

$$A = 8in \times 20\text{in} = 160\ in^2$$

$$static\ stress, \sigma_{st} = \frac{P_D}{A} = \frac{215.60\text{kip}}{160\ \text{in}^2} = 1.35\ \text{ksi}$$

$$cyclic\ stress, \sigma_{cy} = \frac{50.51\ \text{kips}}{160\ in^2} = 0.316\ ksi$$

$$total\ service\ limit\ state\ stress, \sigma_s = \frac{215.60\ \text{kips} + 50.51\ \text{kips}}{160\ in^2} = 1.663\ ksi$$

$$Shape\ Factor, S = \frac{A}{2 \times h_{ri} \times (L + W)} = \frac{160\ in^2}{2 \times 0.5in \times (8in + 20in)} = 5.71$$

10.4 Layer Thickness Check

10.4.1 Steel Shim Thickness (LRFD 14.7.5.3.5)

Minimum for fabrication (Article 4.5, AASHTO M 251):

0.075in > 0.0625in OK

Minimum for Service Limit State:

$$h_{s,\ service} = 3 \times\ h_{ri}\ \times\ \frac{\sigma_s}{f_y} = 3 \times 0.5in \times \frac{1.663ksi}{36.0ksi} = 0.069in < 0.075in \text{ OK}$$

Minimum for Fatigue Limit State:

$$h_{s,\ fatigue} = 2 \times\ h_{ri}\ \times\ \frac{\sigma_{cy}}{f_{TH}} = 2 \times 0.5in \times \frac{0.316ksi}{24.0ksi} = 0.013\text{in} < 0.075in \text{ OK}$$

10.4.2 Elastomer Thickness (LRFD 14.7.5.3.2-1)

$2 \times \Delta_{s-st} = 2 \times 0.644in = 1.288in < 1.5in$ OK

10.5 Combined Shear Strain Check (LRFD 14.7.5.3.3)

Method B considers the combined shear strain due to axial force, rotation, and displacement.

Compressibility Index, $\lambda = \mathrm{S} \times \sqrt{3 \times \mathrm{G/K}} = 5.71\sqrt{3 \times 0.165\text{ksi}/450\text{ksi}} = 0.190$

$$\mathrm{d_{a1}} = 1.06 + 0.210(0.190) + 0.413(0.190)^2 = 1.11$$
$$\mathrm{d_{a2}} = 1.506 - 0.071(0.190) + 0.406(0.190)^2 = 1.507$$
$$\mathrm{d_{a3}} = -0.315 + 0.195(0.190) - 0.047(0.190)^2 = -0.280$$

$$0.5h_{ri}\ =\ 0.5\ \times 0.5\text{in}\ =\ 0.25\text{in}$$
$$h_c = 0.25\text{in}$$
$$\rightarrow 0.25\text{in} \geq\ 0.25\text{in}\ \therefore\ \eta\ =\ 1$$

Axial shear strain coefficient:

Primary direction:

$$\mathrm{d_{a2}} +\ \ \mathrm{d_{a3}} \times \frac{\mathrm{L}}{\mathrm{W}} = 1.507 + (-0.280) \times \frac{8}{20} = 1.395 > 1.11\ \therefore\ \mathrm{D_a} = 1.395$$

Secondary direction:

$$\mathrm{d_{a2}} +\ \ \mathrm{d_{a3}} \times \frac{\mathrm{W}}{\mathrm{L}} = 1.507 + (-0.280) \times \frac{20}{8} = 0.807 < 1.11\ \therefore\ \mathrm{D_a} = 1.11$$

Rotational shear strain coefficient:

Primary direction:

$$D_r = \frac{1.552\ - 0.627\lambda}{2.233 + 0.156\lambda + \frac{L}{W}} = \frac{1.552\ - 0.627 \times 0.190}{2.233 + 0.156 \times 0.190 + \frac{8.0}{20.0}} = 0.540 > 0.5$$
$$\therefore\ \mathrm{D_r} = 0.5$$

Secondary direction:

$$D_r = \frac{1.552\ - 0.627\lambda}{2.233 + 0.156\lambda + \frac{W}{L}} = \frac{1.552\ - 0.627 \times 0.190}{2.233 + 0.156 \times 0.190 + \frac{20.0}{8.0}} = 0.302 < 0.5$$
$$\therefore\ \mathrm{D_r} = 0.302$$

Static Axial Shear Strain:

Primary direction:

$$\gamma_{a,st} = \frac{D_a \times \sigma_{st}}{G \times S} = \frac{1.395 \times 1.35\ ksi}{0.165\ ksi \times 5.71} = 1.994\ \text{in/in} < 3.0\ OK$$

Secondary direction:

$$\gamma_{a,st} = \frac{D_a \times \sigma_{st}}{G \times S} = \frac{1.11 \times 1.35\ ksi}{0.165\ ksi \times 5.71} = 1.593\ \text{in/in} < 3.0\ OK$$

Cyclic Axial Shear Strain:

Primary direction:

$$\gamma_{a,cy} = \frac{D_a \times \sigma_{cy}}{G \times S} = \frac{1.395 \times 0.316\ ksi}{0.165\ ksi \times 5.71} = 0.467\ in/in$$

Secondary direction:

$$\gamma_{a,cy} = \frac{D_a \times \sigma_{cy}}{G \times S} = \frac{1.11 \times 0.316\ ksi}{0.165\ ksi \times 5.71} = 0.373\ in/in$$

Static Rotational Shear Strain:

Primary Direction:

$$\gamma_{r,st} = \frac{D_r \times \left(\frac{L}{h_{ri}}\right)^2 \times \theta_{st}}{n + \eta} = \frac{0.5 \times \left(\frac{8.0\text{in}}{0.5\text{in}}\right)^2 \times 0.01174\text{rad}}{2 + 1} = 0.501\frac{\text{in}}{\text{in}}$$

Secondary Direction:

-Shear strain due to rotation in the secondary direction is based upon 0.01 radian-out-of-plumb tolerance:

$$\gamma_{r,st} = \frac{D_r \times \left(\frac{W}{h_{ri}}\right)^2 \times 0.01\ \text{rad}}{n + \eta} = \frac{0.302 \times \left(\frac{20.0\text{in}}{0.5\text{in}}\right)^2 \times 0.01\text{rad}}{2 + 1} = 1.60\frac{\text{in}}{\text{in}}$$

Cyclic Rotational Shear Strain:

Primary Direction:

$$\gamma_{r,cy} = \frac{D_r \times \left(\frac{L}{h_{ri}}\right)^2 \times \theta_{cy}}{n + \eta} = \frac{0.5 \times \left(\frac{8.0\text{in}}{0.5\text{in}}\right)^2 \times 0.00303\text{rad}}{2 + 1} = 0.129\ \frac{\text{in}}{\text{in}}$$

Secondary Direction:

$$\gamma_{r,cy} = 0$$

Static Displacement Shear Strain:

Primary Direction:

$$\gamma_{s,st} = \frac{\Delta_s}{h_{rt}} = \frac{0.644\ in}{1.5\ in} = 0.429\frac{\text{in}}{\text{in}}$$

Secondary Direction:

$$\gamma_{s,st} = 0 \text{ (all displacement is considered in the primary direction)}$$

Cyclic Displacement Shear Strain:

Primary Direction:

$$\gamma_{s,cy} = 0 \text{ (no displacement caused by live loads)}$$

Secondary Direction:

$$\gamma_{s,cy} = 0$$

Combined shear strain:

$$\left(\gamma_{a,st} + \gamma_{r,st} + \gamma_{s,st}\right) + 1.75\left(\gamma_{a,cy} + \gamma_{r,cy} + \gamma_{s,cy}\right) < 5.0$$

Primary direction:

$$(1.99 + 0.500 + 0.429) + 1.75(0.467 + 0.129 + 0) = 3.97 < 5.0\ OK$$

Secondary direction:

$$(1.593 + 1.60 + 0) + 1.75(0.373 + 0 + 0) = 3.85 < 5.0\ OK$$

10.6 Check For Stability (LRFD 14.7.5.3.4)

Primary Direction:

Translation is free ∴ $K_{eff} = 2.0$

$$\sigma_{s,stab,max} = \frac{G \times S}{K_{eff} \times A - B}$$

$$A = \frac{1.92h_{rt}}{L\sqrt{1 + 2\left(\frac{L}{W}\right)}} = \frac{1.92(1.5in)}{8in\sqrt{1 + 2\left(\frac{8in}{20in}\right)}} = 0.268$$

$$B = \frac{2.67}{(S + 2)\left(1 + \frac{L}{4W}\right)} = \frac{2.67}{(5.71 + 2)\left(1 + \frac{8in}{4 \times 20in}\right)} = 0.315$$

$$\sigma_{s,stab,max} = \frac{0.165ksi \times 5.71}{2.0 \times 0.268 - 0.315} = 4.247\ ksi > 0$$

$$1.66\ ksi < 4.247\ ksi\ OK$$

Secondary Direction:

Translation is free ∴ $K_{eff} = 2.0$

$$A = \frac{1.92h_{rt}}{W\sqrt{1 + 2\left(\frac{W}{L}\right)}} = \frac{1.92(1.5in)}{20in\sqrt{1 + 2\left(\frac{20in}{8in}\right)}} = 0.0588$$

$$B = \frac{2.67}{(S+2)\left(1+\frac{W}{4L}\right)} = \frac{2.67}{(5.71+2)\left(1+\frac{20in}{4\times 8in}\right)} = 0.213$$

$$\rightarrow \frac{0.165ksi \times 5.71}{2.0 \times 0.0588 - 0.213} = -9.88\ ksi < 0\ \therefore \text{Does not apply}$$

10.7 Restraint System Requirement (LRFD 14.7.5.4)

Since the bearing doesn't have externally bonded plates, a check is needed for the applicability of a restraint system for horizontal movement.

Elastomer Elastic Modulus using Method B:

$$E_B = 6 \times G \times S^2 = 6 \times 0.165\ ksi \times 5.71^2 = 32.33\ ksi$$

$$\frac{(\theta_{st} + 1.75\theta_{cy}) \times S \times E_B}{3(n+\eta)(\sigma_{st} + 1.75\sigma_{cy})} = \frac{(0.01174rad + 1.75 \times 0.00303rad) \times 5.71 \times 32.33ksi}{3(2+1)(1.34\ ksi + 1.75 \times 0.316\ ksi)}$$

$$= 0.184 < 1\ \therefore \text{No } Retraint\ System\ Required$$

10.8 Bearing Pad Slip Check

Horizontal force induced by shear deformation:

$$F_{horiz} = \frac{G \times A \times \Delta_s}{h_{rt}} = \frac{0.165\ ksi\ \times 160.0in^2 \times 0.644in}{1.5\ in} = 11.33\ kips$$

Resisting friction force:

$P_r = \mu P_D$

$\mu = 0.20\ (C14.8.3.1)$

$\rightarrow P_r = 0.20 \times 215.6\ kip = 43.12\ kip$

$$11.33\ kip < 43.12\ kip \text{ OK}$$

10.9 Compressive Deflection (LRFD 14.7.5.3.6)

10.9.1 Initial Dead Load Deflection

AASHTO Method B does not provide a limitation for dead load deflections. Engineering judgment should be used to determine the appropriate limit for dead load deflection.

$$\delta_{D-initial} = \frac{P_D \times h_{rt}}{A \times E_B} = \frac{215.6\ kip\ \times 1.5in}{160.0\ in^2 \times 32.33\ ksi} = 0.063\ in$$

10.9.2 Instantaneous Live Load Deflection

$$\delta_L = \frac{P_L \times h_{rt}}{A \times E_B} = \frac{50.51\ kip\ \times 1.5in}{160.0\ in^2 \times 32.33\ ksi} = 0.015\ in < 0.125\ in\ OK$$

The 0.125 in limit is not required but is suggested in the LRFD Commentary.

11 Software

PGSuper is precast-prestressed girder design, analysis, and load rating software. PGSuper is part of the BridgeLink Bridge Engineering Application Suite jointly developed by the Washington State and Texas Departments of Transportation.

Download from http://www.wsdot.wa.gov/eesc/bridge/software

This design example is based on version 8.0.

12 References

1. AASHTO, *LRFD Bridge Design Specifications*, Ninth Edition 2020, American Association of State Highway and Transportation Officials, Washington, D.C., 2020
2. Brice, R., Khaleghi, B., Seguirant, S., "Design optimization for fabrication of pretensioned concrete bridge girders: An example problem", PCI JOURNAL, Prestressed Concrete Institute, Chicago, IL, Vol. 54, No. 4, Fall 2009, pp.73-111
3. Brice, R. "Designing Precast, Prestressed Concrete Bridge Girders for Lateral Stability: An Owner's Perspective", Aspire, (PCI) Winter 2018, pp.10-12
4. PCI (Precast/Prestressed Concrete Institute). 2016. *Recommended Practice for Lateral Stability of Precast, Prestressed Concrete Bridge Girders.* CB-02-16-E. Chicago, IL: PCI
5. PCI, *Precast Prestressed Concrete Bridge Design Manual*, Vol 1 & 2, Precast Concrete Institute, Chicago, Illinois, 1997
6. Seguirant, S. J., "New Deep WSDOT Standard Sections Extend Spans of Prestressed Concrete Girders," PCI JOURNAL, Prestressed Concrete Institute, Chicago, IL, Vol. 43, No. 4, July-August 1998, pp. 92-119
7. Seguirant, S. J., R. Brice, and B. Khaleghi. 2005, "Flexural Strength of Reinforced and Prestressed Concrete T-Beams," PCI JOURNAL, Prestressed Concrete Institute, Chicago, IL, Vol. 50, No. 1, January-February 2005, pp. 44-73.
8. Dornsife, R., "LRFD Design of Common Bridge Elements: Decks and Bearings, Lesson 3: Design of Elastomeric Bearings", NHI Course Number 130081C.
9. WSDOT, *Bridge Design Manual*, Washington State Department of Transportation
10. WSDOT, *PGSuper Technical Guide*, Washington State Department of Transportation