NW-ACPA / WSDOT
Minutes for Monday, April 21, 2014 Meeting

Day/Time: **Monday, April 21, 2014, 10:00 AM – 12:00 Noon**

Location: **WSDOT Cle Elum Maintenance Conference Room, I-90 Exit 80**

Attendees:

David Jones, WSDOT	Jim Allen, ACME	Darrel McCallum, WSDOT
Jim Powell, NW ACPA	Johnnie Zabel, Salinas	Mark Russell, WSDOT
Dave Erickson,WSDOT	Jeff Uhlmeyer, WSDOT	

Next NW-ACPA Meetings Dates:
Date: October 6, 2014 Location: at WSDOT Cle Elum Maintenance Conference Room, I-90 Exit 80, 10:00 AM to 12:00 Noon.

Meeting Minutes available on line at:
http://www.wsdot.wa.gov/Business/Construction/MeetingMinutes.htm

New Business:

Air in rapid setting concrete used for fast track Panel Replacements. - Johnnie Zabel

Per 5-01.3(1)A2 Portland Cement Concrete says '*…air entrained with a design air content of 5.5 percent'.* 5-01.3(1)A Concrete Mix Designs allows the use of patching materials. Patching materials generally are either mixed in a small mixer or a volumetric truck style mixer. In small mixers you do not add air to the mix. These styles of mix design are very "high slump", they still meet the water cement ratio but are what most would call wet. There is not WSDOT guidelines to test this style of mix designs for air. In a few project we performed this last year there was controversy between contractor/Redi-Mix supplier/WSDOT on how to perform testing. Generally these mixes are low air, they are so high slump that they are unable to hold air. These mix design also are very high strength generally 10,000 - 14,000 psi. I would like to discuss eliminating the use of air in this style of mix designs.

4/21/2014 – The discussion centered on the need for air in these higher preforming mixes. These mixes come to the job site or are mixed with mobile mixers with high slump, but set rapidly. It is difficult to get air into these mixes. The currently don't fit under the 9-20 standard specification and are there for treated as a concrete mix. It was suggested that they behave more like a SCC mix than a conventional concrete mix. It was suggested that the WSDOT should consider not having air requirement if the Mix design indicates good freeze/thaw resistance per ASTM C 666. It was also suggested that we look at using

WSDOT Test Method T 818 Air Content of Freshly Mixed Self-compacting Concrete by pressure method.

Action Item: Jim Powel agreed to look into this and come back with a proposal.

Stringless/laser control for slip-forming Johnnie Zabel

Section 5-05.3(7)A **Slip-Form Construction** is kind of bland on this issue. As of now it says "*The alignment and elevation of the paver shall be regulated form outside reference lines establish for this purpose".* With todays advancement in slip-form paving the move to laser/stringless controls need to be addressed. I would propose something like this.
"***If the Contractor proposes to use any type of automatic laser controls, submit a detailed description of the system and perform a trial field demonstration in the presence of the Engineer at least one week prior to start of paving. Approval of the control system will be based on the results of the demonstration and on continuing satisfactory operation during paving***."

4/21/2014 – Johnnie Zabel of Salinas Construction reported that they completed a one hundred percent string less job by change order. They used a Leica product. They basically generated a 3 D model of the job, set up two total stations that sent information to the paver, and used GPS rovers behind the paver as a check. The project was 500 foot section of flat ground. Jim Powell noted that the industries uses laser screeds to produce super flat floors fast.

Alternate material for the installation of dowel bars and tiebars in existing PCCP – Robert Seghetti

4/21/2014 – Jim Allen of ACME Paving brought samples of and discussed using AMBEX Cementitious Anchoring Capsule for tie bars and dowels. This is a dry pre-mixed cement grout that is contained in a water permeable wrapping. Once the grout capsule is saturated in water it becomes a fast setting grout. The system was reported as being used in Minnesota, New York and Idaho. It was suggested that we contact Mark Gaines, The Bridge Construction Engineer to see if the structural side of the house had any experience with the system. Mark's comments were " I am not familiar with Ambex AAC and don't believe we have ever used a product like this for bridge or structure applications. Based on the data sheet, it seems like a good product with documented pull-out capacities. While you aren't looking for pull-out capacity, a high pull-out capacity provides some indication that the hole has been completely filled with a high-quality material.

A couple things that could be concerns. I would imagine that dowel bars see considerable cyclic loading as heavy vehicles pass over the joints. I'd have some concern that this product would

not hold up as well as an epoxy to repeated cyclic loading over a number of years. Cementitious products are likely more brittle and less pliable than epoxy-based product. The other thing you may want to look at is whether this product is suitable for horizontal anchoring like you would have with dowel bars. The data sheet doesn't identify if this is appropriate for only downward vertical anchors or if it works for horizontal anchors. Epoxy product data sheets are usually very specific with respect to what applications that are suitable for.

I have not heard anything about 9-20 products bonding better to dry surfaces. However, I very quickly took a look at three of the products covered by QPL 9-20.2 (SikaQuick 2500, Tamms Express Repair and Quikrete FastSet DOT Mix). All three of these products require saturated surface dry conditions before placement. I assume the other products do as well, but I didn't check. From my experience, we would always rely on following the manufacturer's recommendations for proprietary products like these. Deviating from these recommendations could product a product that doesn't achieve the properties identified in the data sheets. If there is research on this, could you have NW-ACPA forward it on to us/me?"

Action Item: Jeff Uhlmeyer to check with other states and then possibly look for a job to try them on.

Old Business:

Smoothness requirements for PCCP rehabilitation

10/7/2013 – The bid item under section 5-05.5 "Ride Smoothness Compliance Adjustment" was recently placed in a PCCP grinding project (section 5-01). This created an issue in that the adjustment is calculated by multiplying the unit contract price for cement concrete pavement, times the volume of concrete, times the Ride Smoothness Profile index. The problem is that we pay for grinding by the square yard not cubic yards. Currently we wouldn't pay an incentive for grinding. The question was asked if we should pay an incentive for grinding. It was concluded that the small panel replacements were not a big deal and would not be considered for incentive. Jim Powell pointed out the International Grooving and Grinding Association (IGGA) is working on a smoothness specification. Jim Powell said he will see if he can get a copy and send it out to the group.

4/21/2014 – Jim reported that the IGGA Specifications were not available yet. The Departments van is being equipped with a line laser that should take out any variability due to tinning. There are two ways to go about smoothness specifications absolute or percent improvement. The Department uses three different schedules of pay factors for the smoothness of HMA. IRI can vary depending on the time of the day. You can use a lightweight vehicle or a Ride Van. Contractors prefer to have the information collected by the Ride Van when bidding. The walk through worked well on a recent project. Having the ability to get out and look at the road with traffic control in place is great.

Action Item: Jim Powell to get a copy of the IGGA smoothness Specifications.

<u>Time of placement for end dump trucks needs to be extended to match those requirements in 6-02.3(4)D.</u>

4/15/2013 – The time constraint is in Section 5-05.3(3)B. This specification allows the concrete to be delivered to the job site in nonagitator trucks provided it is fully discharged no later than 45 minutes after the introduction of mixing water to the cement and aggregates. Section 5-05.3(8)C, states that when a pour is discontinued for more than 45 minutes a transverse construction joint shall be installed. The goal is to insure the concrete is plastic enough when placed to prevent a cold joint from forming. The real issue is not the time in the nonagitator truck but the travel distance. The longer you travel the more likely you are going to have segregation, caused by vibration of the concrete. It was asked if a conveyor system between the truck and the paving machine would remix the concrete. There are some screws in the hopper to move the material, but they were not meant to remix the concrete. It was decided that the Industry would come back with a proposal for change to the time limit.

10/7/2013 - Wisconsin has developed a specification that Jim Powell handed out. This specification is based on concrete temperature at the time of placement. It suggests that you could place concrete pavement up to 60 minutes after batching when a retarder is used. ACPA has no guide lines on this issue. It was noted that we would rarely have a problem placing concrete within 60 minutes.

<u>The requirement for that the asphalt surface temperature not exceed 90ºF needs to be examined. It was believed that this relates to placing concrete pavement over the top of recently placed Hot mix Asphalt (HMA) and that the temperature of the HMA should cool down to 90ºF before the concrete is placed.</u>

4/15/2013 – The group wasn't sure there is a problem here, there are options paving at night, or using water to cool down the surface temperature. Pavecool was mentioned as a tool that can be used to predict HMA pavement cooling rates. The concern is with early age cracking. Jim Powell and Jeff Uhlmeyer agreed to use HIPERPAV and determine if we are being too conservative.

10/7/2013 – It was suggested that we use HIPERPAV to analyze and allow increases in temperature. It was noted that the risk of cracking is from the bottom up. It is basically a strength gain vs. shrinkage issue. We rarely see pavement cracking outside the contraction joints. The HMA acts as a heat sink. HIPERPAV would allow for condition specific temperatures to be utilized. Kurt suggested using the standard specification temperature of 90° F and allow for

HIPERPAV to be utilized to demonstrating that a higher temperature could be allowed. Jim and Jeff will demonstrate HIPERPAV at our next meeting.

Action Item: Jim Powell and Jeff Uhlmeyer prepare a demonstration of HIPERPAV

4/21/2014 – We were not able to demonstrate the HIPERPAV program as does run on Windows 7 .0 or 8.1

Spall repairs within 6 inches of dowel bars.

10/3/2011- The Department was asked to reconsider the specification that does not allow a patch within six inches of dowel bar.

4/16/2012- The Department express concerns with patches within six inches of the dowel bar. The industry representatives did not see a concern with spall repairs closer to the dowel bars and felt the real issue was in the definition of what a spall repair was. The industry will work with WSDOT to better define spall repair.

10/1/2012 – Nothing to report on this item.

4/15/2013 – The discussion centered on the concrete cover needed to transfer loads across the dowel bar joints. It was mentioned that there is research available that suggest that you need at least 3 inches of concrete cover to transfer the loads. Jim Powell agreed to pass that information along for consideration.

10/7/2013 – Jim Powell said that since bars are ok anywhere in the middle third and we need three inches of cover above the bar, based on research. On a 12 inch slab the bars could be within four inches of the surface and with a three inch cover requirement you could allow a one inch spall repair over the bars.

Thickness deficiency

10/7/2013 – Jim Powell pointed out that the adjustment for thickness deficiency is extreme. Standard Specification Section 5-05.5(1)B, ***Thickness Deficiency of More than 0.05 Foot*** *requires that the area of the deficient thickness be identified. Then if the Engineer allows the deficient panels may be allowed to remain, but they would not be paid for plus a further penalty is assessed in the amount of 25 percent of the Contractor's unit bid price for the panels. The Contractor would also be responsible to pay for all the cores required to determine the area of the deficiency. It was suggested that we use some sort of life cycle cost to determine the appropriate amount to reduce the payment for the deficient pavement thickness.*

4/21/2014- Jim looked into design life versus pavement thickness and determined that at 150 million ESAL's you need about 9.5 inches of pavement thickness to achieve a 50 year design life. If you add a one inch for future diamond grind and discount the top ½ inch that brings you to 11 ½ inches. That leaves ½ inch or 0.04 feet, right about were the specification is. Jim could not come with anything else but suggested looking at using a statistical acceptance, Percent within Limits PWL.

NW-ACPA / WSDOT Meeting Minutes
Monday, October 20, 2014 10:00 AM – 12:00 Noon
WSDOT Cle Elum Maintenance Conference Room, I-90 Exit 80

Present	Name	Company	Present	Name	Company	Present	Name	Company
X	Dyer, Bob	WSDOT	X	Larson, Larry	WSDOT	X	Seghetti, Robert	Acme
	Davari, Moe	WSDOT	X	Pipinich, Bob	GMCC	X	Uhlmeyer, Jeff	WSDOT
X	Erickson, Dave	WSDOT		Powell, Jim	NW ACPA		Williams, Kurt	WSDOT
X	Jones, Dave	WSDOT	X	Russell, Mark	WSDOT	X	Zabel, Johnnie	Salinas

Old Business:

11-01 Spall repairs within 6 inches of dowel bars.

10/3/2011- The Department was asked to reconsider the specification that does not allow a patch within six inches of dowel bar.

4/16/2012- The Department express concerns with patches within six inches of the dowel bar. The industry representatives did not see a concern with spall repairs closer to the dowel bars and felt the real issue was in the definition of what a spall repair was. The industry will work with WSDOT to better define spall repair.

10/1/2012 – Nothing to report on this item.

4/15/2013 – The discussion centered on the concrete cover needed to transfer loads across the dowel bar joints. It was mentioned that there is research available that suggest that you need at least 3 inches of concrete cover to transfer the loads. Jim Powell agreed to pass that information along for consideration.

10/7/2013 – Jim Powell said that since bars are ok anywhere in the middle third and we need three inches of cover above the bar, based on research. On a 12 inch slab the bars could be within four inches of the surface and with a three inch cover requirement you could allow a one inch spall repair over the bars.

10/20/2014 - It was agreed that the issue is not with retrofit jobs, but rather with spalls near dowel bars on new construction. It was also agreed that Jim Powell should report back at the next meeting on national best practices for patching new PCCP in the proximity of dowel bars.

13-01 Time of placement for end dump trucks needs to be extended to match 6-02.3(4)D.

4/15/2013 – The time constraint is in Section 5-05.3(3)B. This specification allows the concrete to be delivered to the job site in nonagitator trucks provided it is fully discharged no later than 45 minutes after the introduction of mixing water to the cement and aggregates. Section 5-05.3(8)C, states that when a pour is discontinued for more than 45 minutes a transverse construction joint shall be installed. The goal is to insure the concrete is plastic enough when placed to prevent a cold joint from forming. The real issue is not the time in the nonagitator truck but the travel distance. The longer you travel the more likely you are going to have segregation, caused by vibration of the concrete. It was asked if a conveyor system between the truck and the paving machine would remix the concrete. There are some screws in the hopper to move the material, but they were not meant to remix the concrete. It was decided that the Industry would come back with a proposal for change to the time limit.

10/7/2013 - Wisconsin has developed a specification that Jim Powell handed out. This specification is based on concrete temperature at the time of placement. It suggests that you could place concrete pavement up to 60 minutes after batching when a retarder is used. ACPA has no guide lines on this issue. It was noted that we would rarely have a problem placing concrete within 60 minutes.

10/20/2014 – It was agreed that the next step to move this issue forward is for Industry to propose spec changes. WSDOT was inclined to like the example from Wisconsin provided at the last meeting. It allows added time for placement (1) if the temperature (concrete or air?) is below a specified temperature or (2) if a set retarder is approved in the mix design.

13-02 The requirement for that the asphalt surface temperature not exceed 90ºF needs to be examined. It was believed that this relates to placing concrete pavement over the top of recently placed Hot mix Asphalt (HMA) and that the temperature of the HMA should cool down to 90ºF before the concrete is placed.

4/15/2013 – The group wasn't sure there is a problem here, there are options paving at night, or using water to cool down the surface temperature. Pavecool was mentioned as a tool that can be used to predict HMA pavement cooling rates. The concern is with early age cracking. Jim Powell and Jeff Uhlmeyer agreed to use HIPERPAV and determine if we are being too conservative.

10/7/2013 – It was suggested that we use HIPERPAV to analyze and allow increases in temperature. It was noted that the risk of cracking is from the bottom up. It is basically a strength gain vs. shrinkage issue. We rarely see pavement cracking outside the contraction joints. The HMA acts as a heat sink. HIPERPAV would allow for condition specific temperatures to be utilized. Kurt suggested using the standard specification temperature of 90° F and allow for HIPERPAV to be utilized to demonstrating that a higher temperature could be allowed. Jim and Jeff will demonstrate HIPERPAV at our next meeting. Action Item: Jim Powell and Jeff Uhlmeyer prepare a demonstration of HIPERPAV.

4/21/2014 – We were not able to demonstrate the HIPERPAV program.

10/20/2014 - It was stated that HIPERPAVE is not useful at this time. It was noted that the 2012 Standard Specifications required that asphalt treated base temperature shall not exceed 90˚F and the 2014 Standard Specifications no longer has this requirement. Dave Erickson agreed to review WSDOT records to find out why the maximum temperature of the underlying asphalt treated base was deleted in the 2014 spec book. Industry indicated it would prefer to manage the risk for cracking caused by warm underlying asphalt treated base without a contractually mandated maximum temperature of the underlying asphalt base material.

13-03 Smoothness requirements for PCCP rehabilitation

10/7/2013 – The bid item under section 5-05.5 "Ride Smoothness Compliance Adjustment" was recently placed in a PCCP grinding project (section 5-01). This created an issue in that the adjustment is calculated by multiplying the unit contract price for cement concrete pavement, times the volume of concrete, times the Ride Smoothness Profile index. The problem is that we pay for grinding by the square yard not cubic yards. Currently we wouldn't pay an incentive for grinding. The question was asked if we should pay an incentive for grinding. It was concluded that the small panel replacements were not a big deal and would not be considered for incentive. Jim Powell pointed out the International Grooving and Grinding Association (IGGA) is working on a smoothness specification. Jim Powell said he will see if he can get a copy and send it out to the group.

4/21/2014 – Jim reported that the IGGA Specifications were not available yet. The Departments van is being equipped with a line laser that should take out any variability due to tinning. There are two ways to go about smoothness specifications absolute or percent improvement. The Department uses three different schedules of pay factors for the smoothness of HMA. IRI can vary depending on the time of the day. You can use a lightweight vehicle or a Ride Van. Contractors prefer to have the information collected by the Ride Van when bidding. The walk through worked well on a recent project. Having the ability to get out and look at the road with traffic control in place is great. Action Item: Jim Powell to get a copy of the IGGA smoothness Specifications.

10/20/2014 – The IGGA smoothness spec is still not published. Contractors did not support using IRI for smoothness. They prefer the California Profilograph (CP) for measurements. Dave Erickson said he is drafting a new smoothness specification using IRI and that it will likely be sent to industry committee members for comment before our next meeting.

13-04 Thickness deficiency

10/7/2013 – Jim Powell pointed out that the adjustment for thickness deficiency is extreme. Standard Specification Section 5-05.5(1)B, Thickness Deficiency of More than 0.05 Foot requires that the area of the deficient thickness be identified. Then if the Engineer allows the deficient panels may be allowed to remain, but they would not be paid for plus a further penalty is assessed in the amount of 25 percent of the Contractor's unit bid price for the panels. The Contractor would also be responsible to pay for all the cores required to determine the area of the deficiency. It was suggested that we use some sort of life cycle cost to determine the appropriate amount to reduce the payment for the deficient pavement thickness.

4/21/2014- Jim looked into design life versus pavement thickness and determined that at 150 million ESAL's you need about 9.5 inches of pavement thickness to achieve a 50 year design life. If you add a one inch for future diamond grind and discount the top ½ inch that brings you to 11 ½ inches. That leaves ½ inch or 0.04 feet, right about were the specification is. Jim could not come with anything else but suggested looking at using a statistical acceptance, Percent within Limits PWL.

10/20/2014 - While this specification seems to be a bit heavy on the penalty, industry did not see a need to change at this time. This issue is closed for now.

14-01 Air in rapid setting concrete used for fast track Panel Replacements

April 21, 2014 - Per 5-01.3(1)A2 Portland Cement Concrete says '…air entrained with a design air content of 5.5 percent'. 5-01.3(1)A Concrete Mix Designs allows the use of patching materials. Patching materials generally are either mixed in a small mixer or a volumetric truck style mixer. In small mixers you do not add air to the mix. These styles of mix design are very "high slump", they still meet the water cement ratio but are what most would call wet. There is not WSDOT guidelines to test this style of mix designs for air. In a few project we performed this last year there was controversy between contractor/Redi-Mix supplier/WSDOT on how to perform testing. Generally these mixes are low air, they are so high slump that they are unable to hold air. These mix design also are very high strength generally 10,000 - 14,000 psi. I would like to discuss eliminating the use of air in this style of mix designs. The discussion centered on the need for air in these higher preforming mixes. These mixes come to the job site or are mixed with mobile mixers with high slump, but set rapidly. It is difficult to get air into these mixes. The currently don't fit under the 9-20 standard specification and are there for treated as a concrete mix. It was suggested that they behave more like a SCC mix than a conventional concrete mix. It was suggested that the WSDOT should consider not having air requirement if the Mix design indicates good freeze/thaw resistance per ASTM C 666. It was also suggested that we look at using WSDOT Test Method T 818 Air Content of Freshly Mixed Self-compacting Concrete by pressure method. Action Item: Jim Powel agreed to look into this and come back with a proposal.

10/20/2014 - A consistent approach to testing or accepting air content is needed. Johnnie Zabel stated that PE offices are not consistent in whether to test, and in the method of the testing of the rapid setting concrete used in panel replacements. Dave Jones stated that with the high strength of the concrete that the air content may not be important. We may want to accept by a certification and not require air content testing. Dave Jones will look in to.

14-02 Stringless/laser control for slip-forming

April 21, 2014 Section 5-05.3(7)A Slip-Form Construction is kind of bland on this issue. As of now it says "The alignment and elevation of the paver shall be regulated form outside reference lines establish for this purpose". With todays advancement in slip-form paving the move to laser/stringless controls need to be addressed. I would propose something like this. "If the Contractor proposes to use any type of automatic laser controls, submit a detailed description of the system and perform a trial field demonstration in the presence of the Engineer at least one week prior to start of paving. Approval of the control system will be based on the results of the demonstration and on continuing satisfactory operation during paving." Johnnie Zabel of Salinas Construction reported that they completed a one hundred percent string less job by change order. They used a Leica product. They basically generated a 3 D model of the job, set up two total stations that sent information to the paver, and used GPS rovers behind the paver as a check. The project was 500 foot section of flat ground. Jim Powell noted that the industries uses laser screeds to produce super flat floors fast.

10/20/2014 – It was suggested that stringless technology be allowed by the specifications. WSDOT seemed to have no objection. Bob Dyer will provide a draft of the change before the next meeting.

14-03 Alternate material for the installation of dowel bars and tiebars in existing PCCP

4/21/2014 – Jim Allen of ACME Paving brought samples of and discussed using AMBEX Cementitious Anchoring Capsule for tie bars and dowels. This is a dry pre-mixed cement grout that is contained in a water permeable wrapping. Once the grout capsule is saturated in water it becomes a fast setting grout. The system was reported as being used in Minnesota, New York and Idaho. It was suggested that we contact Mark Gaines, The Bridge Construction Engineer to see if the structural side of the house had any experience with the system. Mark's comments were " I am not familiar with Ambex AAC and don't believe we have ever used a product like this for bridge or structure applications. Based on the data sheet, it seems like a good product with documented pull-out capacities. While you aren't looking for pull-out capacity, a high pull-out capacity provides some indication that the hole has been completely filled with a high-quality material. A couple things that could be concerns. I would imagine that dowel bars see considerable cyclic loading as heavy vehicles pass over the joints. I'd have some concern that this product would not hold up as well as an epoxy to repeated cyclic loading over a number of years. Cementitious products are likely more brittle and less pliable than epoxy-based product. The other thing you may want to look at is whether this product is suitable for horizontal anchoring like you would have with dowel bars. The data sheet doesn't identify if this is appropriate for only downward vertical anchors or if it works for horizontal anchors. Epoxy product data sheets are usually very specific with respect to what applications that are suitable for. I have not heard anything about 9-20 products bonding better to dry surfaces. However, I very quickly took a look at three of the products covered by QPL 9-20.2 (SikaQuick 2500, Tamms Express Repair and Quikrete FastSet DOT Mix). All three of these products require saturated surface dry conditions before placement. I assume the other products do as well, but I didn't check. From my experience, we would always rely on following the manufacturer's recommendations for proprietary products like these. Deviating from these recommendations could product a product that doesn't achieve the properties identified in the data sheets. If there is research on this, could you have NW-ACPA forward it on to us/me?" Action Item: Jeff Uhlmeyer to check with other states and then possibly look for a job to try them on.

10/20/2014 – No discussion at today's meeting. Robert Seghetti agreed to follow up at next meeting.

New Business

14-09 New detail for drilling dowel bars for dowel bar retrofit replacement

10/20/2014 - Bob shared the detail (attached) which is intended to add drilling as an acceptable alternative to sawing of the slots for dowel bar retrofits, and said that if anyone else has any changes we are willing to review. WSDOT also discussed our intent to clean up the Standard Plan for tie bars. The main change will be to slightly reduce the need for installing tie bars. This will be done by changing the current requirement for tie bars - whenever there are 3 or more contiguous panels in a given lane - to requiring tie bars when there are four or more continuous panels in a given lane. It was discovered during the meeting that the handout (attached) does not yet reflect this particular change.

14-10 Spec change – Payment for tie bars/drill holes in PCCP from previous contract

10/20/2014 – Dave Erickson explained that we added language to clarify that payment for tie bars between new lanes of concrete pavement is incidental to the other work in the contract.

14-11 Spec Change – increase slag in PCCP mix design from 25% to 30%

10/20/2014 - Dave Jones recommended increasing the allowable slag percentage in Section 5-05.2, to 30%.

ACTION ITEMS

ITEM #	WHAT	WHO	STATUS
11-01	Report back on national best practices for patching PCCP in the proximity of dowel bars	Jim Powell	
13-01	Propose spec change for time of placement of end dumps	Jim Powell	
13-02	Find out why 2014 spec book eliminated max temp to pave on asphalt treated base.	Dave Erickson	
13-03	Distribute draft PCCP smoothness spec based on IRI to industry for review.	Dave Erickson	
14-01	Research if there is a rational basis for lowering minimum air content of rapid-set mixes, given the strengths being so much higher than required.	Dave Jones	
14-02	Draft spec to allow stringless grade control	Bob Dyer	
14-03	Follow-up on alternate to epoxy for anchoring horizontally drilled-in dowel bars.	Robert Seghetti	
14-09	Issue revised dowel bar retrofit Standard Plan A-60.10 and A-60.20.	Dave Erickson	
14-11	Issue spec to increase allowable slag percentage to 30%	Dave Jones	

Next Meeting Date – Tentatively agreed on Thursday, April 6, 2015.

Meeting Minutes by Bob Dyer

THIS DRAWING PROVIDES ALTERNATE SLOT LENGTH AND WIDTH TO THOSE SHOWN ON STANDARD PLAN A-60.20-02 (SHEET 2 OF 2)

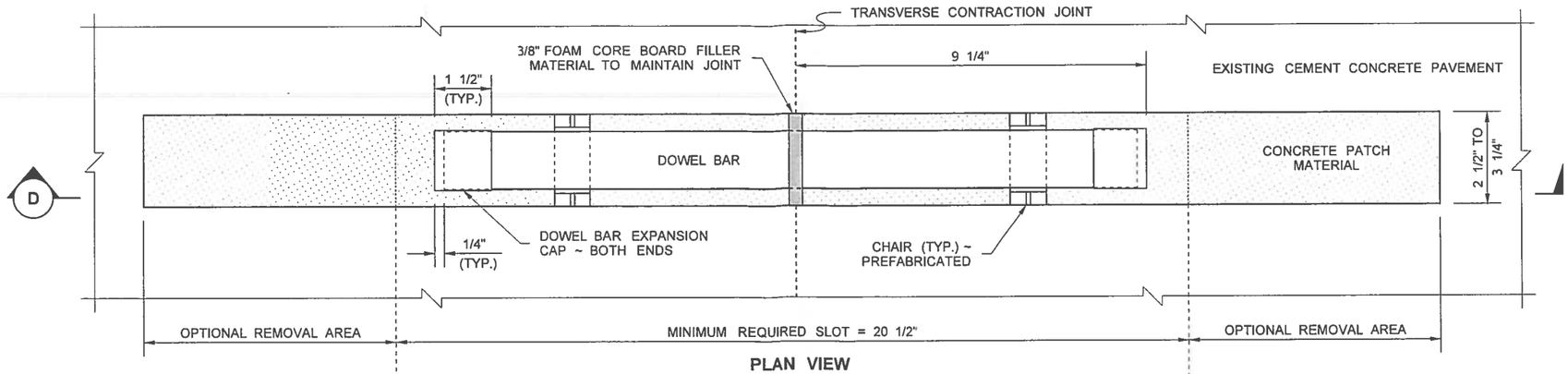

PLAN VIEW

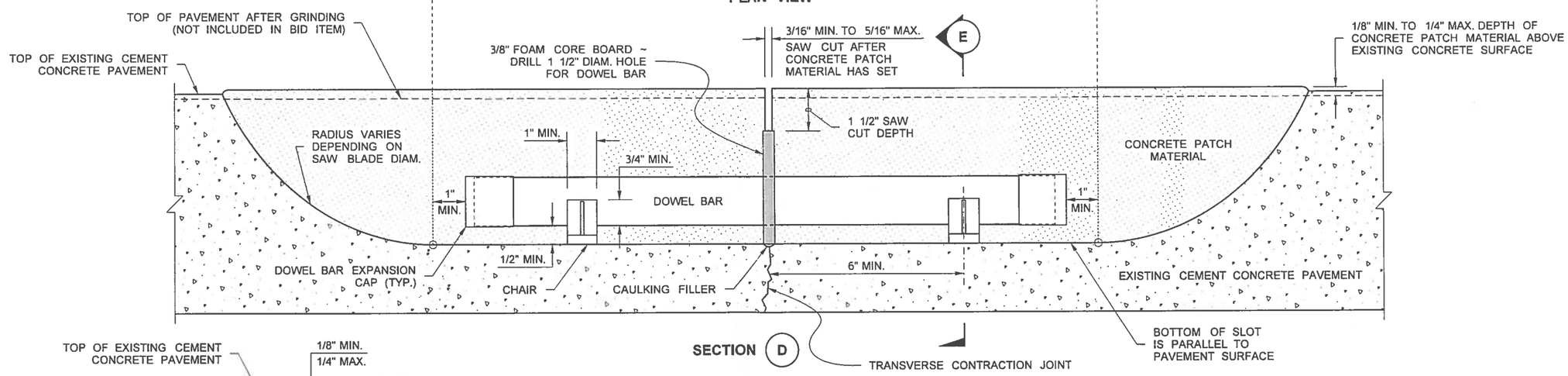

SECTION D

DOWEL BAR PLACEMENT DETAIL

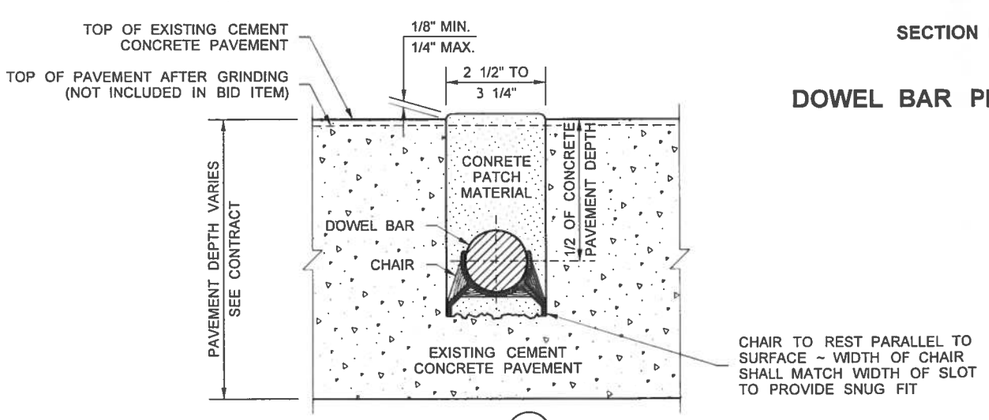

SECTION E

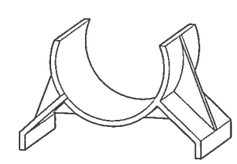

CHAIR DETAIL

WILL BE STANDARD PLAN A-60.20

FILE NAME	S:\Design R P& S\4-Standards\5- Projects for others\Bob Dyer\A-60.20-02 Alternative Addition.dgn				REGION NO.	STATE	FED.AID PROJ.NO.
TIME	2:46:59 PM					WASH	TIGER-2014(088)
DATE	8/19/2014				JOB NUMBER		
PLOTTED BY	FletcCo						
DESIGNED BY	B. DYER				CONTRACT NO.		LOCATION NO.
ENTERED BY	C. FLETCHER						
CHECKED BY	D. ERICKSON						
PROJ. ENGR.	X. XXX						
REGIONAL ADM.	X. XXX	REVISION	DATE	BY			

ROBERT MARTIN DYER — STATE OF WASHINGTON — 21065 — REGISTERED PROFESSIONAL ENGINEER

DATE — P.E. STAMP BOX

DATE — P.E. STAMP BOX

Washington State Department of Transportation

~~I-90 TWO-WAY TRANSIT & HOV OPERATIONS STAGE 3~~

~~ALTERNATE DOWEL BAR SLOT~~

Plot 1

PLAN REF NO X

SHEET X OF X SHEETS

DRAWN BY: FERN LIDDELL

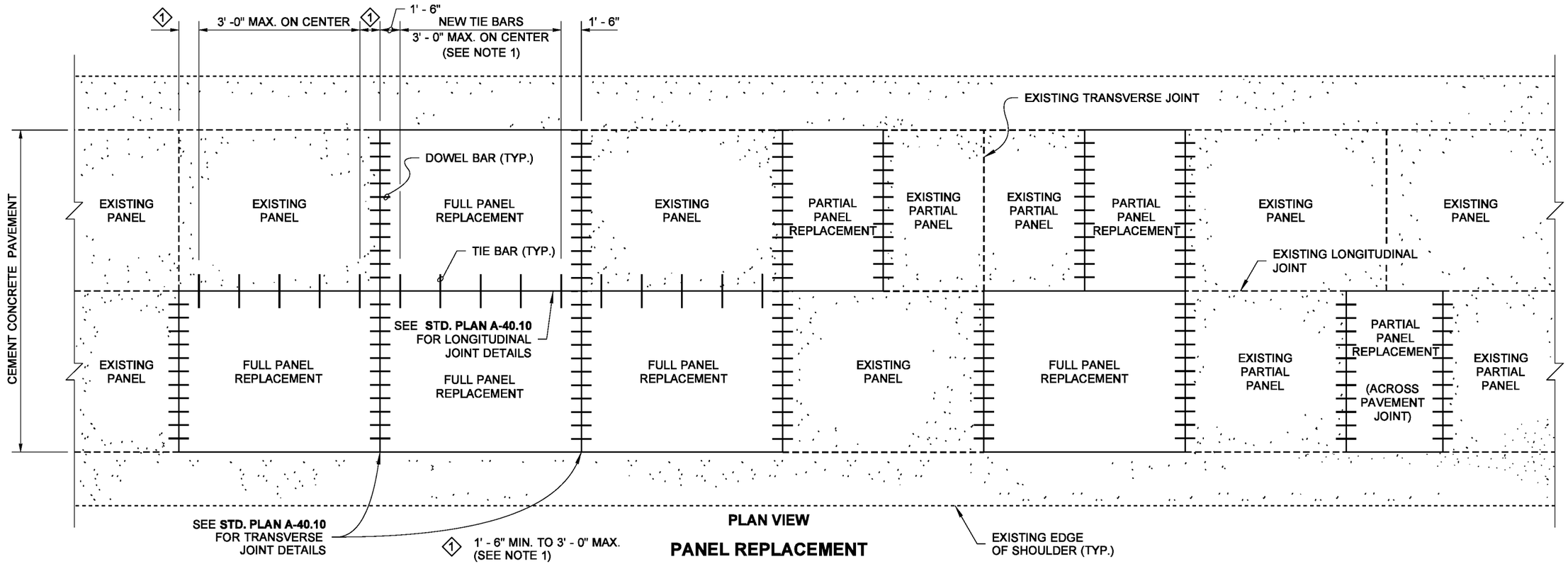

PLAN VIEW

PANEL REPLACEMENT

1 1' - 6" MIN. TO 3' - 0" MAX. (SEE NOTE 1)

2 1' - 0" MIN. (SEE NOTE 3)

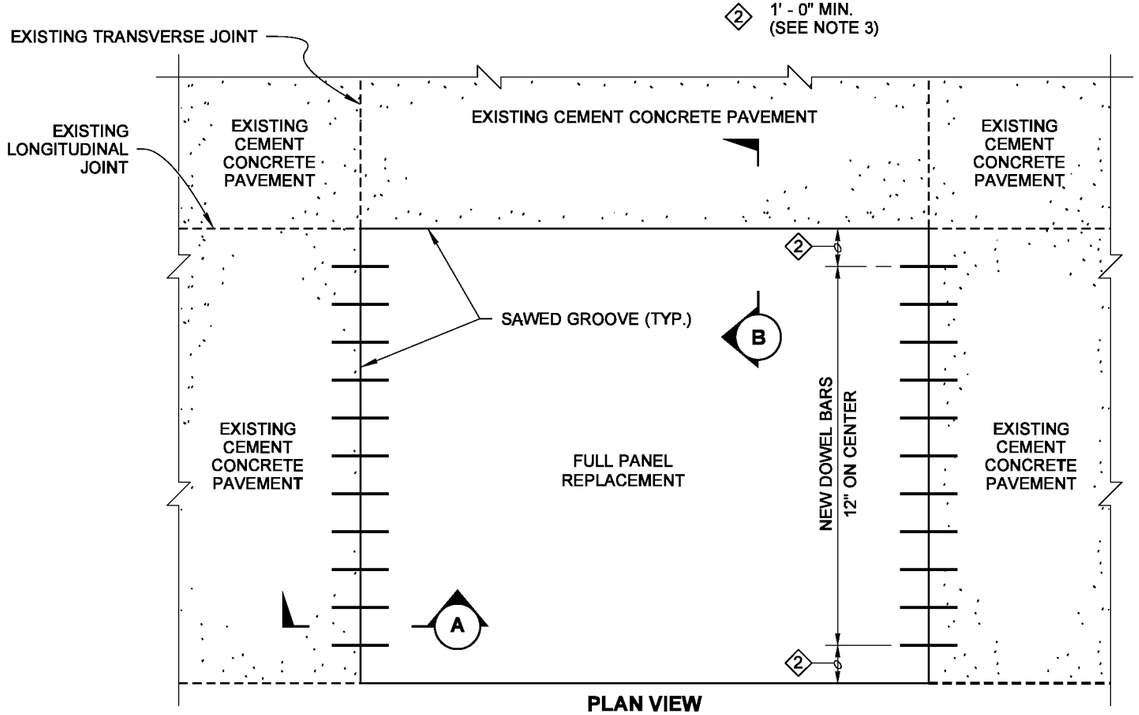

PLAN VIEW

FULL PANEL REPLACEMENT DETAIL

NOTES

1. Install tie bars across longitudinal joints between new panels (complete and partial) and existing cement concrete pavement lane or shoulder when three or more adjacent panels are replaced. Place new tie bars between existing tie bars.Tie bars are not installed between cement concrete pavement and hot mix asphalt shoulders.
2. Place a bond breaking material such as polyethylene film, roofing paper or other material approved by the Engineer along all existing concrete surfaces and between the bottom of the slab and bases prior to placing concrete.
3. Place new dowel bars between existing dowel bars.The 1' - 0" dimension from the edge of the panel may be increased by 6" (in) to avoid bar in existing panel.
4. Bars shall meet the requirements of **Standard Specification 9.07.5(1) or 9.07.5(2)**

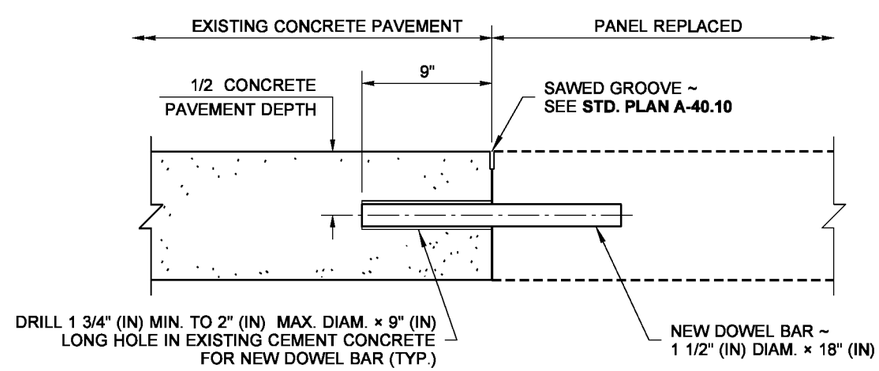

SECTION A

PRELIMINARY

CEMENT CONCRETE PAVEMENT REHABILITATION STANDARD PLAN A-60.10-02

SHEET 1 OF 2 SHEETS

APPROVED FOR PUBLICATION

STATE DESIGN ENGINEER

Washington State Department of Transportation

DRAWN BY: FERN LIDDELL

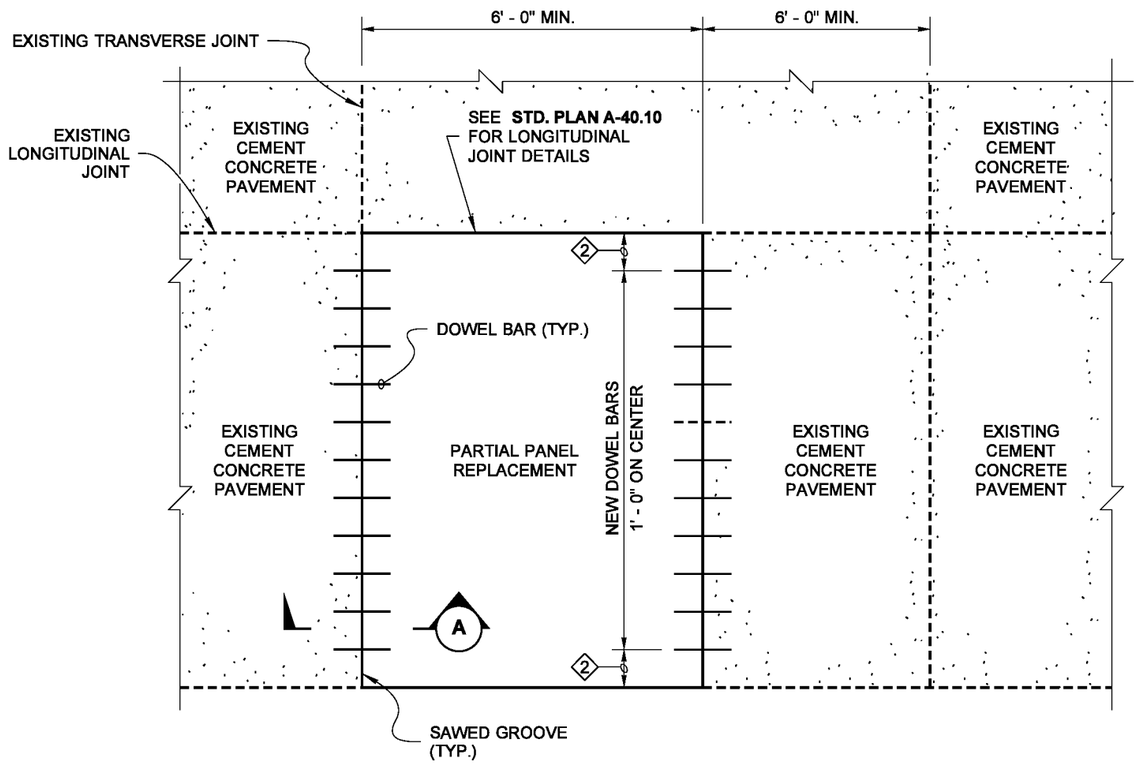

PLAN VIEW

PARTIAL PANEL REPLACEMENT
WITHOUT JOINT REPLACEMENT

2 1' - 0" MIN. (SEE NOTE 3)

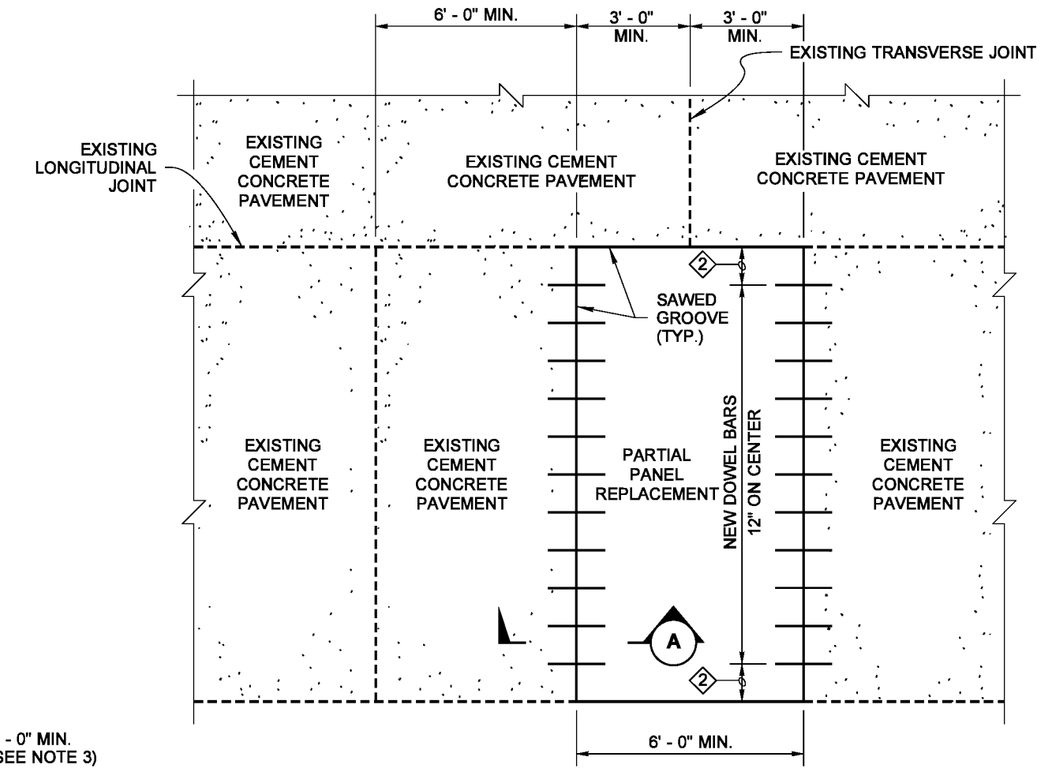

PLAN VIEW

PARTIAL PANEL REPLACEMENT
WITH JOINT REPLACEMENT

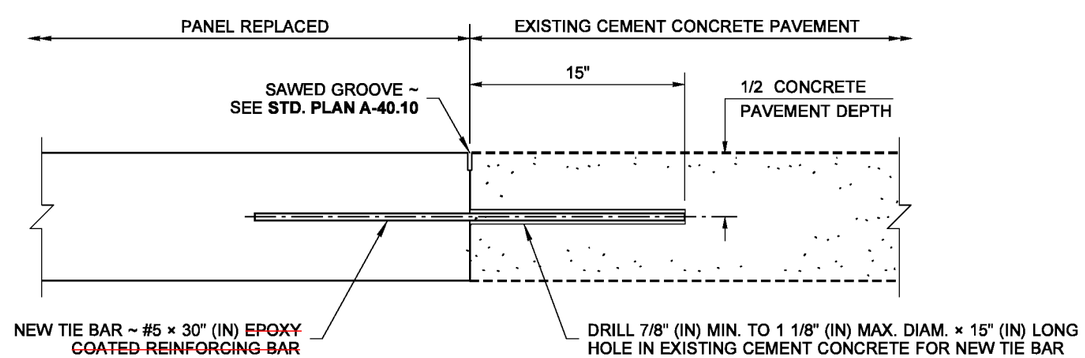

SECTION B

PRELIMINARY

CEMENT CONCRETE PAVEMENT REHABILITATION
STANDARD PLAN A-60.10-02

SHEET 2 OF 2 SHEETS

APPROVED FOR PUBLICATION

STATE DESIGN ENGINEER

Washington State Department of Transportation