GENERAL NOTES:

1. USE THIS RETROFIT DETAIL SHEET ONLY WHEN THE FOLLOWING CONDITIONS APPLY: EXISTING 3 ⅂ 2.33 Z-BAR SIGN LIGHTER BRACKETS ARE TO BE REUSED FOR A NEW SIGN LIGHTER FIXTURE. THE SPAN BETWEEN THE EXISTING SIGN LIGHTER BRACKETS IS TOO WIDE TO ATTACH THE NEW SIGN LIGHTER MOUNTING PLATE AND FIXTURE. EXISTING Z-BAR BRACKETS HAVE ALUMINUM PLATE CORNER REINFORCEMENTS.

2. ALL NUTS, BOLTS, WASHERS, AND OTHER HARDWARE SHALL BE STAINLESS STEEL.

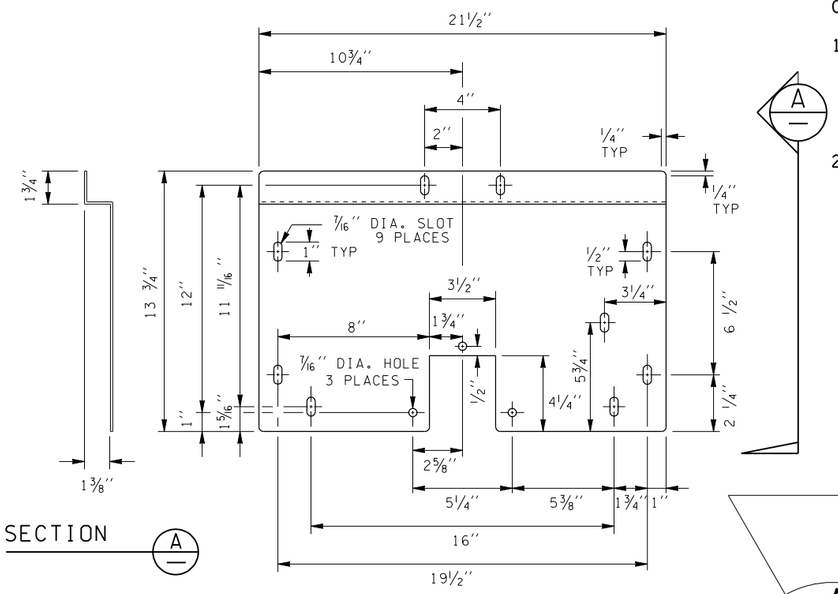

SECTION A

MOUNTING PLATE DETAIL

ITEM AVAILABLE FROM FIXTURE MANUFACTURER.
MATERIAL IS GALV. 10 GAGE STEEL PLATE.

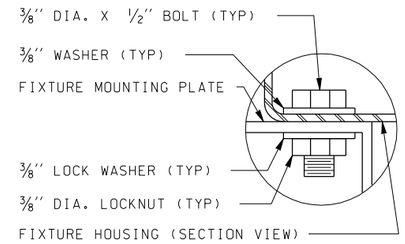

DETAIL A

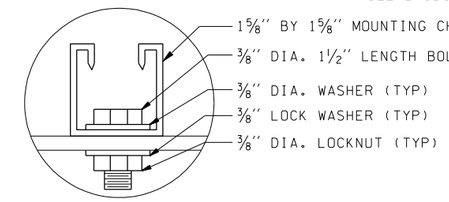

SECTION C

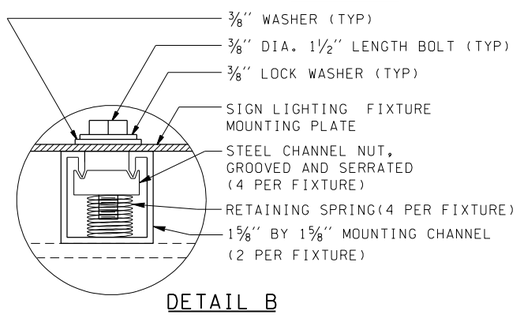

DETAIL B

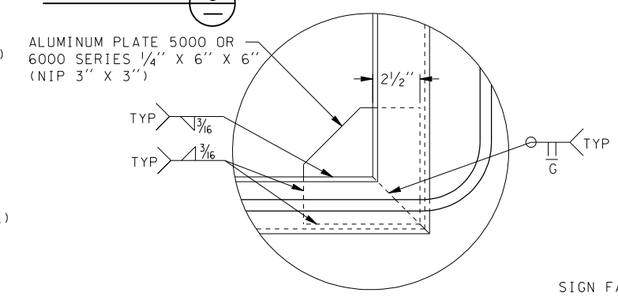

Z-BAR CORNER DETAIL

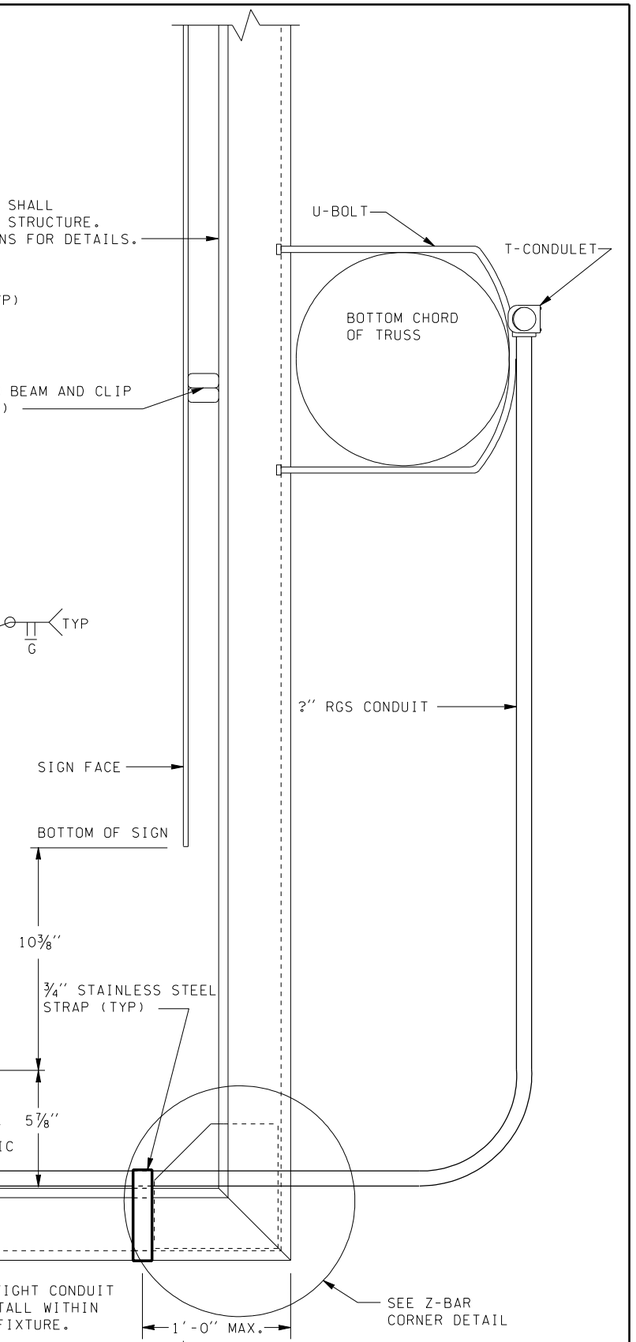

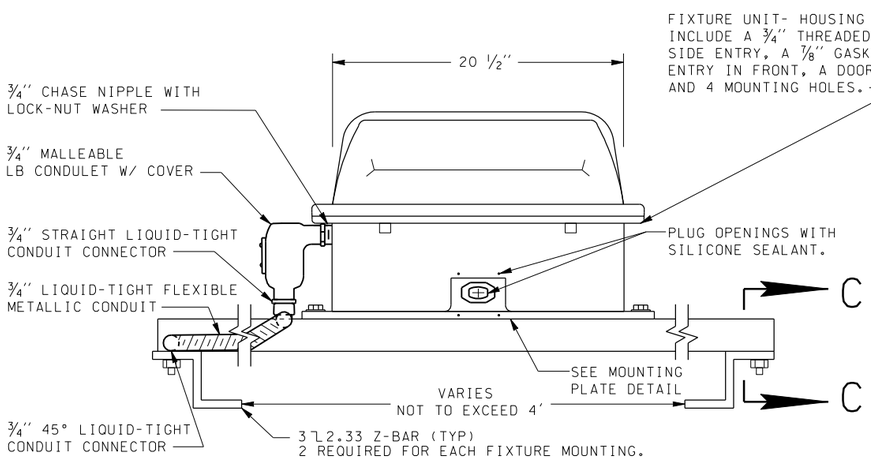

SECTION B

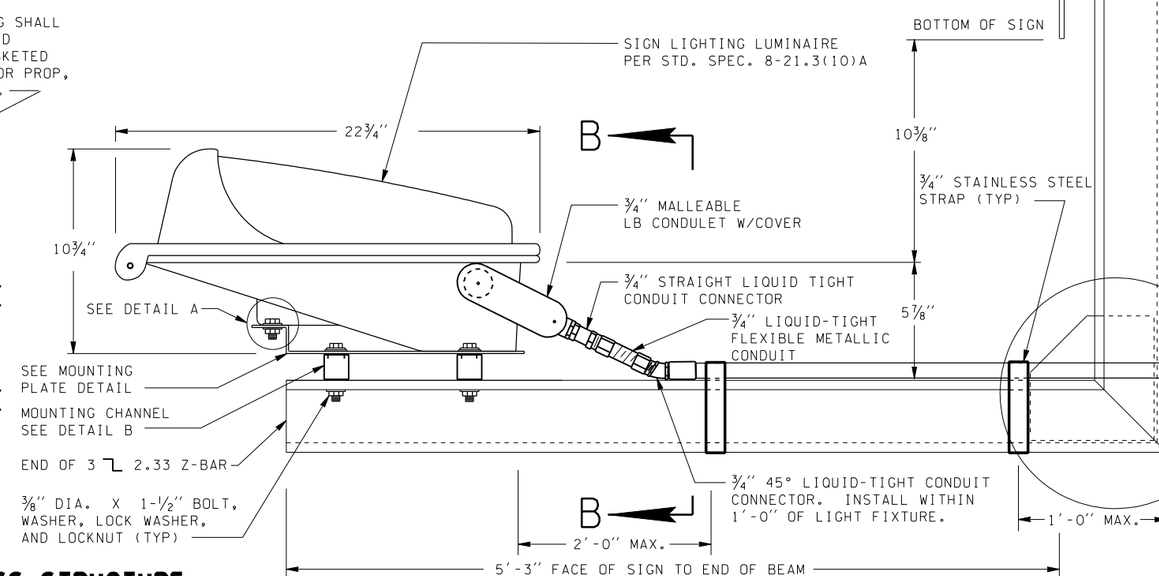

RETROFIT SIGN LIGHT MOUNTING DETAILS FOR TRUSS STRUCTURE

FILE NAME	S:\414126\Electrical\MASTER_FILES\DETAILS Homepage\signlighters_e.dgn				REGION NO.	STATE	FED.AID PROJ.NO.		PLOT21
TIME	03:02:04 PM				10	WASH			4.20E
DATE	04/07/2005				JOB NUMBER				SHEET OF SHEETS
DESIGNED BY									
ENTERED BY		¾" RGS CONDUIT NOTE	3-1-01	JH	CONTRACT NO.		LOCATION NO.		
CHECKED BY		MOVE WF BEAM TO NEW DETAIL	1-10-01	JH					
PROJ. ENGR.		CONDUIT ON TOP OF Z BAR	1-3-01	JH					
REGIONAL ADM.		REVISION	DATE	BY					

P.E. STAMP BOX — DATE

P.E. STAMP BOX — DATE

Washington State Department of Transportation

ENGLISH

RETROFIT SIGN LIGHT MOUNTING DETAILS FOR TRUSS STRUCTURE

WITH EXISTING Z-BAR