LTR.	REVISION	DATE	BY
A	REVISED PER CUSTOMER RED MARKS	2/15/05	JG
B	REVISED BOM	4/6/05	JG
C	REVISED BOM	1/22/07	TMB
D	NO CHANGES	2/5/07	TMB
E	REVISED BOM	3/2/07	TMB
F	ADDED HINGE ASSEMBLY DETAIL	4/17/07	TMB
G	NO CHANGES	6/4/07	TMB

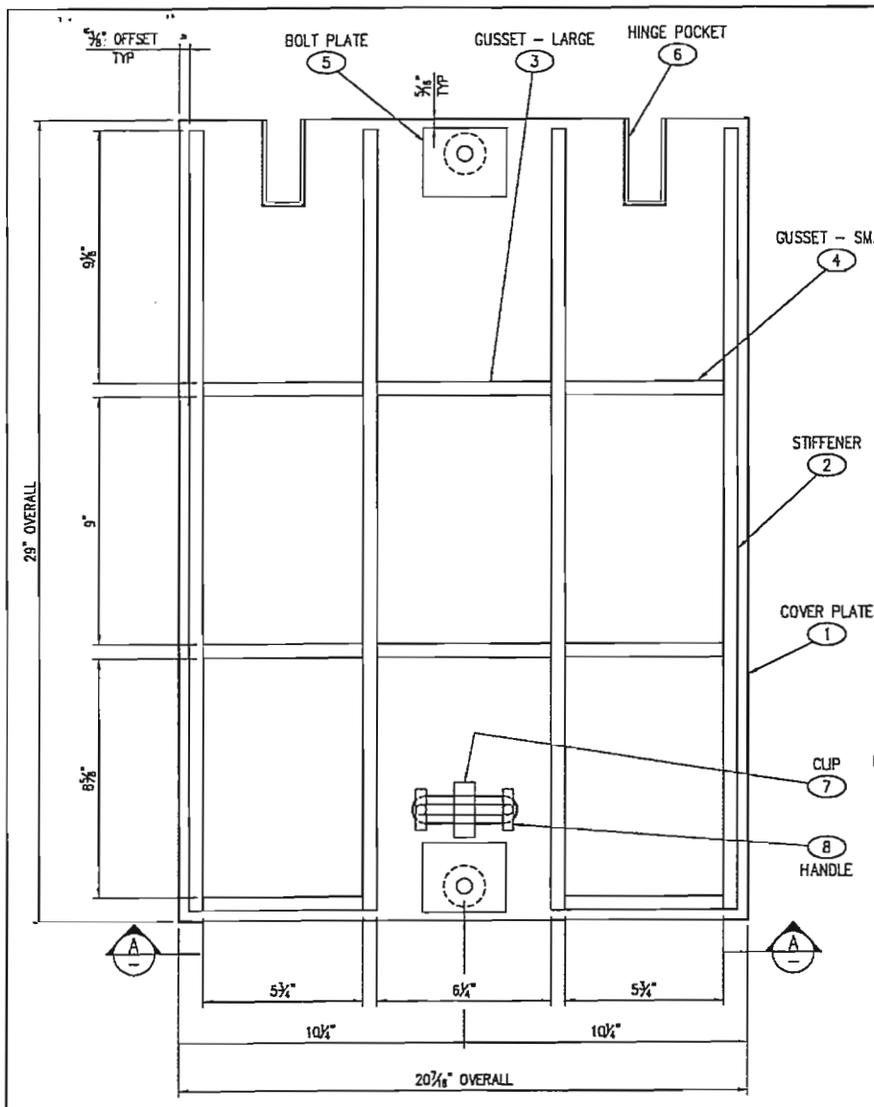

PLAN VIEW

TYPE 6 DOOR – LAYOUT
(UNDERSIDE OF DOOR)
COMPLETE SET = (2) DOORS

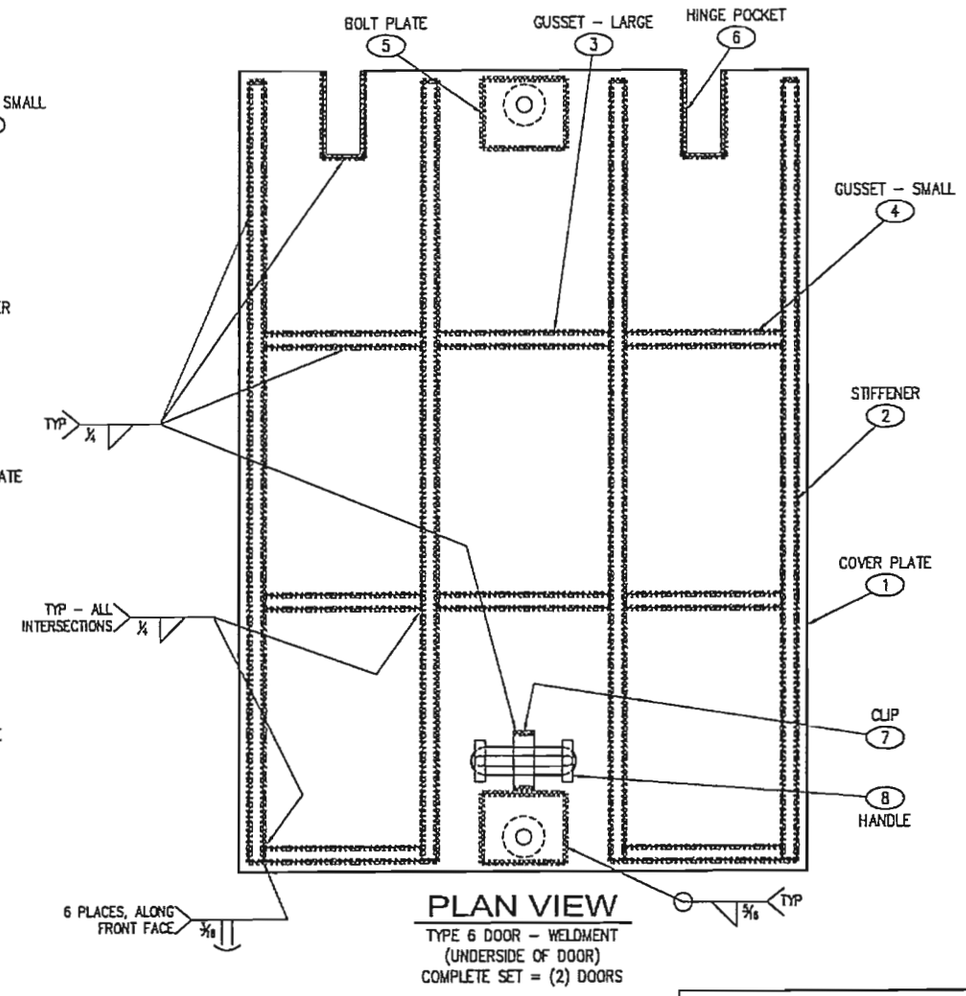

PLAN VIEW

TYPE 6 DOOR – WELDMENT
(UNDERSIDE OF DOOR)
COMPLETE SET = (2) DOORS

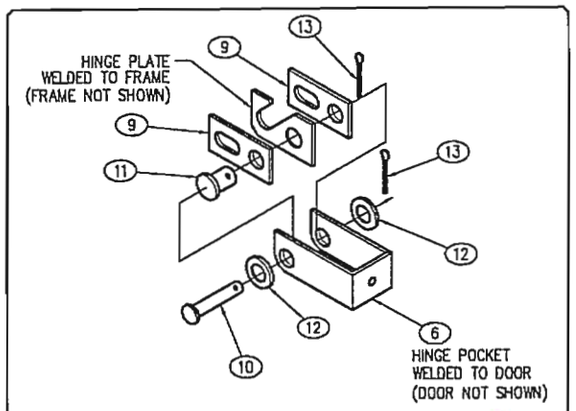

HINGE ASSEMBLY

(NOT INSTALLED UNTIL
DOOR & FRAME ASSEMBLED)

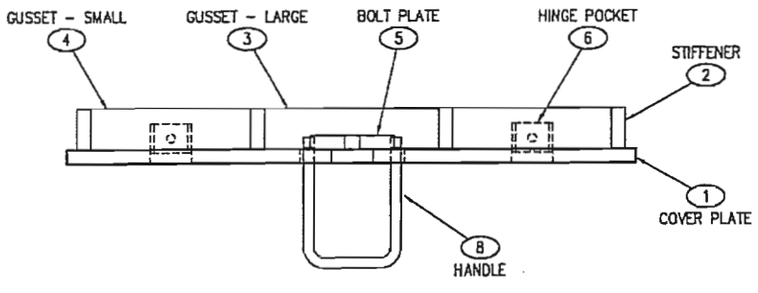

VIEW AA

SHOP NOTE:
GRIND ALL SHARP EDGES

TOLERANCE NOTE:
OVERALL DIMENSIONS HAVE A MAXIMUM ALLOWABLE TOLERANCE OF ± 1/16"

APPROVED
Washington State
Department of Transportation
HQ Traffic Operations Office
DATE August 8, 2007 TAT

PART LIST (2 DOORS/1SET) — B.O.M.

PART	PART NAME	DESCRIPTION	CUT SIZE	QTY.	UV No.	TOTAL
1	COVER PLATE	DIAMOND PLATE, 72" x 120" x 1/2"	(SEE SHT 2)	2	5540085	.16 sht
2	STIFFENER	FLATBAR, 1/2" x 1 5/8"	28 1/4"	8		.52 lbs
3	GUSSET – LARGE	FLATBAR, 1/2" x 1 5/8"	6 1/4"	4		5.76 lbs
4	GUSSET – SHORT	FLATBAR, 1/2" x 1 5/8"	5 3/4"	12		15.88 lbs
5	BOLT PLATE	—	(SEE SHT 3)	4	—	4 ea
6	HINGE POCKET	11 GA. FLATBAR	---	4	5310040	4 ea
7	CLIP	FLATBAR, 3/16" x 3/4"	2"	2	5520027	0.16 lbs
8	HANDLE	ROD, 1/2"	(SEE SHT3)	2	—	2 ea
9	SS HINGE SIDE PLATE	PLATE, 2-1/2" x 1-1/4"	---	8	—	8 ea
10	SS CLEVIS HINGE PIN	PIN, 3/8" x 2 1/4"	---	4	—	4 ea
11	SS CLEVIS HINGE PIN	PIN, 1/2" x 1"	---	4	—	4 ea
12	SS WASHER	WASHER, 9/16"	---	8	—	8 ea
13	SS COTTER PIN	COTTER PIN, 2"	---	8	—	8 ea
14	SS RETAINING BOLT	1/2" x 1-1/2"	---	4	—	4 ea

STRUCTURAL NOTES

1. MATERIAL: ASTM A36 STRUCTURAL STEEL STANDARDS
2. ASSEMBLY: AWS D1.1 WELDING STANDARDS
3. MATERIAL FOR LID, FRAME & GUSSET:

LID:	ASTM A786 DIAMOND PLATE ROLLED FROM PLATE COMPLYING WITH ASTM A572, GRADE 50 OR ASTM A588, BOTH WITH MIN. CVN TOUGHNESS OF 20 ft-lb AT 40° F
FRAME & STIFFENER PLATES:	ASTM A572, GRADE 50 OR ASTM A588, BOTH WITH MIN. CVN TOUGHNESS OF 20 ft-lb AT 40° F
HANDLE:	ASTM A36 STEEL
ANCHORS (STUDS):	SECTION 9-06.15
BOLTS, NUTS, WASHERS:	ASTM F593 OR A193, TYPE 304 OR 316

NOTES

1. COVER TO BE PAINTED AFTER FABRICATION
2. ALL WELDS TO BE 3/16" FILLET WELDS UNLESS OTHERWISE NOTED
3. ASSEMBLY PARTS PROVIDED BY WILSONVILLE (NOT SHOWN):
   - 9 SS HINGE SIDE PLATE
   - 10 SS HINGE PIN
   - 11 SS HINGE PIN
   - 12 SS WASHER
   - 13 SS COTTER PIN
   - 14 SS RETAINING BOLT

ITEM	QUANTITY
SALES INFORMATION	
CUSTOMER STANDARD PRODUCT	
SALES	S.O. #
DRAWN JG	LINE #
CHECKED	DATE 6/21/04

THIS DOCUMENT IS THE PROPERTY OF OLDCASTLE PRECAST, INC. IT IS SUBMITTED FOR REFERENCE PURPOSES ONLY AND SHALL NOT BE USED IN ANY WAY INJURIOUS TO THE INTERESTS OF SAID COMPANY. COPYRIGHT © 2004 Oldcastle Precast, Inc. All Rights Reserved

PART	DESCRIPTION	QUAN.	SIZE	TOTAL WT. LBS.

BILL OF MATERIAL

J11 TYPE 6 COVER – LAYOUT & WELDMENT

WSDOT

SCALE 3"=1'-0"	APPROVED	DWG NO. CC-0406	REV. G
SHEET 1 OF 5	WEIGHT		

UTILITY VAULT™ PO Box 585 Auburn, WA 98071-0585 Ph: 800-892-1538 Fax: 253-735-4101

a division of Oldcastle Precast, Inc.

Auburn, WA / Wilsonville, OR / Chandler, AZ / Pleasanton / Livermore / Fontana / San Diego / Stockton, CA

"uvcub-C_TiUeBlock.dwg" Revised: 01/01/04

LTR.	REVISION	DATE	BY
A	ADD SHOP NOTE	2/15/05	JG
C	NO CHANGES	1/22/07	TMB
D	NO CHANGES	2/5/07	TMB
E	NO CHANGES	3/2/07	TMB
F	NO CHANGES	4/17/07	TMB
G	NO CHANGES	6/4/07	TMB

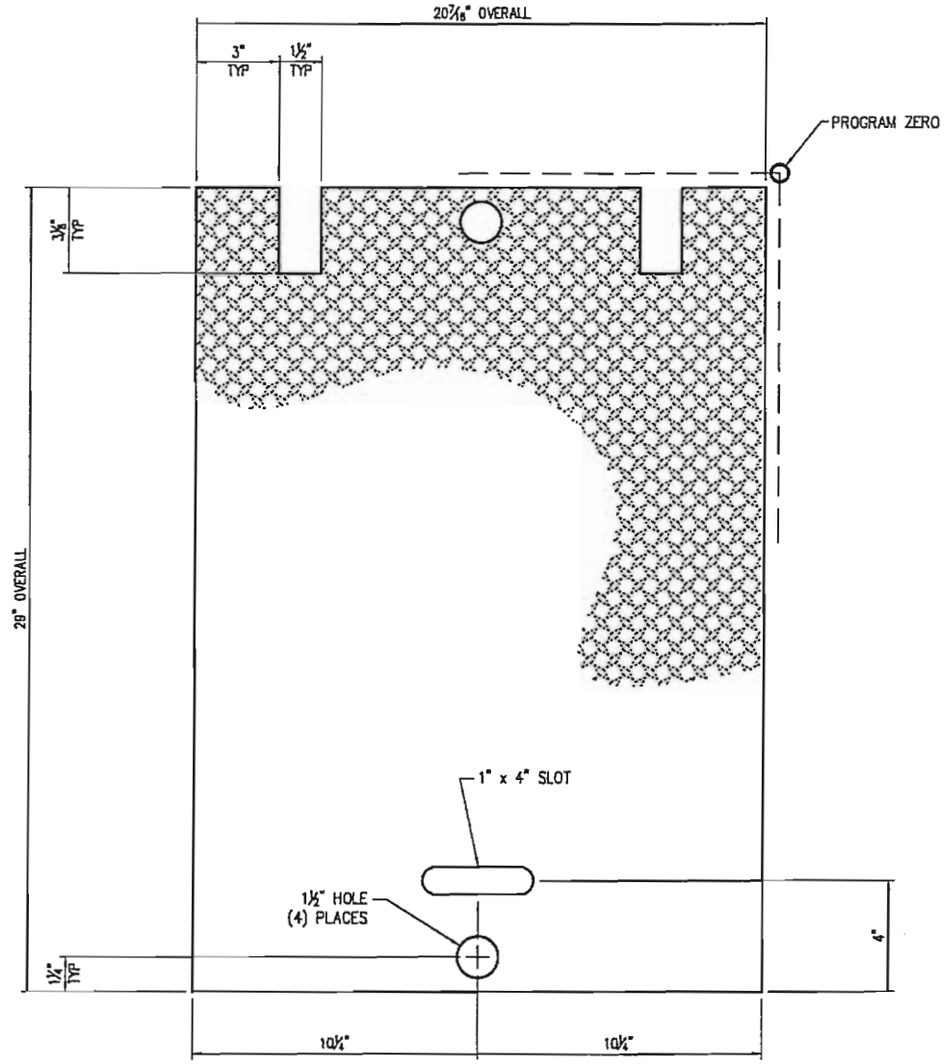

PLAN VIEW

TYPE 6 DOOR – CUT LAYOUT

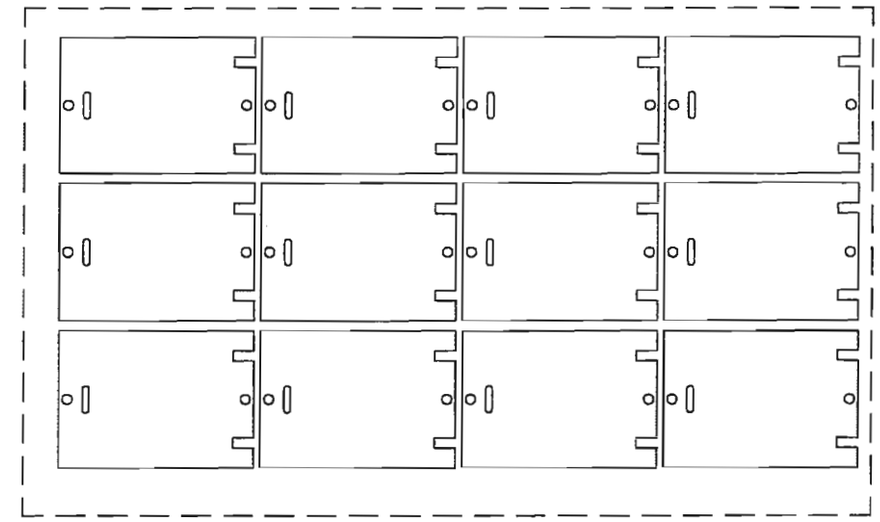

DETAIL

MATERIAL: ½" DIAMOND PLATE
72" x 120" SHEET

SHOP NOTE:

CUT WITH DIAMOND PLATE FACE DOWN.

ADJUST KERF OFFSET WHEN CUTTING TO APPROX. .08 TO MAINTAIN OVERALL DIMENSIONS. CUT 1 TEST DOOR TO ENSURE OFFSET IS CORRECT.

NOTES:

1. MATERIAL: ½" DIAMOND PLATE (SEE STRUCTURAL NOTE 3, SHEET 1 OF 5)
2. LAYER CUTA IS FOR SINGLE CUT PROGRAM (CC-0406A)
3. LAYER CUTB IS FOR MULTIPLE CUT PROGRAM (CC-0406B) – SEE DETAIL

APPROVED
Washington State
Department of Transportation
HQ Traffic Operations Office
DATE August 8, 2007 TAT

PART	DESCRIPTION	QUAN.	SIZE	TOTAL WT. LBS.
BILL OF MATERIAL				
J11 TYPE 6 COVER – CUT LAYOUT				
WSDOT				

ITEM	QUANTITY
SALES INFORMATION	
CUSTOMER STANDARD PRODUCT	
SALES	S.O. #
DRAWN JG	LINE #
CHECKED	DATE 6/21/04

SCALE 3"=1'-0"	APPROVED	DWG NO. CC-0406	REV. G
SHEET 2 OF 5	WEIGHT		

THIS DOCUMENT IS THE PROPERTY OF OLDCASTLE PRECAST, INC. IT IS SUBMITTED FOR REFERENCE PURPOSES ONLY AND SHALL NOT BE USED IN ANY WAY INJURIOUS TO THE INTERESTS OF SAID COMPANY. COPYRIGHT © 2004 Oldcastle Precast, Inc. All Rights Reserved

UTILITY VAULT™
PO Box 588 Auburn, WA 98071-0588
Ph: 800-852-1538 Fax: 253-735-4201
a division of Oldcastle Precast, Inc.
Auburn, WA / Maywood, OR / Chandler, AZ / Pleasanton / Livermore / Fontana / San Diego / Stockton, CA

"uvsub-C_TitleBlock.dwg" Revised: 01/01/04

LTR.	REVISION	DATE	BY
A	MODIFIED BOLT PLATE FOR EASE OF WELDING	2/15/05	JG
B	REVISED BOM	4/6/05	JG
C	NO CHANGES	1/22/07	TMB
D	NO CHANGES	2/5/07	TMB
E	CHANGED HANDLE TO 1/2" ROD	3/2/07	TMB
F	NO CHANGES	4/17/07	TMB
G	NO CHANGES	6/4/07	TMB

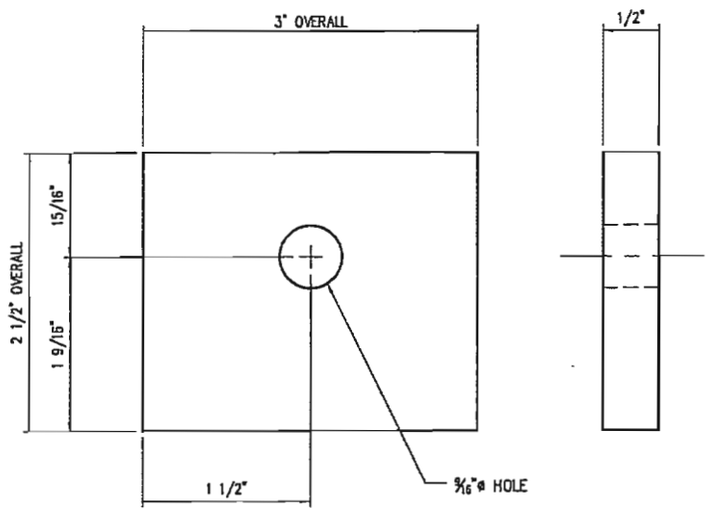

PLAN VIEW
BOLT PLATE

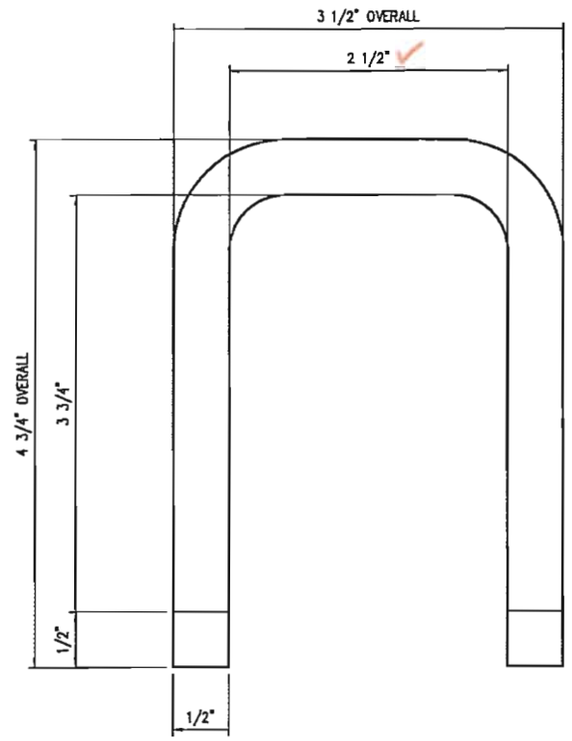

PLAN VIEW
HANDLE

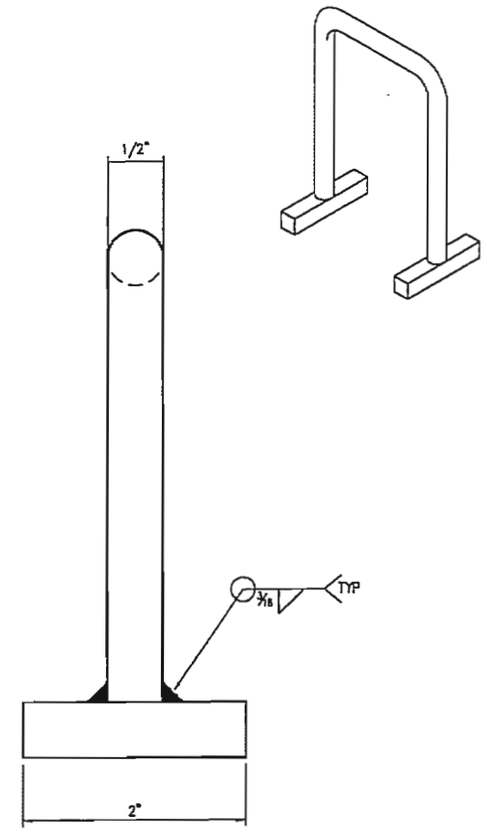

PART LIST					B.O.M.	
PART	PART NAME	DESCRIPTION	CUT SIZE	QTY.	UV No.	TOTAL
1	BOLT PLATE	FLATBAR, 1/2" x 2 1/2"	3"	4		4.25 lbs
2	HANDLE	ROD, 1/2"	11"	2	5520222	0.94 lbs
3	HANDLE RETAINER	SQUARE BAR 3/8"	2"	4	5520220	0.31 lbs

APPROVED
Washington State
Department of Transportation
HQ Traffic Operations Office
DATE August 8, 2007 TAT

ITEM	QUANTITY
SALES INFORMATION	
CUSTOMER STANDARD PRODUCT	
SALES	S.O. #
DRAWN JG	LINE #
CHECKED	DATE 6/21/04

THIS DOCUMENT IS THE PROPERTY OF OLDCASTLE PRECAST, INC. IT IS SUBMITTED FOR REFERENCE PURPOSES ONLY AND SHALL NOT BE USED IN ANY WAY INJURIOUS TO THE INTERESTS OF SAID COMPANY. COPYRIGHT © 2004 Oldcastle Precast, Inc. All Rights Reserved

PART	DESCRIPTION	QUAN.	SIZE	TOTAL WT. LBS.

BILL OF MATERIAL

TYPE 6 COVER – PART LAYOUT

STANDARD PRODCUT

SCALE FULL	APPROVED	DWG NO.	REV.
SHEET 3 OF 5	WEIGHT	CC–0406	G

UTILITY VAULT™
PO Box 5555 Auburn, WA 98071-0555
Ph: 800-882-1538 Fax: 253-735-4201
a division of Oldcastle Precast, Inc.
Auburn, WA / Wilsonville, OR / Chandler, AZ / Pleasanton / Livermore / Fontana / San Diego / Stockton, CA

"uvaub-C_TitleBlock.dwg" Revised: 01/01/04

LTR.	REVISION	DATE	BY
A	REVISED PER CUSTOMER RED MARKS	2/15/05	JG
B	REVISED BOM	4/6/05	JG
C	NO CHANGES	1/22/2007	TMB
D	CHANGED GROUNDING NUT TO A 3/8" COUPLER NUT	2/5/07	TMB
E	NO CHANGES	3/2/07	TMB
F	NO CHANGES	4/17/07	TMB
G	ADDED NAME PLATE	6/4/07	TMB

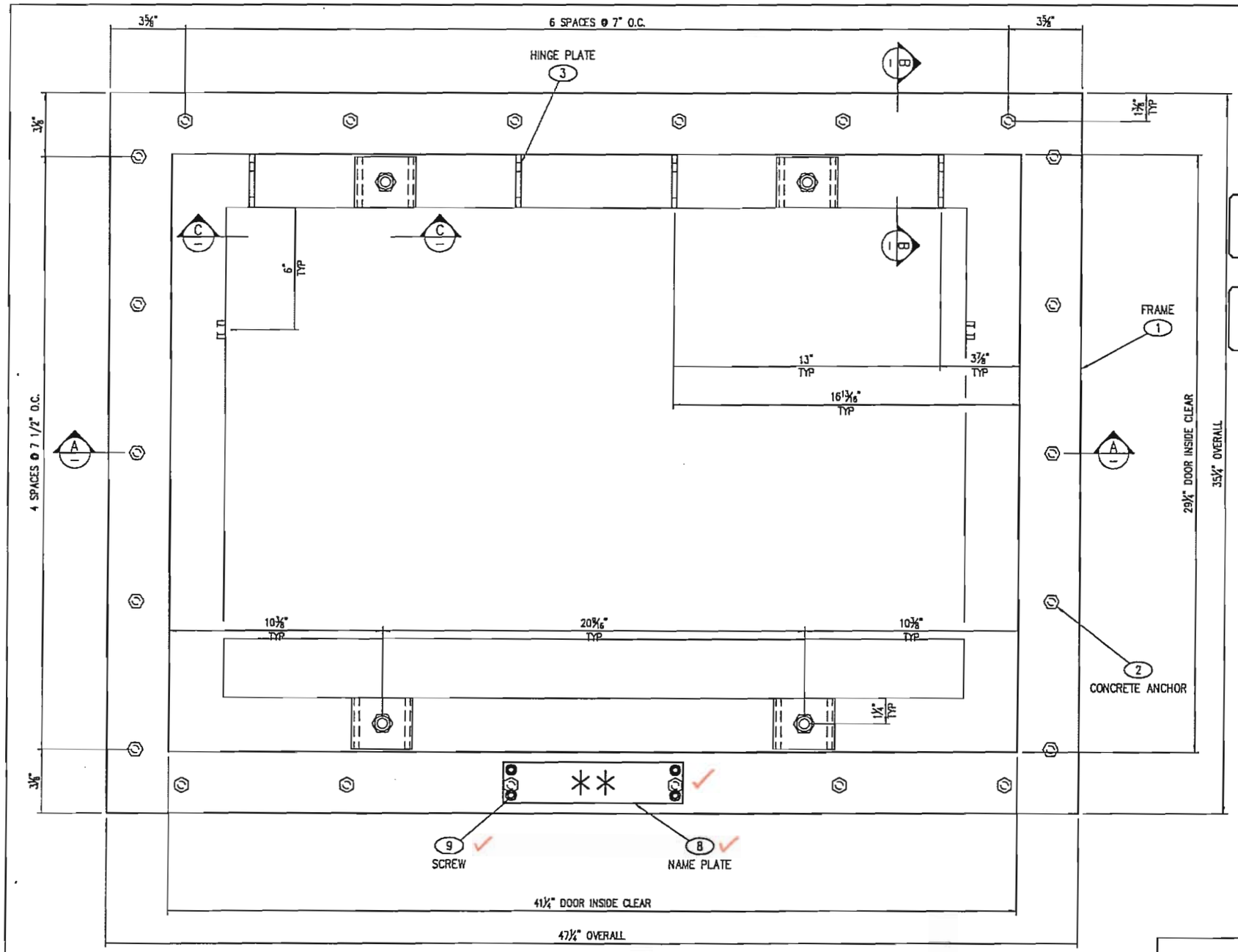

PLAN VIEW

TYPE 6 FRAME – LAYOUT & WELDMENT

APPROVED AS NOTED
Washington State
Department of Transportation
HQ Traffic Operations Office
DATE August 8, 2007 TAT

SHOP NOTE:
GRIND ALL SHARP EDGES

TOLERANCE NOTE:
OVERALL DIMENSIONS HAVE A MAXIMUM ALLOWABLE TOLERANCE OF ± 1/16"

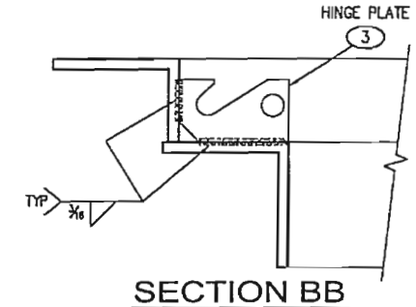

SECTION BB

N.T.S.

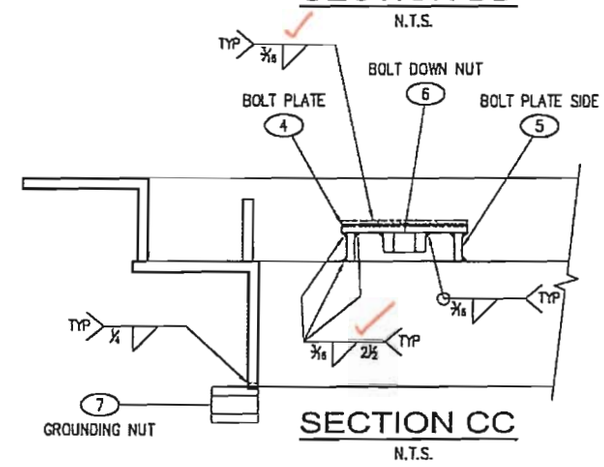

SECTION CC

N.T.S.

STRUCTURAL NOTES

1. MATERIAL: ASTM A36 STRUCTURAL STEEL STANDARDS
2. ASSEMBLY: AWS D1.1 WELDING STANDARDS
3. SEE STRUCTURAL NOTE 3, SHEET 1 OF 5

NOTES

1. FRAME TO BE PAINTED AFTER FABRICATION
2. ALL WELDS TO BE 3/16" FILLET WELDS UNLESS OTHERWISE NOTED
3. BOND LID TO FRAME – SEE NOTE 11, ON WSDOT DETAIL SHEET
4. PARTS PROVIDED BY WILSONVILLE:
   9 SCREW

PART LIST					B.O.M.	
PART	PART NAME	DESCRIPTION	CUT SIZE	QTY.	UV No.	TOTAL
1	FRAME	(SEE SHEET 2 FOR ASSEMBLY)	—	1	—	1
2	CONCRETE ANCHOR (stud)	BOLT 1/2" X 8" GALV. Per 9-06.15	—	22	5910445	22 ea
3	HINGE PLATE	FLATBAR, 2 3/4" x 1 1/2"	—	4	5210600	4 ea
4	BOLT PLATE	FLATBAR, 1/4" x 3"	2 1/2"	4	5520189	2.12 lbs
5	BOLT PLATE SIDE	FLATBAR, 1/4" x 3"	11/16"	8	5520189	1.17 lbs
6	BOLT DOWN NUT	HEX NUT, 1/2"ø SS	—	4	—	4 ea
7	GROUNDING NUT	COUPLER NUT, 3/8" x 1-1/8", SS	—	2	—	2 ea
8	NAME PLATE	FLATBAR 1/8" x 2", SS	(SEE SHT 5)	1		
9	SCREW	1/4"-20 x 3/4" ALLEN FLATHEAD, SS	—	4		

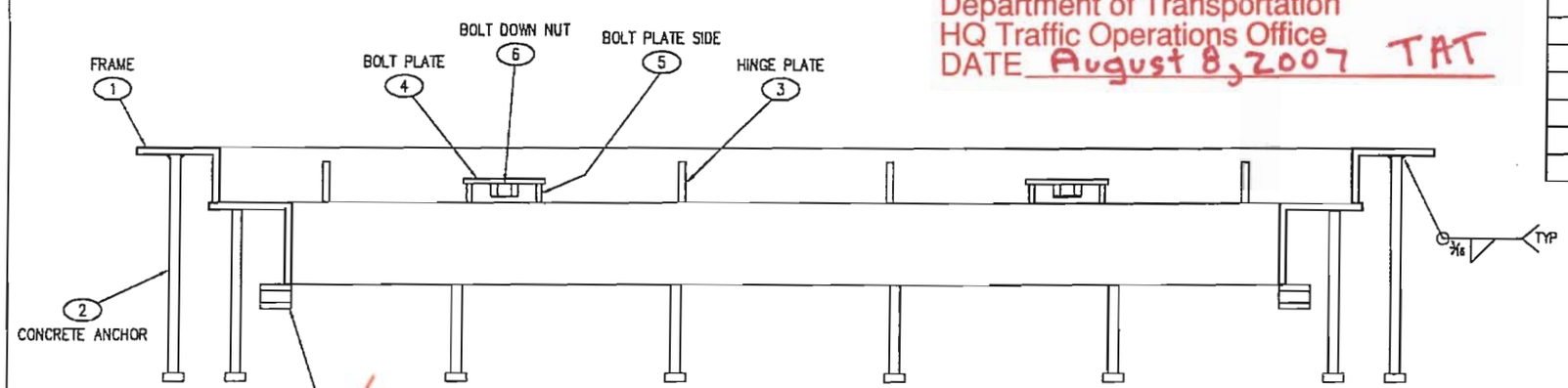

SECTION AA

ITEM	QUANTITY
SALES INFORMATION	
CUSTOMER STANDARD PRODUCT	
SALES	S.O. #
DRAWN JG	LINE #
CHECKED	DATE 6/23/04

THIS DOCUMENT IS THE PROPERTY OF OLDCASTLE PRECAST, INC. IT IS SUBMITTED FOR REFERENCE PURPOSES ONLY AND SHALL NOT BE USED IN ANY WAY INJURIOUS TO THE INTERESTS OF SAID COMPANY. COPYRIGHT © 2004 Oldcastle Precast, Inc. All Rights Reserved

PART	DESCRIPTION	QUAN.	SIZE	TOTAL WT. LBS.

BILL OF MATERIAL

J11 TYPE 6 FRAME – LAYOUT & WELDMENT

WSDOT

SCALE 3"=1'-0"	APPROVED	DWG NO.	REV.
SHEET 4 OF 5	WEIGHT	CC-0406	G

UTILITY VAULT™
PO Box 588 Auburn, WA 98071-0588
Ph: 800-882-1538 Fax: 253-735-4201
a division of Oldcastle Precast, Inc.
Auburn, WA / Wilsonville, OR / Chandler, AZ / Pleasanton / Livermore / Fontana / San Diego / Stockton, CA

"uvaub-C_TilleBlock.dwg" Revised: 01/01/04

LTR.	REVISION	DATE	BY
A	REVISED PER CUSTOMER RED MARKS	2/15/05	JG
B	REVISED BOM	4/6/05	JG
C	NO CHANGES	1/22/07	TMB
D	NO CHANGES	2/5/07	TMB
E	NO CHANGES	3/2/07	TMB
F	NO CHANGES	4/17/07	TMB
G	ADDED NAME PLATE	6/4/07	TMB

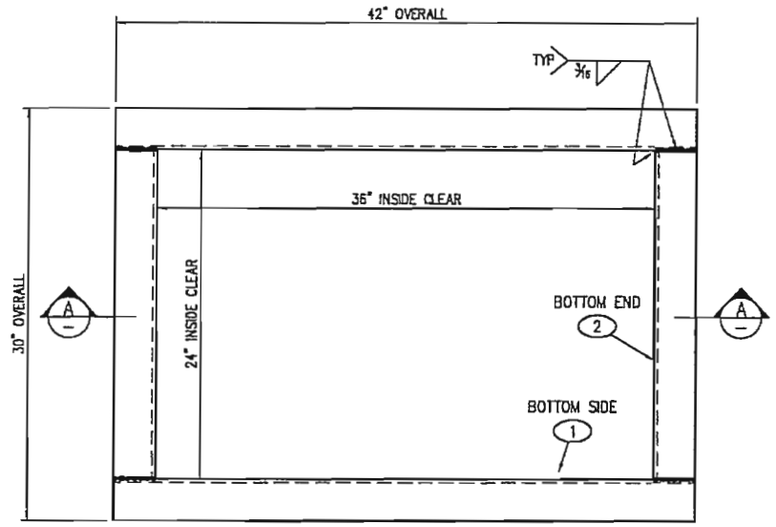

PLAN VIEW
TYPE 6 FRAME – BOTTOM

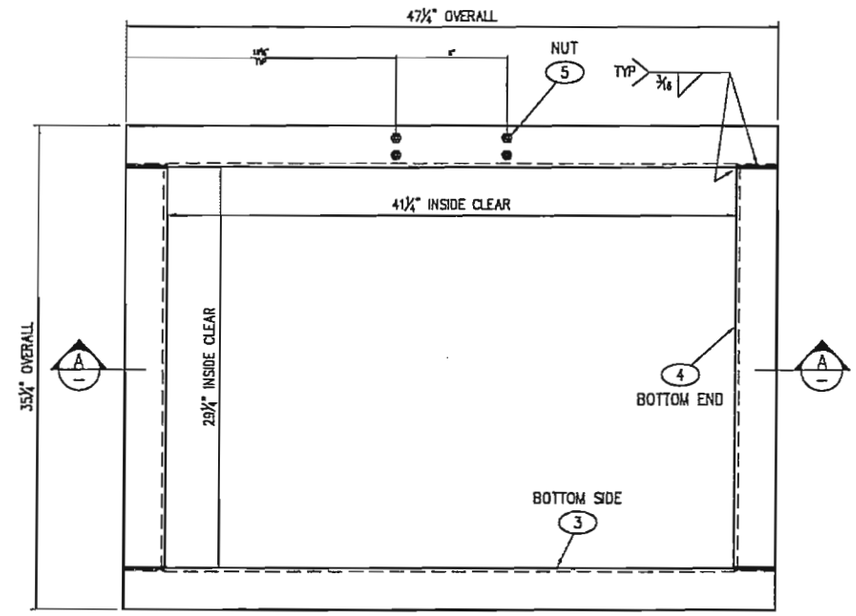

PLAN VIEW
TYPE 6 FRAME – TOP

APPROVED
Washington State
Department of Transportation
HQ Traffic Operations Office
DATE August 8, 2007 TAT

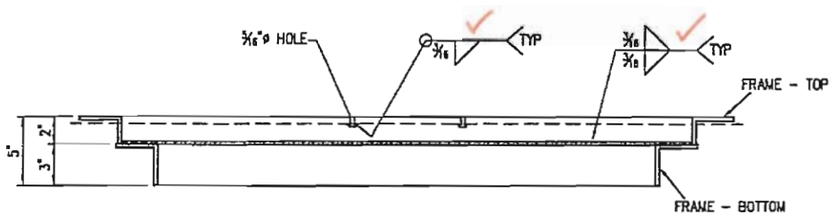

SECTION AA

PART LIST					B.O.M.	
PART	PART NAME	DESCRIPTION	CUT SIZE	QTY.	UV No.	TOTAL
1	FRAME – SIDE BOTTOM	ANGLE, 3" x 3" x 1/4"	42"	2		34.30 lbs
2	FRAME – END BOTTOM	ANGLE, 3" x 3" x 1/4"	24"	2		19.60 lbs
3	FRAME – SIDE TOP	ANGLE, 2" x 3" x 1/4"	47 1/4"	2		32.28 lbs
4	FRAME – END TOP	ANGLE, 2" x 3" x 1/4"	29 1/4"	2		19.98 lbs
5	NUT	1/4"–20 HEX NUT, SS	—	4		
* 8	NAME PLATE	FLATBAR 1/8" x 2", SS	8 3/4"	1	*	

* SPECIAL ORDER: FLATBAR 1/8" x 2", STAINLESS

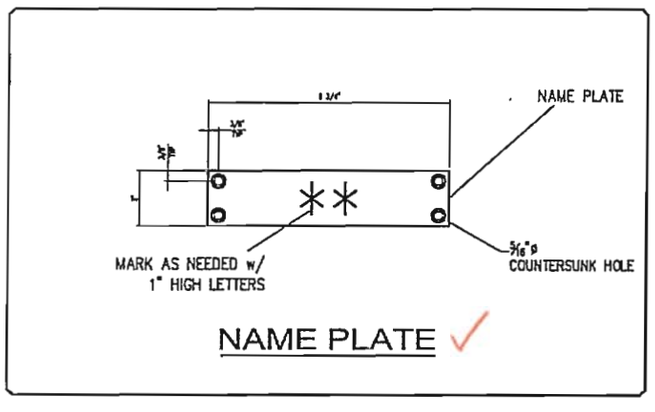

NAME PLATE

SHOP NOTE:
GRIND ALL SHARP EDGES

TOLERANCE NOTE:
OVERALL DIMENSIONS HAVE A MAXIMUM ALLOWABLE TOLERANCE OF ± 1/16"

STRUCTURAL NOTES
1. MATERIAL: ASTM A36 STRUCTURAL STEEL STANDARDS
2. ASSEMBLY: AWS D1.1 WELDING STANDARDS
3. SEE STRUCTURAL NOTE 3, SHEET 1 OF 5

ITEM	QUANTITY
SALES INFORMATION	
CUSTOMER STANDARD PRODUCT	
SALES	S.O. #
DRAWN JG	LINE #
CHECKED	DATE 6/23/04

THIS DOCUMENT IS THE PROPERTY OF OLDCASTLE PRECAST, INC. IT IS SUBMITTED FOR REFERENCE PURPOSES ONLY AND SHALL NOT BE USED IN ANY WAY INJURIOUS TO THE INTERESTS OF SAID COMPANY. COPYRIGHT © 2004 Oldcastle Precast, Inc. All Rights Reserved

PART	DESCRIPTION	QUAN.	SIZE	TOTAL WT. LBS.

BILL OF MATERIAL

J11 TYPE 6 FRAME – FRAME LAYOUT

WSDOT

SCALE 1 1/2"=1'-0"	APPROVED	DWG NO.	REV.
SHEET 5 OF 5	WEIGHT	CC–0406	G

UTILITY VAULT™
PO Box 588 Auburn, WA 98071-0588
Ph: 800-892-1538 Fax: 253-735-4201
a division of Oldcastle Precast, Inc.
Auburn, WA / Wilsonville, OR / Chandler, AZ / Phoenixville / Livermore / Fontana / San Diego / Stockton, CA

"uvaub-C_TitleBlock.dwg" Revised: 01/01/04