GENERAL NOTES:

1. USE THIS RETROFIT DETAIL SHEET ONLY WHEN THE FOLLOWING CONDITIONS APPLY: EXISTING WF BEAM SIGN LIGHTER BRACKETS ARE TO BE REUSED FOR A NEW SIGN LIGHTER FIXTURE. THE SPAN BETWEEN THE EXISTING SIGN LIGHTER BRACKETS IS TOO WIDE TO ATTACH THE NEW SIGN LIGHTER MOUNTING PLATE AND FIXTURE.

2. ALL NUTS, BOLTS, WASHERS, AND OTHER HARDWARE SHALL BE STAINLESS STEEL.

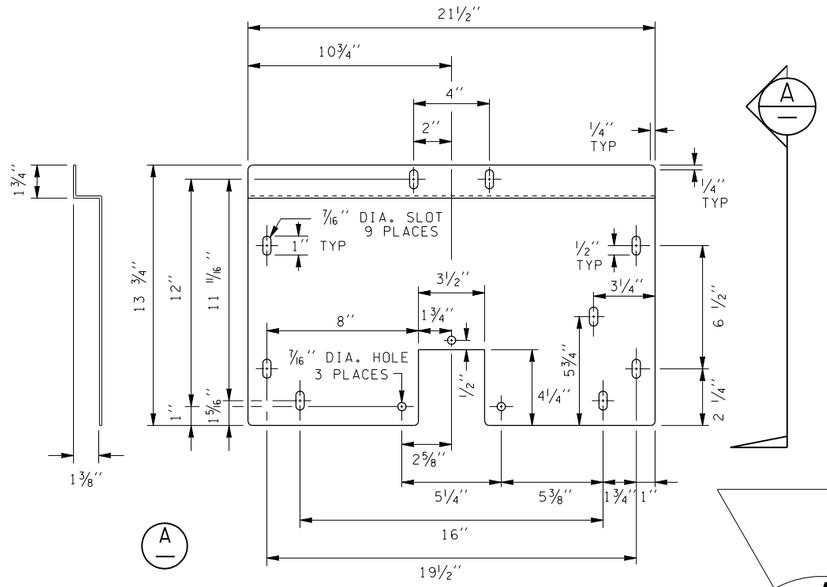

MOUNTING PLATE DETAIL

ITEM AVAILABLE FROM FIXTURE MANUFACTURER.
MATERIAL IS GALV. 10 GAGE STEEL PLATE.

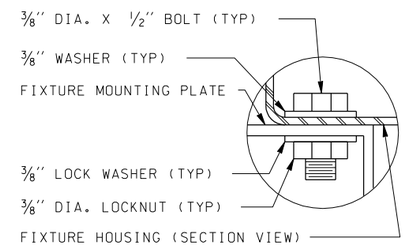

DETAIL A

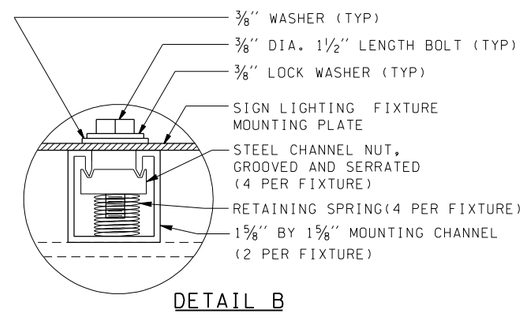

DETAIL B

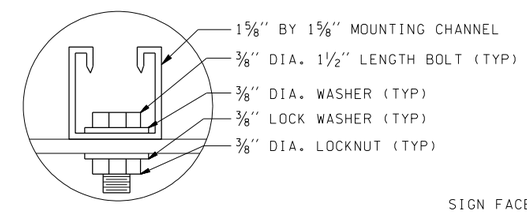

SECTION C

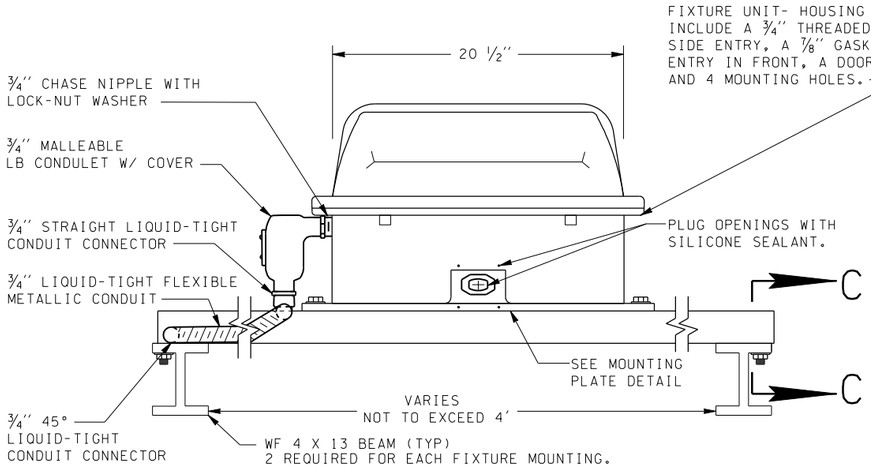

SECTION B

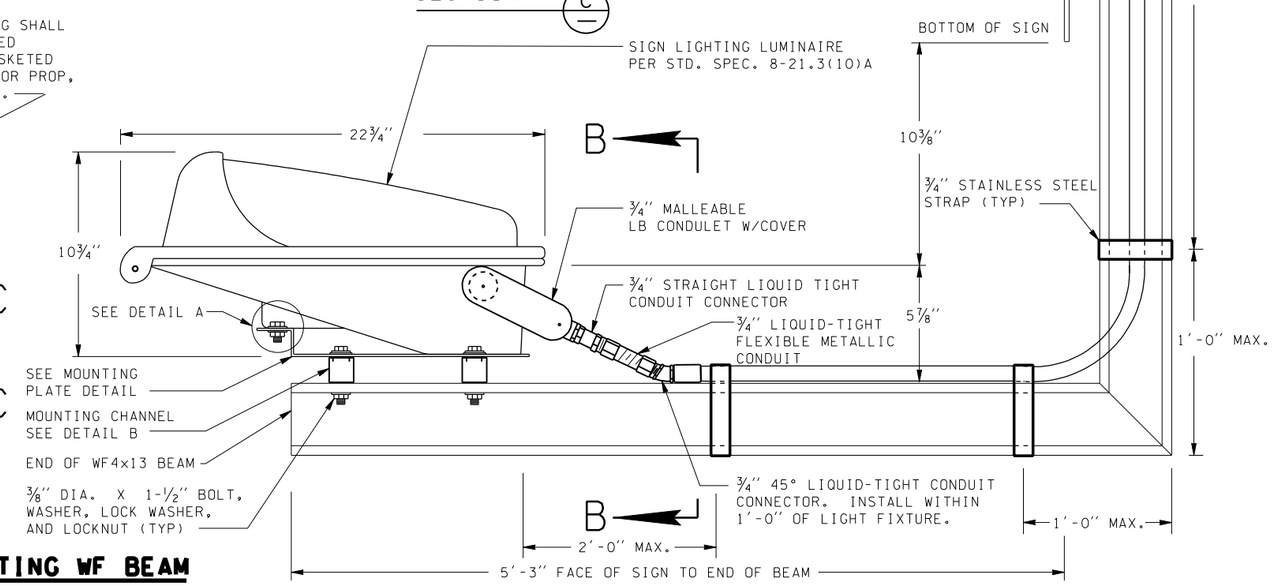

SIGN LIGHT MOUNTING DETAILS WITH EXISTING WF BEAM

(NOT TO SCALE)

FILE NAME	S:\414126\Electrical\MASTER_FILES\DETAILS Homepage\signlighters_e.dgn						
TIME	03:02:42 PM				REGION NO.	STATE	FED.AID PROJ.NO.
DATE	04/07/2005				10	WASH	
DESIGNED BY					JOB NUMBER		
ENTERED BY							
CHECKED BY					CONTRACT NO.		LOCATION NO.
PROJ. ENGR.		NEW WF RETROFIT DETAIL	1-8-01	JH			
REGIONAL ADM.		REVISION	DATE	BY			

P.E. STAMP BOX DATE

P.E. STAMP BOX DATE

Washington State Department of Transportation

ENGLISH

RETROFIT SIGN LIGHT MOUNTING DETAILS FOR MONOTUBE STRUCTURE

WITH EXISTING WF BEAM

PLOT22

3.20E

SHEET OF SHEETS