Building your own pontoon (CSW)

Arrival date: Sept. 18, 2014

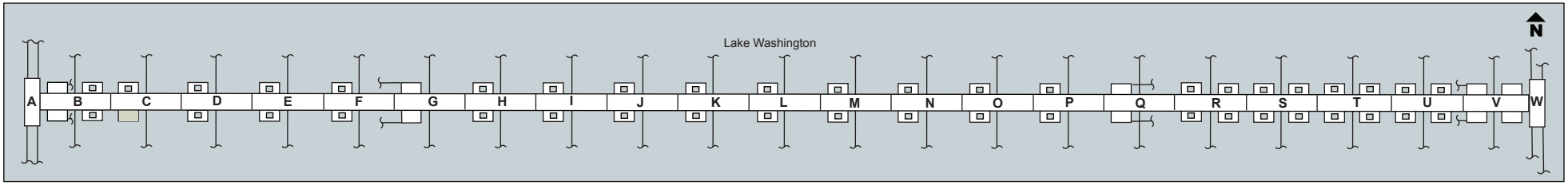

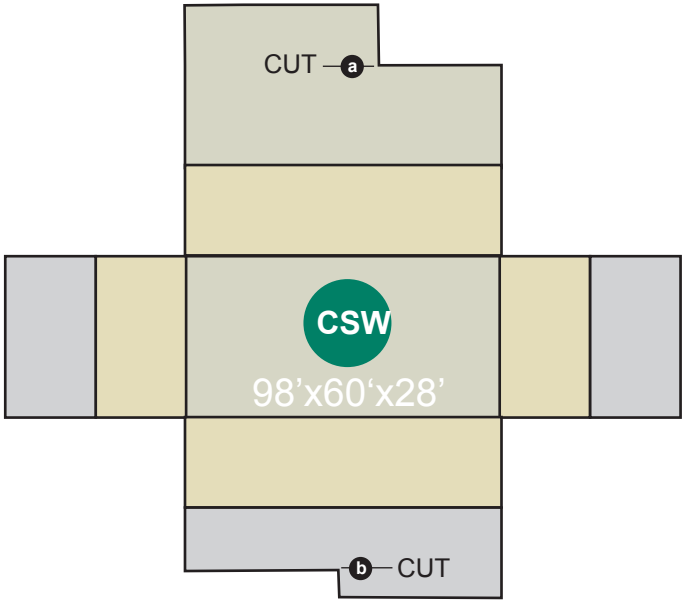

Instruction:
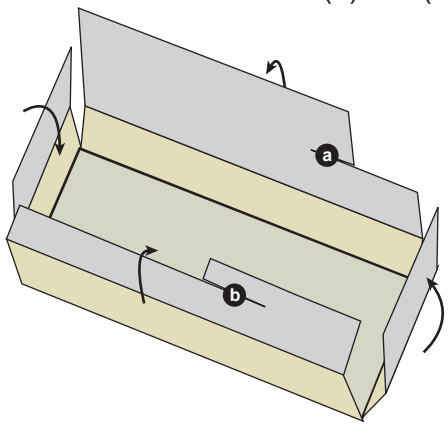
1. Cut around the edge
2. Cut (a) and (b)
3. Fold all flaps in
4. insert (a) into (b)