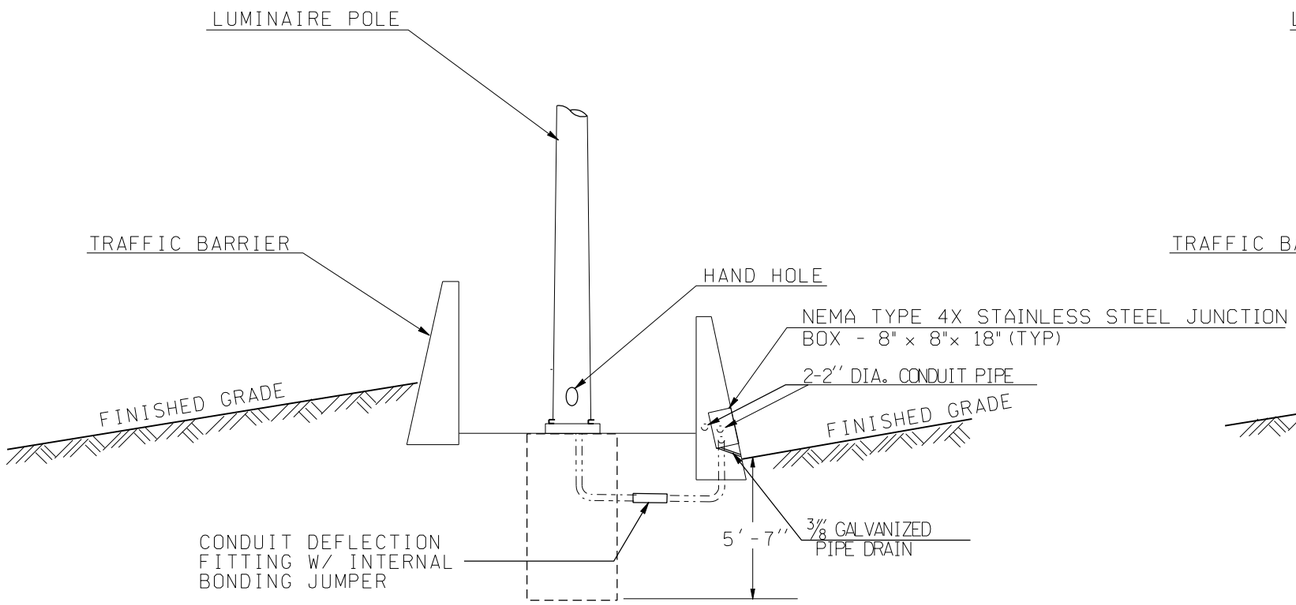

SEE STANDARD PLAN J-1b AND ROADWAY SECTION (FILL IN) FOR APPLICABLE DETAILS

LUMINAIRE NO.	STATION
(FILL IN)	(FILL IN)
(FILL IN)	(FILL IN)

DETAIL A

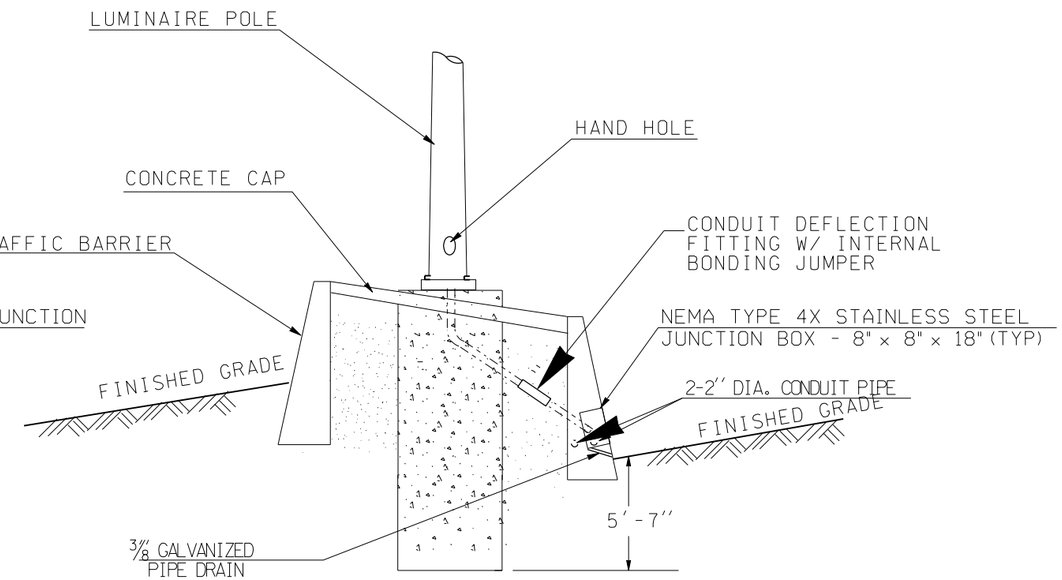

SEE STANDARD PLAN J-1b AND ROADWAY SECTION A FOR APPLICABLE DETAILS

LUMINAIRE NO.	STATION
(FILL IN)	(FILL IN)

DETAIL B

LIGHT STANDARD BARRIER FOUNDATION DETAIL

(FOR BARRIER RAIL DETAILS SEE SHEET XXX-XXX)

FILE NAME	S:\414126\Electrical\MASTER_FILES\DETAILS Homepage\bar_tex.dgn					
TIME	02:05:04 PM					
DATE	04/07/2005					
DESIGNED BY						
ENTERED BY		NEW SHEET PLACEMENT	4-15-03	JH		
CHECKED BY		TEXT EDITS	10-6-99	JH		
PROJ. ENGR.		NEW ENGLISH SHEET	2-9-99	JH		
REGIONAL ADM.		REVISION	DATE	BY		

REGION NO.	STATE	FED.AID PROJ.NO.
10	WASH	
JOB NUMBER		
CONTRACT NO.		LOCATION NO.

DATE
P.E. STAMP BOX

DATE
P.E. STAMP BOX

Washington State Department of Transportation

ILLUMINATION DETAILS

ENGLISH

PLOT4

1.13E

SHEET OF SHEETS