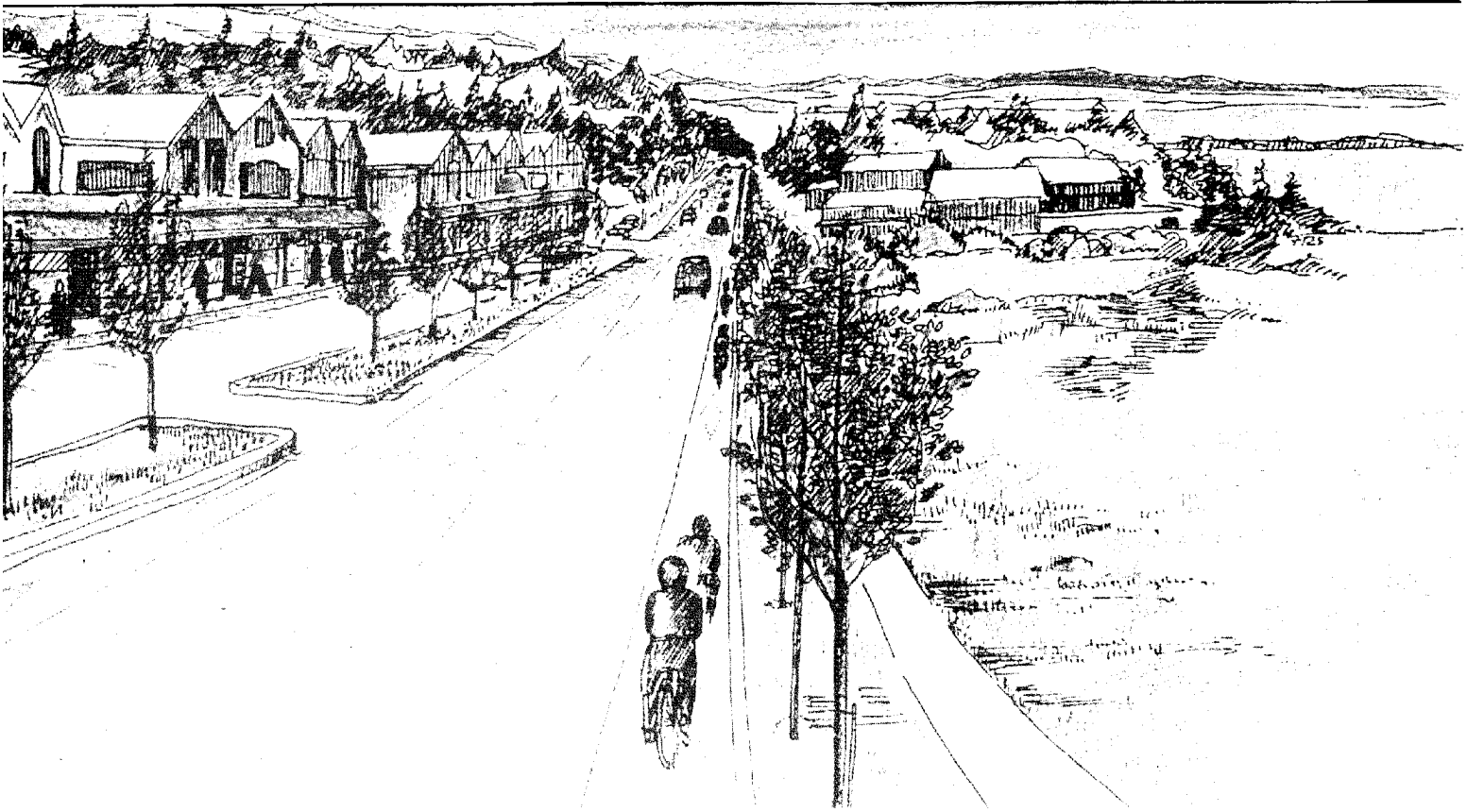

Local Agency Guidelines

Washington State Department of Transportation

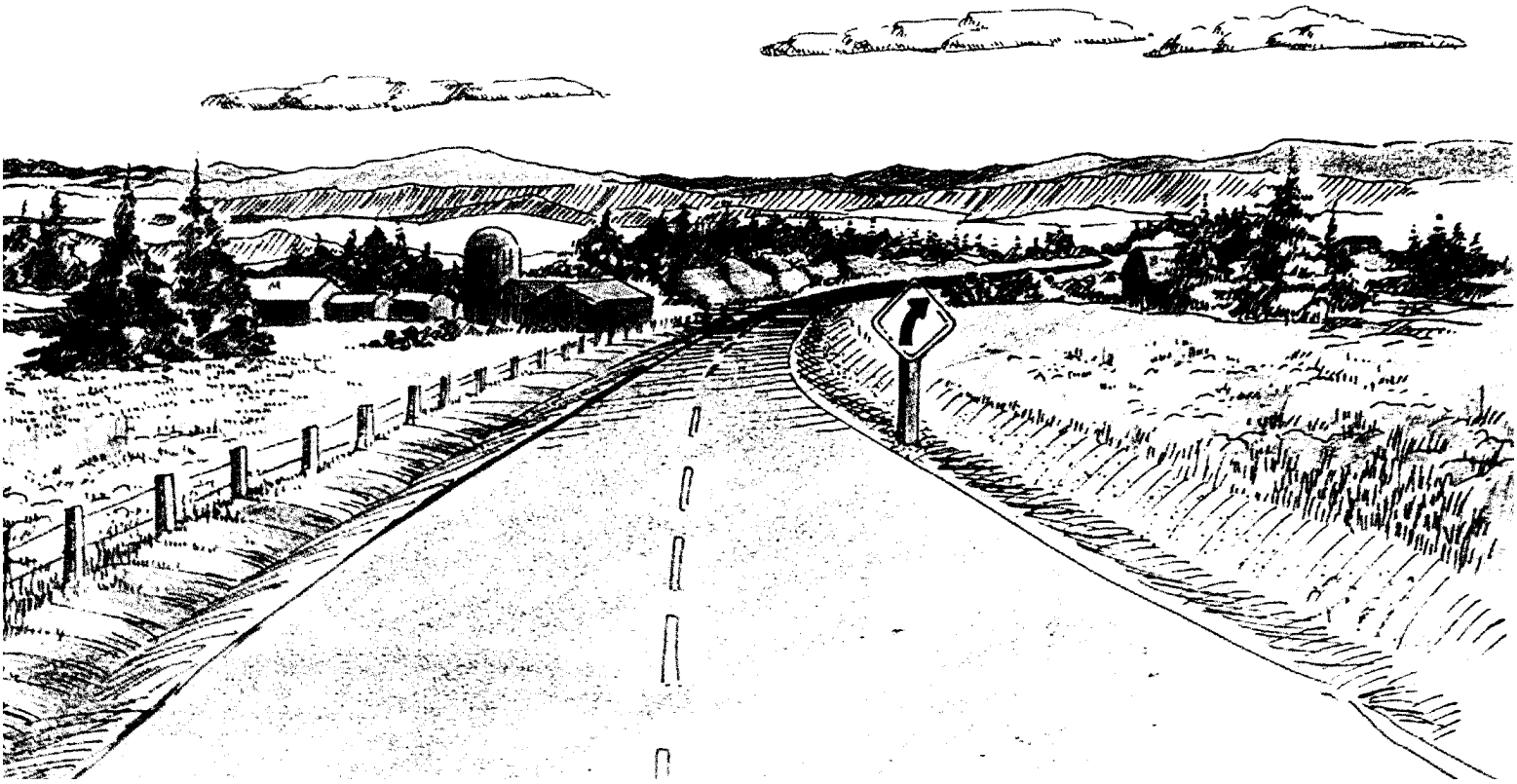

Book No. _____

Local Agency Guidelines

M 36-63

Washington State Department of Transportation
TransAid Service Center

LOCAL AGENCY GUIDELINES

M 36-63

Your manual has been prenumbered and is distributed in accordance with that number so that as changes occur all copies can be updated. If this manual is reassigned or your address changes, please update its location by returning the "Change of Address" form to the address given below. Agencies receiving multiple copies may designate a single person responsible for receipt and distribution of updates and changes.

If you need binders or more manuals, please notify Donna Stallings at (360) 705-7372.

Donna Stallings
WSDOT TransAid Service Center
P.O. Box 47390
Olympia, WA 98504-7390

BOOK # _____

Change of Address or Assigned Person:

Name: _____

Firm Name: _____

Position: _____

Address: _____

_____

Foreword

This manual was published to provide local agencies with statewide policies and standards to follow when using Federal Highway Administration (FHWA) funds for transportation projects. Considerable effort has been made to provide guidance on how to accomplish the work and document the results, and to incorporate the flexibility options provided by the Intermodal Surface Transportation Efficiency Act of 1991 (ISTEA).

The revisions were necessary to incorporate both metric and English units of measurement. This is in response to the new National Highway System bill which defers the requirement to metric to September 30, 2000, with the use of metric until that time optional. It is up to the discretion of an agency on whether to use metric or English units on a project. However, to ensure consistency throughout a project, an agency should decide to use either metric or English units throughout the design and construction phases. The conversions are not all exact (some are and others are rounded) and use of one set of units throughout a project will maintain the credibility of the project specifications.

Numerous committees were involved in this manual, directly and indirectly. A special thanks to the City and County Design Standards and Local Agency Guidelines (LAG) Committee members, and active participation by the Consultant Engineers Council of Washington, the Washington State Department of Transportation (WSDOT) advisors, and the FHWA.

Updating the manual is a continuing process. The LAG Committee will periodically meet to consider changes and issue revisions. Questions, observations, and recommendations are invited. The document comment page is provided to encourage comments. Please use it to transmit comments, including marked copies of manual pages, to the WSDOT TransAid Service Center.

DENNIS B. INGHAM
Assistant Secretary, TransAid

Local Agency Guidelines Committee Members

Cities

Jim Young
Senior Finance Analyst
Seattle Engineering Department
600 Fourth Avenue, Room 400
Municipal Building
Seattle, WA 98104-1826
(206) 684-8065

Bob Alberts
Public Works Director
City of Pasco
412 West Clark
Pasco, WA 99301-5629
(509) 545-3444

Fred French
City Engineer
City of Yakima
129 North Second Street
Yakima, WA 98901-2632
(509) 575-6096

Ron Cameron
City Engineer
City of Tukwila
6300 Southcenter Boulevard
Tukwila, WA 98188-2599
(206) 433-0179

Roy Cross
Public Works Director
City of Kennewick
210 West Sixth Avenue/P.O. Box 6108
Kennewick, WA 99336-6108
(509) 586-4181; ext. 250

Lynn Price
Assistant Division Manager
City of Tacoma
747 Market Street, Suite 520
Tacoma, WA 98402-3769
(206) 591-5277

Counties

Steve Kohn
King County DOT
400 Yesler Way, Room 400
Seattle, WA 98104-2637
(206) 296-8755

Jim Whitbread
County Engineer
Asotin County
135 Second Street
Asotin, WA 99402-9532
(509) 243-2074

Pat Morrissey
County Engineer
Pacific County
P.O. Box 66
South Bend, WA 98586-0066
(360) 875-9368

David Sheridan
Public Works Department
Skagit County
1111 Cleveland Avenue
Mount Vernon, WA 98273-4215
(360) 336-9400

Gary Powell
Engineering Service Manager
Snohomish County
2930 Wetmore Avenue
Everett, WA 98201-4044
(206) 388-6667

Jim Miller
Klickitat County
205 South Columbus, Room 103
Goldendale, WA 98620-9288
(509) 773-4616

Other

Wayne Gruen, Chair
Deputy Assistant Secretary
WSDOT TransAid Service Center
P.O. Box 47390
Olympia, WA 98504-7390
(360) 705-7374

Craig Olson
Transportation Project Coordinator
Association of Washington Cities
1076 SE Franklin
Olympia, WA 98501-1346
(360) 753-4137

Randy Hart
Program Manager
CRAB
P.O. Box 40913
Olympia, WA 98504-0913
(360) 586-7586

Gary Hughes
Senior Policy and Quality Engineer
FHWA (HEO-WA)
711 South Capitol Way, Suite 501
Olympia, WA 98501-1230
(360) 753-9025

Jeff Webber
The Transpo Group
CECW Representative
14335 NE 24th Street, Suite 201
Bellevue, WA 98007-3737
(206) 641-3881

WSDOT TransAid Staff
Kevin Dayton — Operations Engineer
David Mounts — Project Development
Sam Richards — NW Region TransAid
Stephanie Tax — Operations Analyst

5:P:LAGA

Comment Request Form

From: _____ Date: _____

_____ SCAN: _____

_____ Phone: _____

To: Assistant Secretary
TransAid
Washington State Department of Transportation
Transportation Building
P.O. Box 47390
Olympia, WA 98504-7390

Subject: *Local Agency Guidelines* Manual (M 36-63)

Comment (marked copies attached):

Preserve this original for future use • Submit copies only

6:P:LAGa

Contents

Page

Guidelines Overview

Chapter 11 Introduction 1

Chapter 12 FHWA Funding Programs
12.1 General Discussion 3
12.2 Coordination With Planning Agencies 3-5
12.3 Non-NHS Funding Sources 6-11
12.4 Transfer of STP, Enhancement, and CM/AQ Funds to the Federal Transit Administration (FTA) 11
12.5 Appendixes 12-20

Chapter 13 Becoming Certified to Administer FHWA Projects
13.1 General Discussion 21
13.2 Certification Acceptance Features 21
13.3 Certification Acceptance Requirements 21
13.4 Application for Certification Acceptance 21-22
13.5 Certification Acceptance Compliance 22

Chapter 14 Developing Projects Using the Local Agency Guidelines
14.1 General Discussion 23
14.2 Project Development Process Overview 23-24
14.3 Standards 25
14.4 Project Development Process Flow Chart and Checklist 25
14.5 Appendixes 25-40

General Project Development

Chapter 21 The Project Prospectus
21.1 General Discussion 1
21.2 Procedure for Submitting the Planning/TDM Application Package 1
21.3 Procedure for Compiling the Project Application Package 1
21.4 Appendixes 1-16

Chapter 22 The Local Agency Agreement
22.1 General Discussion 17
22.2 Preparation Procedure 17
22.3 Supplemental Agreement 17
22.4 Appendixes 17-28

Page

Chapter 23 Progress Billing

23.1	General Discussion	29
23.2	Billing Procedures for Local Ad and Award and Agency Force Work	29
23.3	Billing Procedures for State Ad and Award	29
23.4	Number and Timing of Submittals	29
23.5	Identification of Federal Aid Participation and Nonparticipation Charges	29-37
23.6	Appendixes	37-42

Chapter 24 Environmental Processes

24.1	General Discussion	43
24.2	Project Classification	43-50
24.3	Procedure for Class I Projects	51-57
24.4	Procedure for Class II Projects	57
24.5	Procedure for Class III Projects	57-59
24.6	Project Reevaluation	59
24.7	Project Reviews	59-60
24.8	Appendixes	60-62

Chapter 25 Right-of-Way Procedures

25.01	General Discussion	63-64
25.02	Right-of-Way Acquisition Procedures	64
25.03	Voluntary Acquisition	64
25.04	Funds for Right-of-Way	64-65
25.05	Appraisal	65-66
25.06	Title	66-67
25.07	Negotiation	67
25.08	Donated Property	67-68
25.09	Administrative Settlements	68
25.10	Relocation	68
25.11	Right-of-Way Certification	68-69
25.12	Property Management	69-70
25.13	Document Retention	70
25.14	Appendixes	70-104

Chapter 26 Disadvantaged Business Enterprises

26.1	General Discussion	105
26.2	Procedures	105-108

Chapter 27 Equal Employment Opportunity and Training

27.1	General Discussion	109
27.2	Specific EEO Requirements	109
27.3	Training	109-110
27.4	Contract Administration	110
27.5	Monitoring During Construction	110-111
27.6	Compliance Review	111

Page

Special Project Development

Chapter 31 Using Consultants

31.1	General Discussion	1-2
31.2	Securing Approval to Hire Consultants	2
31.3	Solicitation and Selection of Consultants	2-3
31.4	Negotiating the Consultant Agreement	3-4
31.5	Standard Agreement	4-5
31.6	Supplements to the Agreement	5
31.7	Managing, Monitoring, and Evaluating the Agreement	5-6
31.8	Appendixes	6-18

Chapter 32 Railroad/Highway Crossing Program

32.1	General Discussion	19
32.2	Selection of Appropriate Warning Devices	19-20
32.3	Project Development Process	20-22
32.4	Other Projects With Railroad Involvement	22
32.5	Appendixes	22-32

Chapter 33 Emergency Relief Program

33.1	General Discussion	33
33.2	Initial Steps Immediately After a Disaster	33-34
33.3	Emergency Relief for Eligible Federal Aid Roads and Streets	34-40
33.4	Emergency Relief for Roads and Streets Not Eligible for Federal Aid	40-41
33.5	Appendixes	41-54

Chapter 34 Bridge Selection and Scoping

34.1	General Discussion	55
34.2	Bridge Selection	55-56
34.3	Bridge Replacement Committees	56
34.4	Bridge Scoping	56-57
34.5	Bridge Funding	57
34.6	Appendixes	57-60

Design

Chapter 41 General

41.1	General Discussion	1
41.2	New Construction/Reconstruction Projects	1-2
41.3	3-R Projects	2-3
41.4	2-R Projects	3
41.5	Low Volume Roads and Streets	3
41.6	Deviations	3
41.7	Appendixes	3-8

			Page
Chapter 42	**Design Standards**		
	42.1	General	9
	42.2	City and County Design Standards	9
	42.3	Appendixes	9-14
Chapter 43	**Location and Design Approval**		
	43.1	General Discussion	15
	43.2	Requirements for Design Approval	15
	43.3	Bridge Design Approval	15-16
	43.4	Value Engineering	16-18
	43.5	Additional Data Required for Special Projects	18
	43.6	Design Approval Notices	18
	43.7	Appendixes	18-22
Chapter 44	**Plans, Specifications, and Estimates**		
	44.1	General Discussion	23
	44.2	PS&E Requirements	23-25
	44.3	Contract Plans	25
	44.4	Specifications	25
	44.5	Estimates	26
	44.6	Appendixes	26-48
Chapter 45	**State Advertising and Award Procedures**		
	45.1	General Discussion	49
	45.2	Submittals	49
	45.3	Procedures	49-50
Chapter 46	**Local Advertising and Award Procedures**		
	46.1	General Discussion	51
	46.2	Procedures	51-52
	46.3	Submittal of Award Data	53
	46.4	Appendixes	53-58

Construction and Post-Construction

Chapter 51	**WSDOT Administered Projects**		
	51.1	General Discussion	1
	51.2	Preconstruction Conference	1
	51.3	Changes and Extra Work	1-2

Page

Chapter 52 Local Administered Projects

52.1	General Discussion	3
52.2	Preconstruction Conference	3
52.3	Quality Control	3-4
52.4	Progress Payments	4
52.5	Changes and Extra Work	4
52.6	Termination of Contract	5
52.7	Compliance With Federal Contract Provisions	5
52.8	Physical Completion of Construction	5-6
52.9	Appendixes	6-12

Chapter 53 Project Closure

53.1	General Discussion	13
53.2	Closure	13
53.3	Project Management Review	13-14
53.4	Financial and Compliance Audit	14
53.5	Appendixes	14-20

Miscellaneous

Chapter 61 Local Agency Force Projects

61.1	General Discussion	1
61.2	PS&E Requirements	1
61.3	PS&E Approval	1
61.4	Fund Authorization	1
61.5	Contract Number	1
61.6	Construction Administration	1-2
61.7	Project by One Agency for Another Agency	2
61.8	Appendixes	2-4

Chapter 62 Enhancement Projects

62.1	General Discussion	5
62.2	Standards	5
62.3	Special Requirements	5
62.4	Minimum Contents of Bid Package	5
62.5	Appendixes	6-8

Chapter 63 NHS Projects

63.1	General Discussion	9
63.2	Types of Eligible Projects	9
63.3	Standards	9
63.4	NHS Certification Acceptance	9
63.5	Project Approval Actions	9
63.6	Other NHS Components	9
63.7	Appendixes	10-14

Page

Chapter 64 Bridge Inspections

64.1	General Discussion	15
64.2	Qualifications/Training of Inspection Personnel	15
64.3	Records and File Requirements	16
64.4	Inspection Types and Frequencies	16-17
64.5	Bridge Load Ratings	17
64.6	Bridge Scour Analysis	17
64.7	Quality Assurance Reviews	18
64.8	Major Bridge Repair Reports	18
64.9	WSDOT and Other Inspection Services	18

Chapter 65 Management Systems

65.1	General Discussion	19
65.2	Review of Maintenance	19
65.3	Management Systems	19-22

List of Forms 1-4

Acronyms and Glossary of Terms 1-12

Index 1-10

7:P:LAGa

Acronyms

AASHTO — American Association of State Highway and Transportation Officials

ACHP — Advisory Council on Historic Preservation

ACP — Asphalt Concrete Pavement

ADA — Americans with Disabilities Act

ADT — Average Daily Traffic

AGC — Associated General Contractors

AMRL — AASHTO Materials Reference Laboratory

ANSI — American National Standards Institute

APWA — American Public Works Association

ATB — Asphalt Treated Base

BIC — Bridge Inspection Committee

BFRC — Benton-Franklin Regional Council

BMS — Bridge Management System

BRAC — Bridge Replacement Advisory Committee

BRR — Bridge Replacement and Rehabilitation, a federal aid funding program administered by FHWA and WSDOT

CA — Certification Acceptance

CAAA — Clean Air Act Amendments of 1990

CCIS — Construction Contracts Information System

CCRL — Cement and Concrete Reference Laboratory

CE (NEPA) — Categorical Exclusions

CE (SEPA) — Categorical Exemptions

CEQ — Federal Council on Environmental Quality

CFR — Code of Federal Regulations

CM/AQ — Congestion Mitigation and Air Quality Program

CMS — Congestion Management System

COA — Condition of Award

COG — Council of Governments

CRAB — County Road Administration Board

C3R — Close, Repair, Rehabilitate, or Replace

CTR — Commute Trip Reduction Legislation

CUF — Commercially Useful Function (DBE)

CZMP — Coastal Zone Management Program

CZMA — Coastal Zone Management Act

DAF — Damage Assessment Forms

DB — Disadvantaged Business

DBE — Disadvantaged Business Enterprise

DCD/DEM — Department of Community Development/ Division of Emergency Management

DEIS — Draft Environmental Impact Statement

DFO — Disaster Field Offices

DHV — Design Hourly Volume

DLI — Washington State Department of Labor and Industries

DNR — Department of Natural Resources

DNS — Declaration of Non-Significance (SEPA Document)

DOC — Federal Department of Commerce

DOE — Washington State Department of Ecology

DOI — Federal Department of the Interior

DOT — Federal Department of Transportation (same as USDOT)

DRM — Disaster Recovery Manager

DSR — Damage Survey Report

DS&S — Decent, Safe, and Sanitary (housing)

DT — Diagnostic Team

DV — Determination of Value

EA — Environmental Assessment; Economic Area

EAC — Enhancement Advisory Committee

ECR — External Civil Rights

EEO — Equal Employment Opportunity

EIS — Environmental Impact Statement

EO — Executive Order

EPA — Federal Environmental Protection Agency

EQA — Environmental Quality Administrator

ER — Emergency Relief

FA — Federal Aid

FAA — Federal Aviation Administration

FAPG — Federal Aid Policy Guide

FAS — Federal Aid Secondary

FAUS — Federal Aid Urban Systems

FEIS — Final Environmental Impact Statement

FEMA — Federal Emergency Management Agency

FERC — Federal Energy Regulatory Commission

FHWA — Federal Highway Administration

FLH — Federal Lands Highway

FMIS — Federal Management Information System

FMV — Fair Market Value

FONSI — Finding of No Significant Impact

FTA — Federal Transit Administration

FWCA — Fish and Wildlife Coordination Act

FWPCA — Federal Water Pollution Control Act

F&WS — Federal Fish and Wildlife Service (also USFWS)

GAR — Governor's Authorized Representative

GMA — Growth Management Act

GSP — General Special Provisions

HBRRP — Highway Bridge Replacement and Rehabilitation Program

HHS, HES — High Hazard and Hazard Elimination

HOV — High-occupancy Vehicle

HPR — Highway Planning and Research Projects

HUD — Federal Department of Housing and Urban Development

IC — Interstate Completion

IDT — Interdisciplinary Team

IISC — Institute ISTEA Steering Committee

IM — Instructional Memorandum (FHWA document)

IM — Interstate Maintenance

IMS — Intermodal Management System

ISTEA — Intermodal Surface Transportation Efficiency Act of 1991

ITE — Institute of Transportation Engineers

LA — Local Agency

LAG — Local Agency Guidelines

LF — Load Factor

LPA — Local Public Agency

LRFD — Load and Resistance Factor Design

LRP — Long-Range Plan

L&I — Washington State Department of Labor and Industries

MOA — Memorandum of Agreement

MPO — Metropolitan Planning Organization

MUTCD — Manual on Uniform Traffic Control Devices

MSA and CMSA — Metropolitan Statistical Area

MSD — Material Sources Data

NAAQS — National Ambient Air Quality Standards

NACHP — National Advisory Council for Historic Preservation

NBI — National Bridge Inventory

NBIS — National Bridge Inspection Standards

NCHRP — National Cooperative Highway Research Program

NEPA — National Environmental Policy Act; see also SEPA

NHS — National Highway System

NICET — National Certification in Engineering Technologies

NMFS — National Marine Fisheries Service

NPDES — National Pollutant Discharge Elimination System

NPS — National Park Service of the Federal Department of the Interior

OA — Obligation Authority

OAHP — Office of Archaeological and Historic Preservation

OEO — WSDOT's Office of Equal Opportunity

OFCCP — Office of Federal Contract Compliance Programs (Department of Labor)

OFM — Washington State Office of Fiscal Management

OJT — On-the-Job Training

OMB — Federal Office of Management and Budget

OMWBE — Washington State Office of Minority and Women's Business Enterprise

OST — Office of the Secretary of Transportation

PCAA — Washington State Planning and Community Affairs Agency

PDA — Preliminary Damage Assessment

PDEIS — Preliminary Draft Environmental Impact Statement

PE — Preliminary engineering; also Professional Engineer

PL — Public Law

PM — Project Manager

PMS — Pavement Management System

P&PSC — Planning and Programming Service Center

PPM — Policy and Procedure Memorandum

PR — Preliminary Report

PSRC — Puget Sound Regional Council

PS&E — Plans, Specifications, and Estimates

PTMS — Public Transportation Management System

RCW — Revised Code of Washington

ROD — Record of Decision

RRP, RRS — Railway-Highway Grade Crossing

RTPO — Regional Transportation Planning Organization

R&D — Research and Development

R/R — Railroad, Railway

R/W — Right-of-Way

SCS — Soil Conservation Service (US Department of Agriculture)

SDWA — Safe Drinking Water Act

SEPA — State of Washington Environmental Policy Act

SHPO — Washington State Historical Preservation Officer

SIP — State Implementation Plan

SMS — Safety Management System

SMSA — Standard Metropolitan Statistical Area

SOV — Single Occupancy Vehicle

SRTC — Spokane Regional Transportation Council

STIP — Statewide Transportation Improvement Program

STP — Surface Transportation Program

Strahnet — Strategic Highway Network

SWIBS — State of Washington Inventory of Bridges and Structures

SWRTC — Southwest Washington Regional Transportation Council

TCP — Traffic Control Plan

TCM — Transportation Control Measures

TDM — Transportation Demand Management

TIP — Transportation Improvement Program

TMA — Transportation Management Areas

TMS — Traffic Monitoring System

TRB — Transportation Research Board

TRICO — Tricounty

TRPC — Thurston Regional Planning Council

TSM — Transportation System Management

TSME — Transportation Systems Management Element

TS&L — Type, Size, and Location Stage of Design

T2 — Technology Transfer

UBIT — Under Bridge Inspection Truck

USC — United States Code

USDA/USDOA — United States Department of Agriculture

USDOL — United States Department of Labor

USDOT — United States Department of Transportation (same as DOT)

USFS — United States Forest Service

USFWS — United States Fish and Wildlife Service (also F&WS)

UZA — Urbanized Area

VE — Value Engineering

WAC — Washington Administrative Code

WCCOG — Whatcom County Council of Governments

WDW — Washington State Department of Wildlife

WOAP — Work Order Accounting Plan

WS — Working Stress

WSDES — Washington State Department of Emergency Services

WSDOT — Washington State Department of Transportation

WSEO — State of Washington Energy Office

WUTC — Washington Utilities and Transportation Commission

YVCOG — Yakima Valley Council of Governments

2-R — Resurfacing and Restoration

3-R — Resurfacing, Restoration, and Rehabilitation

4-R — Resurfacing, Restoration, Rehabilitation, and Reconstruction

8:P:LAGa

Contents

GUIDELINE SECTIONS

Guidelines Overview

- 11 Introduction
- 12 FHWA Funding Programs
- 13 Becoming Certified to Administer FHWA Projects
- 14 Developing Projects Using the Local Agency Guidelines

General Project Development (Applicable to All Projects)

- 21 The Project Prospectus
- 22 The Local Agency Agreement
- 23 Progress Billings
- 24 Environmental Processes
- 25 Right-of-Way Procedures
- 26 Disadvantaged Business Enterprises
- 27 Equal Employment Opportunity and Training

Special Project Development (Applicable to Some Projects)

- 31 Using Consultants
- 32 Railroad/Highway Crossing Program
- 33 Emergency Relief Program
- 34 Bridge Selection and Scoping

Design

- 41 General
- 42 Design Standards
- 43 Location and Design Approval
- 44 Plans, Specifications, and Estimates
- 45 State Advertising and Award Procedures
- 46 Local Advertising and Award Procedures

Construction and Post-Construction

- 51 WSDOT Administered Projects
- 52 Local Administered Projects
- 53 Project Closure

Miscellaneous

- 61 Local Agency Force Projects
- 62 Enhancement Projects
- 63 NHS Projects
- 64 Bridge Inspections
- 65 Management Systems

List of Forms

Acronyms/Glossary of Terms

Index

Contents

GUIDELINE SECTIONS

Guidelines Overview

- 11 Introduction
- 12 FHWA Funding Programs
- 13 Becoming Certified to Administer FHWA Projects
- 14 Developing Projects Using the Local Agency Guidelines

General Project Development
(Applicable to All Projects)

- 21 The Project Prospectus
- 22 The Local Agency Agreement
- 23 Progress Billings
- 24 Environmental Processes
- 25 Right-of-Way Procedures
- 26 Disadvantaged Business Enterprises
- 27 Equal Employment Opportunity and Training

Special Project Development
(Applicable to Some Projects)

- 31 Using Consultants
- 32 Railroad/Highway Crossing Program
- 33 Emergency Relief Program
- 34 Bridge Selection and Scoping

Design

- 41 General
- 42 Design Standards
- 43 Location and Design Approval
- 44 Plans, Specifications, and Estimates
- 45 State Advertising and Award Procedures
- 46 Local Advertising and Award Procedures

Construction and Post-Construction

- 51 WSDOT Administered Projects
- 52 Local Administered Projects
- 53 Project Closure

Miscellaneous

- 61 Local Agency Force Projects
- 62 Enhancement Projects
- 63 NHS Projects
- 64 Bridge Inspections
- 65 Management Systems

List of Forms

Acronyms/Glossary of Terms

Index

June 1997

Purpose

The *Local Agency Guidelines* (LAG) manual is intended to help Washington's public agencies plan, design, construct, and maintain transportation facilities. To assist agencies in accomplishing these goals, the manual describes the processes, documents, and approvals necessary to obtain Federal Highway Administration (FHWA) funds to develop local transportation projects and defray their costs.

The LAG manual is a compilation of information from many sources and is a reference source for administrative and field personnel in any governmental agency. To serve the needs of local agencies, the manual describes development requirements and outlines procedures for obtaining approval when local conditions warrant departures from adopted standards.

TransAid is the division within the Washington State Department of Transportation (WSDOT) which serves local agencies. The Regional TransAid Engineer, the local agency's contact person within WSDOT, is always available to assist local officials with answers to their questions about the manual.

Organization of the Manual

Using the glossary and the cross-references, readers should be able to find answers to most questions regarding procedural requirements for FHWA assisted transportation projects. The manual is organized to reflect the flow of a project through the major phases of development and to incorporate the differing developmental needs of different projects.

The manual is divided into six parts; each part contains one or more chapters which describe the requirements for completing specific project development activities:

Chapters 11-14, discuss Guidelines Overview and:

- Describe the purpose and objective of this manual.
- Provide a list of acronyms and a list of FHWA funding programs for local projects.
- Explain the process for becoming certified to administer FHWA projects.
- Describe the procedure for coordinating local transportation programs with areawide planning agencies.
- Provide an overview of the project development process.

Chapters 11-14 Appendices include:

- A flow chart summarizing major activities required to develop a transportation project.
- A checklist of required approvals.
- A checklist of tasks necessary to complete various project phases.

Chapters 21-27, General Project Development Processes, describe procedures which apply to all FHWA assisted transportation projects.

Chapters 31-34, Special Project Development, describe procedures essential to some types of projects but not needed on **all** projects.

Chapters 41-46, Design, describe design standards for obtaining design phase approvals which must be incorporated into local projects, preparation of contract documents, and contracting for construction. Some of the chapters will apply, depending on whether a project is to be administered by WSDOT or the local agency.

Chapters 51-53, Construction and Post-Construction, describe procedures for administering the project construction phase, describe procedures for closing out FHWA projects. Procedures for state and local construction administration are discussed in separate chapters.

Chapters 61-65, Miscellaneous, describe procedures from the project design approval through the closing of an FHWA project, using the agency's labor, equipment, and materials; the requirements for work on transportation enhancements; work on the National Highway System (NHS); and bridge inspections and management systems for ongoing maintenance.

In each chapter, there is a general discussion section which gives background information, policy, and the rationale for the requirements. This is followed by a detailed description of requirements (procedures, documents, and approvals). In most cases, general discussion appears at the beginning of each chapter, while details of the process appear later in the chapters. Backup data, checklists, sample letters, and instructions for completing forms appear in appendixes to each chapter.

Updating Process

Since FHWA funding programs and eligibility requirements frequently change, the LAG manual is updated periodically. When changes are necessary, WSDOT mails the revised pages to all manual holders.

Comments and suggestions for improvement of the manual are most welcome. They should be directed to the Regional TransAid Engineer, who will forward them to the WSDOT TransAid Service Center where they will be considered in the next revision.

2:P:LAG1

12.1 General Discussion

This chapter describes the distribution of Federal Highway Administration (FHWA) funds administered by the Washington State Department of Transportation's (WSDOT) TransAid Service Center, and presents the basic procedures for local agency participation.

FHWA funds may be used to pay project costs for general transportation planning, preliminary engineering, right-of-way acquisition, construction, and audit. FHWA funds may only be expended after authorization by WSDOT through FHWA. They cannot be used for lobbying efforts.

Donated lands may be used as part of the agencies' match to the project under certain conditions. See Section 25.08 for the seven conditions.

.11 FHWA Funding Programs. For the past 20 years, the FHWA Highway Program was primarily directed toward the construction and improvement of four federal aid systems: Interstate, Primary, Secondary, and Urban. With the passage of ISTEA, roadways eligible for FHWA administered funds are:

- the National Highway System (NHS),
- the Interstate System, which is a component of the NHS, and
- non-NHS routes which include all other functionally classified routes except rural minor collector and local access.

The NHS provides an interconnected system of principal arterials and other highways serving major population centers, international border crossings, ports, airports, public and intermodal transportation facilities, and other major travel destinations to meet national defense needs and to serve interstate and interregional travel.

Routes which must be included on the NHS are principal arterials, interstate highways, highways on the Strategic Highway Network (STRAHNET), major STRAHNET connectors, and congressional high priority routes.

For local agencies, a reimbursement-type program, the Surface Transportation Program (STP), is available for financing STP-eligible transportation projects. The following are the funding categories (see Section 12.3):

- Surface Transportation Program (STP):
  - Regional Competition
  - Statewide Competition
  - Transportation Enhancement
  - Safety (Hazard Elimination and Railroad Grade Crossing)

The following programs also provide FHWA funds to local agencies for transportation projects:

- NHS Supplement
- Emergency Relief Program (ER)
- Bridge Replacement and Rehabilitation (BRR)
- Congestion Mitigation and Air Quality (CM/AQ)

Local agencies with national highway system mileage are provided "NHS Supplement" funds as additions to their STP funds. Section 12.36 provides further information.

.12 Planning Requirements. At the state and federal levels, policies and procedures have been established to provide for areawide coordination of transportation programs.

The metropolitan planning provisions of ISTEA provide an enhanced role for local governments. The Metropolitan Planning Organization (MPO) is responsible for developing, in cooperation with the state and transit operators, a long-range transportation plan and a transportation improvement program (TIP) consistent with the long-range plan. All projects in an MPO area using Title 23 or Federal Transit Act monies must be included in the TIP in order to proceed (refer to Appendix 12.52).

The planning process requires consideration of: land use, intermodal connectivity, methods to enhance transit, and needs identified through new technical management systems.

MPOs with populations over 200,000 are designated as Transportation Management Areas (TMAs). TMAs have project selection authority for regional STP and CM/AQ funds in consultation with the state. Washington MPOs and designated county area lead agencies are given project selection authority for regional STP funds by an agreement developed through the Washington Transportation Policy Institute ISTEA Steering Committee (IISC).

12.2 Coordination With Planning Agencies

ISTEA requires a continuous transportation planning process. That process involves:

- TMA long-range transportation plans
- MPO long-range transportation plans
- a statewide long-range transportation plan
- a Statewide Transportation Improvement Program (STIP)

Development of the STIP includes:

- all TMA transportation improvement programs
- all MPO transportation improvement programs

- all improvement programs for the remainder of the state
- involvement of:
  - local agencies
  - Regional Transportation Planning Organizations (RTPOs)
  - Transportation Management Areas (TMAs)
  - Metropolitan Planning Organizations (MPOs)
  - WSDOT
  - transit agencies
  - the Governor's Office

.21 Statewide Transportation Improvement Program

Introduction

Following are the basic required elements of the STIP, which must be approved by FHWA and the Federal Transit Administration (FTA):

- Identifies all proposed highway and transit projects in the state funded under Title 23 USC and the Federal Transit Act, including Federal Lands projects.
- Incorporates the metropolitan transportation improvement programs approved by the TMAs and MPOs.
- In carbon monoxide, ozone, or PM-10 nonattainment areas, includes projects that conform with the State Implementation Plan (SIP).
- Maintains consistency with expected available funding.
- Identifies selection priorities developed with appropriate consultation and/or coordination with local jurisdictions, metropolitan planning organizations, and Federal Lands agencies.
- Contains all regionally significant transportation projects requiring FHWA or FTA approval, regardless of funding.
- Meets the requirements of 23 USC 135(f), Statewide Planning, coordination with local jurisdictions, and review by FHWA.

TMA and MPO TIPs must:

- Be annually updated and approved by the MPO and the Governor.
- List all projects, including pedestrian and bicycle transportation facilities, to be funded by Title 23 or FTA.
- Have reasonable opportunity for public comment prior to approval.
- Include a list of prioritized projects.
- Include a financial plan for implementing the projects that is also consistent with reasonable expectation of available funding.
- Have projects consistent with the long-range plan.

Additionally, projects funded only with state or local sources may be included in the STIP. For consistency in planning and coordination of projects, agencies are encouraged to include all projects for which funding is secured.

.22 STIP Processes and Responsibilities. The following timelines reflect the general processes and responsibilities reflected in state and federal law to achieve compliance with the list above. This is a very time consuming process. All of the steps noted are dependent upon other steps in the process, and all levels of government in the state of Washington must adopt — and their operations reflect — a high level of cooperation and communication.

The timelines are crucial in managing transportation funding. The times noted are based on reasonable time limits to perform the various functions. Adequate time must also be provided for the physical transmission of paper and data, as well as the discussions and analyses required at the various levels.

Local Agency STIP Timelines

Due Date	Description
15 Mar	Non-MPO lead agencies notify regional partners and interest groups of funding availability and request project submittals.
01 May	TransAid notifies local agencies of deadline to adopt and submit their six-year programs.
31 May	Local agencies submit projects to non-MPO lead agencies to conduct project prioritization and selection process for the next three years.
31 May	TransAid transmits Federal Lands Highway (FLH) programs to appropriate agencies.
15 Jun	MPOs notify regional partners and interest groups of funding availability and request project submittals.
15 Jun	Local agencies advertise for internal six-year program hearings.
30 Jun	Local agencies adopt six-year programs.
31 Jul	Local agencies submit six-year programs to Regional TransAid. Regional TransAid reviews and submits regional TIP to RTPO and TransAid Service Center.
31 Jul	Agencies submit project proposals to MPOs.
15 Aug	RTPOs and WSDOT provide a forum and advertisement for regionwide public workshops, for review of the non-MPO proposals.
15 Sep	RTPOs and WSDOT regions provide public workshops for review of non-MPO project proposals for regions outside of the MPOs.

31 Oct	WSDOT TransAid Service Center assembles the statewide STIP, including all MPO, local, and WSDOT programs, and distributes for public comment.
15 Dec	WSDOT TransAid Service Center submits the Draft STIP to FHWA, FTA, and EPA for beginning the conformity analysis required under the Clean Air Act (when required).
31 Dec	TransAid receives notice of FHWA/FTA approval of the STIP.
31 Dec	Local agencies adopt annual budgets.
1 Jan	All agencies may continue obligating projects.

For detailed information, refer to the *STIP Process Manual*.

.23 Local Agencies Outside MPOs. Local agencies outside MPOs are required to comply with the state six-year programming laws, RCW 35.77.010 and 36.81.121, as well as with federal law under ISTEA, 23 USC, for any projects they wish to do with federal funds.

Project *identification* is accomplished individually for locally and federally funded projects; project s*election* for federally funded projects is accomplished through county area lead agencies (see Appendix 12.56).

Public involvement includes the six-year program hearings and the public comment processes for the regions. Reporting is accomplished through the submittal of the six-year programs to the TransAid Service Center of WSDOT.

.24 TMAs and MPOs. Local agencies inside MPOs are also required to comply with the state six-year programming laws, RCW 35.77.010 and 36.81.121, as well as with federal law for any projects they wish to do with federal funds.

Project identification is generally accomplished individually for locally and federally funded projects with project selection through the MPO for federally funded projects. A separate process is used for federally funded statewide competitive projects including, bridge, safety, enhancements and STP competitive, followed by a confirmation by the MPO.

Public involvement includes the six-year program hearings and the MPO public comment processes. The assembled MPO program must be submitted to the Governor's Office for approval.

Reporting is accomplished through the submittal of the MPO-TIP to the TransAid Service Center of WSDOT and the MPO submittal to the Governor's Office through the WSDOT Planning and Programming Service Center. That MPO TIP is then used to assemble the STIP.

.25 WSDOT. WSDOT has primary responsibility for implementation of the STIP process. This cannot be accomplished without recognizing the requirements of all transportation providers in developing their various TIPs. TransAid, and the WSDOT Planning and Programming Service Center have critical roles in managing the process and funds.

The six regional Program Development Offices and the Washington State Ferries are all deeply involved both in developing their respective programs and in coordinating and prioritizing those programs with the various local agencies and transit agencies. WSDOT not only develops programs internally, but it also competes in all TMAs for regional STP enhancement and statewide competitive funds. In addition, WSDOT may cooperate with local agencies on specific projects. This requires knowledge of all the various processes, as each region and agency will have some unique characteristics in its program development processes.

.26 RTPOs. The Growth Management Act (GMA) requires a regional approach to transportation planning. To facilitate the planning process, the Act authorizes the formation of Rural Transportation Planning Organizations (RTPOs). RTPOs are not involved in project selection but have the responsibility for public involvement in the TIP (unless the locals agree to their acting as lead agency for project selection) (refer to Appendix 12.54 for RTPO map).

In the preparation of long-range plans and TIPs, ISTEA requires consideration of the land use impact of transportation decisions and requires that transportation decisions be made on a regional basis. In Washington, the regional orientation of the planning process is reinforced by vesting planning and project selection authority not only in TMAs, but also in MPOs and in county areas outside MPOs and RTPOs. ISTEA also mandates that long-range plans and TIPs be financially feasible. The goals and requirements of GMA and ISTEA complement each other, and the STP funds help achieve growth management objectives.

ISTEA places considerable new emphasis on transportation planning and programming activities at both the regional and state levels. For the first time, there is a federal requirement for a statewide planning process and a mandate to plan in consultation and coordination with regional planning organizations.

To fulfill the planning mandate of ISTEA, regional planning organizations and the state must provide adequate funding and staff. By agreement within Washington State, the smallest regional planning organizations (RTPOs) and initially county areas outside MPOs, are being offered STP funds specifically earmarked for planning and programming purposes to ensure that the mandate can be met. The regional planning approach also calls for new cooperative intergovernmental relationships and additional opportunities and mechanisms for public participation.

12.3 Non-NHS Funding Sources

.31 Cost Sharing. The following matrix shows the matching share for available programs and project categories.

Program(s)/Project Categories	Subject to Public Lands Adjustment	Minimum Local Share
National Highway System, Surface Transportation Program, Congestion Mitigation and Air Quality Improvement	Yes	13.5%
Bridge Replacement and Rehabilitation (BRR); Timber Bridge Research and Demonstration; Indian Reservation Roads; Bridges; Demonstration Projects; Ferry Boats and Terminal Facilities; State Planning and Research; Intelligent Vehicle Highway Systems; Scenic Byways; Highway Related Safety Grants; Motor Carrier Safety Grants; Bicycle and Pedestrian Facilities	No No	(1)* 20%
Federal Lands Programs Including Indian Reservation Roads, Public Lands Highways and Parkways; Park Highways; and Highway Safety R&D		None
Emergency Relief (first 180 days)		None
Emergency Relief (after 180 days)	Yes	(2)*
Metropolitan Planning	Yes	13.5%
Railroad-Highway Crossing Safety Program	No	10% of PE
Hazard Elimination Program	No	10%
Recreational Trails Grants, Highway Priority NHS Corridor Studies		None

*(1) All demonstration projects are funded at a federal/state local match of 80 percent except for the Tacoma Narrows study which is 100 percent federal.

*(2) Equal to the local share which would be required on the federal aid highway on which the emergency repair happens.

Note: These projects, as well as any others funded with ISTEA funds, must be included in the TIP/STIP.

.32 Surface Transportation Program. STP is a program that may be used by local agencies for any roads (including NHS) that are functionally classified except for local and rural minor collectors. These roads are now collectively referred to as federal aid routes. Bridge, safety, and railroad projects are not restricted to federal aid routes but may be on any public road.

Types of Eligible Projects

Eligible projects include:

- Construction, seismic retrofit, operational improvements, 2-R, 3-R, and 4-R, including the interstate system and bridges.
- Capital costs for transit projects eligible for FTA funding.
- Fringe and corridor parking, carpool, vanpool, bicycle, and pedestrian facilities.
- Highway and transit safety improvements.
- Highway and transit research and technology transfer.
- Capital and operating costs for traffic monitoring, management and control facilities, and programs.
- Surface transportation planning.
- Transportation enhancement activities.
- Certain Clean Air Act transportation control measures (TCMs).
- Development and establishment of management systems.
- Wetlands mitigation — surface drainage.

Contact the Regional TransAid Engineer if clarification of eligibility is needed.

Matching Requirements

The basic program is 80 percent federal/20 percent local. However, this is modified to 86.5 percent/13.5 percent due to adjustments for public lands in Washington. Exceptions are pedestrian or bicycle facilities which are 80 percent federal/20 percent local.

a. STP — Regional Competitive Program

1. Objective — improve transportation facilities based upon regional priorities.
2. Eligibility — projects must be on federally functional roads classified higher than rural minor collector and local access roads. All transportation modes are eligible.
3. Selection Criteria — the criteria and applications procedures are established by the TMA, MPO, RTPO, or lead agency who inform the local agency of the selection.

b. STP — Statewide Competitive Funds

1. Objective — develop, improve, and/or preserve an integrated transportation system that encourages multimodal choices to the public.
2. Eligibility — projects must be on federally functional roads classified higher than local and rural minor collectors.
3. Selection Criteria — the Transportation Improvement Board (TIB) will develop statewide project selection criteria and select projects.
4. Application Procedures:
   - Criteria are established each year by the TIB Board, described in RCW 81.104.030 or 81.104.040.
   - Letters soliciting projects from local agencies, ports, and others are sent out by the TransAid Service Center.
   - Agencies submit proposals to the WSDOT TransAid Service Center. TransAid forwards proposals to the TIB.

- The TIB selects projects for funding based on the prioritization method it establishes.
- TransAid Service Center staff informs the local agencies of TIB's selections.
- Local agencies initiate projects following the procedures in the LAG manual.

c. STP — Transportation Enhancement Program (refer to Chapter 62 for standards)

1. Objective — add value to transportation systems. The following activities are considered enhancements and may be eligible for funding:
   - Pedestrian or bicycle facilities.
   - Acquisition of scenic easements or scenic historic sites.
   - Scenic or historic highway programs.
   - Landscaping and other scenic beautification.
   - Historic preservation.
   - Rehabilitation and operation of historic transportation buildings, structures, or facilities — including historic railroad facilities and canals.
   - Preservation of abandoned railway corridors — including conversion for use as bicycle or pedestrian trails.
   - Control and removal of outdoor advertising.
   - Archaeological planning and research.
   - Mitigation of water pollution due to highway runoff.
2. Eligibility — projects must be one of the ten qualifying activities listed and must be transportation related. Environmental activities must go beyond what is customarily provided in projects.
3. Selection Criteria — projects must be recommended and prioritized by the region (RTPO, MPO) and selected by a statewide advisory committee.
4. Application Procedures:
   - Application requirements are established annually by the Enhancement Advisory Committee (EAC). This committee is chaired by the Deputy Assistant Secretary for WSDOT TransAid Service Center; two county representatives; two city representatives; an Indian Tribal delegate; and one member each for bicycle, pedestrian, trails, and historic/scenic interests.
   - All MPOs/RTPOs sponsor transportation enhancement workshops early each year to inform the public of the program and the process for applying for funding.
   - MPOs/RTPOs establish a schedule for submitting projects. Agencies contact their MPO or RTPO for the schedule requirements.
   - Each MPO/RTPO establishes its own criteria for prioritizing projects and ranks projects within its respective area.
   - Each MPO/RTPO submits its prioritized projects to TransAid Service Center.
   - The EAC reviews the project's proposals and recommends funding for projects, giving equal consideration to:
     - Local priorities as established by the MPO/RTPO.
     - Diversity of projects.
     - Statewide distribution of funding.
   - The EAC submits their recommendations to the WSDOT Secretary of Transportation toward the end of May.
   - The Secretary of Transportation reviews and approves the proposed enhancement projects recommended by the EAC.
   - TransAid Service Center staff informs applicants of their approved projects.
   - Local agencies initiate their projects following the procedures in the LAG manual.

d. Railway-Highway Grade Crossing Program (see Chapter 32 for special requirements)

1. Objective — reduce fatalities, injuries, and damages through improved railway-highway crossings.
2. Eligibility — a crossing on any public road is eligible to receive federal funds. At least half of the available funds shall be designated for the installation of protective devices at railway-highway crossings.
3. Typical Projects — eligible projects include installation of standard signs and markings at all public crossings, installation of train-activated warning devices (crossing surfaces), approach work, illumination for safety, etc.
4. Matching Requirement — federal aid 90 percent with 10 percent local match for the basic safety program with railroad grade crossing 99 percent federal and 1 percent WUTC. See Chapter 32 for more detail.

5. Application Procedures:

   (a) Upon receipt of federal aid allocations, TransAid periodically solicits project proposals from local agencies.

   (b) The request for submittal of project proposals outlines general requirements that projects must meet in order to be considered for funding.

   (c) Project proposals are analyzed and prioritized and projects are selected in cooperation with the Washington Utility and Transportation Commission staff.

   (d) Agencies are notified regarding funding for their projects.

e. Safety Program

1. Objective — improve specific locations which constitute a danger to vehicles or pedestrians as shown by frequency of accidents.

2. Eligibility — projects must be located on a public road system. These projects may include (but are not limited to) intersection improvements, alignment changes, installation of railroad and other protective devices, etc.

   Major reconstruction of appreciable lengths of roadway will not qualify for funding under this program.

3. Funding — federal aid 90 percent with 10 percent local match.

4. Application Procedures:

   (a) Upon receipt of federal aid allocations, TransAid periodically solicits project proposals from local agencies.

   (b) The request for submittal of project proposals outlines general requirements that projects must meet in order to be considered for funding.

   (c) All submittals are prioritized. The number of projects selected depends upon the availability of funds.

   (d) Agencies are notified regarding funding for their projects.

.33 Bridge Replacement and Rehabilitation Program (refer to Chapter 34 for more detail)

a. Objective — replace or rehabilitate roadway bridges over waterways, other topographical barriers, other roadways, railroads, canals, ferry landings, etc., when those bridges have been determined deficient because of structural deficiencies, physical deterioration, or functional obsolescence.

b. Eligibility — bridges on public roads are eligible for funding. Funding for rehabilitation, seismic retrofit, and painting are eligible.

   Long approach fills, connecting roadways, interchanges, ramps, and other extensive earth structures, when constructed beyond the attainable touchdown point are, in general, ineligible for federal participation in the bridge program.

   Local agencies have a 15 percent limit on approach costs for participation in the federal bridge program. TransAid Service Center may authorize additional participation, provided there are unusual conditions that warrant additional funding and the agency submits a request with detailed cost estimates, layout, profiles, and other data to support the request.

   Bridges replaced or rehabilitated using FHWA funds are not eligible for added funding for a 10-year period.

   The following bridge items are to be used by local agencies to determine the bridge and approach work percentages when requesting bridge construction funding:

   1. Bridge Construction — all items typically detailed by bridge designers (concrete, re-bar, piling, barriers, expansion dams, etc.).

   2. Demolition of existing structures.

   3. Detour — all work items required to accommodate the construction of the new bridge.

   4. Structural Excavation and Backfill for Bridge — includes abutments, wingwalls, footings, cofferdams, etc.

   5. Mobilization — prorated by cost of bridge and approach work.

   6. Traffic Control — prorated by cost of bridge and approach work. (The length of time to construct a bridge is usually much longer than construction of the approach roadways.)

   7. Riprap Protecting Bridge Structure Within the Right-of-Way — riprap placed within the right-of-way to protect the structure can be considered a bridge item.

   8. Approach Slab — the approach slab is a reinforced concrete element which protects the bridge end abutments from impacts. The standard plan for approach slabs was designed by WSDOT bridge engineers as a structural element.

   9. Approach Guardrail Transition Section — the approach guardrail is designed to perform as a structural unit to protect traffic from the bridge ends. Approach guardrail systems are installed in accordance with the WSDOT Standard Plans and vary in length.

10. Retaining Walls (up to 6.1 meters (20 feet) maximum distance from the abutment) — retaining walls are structural elements that serve the same function as the standard bridge wing walls and are designed by bridge designers. Retaining walls beyond these limits would be considered approach work.

11. Bridge Drainage — this includes the drainage components necessary to carry water from the structure.

All other work items will be classified as approach or miscellaneous work, and thus are subject to the 15 percent limit, unless approved by TransAid.

c. Typical Projects — projects eligible for funding may include (but are not limited to) the following:

1. Total replacement of a deficient bridge at or near its existing location.

2. Total replacement of a deficient bridge by a new structure in the same general corridor.

3. Removal of a deficient structure and provision of alternate access at or less than the cost of replacement.

4. Rehabilitation or replacement of major structural members that increase the structural integrity and life of the bridge. This may include seismic retrofitting and painting of structure.

d. Matching Requirement — federal aid 80 percent with 20 percent local match.

e. Application Procedure

1. All local agencies must inventory their structures in accordance with the National Bridge Inspection Standards (NBIS) and Washington State Law, with the results being entered according to the *State of Washington Inventory of Bridges and Structures* (SWIBS) procedures.

2. From the inventory data, a priority listing is established. Bridges are funded on a priority basis as funds become available. Projects are evaluated and selected on a priority basis by the Bridge Replacement Advisory Committee (BRAC) which is composed of three representatives each from the counties, cities, and WSDOT.

For procedures for applying for seismic retrofitting or painting categories, contact the Regional TransAid Engineer.

3. Agencies are notified of project selection.

.34 Congestion Management/Air Quality (CM/AQ)

a. Objective — fund transportation projects and programs that will contribute to attainment of National Ambient Air Quality Standards (NAAQS). Although the primary emphasis is on ozone and CO levels in nonattainment areas, some transportation projects and programs addressing air pollution with particulate matter greater than 10 microns (PM-10) may be eligible under certain conditions. The primary intent is for these projects and programs to result in tangible reductions in ozone precursor and CO emissions within a timeframe to allow attainment as provided in the Clean Air Assistant Act (CAAA) of 1990. It is important to note that the Clean Air Act requires highest priority be given to the implementation of the transportation portions of applicable SIPs and TCMs from applicable SIPs.

b. Eligibility — all projects eligible for CM/AQ funds must be included in a conforming transportation plan and TIP, and conform to the requirements of the Clean Air Act. They must also meet the National Environmental Policy Act (NEPA) and be a part of the STIP.

Projects that are eligible for CM/AQ funds include the following. Other projects and programs may also be considered for funding if the activities are innovative and based on promising technologies and feasible approaches which will improve air quality.

- transportation activities in an approved SIP
- transportation control measures (TCMs)
- bicycle and pedestrian facilities and programs
- management systems
- traffic monitoring, management, and control operations
- emission inspection/maintenance programs
- public transit projects
- highway and transit maintenance and reconstruction projects
- planning and air quality monitoring projects
- public/private initiatives

Air quality benefits must be determined and documented to have projects qualify for CM/AQ funds.

CM/AQ funds cannot supplant existing funds. If CM/AQ eligible work is included within a project that is funded by another federal fund source, the CM/AQ eligible work must be funded using the federal fund source for the rest of the project.

Project planning activities are eligible only if the project leads directly to construction of a CM/AQ project; that is, system planning and other nonproject specific planning is not eligible. Developing computerized systems, such as a Geographic Information System, are not eligible. Studies to analyze future transportation needs are eligible only to the extent they are needed to develop project specific construction plans.

Travel demand programs are eligible if the air quality benefits are determined and documented.

Sidewalk extensions and wheelchair ramps are eligible if they are incidental to an eligible CM/AQ project, but are not eligible if they are constructed as modifications to existing curbs.

Paving projects for dust control are eligible only in areas where PM-10 nonattainment has been attributed to transportation sources.

Purchasing of alternate fuel buses and refueling stations for bus fleets requires transfer of CM/AQ funds to FTA and an eligibility determination by FTA.

Transit conversion to alternate fuel requires transfer of CM/AQ funds to FTA and a determination of eligibility by FTA.

Converting municipal fleet operations to alternate fuel source such as compressed natural gas is eligible in areas that require conversion as a measure to meet noncompliance in the Clean Air Act.

Personal rapid transit systems require transfer of CM/AQ funds to FTA and an eligibility determination by FTA.

c. Matching Requirement — Federal participation for most CM/AQ projects is 80 percent which is increased to 86.50 percent due to public lands adjustments. Pedestrian and bicycle activities are limited to 80 percent federal participation. Some activities on the Interstate System can be 90 percent federal participation.

d. Application Procedure — These funds are dedicated to the three Washington State air quality nonattainment areas in the Central Puget Sound, Vancouver, and Spokane areas. Projects are selected and prioritized by the Transportation Management Areas (TMAs) for these regions. The CM/AQ project selection process is:

1. The TMA publishes a request for projects with specific criteria. This is done typically each year. Project criteria will vary between regions.
2. The agency submits candidate projects to the TMA in response to the TMA request. An estimate of the reduction in emissions from the proposed project is required with the project submittal.
3. The TMA prioritizes the submitted projects. Projects that implement the SIP for air quality will receive highest priority.
4. Projects are selected by the TMA based upon the priorities and available funds for inclusion in the TIP and STIP.

For more information, contact the TMA in your region:

- Central Puget Sound Area — Puget Sound Regional Council (PSRC)
- Spokane Area — Spokane Regional Transportation Council (SRTC)
- Vancouver Area — Southwest Washington Regional Transportation Council (SWRTC)

The TMA staff informs the local agencies of the project selections. Local agencies initiate projects following the procedures in the LAG Manual.

.35 Emergency Relief Program (refer to Chapter 33 for details)

a. Objective — repair or reconstruct roadways and bridges on federal aid routes which have suffered serious damage as a result of natural disasters such as floods, hurricanes, tidal waves, earthquakes, severe storms, landslides, or as a result of catastrophic failures from any cause.

b. Eligibility — must have a declared emergency. This fund applies to emergency related repairs on federal aid routes only. Eligible expenditures are those for preliminary engineering, right-of-way, and permanent and emergency construction to restore essential travel, protect remaining facilities, and restore facilities to predisaster conditions.

c. Matching Requirement — federal reimbursement is made at the rate of 100 percent of eligible costs for emergency repairs accomplished within 180 days after the actual occurrence of the disaster. Repairs performed beyond 180 days of the occurrence will be funded at the current program participation ratio for the federal aid program affected.

Generally, restorations or reconstruction will be funded at the current participation ratio regardless of when accomplished.

d. Application Procedure — before emergency funds can be made available:

1. The Governor must declare an emergency.
2. An application for assistance to FHWA must be made by the state.
3. The U.S. Secretary of Transportation must approve the emergency relief funding. For more details, see Chapter 33.
4. Notification of selected projects by FHWA.

.36 National Highway System. The National Highway System (NHS) was authorized by the Intermodal Surface Transportation Efficiency Act (ISTEA) of 1991. Projects constructed on NHS routes are discussed in Chapter 63.

Purpose

The NHS is to provide an interconnected system of principal arterials and other highways to serve major population centers, international border crossings, ports, airports, public and intermodal transportation facilities, and other major travel destinations to meet national defense needs and to serve interstate and interregional travel.

Extent

The targeted NHS length in Washington State is 5 360 kilometers (3,323 miles) composed of 3 787 rural kilometers (2,348 rural miles) and 1 572 urban kilometers (975 urban miles). Approximately 160 local agency kilometers (100 miles) are included.

Routes which serve major ports, airports, international border crossings, public transit and intermodal transportation facilities, and routes on the STRAHNET system can be minor arterials or collectors.

Routes on the NHS must be constructed to the appropriate federal functional classification standards. WSDOT must approve all deviations from these standards; the standards apply to the route regardless of the source of funds for the project.

Any route that provides parallel service to limited access NHS routes may also receive NHS funding even if the parallel route is **not included** on the NHS. Improving the parallel route, however, must benefit the NHS route.

Type of Eligible Projects

That portion of NHS funds attributable each year to local agencies will be exchanged within WSDOT for state Surface Transportation Program (STP) funds. The exchange does not in any way change jurisdictional responsibility for improvements and maintenance of routes designated as NHS.

The local NHS centerline miles represent 2.9 percent of the total NHS centerline miles for the state. Fund distributions to lead regional project selection agencies will be based on the proposed NHS mileage submitted to the FHWA.

Lead agencies are urged to consider the mileage contribution of each agency when selecting projects to be funded with these additional STP funds. Additional STP funds must be included in the TIP/STIP.

Until further notice, the standards used on the NHS system should be the functional classification standards applicable to the given roadway section.

12.4 Transfer of STP, Enhancement, and CM/AQ Funds to the Federal Transit Administration (FTA)

Funds may be transferred from FHWA to FTA for projects that are eligible under FTA. If the project is a traditional transit project, it should be transferred to FTA. If the project involves construction of roads or highways, it should stay with FHWA. For projects that are not clearly transit or highway, the project sponsor should select the administering federal agency. This selection should be done in informal consultation with the two agencies and the Washington State Department of Transportation. Park and ride lots, TDM activities, and intermodal facilities might be eligible under both agencies' programs.

This matrix illustrates the FTA transfer options:

Options for Federal Management Grantee

	FTA	**FHWA**
Transit Rolling Stock	X	
Park and Ride Lots	X	X
Pedestrian Ways	X	X
Refueling Bus	X	
Carpool and Vanpool	X	X
Regional Rideshare	X	X
Commute Trip Reduction	X	X
Bikeways		X
Intermodal Station	X	
Bus and Signal Priority		X
Transit Maintenance and Operations	X	
Ferry Terminals	X	X
Passenger Ferry Vessels	X	
People Mover	X	
Auto Ferry Vessels-Metro (Puget Sound)	X	
Auto Ferry Vessels-Rural		X

If the project is to be implemented through FTA, generally the whole project, including all phases, should be transferred. In some instances (some transit planning studies and selected projects not clearly defined above), funds to a transit agency may be approved though FHWA. Generally, these projects will have their scope of work and administrative oversight administered through WSDOT's Public Transportation and Rail Division.

Once FTA has reviewed the application and it is complete and ready for approval, TransAid will request the transfer of funds from FHWA to FTA. FHWA action to transfer the funds is considered an obligation against the highway obligation ceiling. FTA will subsequently make a grant utilizing the transferred funds.

12.5 Appendixes

12.52 MPO Planning Flow Chart

12.53 Map of MPOs

12.54 Map of RTPOs

12.55 MPO/RTPO Directory

12.56 STP Lead Agencies

Forms

DOT Form 140-049 Six-Year Transportation Improvement Program

3:P:LAG1

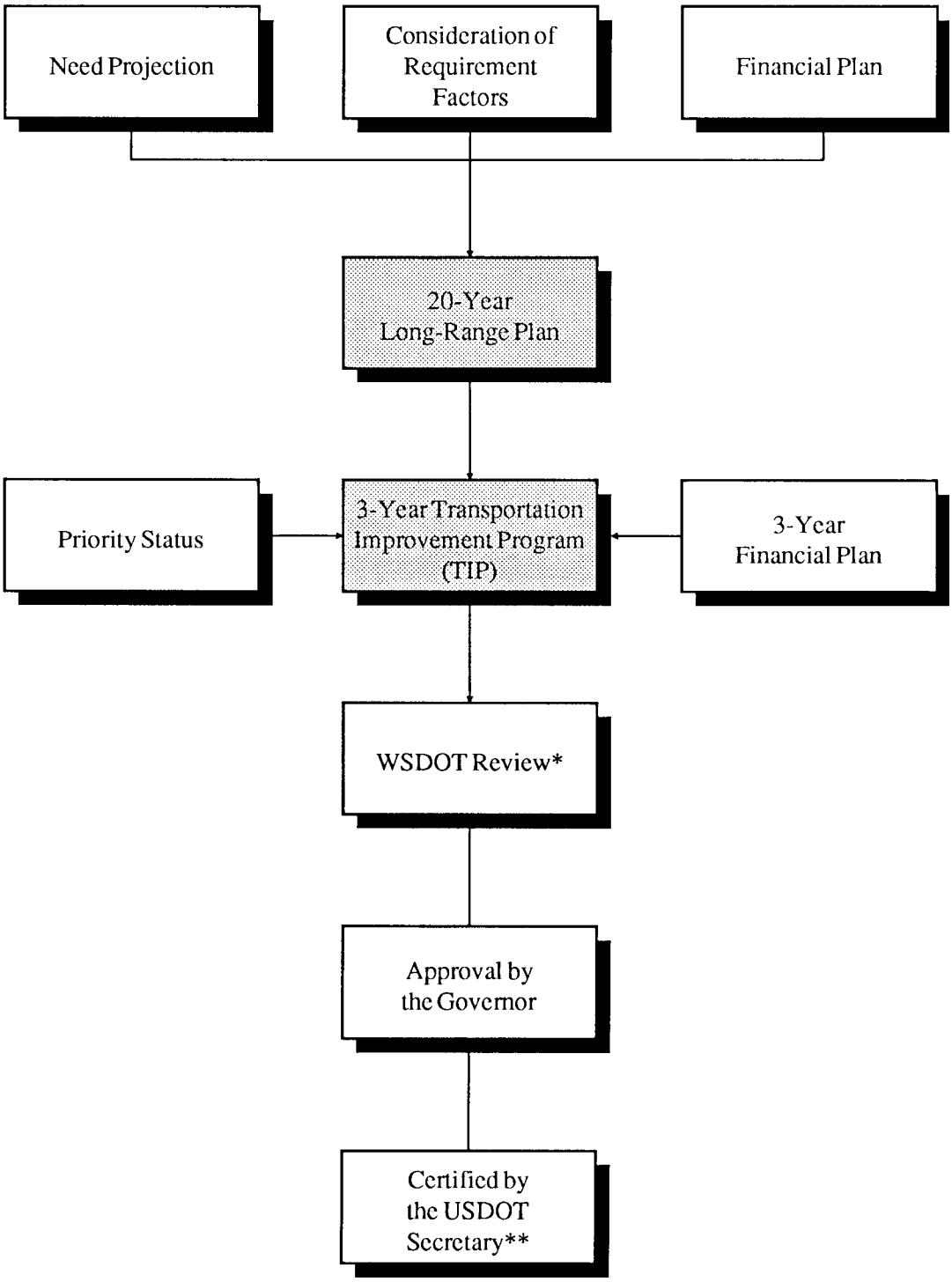

**TMAs exempted.*
***TMAs only.*

Figure 1-1
The Regional Planning and Programming Process Under ISTEA
(Simplified Chart for MPOs)

Metropolitan Planning Organizations

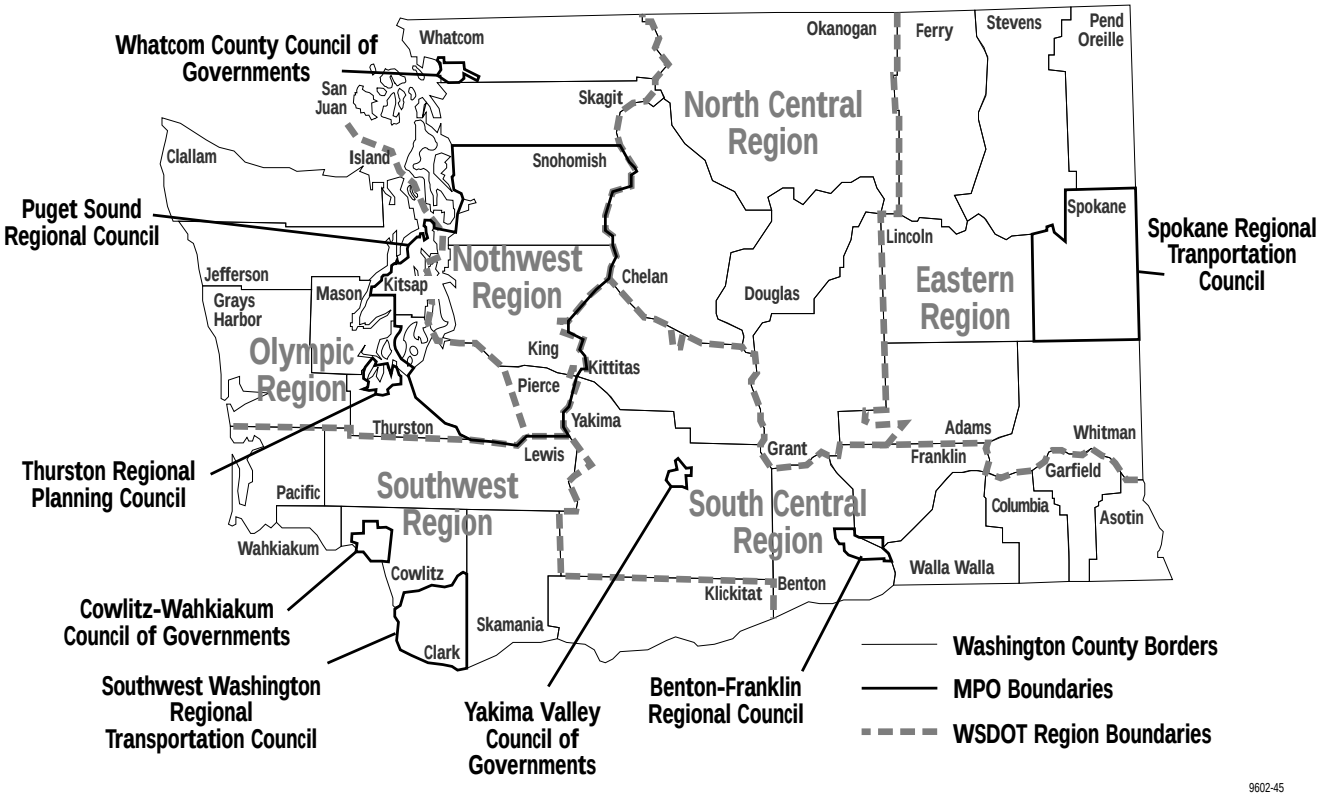

Regional TransAid Engineers

Region	Contact	Telephone
Northwest	Terry Paananen	(206) 440-4734
North Central	Stan Delzer	(509) 663-9657
Olympic	Bob Holcomb	(360) 357-2666
Southwest	Bob Elderkin	(360) 905-2215
South Central	Bill Linse	(509) 575-2580
Eastern	Brent Rasmussen	(509) 324-6080

6:P:LAG1

Regional Transportation Planning Organizations

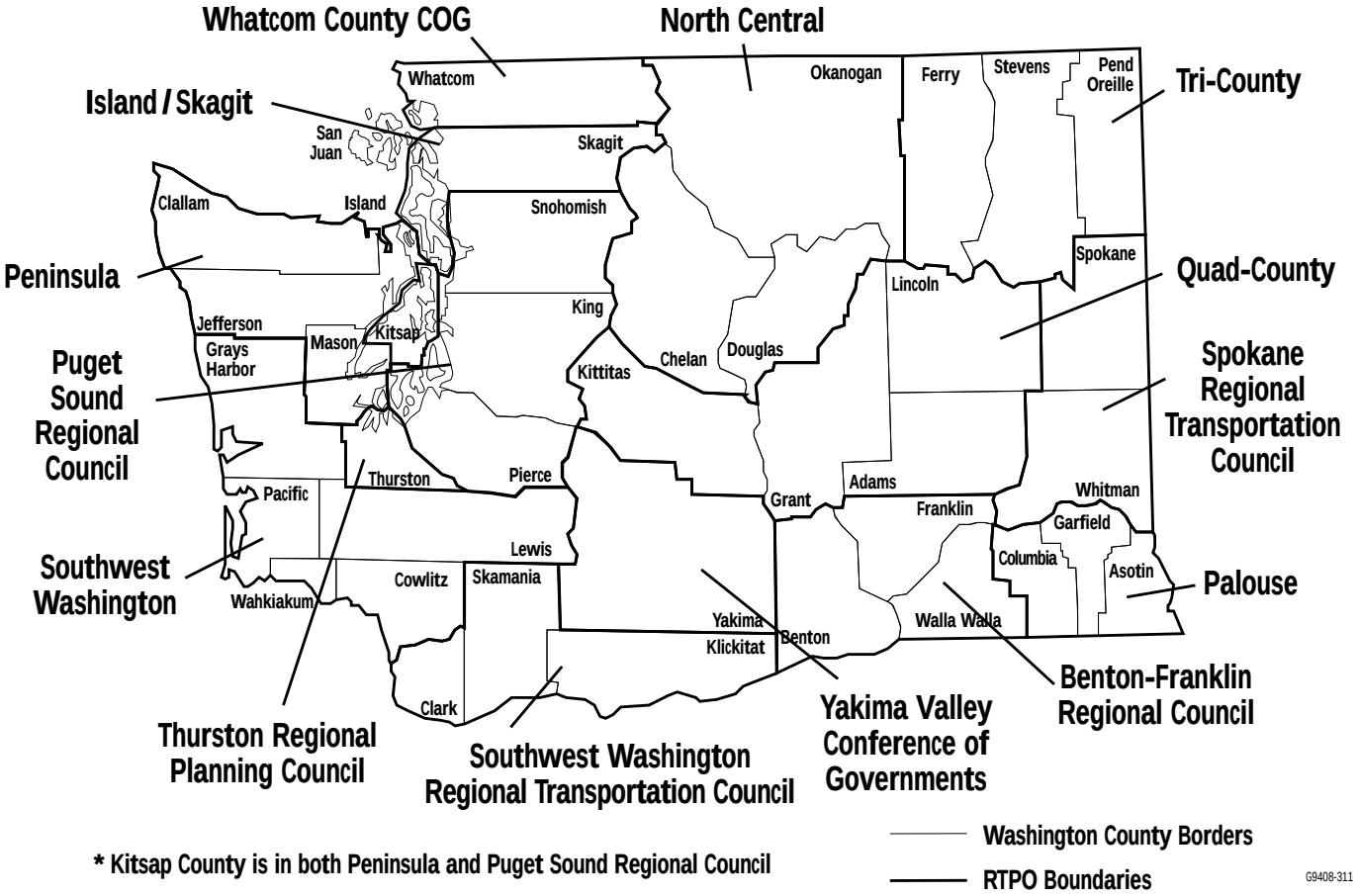

*Kitsap County is in both the Peninsula and Puget Sound Regional Councils.

7:P:LAG1

RTPO	Counties	Lead Agency
Benton-Franklin Regional Council (BFRC)	Benton Franklin Walla Walla	* BFRC 1622 Terminal Drive P.O. Box 217 Richland, WA 99352 Public (509) 943-9185 Fax (509) 943-6756 Donald P. Morton, Executive Director Mark Kushner, Transportation Program Manager
Island/Skagit	Island Skagit	Northwest Region 15700 Dayton Avenue North P.O. Box 330310 Seattle, WA 98133-9710 Bob Aye, Administrator Bob Josephson, Manager of Planning and Local Coordination Public (206) 440-4711 NB-82 (123) Fax (206) 440-4801 or (206) 440-4802 Skagit County Conference of Governments 204 Montgomery Street Mount Vernon, WA 98273 Kelly Moldstad Public (206) 428-1299 Eric Irelan, Transportation Planner Public (360) 428-1082 Fax (360) 336-6116
North Central	Chelan Douglas Okanogan	North Central Region 1551 North Wenatchee Avenue P.O. Box 98 Wenatchee, WA 98801-1156 Public (509) 663-9673 Fax (509) 663-1674 Don Senn, Administrator Dave Honsinger, Transportation Planner Public (509) 662-0504

*Indicates also an MPO.

RTPO	Counties	Lead Agency
Palouse	Asotin Columbia Garfield	Palouse Economic Development Council Northeast 1345 Terre View Drive Pullman, WA 99163 Public (509) 334-3579 Fax (509) 332-6991 Jack Thompson, Executive Director Sid Stecker, Transportation Planner 172 C Highway 395 North Colville, WA 99114 Public (509) 684-3270 Fax (509) 684-4788 (TRICO)
Peninsula	Clallam Jefferson Kitsap Mason	Olympic Region 5720 Capitol Boulevard, MS 7440 P.O. Box 47440 Olympia, WA 98507-7440 Public (360) 357-2605 Fax (360) 357-2601 Gary Demich, Administrator Toby Rickman, Transportation Planning Engineer Public (360) 357-2630
Puget Sound Regional Council (PSRC)	King Kitsap Pierce Snohomish	* PSRC 1011 Western Avenue, Suite 500 Seattle, WA 98104-1035 Public (206) 464-7515 Fax (206) 587-4825 Mary McCumber, Executive Director King Cushman, Director Transportation Public (206) 464-6174
Quad County	Adams Lincoln Grant Kittitas	Kittitas County Department of Public Services Transportation and Traffic Safety 205 West Fifth, Room 108 Ellensburg, WA 98926 Public (509) 962-7523 Fax (509) 962-7663 Greg Gifford, Director Ms. Page Scott, Transportation Planner
Southwest Washington Regional Transportation Council (SWRTC)	Clark Klickitat Skamania	* SWRTC 1351 Officers Row Vancouver, WA 98661 Public (360) 737-6067 Fax (360) 696-1847 Dean Lookingbill, Transportation Director

*Indicates also an MPO.

RTPO	Counties	Lead Agency
Thurston Regional Planning Council (TRPC)	Thurston	* TRPC 2404 Heritage Court Southwest #B MS 0947 Olympia, WA 98502 Public (360) 786-5480 Fax (360) 754-4413 Harold Robertson, Director
Tricounty	Ferry Pend Oreille Stevens	TRICO Economic Development District 347 West Second, Suite A Colville, WA 99114 Public (509) 684-4571 Fax (509) 684-4788 Brent Grening, Executive Director
Whatcom County Council of Governments (WCCOG)	Whatcom	* WCCOG 2011 Young Street Bellingham, WA 98225 Public (360) 676-6974 Fax (360) 738-7302 Jim Miller, Director Gordon Rogers, Transportation Planning Manager
Southwest Washington (SWW)	Cowlitz Grays Harbor Lewis Pacific Wahkiakum	* Cowlitz-Wahkiakum Council of Governments 207 Fourth Avenue North, Admin. Annex Kelso, WA 98626 Public (360) 577-3041 Fax (360) 425-7760 Steve Harvey, Director Rosemary Siipola, Transportation Planner
Spokane Regional Transportation Council (SRTC)	Spokane Whitman	* SRTC 6th Floor Municipal Building West 808 Spokane Falls Boulevard Spokane, WA 99201-3333 Public (509) 625-6370 Fax (509) 625-6988 Glenn Miles, Transportation Manager
Yakima Valley Conference of Governments (YVCOG)	Yakima	* YVCOG 6 South Second Street, Suite 605 Yakima, WA 98901 Public (509) 574-1550 Fax (509) 574-1551 Lon D. Wyrick, Director Leonard Pavelka, Transportation Planner

*Indicates also an MPO.

Adams County
Asotin County
Benton-Franklin Regional Council
Chelan County
Clallam Long Range Transportation Planning Office
Columbia County
Cowlitz County
Douglas County
Ferry County
Franklin County
Garfield County
Grant County
Grays Harbor Regional Planning Committee
Island County
Jefferson County
Kittitas County
Klickitat County
Lewis County
Lincoln County
Mason County
Okanogan County
Pacific Regional Planning
Pend Orielle County
Puget Sound Regional Council
San Juan County
Skagit County Council of Governments
Skamania County
Southwest Washington Regional Transportation Council
Spokane Regional Transportation Council
Stevens County
Thurston Regional Planning Council
Wahkiakim County
Walla Walla County
Whatcom County Council of Governments
Whitman County
Yakima Valley Conference of Governments

8:P:LAG1

Washington State
Department of Transportation

Six Year Transportation Improvement Program
19 _____ to 20 _____

Agency _____
County No. _____
City No. _____
MPO _____

Hearing Date _____
Adoption Date _____
Resolution No. _____

FUNCTIONAL CLASS	PRIORITY NUMBER	PROJECT IDENTIFICATION A. FEDERAL AID NO. B. BRIDGE NO. C. PROJECT TITLE D. STREET/COUNTY ROAD NAME OR NUMBER E. TERMINAL BEGINNING AND END F. DESCRIBE WORK TO BE DONE	IMPROVEMENT TYPE (S)	STATUS	TOTAL LENGTH	UTILITY CODE(S)	PROJECT COSTS IN THOUSANDS OF DOLLARS		FUND SOURCE INFORMATION						EXPENDITURE SCHEDULE (Local Agency)				FEDERALLY FUNDED PROJECTS ONLY	
									FEDERAL FUNDING											
							PR0JECT PHASE	MONTH/ YEAR PHASE STARTS	FEDERAL FUND CODE	FEDERAL COST BY PHASE	RAP CAPP TIA UATA OTHER	STATE FUNDS	LOCAL FUNDS	TOTAL	1st	2nd	3rd	4th thru 6th	ENVIR. TYPE	R/W REQ Y/N DATE MONTH/YR
1	2	3	4	5	6	7	8	9	10	11	12	13	14	15	16	17	18	19	20	21
							PE												EIS	Y / N
							R/W												CE	
							CONST													DATE
							TOTAL												EA	---------
							PE												EIS	Y / N
							R/W												CE	
							CONST													DATE
							TOTAL												EA	---------
							PE												EIS	Y / N
							R/W												CE	
							CONST													DATE
							TOTAL												EA	---------
							PE												EIS	Y / N
							R/W												CE	
							CONST													DATE
							TOTAL												EA	---------
							PE												EIS	Y / N
							R/W												CE	
							CONST													DATE
							TOTAL												EA	---------

DOT Form 140-049
Revised 9/95

Distribution: 2 Copies - Regional TransAid Engineers , 1 Copy - Transportation Improvement Board
1 Copy - C.R.A.B. (Counties Only) , 1 - Copy M.P.O.

◆ **Supersedes Previous Editions** ◆

Six Year Transportation Improvement Program
Instructions for Preparing the Form

Include all projects regardless of location or source of funds. Complete the form for the six year program in accordance with the following instructions.

Heading

Agency	Enter name of the sponsoring agency.
County Number	Enter the OFM assigned number. (See LAG Appendix 21.37.)
City Number	Enter the OFM assigned Number. (See LAG Appendix 21.38.)
MPO	Enter the name of the associated MPO (if located within urbanized area).
Hearing Date	Enter the date of public hearing.
Adoption Date	Enter the date this program was adopted by council or commission.
Resolution Number	Enter Legislative Authority resolution number if applicable.

Column Number

1. **Functional Classification.** Enter the appropriate two-digit code denoting the Federal Functional Classification. (Note: The Federal Functional Classification must be approved by FHWA.)

Description

Rural (under 5,000 area)		Urban (over 5,000 areas)	
01	Interstate	11	Interstate
02	Principal Arterial	12	Freeways & Expressways
06	Minor Arterials	14	Other Principal Arterials
07	Major Collector	16	Minor Arterial
08	Minor Collector	17	Collector
09	Local Access	19	Local Access
00	No Classification	00	No Classification

2. **Priority Number.** Enter local agency number identifying agency project priority (optional).
3. **Project Identification.** Enter (a) Federal Aid Number if previously assigned; (b) Bridge Number; (c) Project title; (d) Street/Road Name or Number/Federal Route Number; (e) Beginning and Ending Termini (mile post or street names); and (f) Describe the Work to be Completed.
4. **Improvement Type Codes.** Enter the appropriate federal code number(s).

Description

01	New construction on new alignment	12	Safety/Traffic Operation/TSM
02	Relocation	13	Environmentally Related
03	Reconstruction	14	Bridge Program Special
04	Major Widening	21	Transit Capital Project
05	Minor Widening	22	Transit Operational Project
06	Other Enhancements	23	Transit Planning
08	New Bridge Construction	24	Transit training /Administration
09	Bridge Replacement	31	Non Capital Improvement.
10	Bridge Rehabilitation	32	Non Motor Vehicle Project
11	Minor Bridge Rehabilitation		

5. **Funding Status.** Enter the funding status for the entire project which describes the current status.

F	Project is selected and funding has been secured by the lead agency.
S	Project is subject to selection by an agency other than the lead.
P	Project is listed for planning purpose and funding is not secured.

6. **Total Length.** Enter project length to the nearest hundredth miles (or code "00" if not applicable).
7. **Utility Code(s).** Enter the appropriate code letter(s) for the utilities that would need to be relocated or are impacted by the construction project.

C	Cable TV	S	Sewer (other than agency owned)	G	Gas
P	Power	T	Telephone	W	Water
O	Other				

8. **Project Phase.** Select the appropriate phase code of the project.

PE	Preliminary Engineering only (or planning)
RW	Right of Way or land acquisition only (or equipment purchase)
CN	Construction only (or transit operating)
ALL	All Phases from Preliminary Engineering through Construction

9. **Phase Start Date.** Enter the month/day/year in MM/DD/YY format that the selected phase of the project is actually excepted to start.
10. **Federal Funds Source.** Enter the Federal Fund Source code from the table.

BR	Bridge Replacement or Rehab.	S9	FTA Urban Areas
CMAQ	Congestion Mitigation Air Quality	STP(C)	STP Statewide Competitive Program
DEMO	ISTEA Demo Projects (Selected)	STP(E)	STP Transportation Enhancements
IC	Interstate Construction	STP(S)	STP Safety including Hazard & RR
IM	Interstate Maintenance	STP(R)	STP Rural **regionally selected**
NHS	National Highway System	STP(U)	STP Urban **regionally selected**
S16	FTA Elderly & Disabled Persons	STP	STP all other STP project not listed
S18	FTA Rural Areas	Other	All other Federal Funds Sources
S3	FTA Discretionary for Capital Expenditure		

11. **Federal Cost.** Enter the total federal cost ***(in thousands)*** of the phase ***regardless*** of when the funds will be spent.
12. **State Funds Code.** Enter appropriate for any of the listed funds to be used on this project.

CAPP	County Arterial Preservation Program	RAP	Rural Arterial Program
TIA	Transportation Improvement Account	UATA	Urban Arterial Trust Account
PWTF	Public Works Trust Fund	Other	i.e. WSDOT

13. **State Funds.** Enter all funds from State Agencies ***(in thousands)*** of the phase ***regardless*** of when the funds will be spent.
14. **Local Funds.** Enter all funds from local Agencies ***(in thousands)*** of the phase *regardless* of when the funds will be spent.
15. **Total Funds.** Enter the Sum of columns 10, 12, and 14.

16-19. **Expenditure Schedule - (1st, 2nd, 3rd, 4th thru 6th years).** Enter the estimated expenditures ***(in thousands)*** of dollars by year. This data is for Local Agency use.

20. **Environmental Data Type.** Enter the type of environmental assessment that will be required for this project. This is required for **Federally Funded projects only**.

EIS	Environmental Impact Statement	CE	Categorical Exclusion
EA	Environmental Assessment	NA	Not Applicable/Unknown

21. **R/W Certification.** Circle Y if Right of Way acquisition is required. If yes, Enter R/W Certification Date if known. This is required for **Federally Funded projects only.**

13.1 General Discussion

Certification Acceptance (CA) is a program in which the Federal Highway Administration (FHWA) delegates authority to the Washington State Department of Transportation (WSDOT) for approving project development and construction administration. WSDOT has the option of delegating some or all of this authority to qualified local agencies, state or federal agencies, or Indian tribes. This procedure permits a local agency to retain more of the approval authority at the local level when developing FHWA assisted transportation projects. The CA program does not eliminate any project development procedures. Benefits of CA to a local agency include savings in time and money since the agency has the authority to develop, advertise, award, and manage its own projects.

CA requires local agencies to commit sufficient staff and other resources to project administration to ensure that all applicable state and federal requirements are met, and that the work can be accomplished efficiently. Once a local agency has been certified, the certification agreement remains in effect indefinitely unless rescinded due to lack of performance or modified by one of the parties.

A CA local agency has the option of requesting that WSDOT or another CA agency administer any given project.

A local agency which has not been certified to administer FHWA projects must obtain the approval of the Regional TransAid Engineer to enter into agreement with a CA agency for administration of the project.

13.2 Certification Acceptance Features

A certified agency is the approving authority for administering FHWA funded projects in the following project items:

a. Location and design.

b. Utility agreements.

c. Railroad agreements.

d. Standard consulting engineering agreements.

e. Public hearings, findings, and orders.

f. Plans, specifications, and estimates.

g. Tied bids.

h. Advertising periods of less than three weeks.

i. Advertisement and award of construction contracts.

j. Construction administration.

k. Construction material testing and testing personnel.

FHWA and WSDOT retain approval authority for the following:

a. Authorization of FHWA funds.

b. Environmental requirements for NEPA.

c. Right-of-way certification.

d. Final inspection of NHS routes or large and complex projects and Emergency Relief (ER) projects.

e. Equal employment opportunity programs.

f. DBE.

g. Nonstandard Consultant Agreements, when applicable.

Only local agencies with full CA status may construct federal aid projects using agency forces.

13.3 Certification Acceptance Requirements

a. Projects must be administered in accordance with this manual.

b. Projects must be administered by a Professional Civil Engineer registered in the state of Washington who is either on staff as a public employee or is a contract employee designated as the agency's Engineer.

c. The agency shall have sufficient expertise and capability to perform and supervise the design, PS&E, and construction-administration phases of the project.

d. The local agency must have designated an official approving authority for all WSDOT-delegated project approvals. This authority (e.g., agency executive or policy body) must officially approve each project step for which it is the approving authority, as identified in the agreement.

13.4 Application for Certification Acceptance

A local agency wanting to operate under Certification Acceptance procedures must submit two copies of the Certification Acceptance Qualification Agreement and their Table of Organization to the Regional TransAid Engineer. A "Certification Acceptance Qualification Agreement" form is enclosed and is available through the WSDOT Regional TransAid Engineer.

After receiving the CA Qualification Agreement, the Deputy Assistant Secretary for TransAid or designee will conduct an interview with the local agency administrators to determine whether the agency is capable of administering an FHWA-funded project. Areas of consideration will be a determination of past performance, current staffing, overall capability, and knowledge of FHWA and state requirements.

Based on the interview, the Deputy Assistant Secretary for TransAid will consider the following options:

a. Permit full administration of all projects by the local agency;

b. Allow limited local agency administration on a project-by-project basis;

c. Allow local agency administration on projects up to a maximum dollar limit; or

d. Deny Certification Acceptance.

The definitions of the various level of CA approvals are outlined below:

Non-CA Status

All projects must be administered and work performed by the region or another CA agency.

Modified CA Status (Individual Project Approval)

Approval to perform specific aspects of a project under a plan developed by the agency and approved based upon review and interviews by the TransAid Operations Engineer. This category allows projects of smaller sizes to be performed in part by the agency depending upon their capabilities, considering the character of the work, dollar value of the project, and duration and complexity. The project plan shall address how each of the following phases of the work will be performed.

- Financing approvals — accounting/billing capabilities.
- Development of plans, specifications, and estimates.
  - a. Consultant involvement, selection, and monitoring.
  - b. Approval of contract documents.
- Advertising and award or use of local agency forces.
- Contractor or local agency monitoring and documentation.
- Final acceptance and records review.

Full CA

Delegation of authority to an agency as authorization in the *Local Agency Guidelines* manual. The first project will be considered a trial service. A favorable performance managment review (PMR) will confirm full CA status.

Probationary CA

Reduced delegation of authority of a CA agency to a project or phase of a project as the result of poor past performance as evidenced by either a PMR or Documentation Review. Continuation in a Probationary CA status, reinstating to Full CA status, or complete removal of CA status will be reviewed on a project-by-project basis as evidenced by a PMR or Documentation review.

13.5 Certification Acceptance Compliance

The WSDOT Regional TransAid Engineer will consult and advise the CA agency concerning the project-management procedures to be followed. The level of this assistance will depend on the nature of each project and the demonstrated capabilities of the local agency. In addition, the Deputy Assistant Secretary for TransAid will annually select projects for an in-depth procedural review. Typical procedural review questions and documents to be examined during this review are listed in Chapter 53.

The local agency may lose CA status or be placed on probationary CA if problems are identified during project management reviews or documentation reviews by the TransAid staff or during:

- An audit by the State Auditor.
- During final project inspections.
- If the qualifications and experience of the agency staff are significantly downgraded.

If a vacancy occurs in the positions described in the CA Agreement as “Approving Authority,” the Regional TransAid Engineer shall be notified and may schedule an interview of the replacement person.

The loss of CA status and reinstatement conditions will be outlined in a letter from the TransAid Operations Engineer.

Forms

Certification Acceptance Qualification Agreement

Certification Acceptance Interview Form

11:P:LAG1A

Certification Acceptance Qualification Agreement

AGENCY _____ AGENCY NO. _____

The agency agrees to comply with the following requirements when developing all Federal Highway Administration (FHWA) projects under _____ CA status.

1. Adherence to the *Local Agency Guidelines* and all policies and procedures promulgated by the Washington State Department of Transportation (WSDOT) which accomplish the policies and objectives set forth in Title 23, U.S. Code, Highways, and the regulations issued pursuant thereto.

2. The overall approval authorities and conditions will be as follows:

   a. The designs will be reviewed and approved by the following state of Washington registered Professional Civil Engineer.

      _____
      Position Title Only

   b. The hearing's findings (if required) will be reviewed and approved by the following official or officials.

      _____
      Position Title or Titles Only

   c. The contract plans, specifications and estimate of cost will be reviewed and approved by the following state of Washington registered Professional Engineer.

      _____
      Position Title or Titles Only

   d. Agreements will be signed by the following responsible local official:

      (1) Railroad _____
      Position Title Only

      (2) Utility _____
      Position Title Only

      (3) Consultant _____
      Position Title Only

      (4) Technical Services _____
      Position Title Only

   e. The award of contract will be signed by the following responsible local official.

      _____
      Position Title Only

   f. All projects will be constructed in conformance with the Washington State Department of Transportation/American Public Works Association (WSDOT/APWA) current *Standard Specifications for Road, Bridge, and Municipal Construction* and such specifications that modify these specifications as appropriate. Multimodal enhancement projects shall be constructed in conformance with applicable state and local codes.

   g. The contract administration will be supervised by the following state of Washington registered Professional Civil Engineer.

      _____
      Position Title Only

   h. Construction administration and material sampling and testing will be accomplished in accordance with the WSDOT *Construction Manual* and the *Local Agency Guidelines.*

3. The agency agrees that they have the means to provide adequate expertise and will have support staff available to perform the functions being subdelegated. The support staff may include consultant or state services.
4. The agency agrees that the signature on each project prospectus and local agency agreement will be consistent with section 2 above.
5. All projects under Certification Acceptance shall be available for review by the FHWA and the state at any time and all project documents shall be retained and available for inspection during the plan development and construction stages and for a three year period following acceptance of the project by WSDOT.
6. Approval of the local agency certification by the Assistant Secretary for TransAid may be rescinded at any time upon local agency request or if, in the opinion of the Assistant Secretary for TransAid, it is necessary to do so. The rescission may be applied to all or part of the programs or projects approved in the local agency certification.

_____ _____

Mayor or Chairman **Date**

WASHINGTON STATE DEPARTMENT OF TRANSPORTATION

Approved By: _____ _____

Assistant Secretary for TransAid **Date**

12:P:LAG1a

Certification Acceptance Interview Form

Agency: _____ **Date:** _____

Interview Conducted By:

_____
_____
_____
_____

Agency Representatives:

_____
_____
_____
_____

Table of Organization: (Get copy from agency and review duties, requirements, and personnel currently filling.)

Position Responsible for the Following Functions

Six-Year Transportation Improvement Program: _____
Selection of Annual Program: _____
Location/Design Approval: _____
PS&E Approval: _____
Tied Bids: _____
Approval of Materials Sources: _____
Construction Administration: _____
Construction Inspection: _____
Acceptance Sampling/Test: _____
Independent Assurance Sampling/Test: _____
Change Orders: _____
Project Files: _____
EEO Interviews/Monitoring: _____
Training Goal Attainment: _____
DBE Compliance/Monitoring: _____

Consultants

For what areas does the agency expect to use consultants?

_____ Environmental
_____ Design
_____ PS&E Preparation
_____ Right-of-Way Appraisal
_____ Right-of-Way Negotiation
_____ Right-of-Way Relocation
_____ Construction Administration
_____ Construction Inspection
_____ Surveying
_____ Sampling and Testing

Does local agency have written procedures for the selection of consultants? Yes _____ No _____

Comments: _____

_____

If consultants are used, how will agency monitor and control the consultant's work? _____

_____
_____
_____
_____

Remind agency that they will be in control of the consultant's work and that EEO, DBE, and training should be done by agency.

Right-of-Way

Does the agency have procedures approved by WSDOT for:

Right-of-Way Acquisitions	Yes _____	No _____
Relocation	Yes _____	No _____

Procedures for Ad, Award, and Execution of Contract

Position Responsible for:

Approval to Advertise	_____
Prequalification of Bidders	_____
Award of Contract	_____
Execution of Contract	_____
Name of Legal Publication	_____

General Questions About Administration

Who decides on and approves deviations from design prior to submittal to the state for formal approval?

_____

Describe ledger system: _____

_____

_____

_____

_____

Who will check payrolls, etc.? _____

Describe change order approval process: _____

_____

_____

_____

Describe materials testing and approval process: _____

_____

_____

_____

_____

Describe agency requirements for project diary and inspectors daily report keeping: _____

_____

_____

_____

Describe agency process for approval of subcontractors: _____

_____

_____

_____

How will agency handle administration of more than one contract at the same time? _____

_____

_____

_____

How will agency handle inspection of several phases of project at same time (e.g., dirt work, electrical, paving, structure)?

_____

_____

_____

How will agency respond if project engineer and/or inspector are unable to be on job site due to illness, etc.? Who will handle control of project if needed person cannot be there? _____

_____

_____

_____

How does agency manage traffic control? _____

_____

_____

_____

Are there written procedures for preconstruction conferences? _____

_____

_____

_____

Does Agency Have These Necessary Manuals

Local Agency Guidelines	Yes _____	No _____
AASHTO — Policy on Geometric Design of Highways and Streets	Yes _____	No _____
WSDOT Construction Manual	Yes _____	No _____
WSDOT/APWA Standard Specifications	Yes _____	No _____
APWA Amendments	Yes _____	No _____
WSDOT Amendments and Standard Specifications	Yes _____	No _____
Standard Item Table	Yes _____	No _____
MUTCD	Yes _____	No _____
WSDOT Design Manual	Yes _____	No _____
WSDOT Standard Plans for Road and Bridge Construction	Yes _____	No _____
WSDOT Utility Manual	Yes _____	No _____
WSDOT Right-of-Way Manual (2 volumes)	Yes _____	No _____
SWIBS Manual	Yes _____	No _____
Hydraulics Manual	Yes _____	No _____

Upcoming Federal Aid Projects	Scheduled to Begin
_____	_____
_____	_____
_____	_____
_____	_____

Summary

Action to be taken by agency in following areas: _____

_____

_____

_____

_____

_____

_____

Comments From Reviewers

_____

_____

_____

_____

_____

_____

Recommendation of Review

_____ Full administration by agency of all projects
_____ Administration by agency on a project-by-project basis
_____ Administration by agency for projects up to $_____
_____ Deny approval for certification acceptance
_____ Remove from certification acceptance status

Concurrence by Assistant Secretary for TransAid

_____ _____

Assistant Secretary for TransAid Date

13:P:LAG1a

14.1 General Discussion

The previous three parts of this manual explained how local agencies may qualify to receive Federal Highway Administration (FHWA) funding for their transportation projects. The remainder of the manual explains procedures for developing specific projects.

Once a local agency has qualified to receive FHWA funds, as described in Chapter 12, the next action is to apply for funds to develop specific projects in its transportation program. Depending on their size and complexity, different projects may require different development procedures. The remaining parts of the manual are arranged to reflect these differences.

The next part, "General Project Development," Chapters 21-27, describe activities required during preliminary engineering on all projects.

The part entitled "Special Project Development Processes," Chapters 31-34, describes activities that may be required on some projects.

The parts entitled "Design" and "Construction and Post Construction," Chapters 41-46 and 51-53, offer the local agency a choice of procedures, depending on whether its projects are located in urban or rural areas and whether it or the state will administer its construction contracts.

The part entitled "Miscellaneous," Chapters 61-65, describe the activities that are required on projects with an agency's own forces, for work on transportation enhancements, or work on the National Highway System (NHS).

The specific requirements for a project may change as project development progresses and as more information about a project becomes available. Further details of the specific requirements are shown in the Project Development Process Flow Chart and Checklist. The meanings of unfamiliar terms may be found in the Glossary. Once the local agency has identified the steps required on a particular project, only the parts in the manual that deal specifically with those steps need be referred to.

14.2 Project Development Process Overview

This section describes the project development process by setting forth project phases, documentation requirements, options for construction administration, and required reviews and approvals.

.21 Phases of Authorization. FHWA funds may be authorized for the following project phases:

a. Planning (STP and CM/AQ funds only).

b. Preliminary engineering.

c. Right-of-way acquisition.

d. Construction.

Requests for preliminary engineering funds generally should be made in advance of the right-of-way acquisition, environmental studies, or public hearings to receive proper reimbursement for the costs.

Construction funds may be requested with preliminary engineering funds when a project does not require any of the items mentioned in the previous paragraph and meets one of the following criteria:

a. The local agency plans to start construction at an early date (within one year of fund authorization).

b. The project is of minor magnitude, such as a safety improvement or a bridge replacement.

.22 Documentation Required for Authorization of Funds.

a. Planning With STP Funds. "Urban Transportation Planning" is an interdisciplinary process for developing and monitoring long- and short-range transportation plans and improvement programs. These plans and programs are formulated with due consideration of present and anticipated future social, economic, and environmental factors and the safety and mobility needs of the population of the urban area. It is a dynamic process, in that it is continuously monitored to accommodate changes of land use, economic conditions and other factors influencing travel patterns. Because of the vast amount of capital expenditures required in the implementation of transportation systems (both highway and transit related), these projects could radically influence land use development in an area or region. Due to the substantial influences that transportation improvements have on the character of the land, it is important that transportation improvements reflect of the overall regional social and economic objectives pertaining to community development.

FHWA funded planning activities and studies are identified in Title 23, Part 420 USC, as activities not included in a work program but necessary in development of procedures and project identification.

For planning and Transportation Demand Management (TDM) funding, the following documents are required:

1. Project prospectus for planning projects (Chapter 21).

2. Planning and TDM Agreement.

3. Evidence of TIP/STIP.

Planning and TDM projects should be submitted through Regional TransAid Office.

b. Preliminary Engineering Funds. When applying for preliminary engineering funds only, the following documents are required:

1. Project Prospectus (Chapter 21).
2. Local Agency Agreement (Chapter 22).
3. Design typical sections lobbying certificate, vicinity map, and evidence TIP/STIP.

c. Right-of-Way Funds. When applying for right-of-way funds, after preliminary engineering funds have developed right-of-way plans, the following documents are required, if appropriate:

1. Supplement to original Local Agency Agreement (Chapter 22).
2. Final FHWA approval of environmental documents (Chapter 24).
3. Letter certifying that public-hearing requirements have been met and the design approval granted and/or appropriate documentation in the file (refer to Section 24.38 for details).
4. Relocation plan (Chapter 25).
5. Right-of-way plan (Chapter 25).
6. Right-of-way Project Funding Estimate or True-Cost estimate (Chapter 25).

d. Construction Funds. After acquiring right-of-way, the following documents must be submitted to request construction funds:

1. Supplement to Local Agency Agreement.
2. Right-of-way certification.
3. Relocation certification.
4. FHWA requirement checklist.

e. Combined Preliminary Engineering and Construction Funds. When applying for preliminary engineering and construction funds simultaneously, the following documents are required:

1. Project Prospectus.
2. Local Agency Agreement.
3. Determination that the project is categorically excluded from environmental documentation requirements.
4. Relocation plan, (if required) right-of-way certification, and FHWA checklist.
5. Items listed in Section 14.22a.

.23 Construction Contract Administration. The local agency has the option of:

a. Administering the contract if it has approved certification acceptance procedures and operates in compliance with Chapter 13.

b. Requesting that WSDOT administer the contract.

c. Using its own forces to perform the work if operating under Certification Acceptance (CA) (Chapter 61).

d. Requesting that another public agency (one operating under CA) perform the work (Chapter 13).

e. Performing contract administration by a consultant (Chapter 31 under CA).

f. Referring to Chapter 62 for administering enhancement projects.

.24 Reviews and Approvals. The chart below shows required approvals for NHS and non-NHS projects using local CA or non-CA agencies. These actions apply to the NHS and non-NHS, regardless of project funding source. New/reconstruction (N/R) includes HOV, park and ride, and PCC pavement rehabilitation projects.

	Action	Local non-NHS	Local non-CA non-NHS	LA NHS
a.	PE Fund Auth. and Modif./Supp.	F	F	F
b.	Exceptions to Design Stan.	S	S	S
c.	Design App. (inc. prelim. and adv. detail br. plan app.	L	S	S
d.	Experimental Work Plans	F	F	F
e.	PS&E Approval	L	S	S
f.	State furnished mat., cost-effective determination	L	S	S
g.	Prop item, pub. int. find.	L	S	S
h.	Concurrence in Award	L	S	S
i.	Buy America Exemption	F	F	F
j.	Tied Bids	L	L	L
k.	State Forces Work	S	S	S

F = FHWA
S = State
L = Local CA Agency

When the local agency is the approving authority for any phase of work, it must operate within the *Local Agency Guidelines* and all applicable federal, state, and local laws and regulations. As outlined in Chapter 13, WSDOT will monitor the agency's procedures. WSDOT or another CA agency is the approval authority when the local agency is not certified.

14.3 Standards

Non-NHS standards are addressed in Chapters 42 and 62.

For NHS routes, AASHTO design standards, approved by the FHWA Headquarters Office, will apply to all new construction and reconstruction projects; and to all resurfacing, restoration, and rehabilitation (3-R) multilane limited access highway projects on the NHS. State design standards approved by the FHWA Division Office, Section 430 WSDOT *Design Manual* (M 22-01), will apply to all other NHS highways. These standards apply to all NHS projects regardless of funding sources. FHWA approval is required for all standard plans, amendments, and general special provisions intended for use on FHWA construction projects on the NHS.

14.4 Project Development Process Flow Chart and Checklist

The flow chart (see Appendix 14.51) and checklist (see Appendix 14.52) depict the sequence of major activities necessary to develop transportation projects using FHWA funds. The forms required for a project are shown on the list of forms. Since the type of work varies on projects, see the WSDOT *Construction Manual*, Chapter 11, "Forms," for additional required forms.

It is recommended that a copy of the checklist be inserted in the project file and used to initiate and document the activities necessary to complete a project.

14.5 Appendixes

14.51 Project Development Process Flow Chart

14.52 Project Development Checklist

14:P:LAG1a

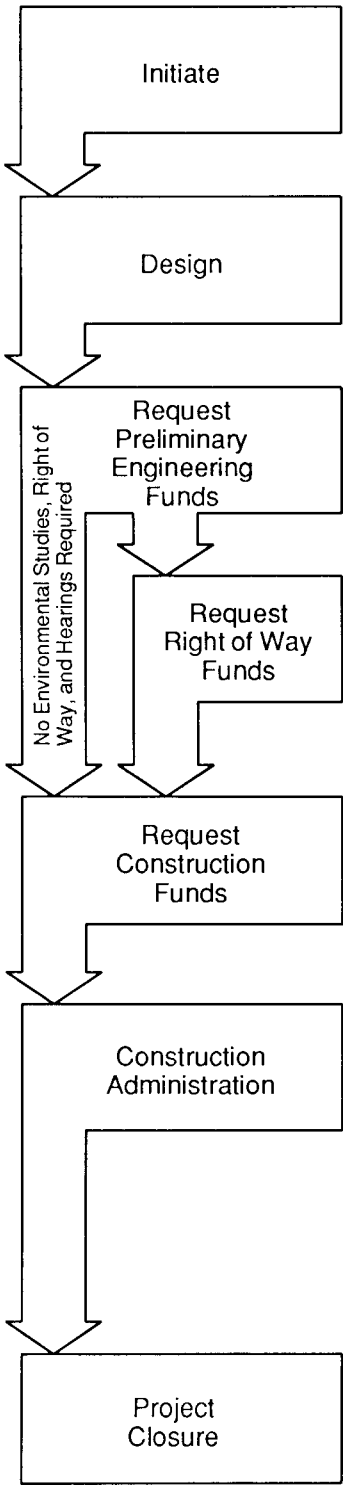

	Process Activities	Chapter Reference
00	Project Development Checklist	12 & 14
00	Included in Agency TIP/STIP	
	or	
00	From Priority Array of TransAid Engineer or Bridge Committee	34
00	Project Development Checklist	
00	Prepare Project Prospectus-Design Report	21 & 43
00	If Applicable, Engage Consultant	31
00	Make Environmental Determination	24
00	If Applicable, Request Design Deviation	41
00	Project Development Checklist	
00	Project Prospectus	21
00	Local Agency Agreement	22
00	If Applicable, Request Design Deviation	41
00	Project Development Checklist	
00	Location/Design, Public Hearing, and Approval	43
00	Complete Environmental Action	24
00	Develop Right-of-Way Plans and Estimate	25
00	Complete Relocation Plan	25
00	Supplement to Local Agency Agreement	22
00	Project Development Checklist	
00	Relocation and Right-of-Way Certification and Project Analysis	25
00	DBE Goals Set	26
00	PS&E Approval	44
00	Supplement to Local Agency Agreement	22
00	For State Ad and Award, Financial Responsibility Letter	App. 44.64
00	Project Development Checklist	
00	Contract Number From Regional TransAid Engineer	App. 46.14
00	Notice to Minority Contractors Association (see Regional TransAid for Distribution Centers)	26
00	Advertise for Bids	46
00	For Certified Agency (CA), Approve Award and Notify Regional TransAid Engineer	46
00	For WSDOT Administered Contracts, Award by WSDOT	45
00	Award Data to Regional TransAid Engineer	46
00	Preconstruction Conference	52
00	Construction Administration (WSDOT *Construction Manual*)	52
00	Project Development Checklist	
00	Construction Completion Notice to Regional TransAid Engineer	53
00	Final Acceptance by FHWA	53
00	Final Billing and Cost Report to Regional TransAid Engineer	23 & 53
00	Complete DBE Form	26
00	Final Records	53
00	Audit	53

15:P:LAG1a

Project Title: _____

Project Location: _____

Road or Street Number: _____ FA Program: _____

Project Initiation

Initials	Date or N/A	
_____	_____	Project on TIP/STIP
_____	_____	Federal aid program form (Sheet 1 of Prospectus) to:
		_____ Metropolitan planning organization
		_____ Or WSDOT (Regional TransAid)
_____	_____	Program of project approved by appropriate agency

Project Prospectus

_____	_____	Sheet 1
		_____ Project information, local agency project number
		_____ Description of proposed work and existing facility
		_____ Math check on estimate of all phases
		_____ Proposed obligation date
		_____ Environmental determination
		_____ Signature block
_____	_____	Sheet 2
		_____ Geometric design data
		_____ Accident data
		_____ Environmental considerations
		_____ Right-of-way and relocation
		_____ Water area involvement
_____	_____	Sheet 3
		_____ Utility relocations
		_____ FAA Involvement
		_____ Signature
		_____ 3-R safety checklist, typical roadway, vicinity map
_____	_____	Project application checklist

Local Agency Agreement

_____	_____	Billing address
		_____ Description of work matches prospectus
		_____ Construction engineering within allowable limits
		_____ Check math on agreement

Local Agency Agreement
(Continued)

Initials	Date or N/A	
		_____ Federal aid matching percentage
		_____ Method of financing
		_____ Agreement signed by approving authority

Request Preliminary Engineering Funds

_____	_____	Project programmed
_____	_____	Project application package to Regional TransAid Engineer:
		_____ Project prospectus with attachments
		_____ Local Agency Agreement
		_____ Project application checklist completed
		_____ Lobbying certificate
_____	_____	PE funds authorized by Assistant Secretary for TransAid

Consultant Selection Process

_____	_____	Independent estimate for consultant services and recommendation (request) to approving authority
_____	_____	Receive approval to advertise for consultant services
_____	_____	Advertise for consultant services
_____	_____	Develop consultant evaluation selection criteria
_____	_____	Select minimum of three best qualified firms
_____	_____	Submit request for approval of selected firm to approving authority
_____	_____	Conduct preaward audit (if necessary) before negotiations
_____	_____	Approving authority approves selection, negotiation begins
_____	_____	Negotiation completed — submit final draft of agreement, etc., to the approving authority
_____	_____	Receive approval from approving authority
_____	_____	Agreement signed by consultant
_____	_____	Agreement executed by approving authority (consultant may now begin work)
_____	_____	Notice to proceed sent to the consultant
_____	_____	Send copy of agreement to Regional TransAid Engineer

Consultant Administration

_____	_____	Oversee the consultant's work and billings to ensure compliance with the agreement
_____	_____	Prepare diary to record discussions and visitation with the consultant
_____	_____	Check consultant billings regarding employee classification, wage rate, actual invoices for direct non salary costs, etc.
_____	_____	Enter consultant payment on ledger system
_____	_____	Conduct consultant employee interviews

Environmental Processes

Initials	Date or N/A	
_____	_____	Categorical exclusion approved by FHWA
_____	_____	Prepare SEPA checklist for local environmental assessment
_____	_____	Submit draft environmental assessment to Assistant Secretary for TransAid — include dual units (if metric units are used).
_____	_____	Revise draft environmental assessment
_____	_____	Approve draft environmental assessment
_____	_____	Publish environmental assessment notice
_____	_____	Publish opportunity for public hearing
_____	_____	Submit revised environmental assessment and legal notice to Assistant Secretary for TransAid
_____	_____	Finding of no significant impact by FHWA
		-or-
_____	_____	Establish requirement for Environmental Impact Statement

Environmental Impact Statement

_____	_____	Publish notice of intent
_____	_____	Submit interdisciplinary team recommendations to project manager
_____	_____	Develop public involvement plan
_____	_____	Develop data inventory and evaluation from interdiscipinary team
_____	_____	Project manager reviews preliminary discipline reports
_____	_____	Submit preliminary Draft Environmental Impact Statement to Assistant Secretary for TransAid
_____	_____	Receive Washington State Department of Transportation comments on above
_____	_____	Submit camera-ready Draft Environmental Impact Statement to Regional TransAid Engineer for signature
_____	_____	Receive approval to print Draft Environmental Impact Statement
_____	_____	Submit circulation copies to Regional TransAid Engineer
_____	_____	Publish in Federal Register (minimum 45 days comment period)
_____	_____	For state route, obtain Washington State Department of Transportation approval before advertising for public hearing
_____	_____	Advertise opportunity for public hearing
_____	_____	Submit preliminary Final Environmental Impact Statement and draft record of decision to Regional TransAid Engineer
_____	_____	Receive comments from Assistant Secretary for TransAid
_____	_____	Receive approval to print Final Environmental Impact Statement
_____	_____	Submit final Environmental Impact Statement to Regional TransAid Engineer
_____	_____	Receive FHWA approval
_____	_____	Circulate final Environmental Impact Statement
_____	_____	Final record of decision approved by FHWA

Location and Design Approval

Initials	Date or N/A	
_____	_____	Submit project prospectus
_____	_____	Submit design report
_____	_____	Submit pavement design criteria
_____	_____	Meet public hearing requirements
_____	_____	Meet environmental requirements
_____	_____	For major bridge project, submit type, size, and location study to Regional TransAid Engineer
_____	_____	Obtain FHWA approval of the type, size, and location study
_____	_____	For traffic signal projects, submit warrants for signalization to Regional TransAid Engineer
_____	_____	Obtain location and design approval
_____	_____	Publish design approval notice

Right-of-Way Funding and Acquisition

Funding

_____	_____	Complete design hearing requirements
_____	_____	Approve right-of-way plan, with dual units (if metric units are used)
_____	_____	Submit right-of-way relocation plan (if required) to Regional TransAid Engineer
_____	_____	Submit right-of-way acquisition plan, right-of-way project funding estimate or true cost estimate, supplement to Local Agency Agreement, FHWA approval of environmental documents, and certification that public hearing requirements have been met to Regional TransAid Engineer with request for right-of-way funds
_____	_____	Receive authorization to acquire R/W from Assistant Secretary for TransAid

Acquisition

_____	_____	Acquisition procedures approved by Assistant Secretary for TransAid
_____	_____	Set up documentation file for each parcel
_____	_____	Set up commitment file
		Appraisal:
_____	_____	Appraiser meets WSDOT criteria
_____	_____	Give landowner opportunity to accompany appraiser
_____	_____	Signed appraiser certification in file
		Appraisal Review:
_____	_____	Appraisal reviewer meets WSDOT criteria
_____	_____	Date of value determination precedes commencement of negotiations
_____	_____	Just compensation set by agency
_____	_____	Signed review appraiser certification in file

Right-of-Way Funding and Acquisition

Acquisition
(Continued)

Initials	Date or N/A	
		Negotiations:
_____	_____	Ensure that private firms negotiators are licensed and have a licensed broker
_____	_____	Prepare diary of all owner contacts
_____	_____	Make appointment with property owner
_____	_____	Give owner written statement of just compensation
_____	_____	Ensure that settlement contains construction clauses
_____	_____	Obtain evidence of clear title
_____	_____	Specify salvage
		Relocation Plan:
_____	_____	Approved by WSDOT
_____	_____	Furnished plan to person scheduled to be displaced
_____	_____	Send written notice to vacate
_____	_____	Pay last resort housing costs
_____	_____	Check for filed appeal against local agency offer
_____	_____	Complete relocation
_____	_____	Complete acquisition
_____	_____	Complete administrative settlement documentation
_____	_____	Place a copy of deeds in file
_____	_____	Send:
		_____ Letter of certification
		_____ LPA coordinator conducts certification review
		_____ WSDOT's certification by Regional TransAid Engineer

Plans, Specifications, and Estimates

_____	_____	Review commitment and correspondence file
		When applicable, secure the following permits or interagency coordination:
		_____ Airport roadway clearance from FAA
		_____ Coastal zone management compliance from DOE
		_____ For cultural, archeological, or historic sites SHPO contacted
		_____ Plant or animal endangered species from USFWS/NMFS
		_____ When waters modified or controlled, USFWS and State Department of Fisheries and Wildlife consulted
		_____ When stream is affected, permit from DOE
		_____ For timber supporting land, permit from DNR

Plans, Specifications, and Estimates

(Continued)

Initials	Date or N/A		
		_____	When construction might reduce water quality, contact DOE
		_____	For quarries of 0.81 ha (2 acres) and 9 091 metric tons (10,000 tons) or more DNR contacted
		_____	Waters/wetlands — Army Corps of Engineers contacted
		_____	For navigable waterways, permit from Coast Guard obtained
		_____	If wetlands are affected, U.S. Fish and Wildlife Service or National Marine Fisheries Services contacted
		_____	Utility agreement obtained
		_____	Railway agreement(s) obtained
_____	_____	PS&E completed:	
		_____	Vicinity map
		_____	Summary of quantities
		_____	Pit, quarry, stockpile, and waste sites
		_____	Reclamation plans
		_____	Roadway sections
		_____	Plans/profiles
		_____	Utility
		_____	Structure notes
		_____	Signing
		_____	Illumination
		_____	Bridge plans
		_____	Traffic control
		_____	Standard plans
		_____	Sheets numbered and dated
		_____	Each sheet signed and stamped by Professional Engineer
		_____	Bridge plans, design calculations, and soil report to Regional TransAid Engineer (State Ad and Award only)
		_____	Form FHWA-1273 and latest amendment included
		_____	Log of test borings
		_____	Training requirements
		_____	EEO requirement clauses
		_____	For steel, included Buy America requirement
		_____	Traffic control special provisions
		_____	Specialty items
		_____	General special provisions and amendments arranged in order and indexed
		_____	Project proposal
		_____	Federal Aid Proposal Notices (2 pages)
		_____	Noncollusion Declaration
		_____	Contract
		_____	Certification for Federal Aid Contracts (Lobbying)
		_____	DBE Utilization Certification
		_____	Engineer's estimate complete
		_____	PS&E includes dual metric units if adv. prior to October 2000. Only metric units if adv. after 10-1-00.

Plans, Specifications, and Estimates

(Continued)

Initials	Date or N/A	
		_____ Documentation for each item in engineer's estimate
		_____ Justification for nonparticipating items
		_____ Detailed documentation for lump sum items available in project files
		_____ Estimate to Regional TransAid Engineer
		_____ Training goal set by Assistant Secretary for TransAid
		_____ DBE goal set by Assistant Secretary for TransAid
		_____ Approval of local agency supplied materials
		_____ Sources approved by approving authority
		_____ Approval of stockpiling by Assistant Secretary for TransAid (when payment is requested for material when stockpiling aggregates, etc., for use on a future federal aid project)
		_____ Distribution of preliminary plans as determined by local agency
_____	_____	Field review of PS&E (State Ad and Award only)
_____	_____	For tied bids, letter from approving authority
_____	_____	For State Ad and Award, financial responsibility letter with PS&E documents sent to Regional TransAid Engineer
_____	_____	PS&E approved by approving authority
_____	_____	Plans, contract specifications and estimate stamped, signed, and dated, and on file in the local agency office
_____	_____	State and federal wage rates added to ad plans
_____	_____	PS&E sent to Regional TransAid Engineer

Request Construction Funds

_____	_____	Send letter with the following attachments to Regional TransAid Engineer requesting construction funds:
		_____ Supplement to Local Agency Agreement, if project includes other phases
		_____ Letter of right-of-way certification
		_____ Right-of-way project analysis

Local Ad and Award

Advertise for Bids

_____	_____	Get TransAid Contract Number _____ from Regional TransAid Engineer
_____	_____	Approve ad period of less than 3 weeks
_____	_____	Publish notice of bid opening
_____	_____	Date of publication for sealed bids

Local Ad and Award

Bid Opening

Initials	Date or N/A	
_____	_____	Issued addendum (if within one week of bid opening, bid opening should be delayed)
_____	_____	Opened Bids
_____	_____	Prepared bid tabulation sheet
_____	_____	Checked submitted bids for tabulation errors
_____	_____	Completed bid and bidders tabulation sheet
_____	_____	Checked DBE participation project goals — verify DBE certification status
_____	_____	Determine responsive bid
_____	_____	Determine contractor qualifications
_____	_____	Contractor registered by Washington State Department of Labor and Industries
_____	_____	Contractor licensed as required by the laws of the state of Washington
_____	_____	Award recommendation sent to approving authority
_____	_____	When low bid is over engineer's estimate, submit justification and letter of award recommendation to approving authority
_____	_____	Submit supplement to Local Agency Agreement
_____	_____	Supplement approved by Assistant Secretary for TransAid

Award of Contract

_____	_____	Establish contract award date _____
_____	_____	Sent "Award Letter" to successful low bidder
_____	_____	Sent "Condition of Award" to successful low bidder if DBE goals are set in the contract
_____	_____	Sent notice of award to Department of Labor and Industries
_____	_____	Notify all unsuccessful bidders
_____	_____	Return bid bonds (except for first three)
_____	_____	Notify second and third bidders of holding bid bonds until execution
_____	_____	Sent to Regional TransAid Engineer:

_____ Tabulation of bids
_____ Engineer's estimate
_____ Actual versus estimated costs shown in Local Agency Agreement
_____ Award letter
_____ DBE utilization certification
_____ Estimated date of contract completion

DATE OF AWARD IS CUTOFF FOR CHARGING TO PRELIMINARY ENGINEERING

Construction Administration

Execution of Contract

Initials	Date or N/A	
_____	_____	Sent contract and contract bond papers to contractor for signature
_____	_____	"Certificate of Insurance" received from contractor
_____	_____	Approving authority executed contract documents
_____	_____	Notified the contractor by phone of the execution of the contract
_____	_____	Executed a copy of the contract to contractor
_____	_____	Sent notice to proceed to contractor, with cc to Regional TransAid Engineer
_____	_____	Returned bid bonds to second and third bidders

Preconstruction Conference

_____	_____	Notice of preconstruction conference to:
		_____ Contractor
		_____ Regional TransAid Engineer
		_____ Affected utility companies
		_____ Police department
		_____ Fire department
		_____ Hospital
		_____ Ambulance service
		_____ Post Office
		_____ Others _____
		_____ _____
		_____ _____
_____	_____	Preconstruction conference agenda prepared
_____	_____	Preconstruction conference held
		Minutes of meeting to:
		_____ Contractor
		_____ Subcontractors
		_____ Regional TransAid Engineer
		_____ Other attending persons
		_____ Invited but not represented agencies
		_____ Project file
_____	_____	"Training Program":
		_____ Received from contractor
		_____ Approved by agency
_____	_____	"Apprentice/Trainee":
		_____ Approval request from contractor
		_____ Approved by agency

Construction Administration

Construction Documentation

Initials	Date or N/A	
_____	_____	"Record of Material Testing" received from WSDOT Materials Laboratory
_____	_____	Contractor provides copies of permits obtained from other agencies and/or property owners:
		_____ Washington State Dept. of Wildlife/Fisheries-Hydraulic Permit
		_____ Washington State Dept. of Ecology
		_____ Irrigation Regionals
		_____ Burlington Northern Railroad
		_____ Union Pacific Railroad
		_____ Air Pollution Control Authority
		_____ _____
		_____ _____
		_____ _____
_____	_____	Temporary water pollution control plan approved
_____	_____	Approved contractor's progress schedule
_____	_____	Received railroad insurance from contractor
_____	_____	Construction diary started
_____	_____	Inspector's diary started
_____	_____	"Certification of Materials Origin" received from contractor
_____	_____	Material source approval received
_____	_____	Plans for falsework and forms:
		_____ Received from contractor
		_____ Approved by agency
_____	_____	Required job site posters placed by contractor
		_____ FHWA 1495 and 1495A — "Wage Rate Information"
		_____ FHWA 1022 — "Fraud Notice Poster"
		_____ OFCCP-1420 — "EEO is the Law"
		_____ WISHA LI-416-81 — "Safety and Health Protection on the Job"
		_____ Industrial insurance poster — LI-242-91
		_____ Your rights as a worker — F700-053-000
		_____ Family care and maternity — F700-025-000
		_____ Approved "Statement of Intent to Pay Prevailing Wage"
		_____ Copy of wage rates from contract documents
_____	_____	Daily construction signing records started (Checked twice daily and recorded)
_____	_____	Weekly statement of working days started
_____	_____	Material acceptance sampler appointed
_____	_____	Material independent assurance sampler appointed
_____	_____	Appointed office engineer for progress estimates and final records
_____	_____	Obtain a copy of the scale certifications

Construction Administration

Construction Documentation
(Continued)

Initials	Date or N/A	
_____	_____	Daily scale check
_____	_____	Received FHWA Form 1391 for each July from contractor and subcontractors
_____	_____	FHWA Form 1392 prepared and sent to Regional TransAid
_____	_____	Received "Request to Sublet Work" and "Subcontractor or Agent Certification" from contractor
_____	_____	Approved request to sublet (subject to 70 percent limit)
_____	_____	Received "Intent to Pay Prevailing Wages" from contractor, subcontractors, and agents
_____	_____	Received approved "Intent to Pay Prevailing Wages" from Labor and Industries (required before first payment)
_____	_____	Checked first certified payroll from contractor and subcontractors to ensure payment of prevailing wages
_____	_____	Conducted random check of each successive payroll
_____	_____	Monthly wage rate interviews conducted
_____	_____	Checked employee interview wage rate against certified payroll and Labor and Industries approved prevailing rate
_____	_____	Assigned Change Order Numbers _____
		(FHWA approval required when change order will alter the termini, character, or scope of work. Approval must be obtained before effective date of change order to be eligible for federal participation.)
		_____ Prepare change order that details basis and need for the change
		_____ Extension of time approved _____ days
		_____ Change order signed by contractor
		_____ Change order signed by surety (if required)
		_____ Verbal approval obtained from approving authority
		_____ Signed by approving authority
		_____ Original sent to contractor
		_____ Copy of approved change order sent to Regional TransAid Engineer
		_____ Supplement to Local Agency Agreement approved by Assistant Secretary for TransAid
_____	_____	Obtained copy of monthly estimate
		_____ Verified and documented that DBE is performing a commercially useful function prior to making a monthly payment
		_____ Prepared estimate
		_____ Checked estimate
		_____ Estimate sent to contractor
		_____ Estimate received from contractor
		_____ Obtain all "Intent to Pay Prevailing Wages" forms (for first month only; no payment can be made to the contractor until the form is received)

Construction Administration

Construction Documentation
(Continued)

Initials	Date or N/A	
_____	_____	Overview of DBE Work:
		_____ Verify work being done per Condition of Award Letter
		_____ Conduct on-site review(s) of each DBE to determine if the DBE is performing a commercially useful function (CUF)
		_____ Review change orders that affected DBE work
		_____ DBE goal change approved by Assistant Secretary for TransAid
_____	_____	Overview of EEO:
		_____ Agency designates an EEO officer
		_____ Conduct on-site compliance review
		_____ Monitor CC-257 forms each month for each trade
		_____ Notify contractor of compliance or non-compliance with the contract provisions
		_____ Ensure EEO signs are posted

Project Completion

_____	_____	Prefinal inspection by local agency and contractor completed
_____	_____	Final inspection by local construction agency and contractor completed
_____	_____	Report of Non-American Made Material (Stand. Specs. 1-06.5) received from contractor
_____	_____	Notice of completion sent to contractor
_____	_____	Extension of time request with justification received from contractor
_____	_____	Extension of time granted, _____ days
_____	_____	Extension of time refused, _____ days _____ liquidated damages
_____	_____	Letter sent notifying contractor of assessed liquidated damages
_____	_____	Copy of completion notice requesting inspection and acceptance by WSDOT and FHWA sent to Assistant Secretary for TransAid
_____	_____	Contractor submitted claim
		_____ No claim submitted
_____	_____	Notice of completion to:
		_____ Department of Labor and Industries
		_____ Department of Revenue
_____	_____	FHWA Form 47 required for projects on NHS routes over $1 million _____ Yes _____ No
		_____ Received from contractor
_____	_____	Received “Affidavit of Wages Paid” from contractor and subcontractors

Project Completion

(Continued)

Initials	Date or N/A	
_____	_____	Received "Affidavit of Amounts Paid to DBE Participants" from contractor
_____	_____	Release received from Department of Labor and Industries
_____	_____	Release received from Department of Revenue
_____	_____	Comparison of preliminary and final quantities sent to approving authority
_____	_____	Material certification form sent to approving authority
_____	_____	Completed "Report of Contractor's Performance" for prime contractor
_____	_____	As built plan completed (to be retained indefinitely)
_____	_____	Final record book #1 completed
_____	_____	Final estimate approved by the approving authority
_____	_____	Final estimate received from contractor
_____	_____	Paid final estimate
_____	_____	Released retained percentage from escrow or mailed check to contractor

Project Closure

_____	_____	Completion letter sent to Regional TransAid Engineer (within 15 days after project is completed)
_____	_____	Final billing sent to Regional TransAid Engineer (within 90 days after completion)
_____	_____	Completed final field inspection by the Regional TransAid Engineer. Deficiencies (if any) will be noted on DOT Form 140-500.
_____	_____	Resolve deficiencies found during the above field inspection
_____	_____	Informed by Regional TransAid Engineer of WSDOT final billing approval

16:P:LAG1a

Contents

GUIDELINE SECTIONS

Guidelines Overview

- 11 Introduction
- 12 FHWA Funding Programs
- 13 Becoming Certified to Administer FHWA Projects
- 14 Developing Projects Using the Local Agency Guidelines

General Project Development
(Applicable to All Projects)

- 21 The Project Prospectus
- 22 The Local Agency Agreement
- 23 Progress Billings
- 24 Environmental Processes
- 25 Right-of-Way Procedures
- 26 Disadvantaged Business Enterprises
- 27 Equal Employment Opportunity and Training

Special Project Development
(Applicable to Some Projects)

- 31 Using Consultants
- 32 Railroad/Highway Crossing Program
- 33 Emergency Relief Program
- 34 Bridge Selection and Scoping

Design

- 41 General
- 42 Design Standards
- 43 Location and Design Approval
- 44 Plans, Specifications, and Estimates
- 45 State Advertising and Award Procedures
- 46 Local Advertising and Award Procedures

Construction and Post-Construction

- 51 WSDOT Administered Projects
- 52 Local Administered Projects
- 53 Project Closure

Miscellaneous

- 61 Local Agency Force Projects
- 62 Enhancement Projects
- 63 NHS Projects
- 64 Bridge Inspections
- 65 Management Systems

List of Forms

Acronyms/Glossary of Terms

Index

21.1 General Discussion

The Project Prospectus is the description of the proposed improvement which serves as the support document for Federal Highway Administration (FHWA) authorization of federal funds. The project prospectus may serve as the design report for those projects that are categorically excluded. The prospectus also provides a schedule which tells state and FHWA programmers when the local agency anticipates obligating federal funds.

The Project Prospectus is one of the main items contained in the project application package discussed in this chapter. Other items in this package include the Local Agency Agreement (see Chapter 22) and the items of supporting data listed in the Project Application Checklist (Appendix 21.41).

21.2 Procedure for Submitting the Planning/TDM Application Package

Planning and transportation demand management (TDM) projects funded with STP and CM/AQ funds will be administered by TransAid. These projects will require the Planning/ TDM Prospectus and Agreement.

An original Planning/TDM Agreement signed by the approving authority must be submitted by the local agency to the Regional TransAid Engineer. This agreement form will be retained by WSDOT. It is the responsibility of the local agency to submit an additional agreement form or a copy if they need an executed agreement for their files.

Olympia Service Center TransAid will request funding from FHWA/FTA. After FHWA/ FTA authorizes and signs the PR1, Olympia Service Center TransAid will set up the work order and notify the agency to proceed.

21.3 Procedure for Compiling the Project Application Package

Local agencies must submit the following to the Regional TransAid Engineer:

- Original and one copy of the completed Project Prospectus.
- Two original Local Agency Agreements signed by the approving authority.
- Supporting data listed in the Project Application Checklist (see Appendix 21.41).
- Original and one copy of the Environmental Classification Summary Form for certain NEPA environmental actions (see Section 24.2).

A given project may not require all of the items in the checklist; however, the local agency must include all items that are relevant. Identify those items included with a check mark in the appropriate column of the checklist. Many of the items listed in the checklist take place during the course of project development and are not complete at the time the prospectus is submitted. An agency may note such items on the checklist and submit them when they are completed. The latest point at which each item may be submitted is noted in Appendix 21.42 describing the item in detail.

When completing all forms, use a typewriter or ink to ensure that reproductions are readable.

The first item in the project application package is the checklist.

The next item is the three-page Federal Aid Project Prospectus itself, which must be filled out with the current project information. Page 1 of the Federal Aid Project Prospectus is used for the FHWA federal aid programming purposes. Pages 2 and 3 of the Federal Aid Project Prospectus give the state and FHWA additional information about the proposed project, such as design and accident data, and identify other government agencies that will be involved during project development. Appendix 21.43 contains instructions for completing the prospectus. Agency codes and numbers are provided in Appendixes 21.44 through 21.46.

21.4 Appendixes

21.41 Prospectus Submittal Checklist

21.42 Instructions for Project Application Transmittal Items

21.43 Instructions for Completing Project Prospectus

21.44 List of County Code Numbers and WSDOT Region Numbers

21.45 List of City Code Numbers

21.46 List of Urban Area Numbers

Forms

DOT Form 140-101 Local Agency Federal Aid Project Prospectus

Project Prospectus Planning

DOT Form 224-080 Planning Study Agreement

2:P:LAG2

Local Agency: _____ Project Identification: _____

Use this sheet as a cover sheet to the project prospectus package. Place an "X" in the right column to denote items included. If not applicable, state N/A. Include in the cover letter a comment explaining the action taken on each item as appropriate. Note later with an "L" if the information will be supplied at a future date.

Application:

1. Project Prospectus (Chapter 21.1) ..... _____
2. Vicinity Map ..... _____
3. Typical Roadway Section ..... _____
4. Typical Bridge Section ..... _____

5a. Local Agency Agreement (Chapter 22) ..... _____

5b. Resolution No._____, Dated: _____ (if required) ..... _____

5c. TIP/STIP Inclusion (specific location, page number, chapter number, selected/limited to $) ..... _____

Supporting Data:

6. Safety Checklist — A Supplement to the Project Prospectus for 2-R and 3-R Projects (Appendix 41.71) .... _____
7. Photos of Railroad Crossing ..... _____
8. Deviation Request and Deviation Analysis Form to Justify Request (reference Appendix 41.72) ..... _____
9. Environmental Considerations (Chapter 24) ..... _____
   a. Class II Categorically Excluded (CE) ..... _____
   b. Class III Environmental Assessment (EA) ..... _____
   c. Class I Environmental Impact Statement (EIS) ..... _____
   d. SEPA Checklist ..... _____
   e. NEPA/SEPA/Section 404 Interagency Working Agreement ..... _____
10. Hearing Notices (Chapter 43) ..... _____
    a. Transcript of Hearing ..... _____
11. Location and Design Approval (Chapter 43) ..... _____
12. Right-of-Way Requirements (Chapter 25) ..... _____
    a. Relocation Plan ..... _____
    b. Right-of-Way Plans ..... _____
    c. Right-of-Way Project Funding Estimate or True Cost Estimate ..... _____
    d. Request Right-of-Way Fund Authorization ..... _____
13. Right-of-Way Certification (Chapter 25) ..... _____
14. Agreements/Easements with Railroads, Utilities, and Other Agencies (Chapter 32) ..... _____
15. FAA Notification (FAA Form 7460-1) (Chapter 24) ..... _____
16. Tied Bids (Chapter 44) ..... _____
17. Lobbying (Chapter 44) ..... _____
    a. Disclosure of Lobbying Activities ..... _____

Remarks:

3:P:LAG2

The application package shall include:

1.	**Project Prospectus**	To be included with original submittal and whenever there is a change in the scope of work or termini. For planning and TDM projects, use the Planning/TDM Prospectus Agreement.
2.	**Vicinity Map**	A vicinity map of the project with the termini clearly marked must be submitted with the Project Prospectus. The map should be 212.5 mm (8.5 inches) by 275 mm (11 inches), or multiples of, and of a scale such that a reviewer can identify the project area in the field. Show the agency name, project title, project termini, north arrow, map scale, and nearest city or distance to the nearest city/town.
3.	**Typical Roadway Section**	Attach a sketch of the proposed roadway section showing all data pertaining to the section, including side slopes and limits of right-of-way. Also indicate stationing and note any variations of the section throughout the stationing. If the design does not conform to the design standards (see Section 41.6), a request for deviation from these standards with complete justification is required.
4.	**Typical Bridge Section (If Necessary)**	Attach a sketch of the proposed bridge section showing all dimensions and type of construction and SWIBS #. On bridge projects where approaches are to be included in the contract, include roadway section and length of the approaches. In cases where the structure consists of a main span and approach spans, the length of the approach spans should be indicated, if known.
5.	**Local Agency Agreement**	This agreement is necessary on all projects involving federal funds and/or when state forces will be involved in the processing of projects. It must be submitted with the Project Prospectus. See Chapter 22 for instructions on completing the agreement. (Note: Not needed for planning and TDM projects.)
6.	**Deviation Request**	See Section 41.72.
7.	**Hearing Notices**	Chapters 24 and 43 outlines procedures for public hearings.
8.	**Location and Design Approval**	For most projects, the Project Prospectus along with the data satisfying items 1 to 14 of this transmittal pavement design criteria and geometric design will be considered sufficient for the location and design report. For complicated projects requiring a more detailed location and design report, refer to Chapter 43.
9.	**Right-of-Way Requirements**	a. No right-of-way required. Mark appropriate box on prospectus. This serves as the agency's right-of-way certification. (This replaces the no right-of-way certification.) b. Right-of-way required. Mark appropriate box on prospectus and refer to Chapter 25 for further instructions.
10.	**Right-of-Way Certification**	Required on all projects where right-of-way was acquired. Refer to Chapter 25 for further explanation.
11.	**Agreements/Easements With Railroads**	Refer to Chapter 32 for instructions.
12.	**FAA Notification**	Check with the nearest FAA office if the project is within 3.2 km (2 miles) of an airport, if significant.

13. Tied Bids

If the project has tied bids (see Chapter 44), indicate the approval date. If the project is tied to another federally funded project, include the federal aid project number of the project, along with other information outlined in Section 44.

4:P:LAG2

To ensure that reproductions are readable, please use a typewriter or ink when completing all forms.

Federal Aid Project Number **Code the PREFIX and ROUTE number as outlined below:**

Prefix Code	Description
STPUL	STP Urban Funds, population greater than 200,000 (Seattle/Everett, Spokane, Clark County)
STPUS	STP Urban Funds, population 5,000 to 200,000
STPR	STP Rural Funds, population less than 5,000
STPE	Enhancement Program (Section 12.32C)
STPF	Flex Program
CM	Congestion Mitigation/Air Quality Program Nonattainment Areas, population greater than 200,000
STPX	Safety program, elimination of rail-highway hazards on federal aid system
STPXP	Safety program, installation of rail-highway protective devices
STPH	Safety program, hazard elimination program
BRS	Bridge replacement project on rural system, financed with Bridge Replacement Funds
BRM	Bridge replacement project on urban system financed with Bridge Replacement Funds
BROS	Bridge replacement project not on the federal aid system but financed with Bridge Replacement Funds
ER	Project financed with Emergency Relief Funds

Route Code Description	Federal Aid Project Route Number Single Route	Multiple Routes
Seattle, Everett Metropolitan Area	4-digit federal route number	Number is 9999
STPUS/STPUL	4-digit federal route number	Number is 99 followed by county number
STPR	4-digit federal route number	Number is Z9 followed by county number
STPH	4-digit federal route number	Number is 000S
STPE	If statewide selection: 1. For federally functionally classified work, 4-digit federal route number nearest or parallel to 2. Use off-system rules If not statewide selection:	Same as single routes
	Number is EN followed by funding year (i.e., EN94)	Same as single routes
STPF	WSDOT to assign	WSDOT to assign
STPX/STPXP On-System Urban	4-digit federal route number	N/A
STPX/STPXP On-System Rural	4-digit federal route number	N/A
STPX/STPXP Off-System Urban	Number is city number	N/A
STPX/STPXP Off-System Rural	Number is 70 followed by county number	N/A
ER	Feds to assign	Feds to assign
BRS	4-digit federal route number	Number is Z9 followed by county number
BRM	4-digit federal route number	Number is 99 followed by county number
BROS	Use off-system rules	Same as single routes
Off-System County	Number is 20 followed by county number	Same as single routes
Off-System City	Number is city number	Same as single routes

Date — Form is filled out.

Local Agency Project Number — Required and limited to eight (8) alpha/numeric characters that your particular agency identifies projects.

Federal Employer Tax ID Number — Required and indicate the agency's tax identification number.

Agency — Required. This is your agency's name.

Federal Program Title — Enter the program number or title from the following list:

20.204	Highway Beautification
20.205	Highway Planning and Construction
20.206	Highway Planning and Research
20.209	Public Land Highways

Most local agency projects are 20.205.

Project Title — Write the project's title.

Project Termini — Indicate the beginning and ending limits of the section to be improved. For railway/highway grade crossing projects, show the name of the railroad involved. For intersection projects write the name of the crossroad.

From: To: — Indicate MP to MP or KP to KP.

Length of Project — Project's length in miles or kilometers.

Award Type — Mark the appropriate type.

Federal Agency — Indicate where the federal funds are coming from FHWA, etc.

City Number — For a city project, write the city number from Appendix 21.45.

County Number — Write your county number from Appendix 21.44.

County Name — Write the county the project is in.

WSDOT Region — Locate your WSDOT region number from Appendix 21.44 or 21.45.

Congressional District — Indicate the number of the congressional district or districts in which this project is located.

Legislative District — Indicate legislative district(s).

Urban Area Number — For projects inside urban areas, locate the appropriate urban area number from Appendix 21.46.

TMA/MPO/RTPO — For projects inside urban areas (population greater than 50,000), give the code which represents the MPO for your area.

Code	MPO
BFRC	Benton-Franklin Governmental Conference
SWRTC	Regional Planning Council of Clark County
PSRC	Puget Sound Council of Governments
SRTC	Spokane Regional Transportation Conference
YVCOG	Yakima County Conference of Governments
TRPC	Thurston Regional Planning Council
WCOG	Whatcom County Council of Governments
SWW	Cowlitz-Wahkiakum Governmental Conference

Total Estimated Cost — Required for each phase of the project; write in a total estimated cost.

Local Agency Funding — Required for each phase of the project; write in an estimated dollar amount of local agency funding.

Federal Funds — Required for each phase of the project; write in an estimated dollar amount of federal funds.

Percent Federal Funds

Enter the current participation ratio of funding authorized by the particular federal aid program (refer to Chapter 12).

Program	Participation
Bridge Replacement (BRM, BRS, BROS)	80.00%
Safety Projects (STPX, XP, H)	90.00%
Emergency Relief (ER)	100.00%
STP Projects/CM	86.50%

Obligation Date

Enter the month and year during which it is desired to begin expenditure for the phase.

Description of Existing Facility

In one or two paragraphs, give a detailed description of the existing facility including but not limited to: (1) type, pavement, lane and shoulder width, horizontal and vertical alignment; and (2) condition of existing surfacing and roadway within project limits, and on adjacent sections at each end of the project. Note any substandard existing alignment and grade or other project deficiencies.

Description of Proposed Work

Check whether the project is new construction, 3-R or 2-R as described in Chapter 42. Explain the nature of the improvement proposed such as widening of existing roadway for additional lanes or left-turn channelization; or to provide signalization to an intersection. Give the purpose of the improvement, such as upgrade facility to current standards, or to remedy a hazardous situation, or reduce congestion. Indicate the major work involved, such as grading, surfacing, bridge construction, drainage, etc. Give a contact person for the project in case there are questions.

Design Approval

On all federal aid transportation projects, agencies should document a location and design report to the agency and should document any evidence prior to requesting approval to acquire right-of-way or the preparation of the PS&E.

A project design cannot be approved before the environmental considerations have been approved by FHWA.

In most cases, the Project Prospectus serves as the location and design report and this space is provided for the approving authority of a CA agency to sign and date indicating the location and design approval.

When there is a subsequent change to the project design, an amended location-design approval is required.

Geometric Design Data

Refer to design report data and/or Chapter 42.

Accidents

Enter the required accident information in the appropriate blanks according to the following definitions.

There are three categories of accidents differentiated by increasing degrees of severity — property damage, injury, and fatal. An accident, irrespective of the number of vehicles involved or the number of persons killed or injured, is entered as one accident and defined as follows:

a. Property Damage Accident: If there is damage to one or more vehicles or property, with no injuries and no fatalities, this equals one property damage accident.

b. Injury Accident: If one or more persons are injured, regardless of property damage, this equals one injury accident.

c. Fatal Accident: If one or more persons are killed regardless of property damage, this equals one fatal accident.

Examples:

1. Vehicle leaves roadway and hits utility pole, but driver is not hurt.

   Category: Property Damage Acc.

2. Vehicle slows on roadway, is hit from behind and pushed into vehicle ahead. Two persons are injured.

   Category: Injury Accident (two persons injured)

3. Two vehicles collide at intersection and involve two other vehicles. Two people are killed, three occupants are injured, and one pedestrian is injured.

   Category: Fatal Accident (two fatalities, four injuries)

   If the above examples were all of the accidents for a location during a year, the total annual accident experience would indicate:

1	Property damage
1	Injury accident
1	Fatal accident
3	Accidents total
6	Persons injured
2	Persons killed

   All accident, injury, and fatality information must be derived from official records.

Performance of Work

PE: Indicate who will be performing the work and the percentage of the work they will do.

CN: Indicate if work is to be done by contract and/or local forces and the percentage to be done by each.

Environmental Classification

Mark the appropriate NEPA class of the project as defined in Chapter 24.2.

Class I, if the nature of the proposed improvement is likely to have a significant impact on the environment and an "Environmental Impact Statement" (EIS) is required. Check the box pertaining to the NEPA/SEPA/Section 404 Interagency Agreement if the project requires an individual permit from the U.S. Corps of Engineers.

Class II, if the project is not expected to have a significant impact on the environment and a "Categorical Exclusion" (CE) is determined and indicate which subcategory of the CE the project falls under.

Class III, when the significance of the impact on the environment is not clearly established and an "Environmental Assessment" (EA) will be required. Check the box pertaining to the NEPA/SEPA/Section 404 Interagency Agreement if the project requires an individual permit from the U.S. Corps of Engineers.

Environmental Considerations

If the box for either a Class I or Class III category action is checked under the Environmental Classification section, make reference to the enclosed Environmental Classification Summary Form marked preliminary. If the project is a Class II subcategory "Projects That Require Documentation Without Further FHWA Approval," indicate the environmental documentation is on file at the Regional TransAid Office. If the project is a Class II subcategory "Projects That Require Documentation and FHWA Approval," make reference to the enclosed Environmental Classification Summary Form, if available at this time, or in a brief narrative, describe the environmental impact of the proposed project.

Right-of-Way Requirements

a. No right-of-way required. Projects need only check no right-of-way.

b. Right-of-way required. A Right-of-Way Project Funding Estimate or True Cost Estimate, a Right-of-Way Plan, and a Relocation Plan (if required).

If right-of-way acquisition becomes necessary on a job previously submitted as having no right-of-way, a Project Funding Estimate or True Cost Estimate would need to be submitted to the Regional TransAid Engineer.

Description of Utility Relocation or Adjustments and Existing Major Structures Involved

Indicate the agency responsible for any relocation and/or adjustments.

a. Existing utilities-type of utility, publicly or privately owned, and other pertinent information.

b. Existing major structures — number, year built, overall length and conditions, roadway width, estimated or posted capacity, and proposed treatment of any substandard structures to remain in place.

5:P:LAG2

List of County Code Numbers and WSDOT Region Numbers

County Name	WSDOT Region Number	County Code Number
*Adams	6	01
Asotin	5	02
Benton	5	03
Chelan	2	04
Clallam	3	05
Clark	4	06
*Columbia	5	07
Cowlitz	4	08
Douglas	2	09
*Ferry	6	10
Franklin	5	11
*Garfield	5	12
Grant	2	13
Grays Harbor	3	14
Island	1	15
Jefferson	3	16
King	1	17
Kitsap	3	18
Kittitas	5	19
*Klickitat	4	20
Lewis	4	21
*Lincoln	6	22
Mason	3	23
*Okanogan	2	24
*Pacific	4	25
*Pend Oreille	6	26
Pierce	3	27
*San Juan	1	28
Skagit	1	29
*Skamania	4	30
Snohomish	1	31
Spokane	6	32
*Stevens	6	33
Thurston	3	34
*Wahkiakum	4	35
Walla Walla	5	36
Whatcom	1	37
Whitman	6	38
Yakima	5	39

*Counties without urban areas since 1980.

6:P:LAG2

Place Name	County Code Number	WSDOT Region No.	City Code Number
Aberdeen	14	3	0005
Airway Heights	32	6	0010
Albion	38	6	0015
Algona	17	1	0020
Almira	22	6	0025
Anacortes	29	1	0030
Arlington	31	1	0045
Asotin	02	5	0050
Auburn	17	1	0055
Bainbridge Island	18	3	0058
Battleground	06	4	0060
Beaux Arts Village	17	1	0070
Bellevue	17	1	0075
Bellingham	37	1	0080
Benton City	03	5	0085
Bingen	20	4	0090
Black Diamond	17	1	0095
Blaine	37	1	0100
Bonney Lake	27	3	0105
Bothell	17, 31	1	0110
Bremerton	18	3	0115
Brewster	24	2	0120
Bridgeport	09	2	0125
Brier	31	1	0127
Buckley	27	3	0130
Bucoda	34	3	0135
Burien	17	1	0138
Burlington	29	1	0140
Camas	06	4	0145
Carbonado	27	3	0150
Carnation	17	1	0155
Cashmere	04	2	0165
Castle Rock	08	4	0170
Cathlamet	35	4	0175
Centralia	21	4	0180
Chehalis	21	4	0190
Chelan	04	2	0195
Cheney	32	6	0200
Chewelah	33	6	0205
Clarkston	02	5	0215
Cle Elum	19	5	0220
Clyde Hill	17	1	0225
Colfax	38	6	0230
College Place	36	5	0235
Colton	38	6	0240
Colville	33	6	0250
Conconully	24	2	0255
Concrete	29	1	0260
Connell	11	5	0265
Cosmopolis	14	3	0270
Coulee City	13	2	0275
Coulee Dam	24	2	0280
Coupeville	15	1	0290
Covington	17	1	0293
Creston	22	6	0295
Cusick	26	6	0300
Darrington	31	1	0305
Davenport	22	6	0310
Dayton	07	5	0315
Deer Park	32	6	0320
Des Moines	17	1	0325
Dupont	27	3	0330
Duvall	17	1	0335
East Wenatchee	09	2	0350
Eatonville	27	3	0360
Edgewood	27	3	0362
Edmonds	31	1	0365
Electric City	13	2	0375
Ellensburg	19	5	0380
Elma	14	3	0385
Elmer City	24	2	0390
Endicott	38	6	0395
Entiat	04	2	0405
Enumclaw	17	1	0410
Ephrata	13	2	0415
Everett	31	1	0420
Everson	37	1	0425
Fairfield	32	6	0430
Farmington	38	6	0440
Federal Way	17	1	0443
Ferndale	37	1	0445
Fife	27	3	0450
Fircrest	27	3	0455
Forks	05	3	0465
Friday Harbor	28	1	0470
Garfield	38	6	0480
George	13	2	0489
Gig Harbor	27	3	0490
Gold Bar	31	1	0495
Goldendale	20	4	0500
Grand Coulee	13	2	0510
Grandview	39	5	0515
Granger	39	5	0520
Granite Falls	31	1	0525

Place Name	County Code Number	WSDOT Region No.	City Code Number
Hamilton	29	1	0535
Harrah	39	5	0540
Harrington	22	6	0545
Hartline	13	2	0550
Hatton	01	6	0555
Hoquiam	14	3	0560
Hunts Point	17	1	0570
Ilwaco	25	4	0575
Index	31	1	0580
Ione	26	6	0585
Issaquah	17	1	0590
Kahlotus	11	5	0595
Kalama	08	4	0600
Kelso	08	4	0605
Kennewick	03	5	0610
Kent	17	1	0615
Kettle Falls	33	6	0620
Kirkland	17	1	0625
Kittitas	19	5	0630
Krupp	13	2	0635
La Center	06	4	0640
Lacey	34	3	0643
La Conner	29	1	0650
LaCrosse	38	6	0655
Lake Forest Park	17	1	0657
Lake Stevens	31	1	0664
Lakewood	27	3	0665
Lamont	38	6	0668
Langley	15	1	0670
Latah	32	6	0675
Leavenworth	04	2	0680
Lind	01	6	0685
Long Beach	25	4	0690
Longview	08	4	0695
Lyman	29	1	0705
Lynden	37	1	0710
Lynnwood	31	1	0715
McCleary	34	3	0728
Mabton	39	5	0725
Malden	38	6	0730
Mansfield	09	2	0735
Maple Valley	17	1	0739
Marcus	33	6	0740
Marysville	31	1	0745
Mattawa	13	2	0750
Medical Lake	32	6	0755
Mercer Island(Cty)	17	1	0763
Medina	17	1	0760
Mesa	11	5	0765
Metaline	26	6	0770

Place Name	County Code Number	WSDOT Region No.	City Code Number
Metaline Falls	26	6	0775
Mill Creek	31	1	0778
Millwood	32	6	0780
Milton	17,27	3	0785
Monroe	31	1	0790
Montesano	14	3	0795
Morton	21	4	0800
Moses Lake	13	2	0805
Mossy Rock	21	4	0810
Mountlake Terrace	31	1	0815
Mount Vernon	29	1	0820
Moxee City	39	5	0825
Mukilteo	31	1	0830
Naches	39	5	0835
Napavine	21	4	0840
Nespelem	24	2	0855
New Castle	17	1	0858
Newport	26	6	0860
Newport Hills	17	1	0863
Nooksack	37	1	0865
Normandy Park	17	1	0870
North Bend	17	1	0875
North Bonneville	30	4	0877
Northport	33	6	0885
Oakesdale	38	6	0890
Oak Harbor	15	1	0895
Oakville	14	3	0900
Ocean Shores	14	3	0907
Odessa	22	6	0910
Okanogan	24	2	0915
Olympia	34	3	0920
Omak	24	2	0925
Oroville	24	2	0935
Orting	27	3	0940
Othello	01	2	0945
Pacific	17	1	0950
Palouse	38	6	0955
Pasco	11	5	0960
Pateros	24	2	0970
PeEll	21	4	0975
Pomeroy	12	5	0985
Port Angeles	05	3	0990
Port Orchard	18	3	1000
Port Townsend	16	3	1005
Poulsbo	18	3	1010
Prescott	36	5	1015
Prosser	03	5	1020
Pullman	38	6	1025
Puyallup	27	3	1030
Quincy	13	2	1040

Place Name	County Code Number	WSDOT Region No.	City Code Number	Place Name	County Code Number	WSDOT Region No.	City Code Number
Rainier	34	3	1050	Tacoma	27	3	1280
Raymond	25	4	1055	Tekoa	38	6	1285
Reardan	22	6	1060	Tenino	34	3	1290
Redmond	17	1	1065	Tieton	39	5	1295
Renton	17	1	1070	Toledo	21	4	1300
Republic	10	6	1075	Tonasket	24	2	1305
Richland	03	5	1080	Toppenish	39	5	1310
Ridgefield	06	4	1085	Tukwila	17	1	1320
Ritzville	01	6	1090	Tumwater	34	3	1325
Riverside	24	2	1095	Twisp	24	2	1330
Rockford	32	6	1100				
Rock Island	09	2	1105	Union Gap	39	5	1335
Rosalia	38	6	1115	Uniontown	38	6	1340
Roslyn	19	5	1120	University Place	27	3	1343
Roy	27	3	1125				
Royal City	13	2	1127	Vader	21	4	1345
Ruston	27	3	1130	Vancouver	06	4	1350
St. John	38	6	1135	Waitsburg	36	5	1360
SeaTac	17	1	1139	Walla Walla	36	5	1365
Seattle	17	1	1140	Wapato	39	5	1375
Sedro Woolley	29	1	1150	Warden	13	2	1380
Selah	39	5	1155	Washougal	06	4	1385
Sequim	05	3	1160	Washtucna	01	6	1390
Shelton	23	3	1165	Waterville	09	2	1395
Shoreline	17	1	1169	Waverly	32	6	1400
Skykomish	17	1	1175	Wenatchee	04	2	1405
Snohomish	31	1	1180	Westport	14	3	1420
Snoqualmie	17	1	1185	West Richland	03	5	1425
Soap Lake	13	2	1190	White Salmon	20	4	1435
South Bend	25	4	1195	Wilbur	22	6	1440
South Cle Elum	19	5	1205	Wilkeson	27	3	1445
South Prairie	27	3	1210	Wilson Creek	13	2	1450
Spangle	32	6	1215	Winlock	21	4	1455
Spokane	32	6	1220	Winslow	18	3	1460
Sprague	22	6	1225	Winthrop	24	2	1465
Springdale	33	6	1230	Woodinville	17	1	1469
Stanwood	31	1	1235	Woodland	08	4	1470
Starbuck	07	5	1240	Woodway	31	1	1475
Steilacoom	27	3	1245				
Stevenson	30	4	1250	Yacolt	06	4	1480
Sultan	31	1	1255	Yakima	39	5	1485
Sumas	37	1	1265	Yarrow Point	17	1	1490
Sumner	27	3	1270	Yelm	34	3	1495
Sunnyside	39	5	1275				
				Zillah	39	5	1500

7:P:LAG2

1. Seattle and Everett
2. Spokane
3. Vancouver
4. Pasco, Kennewick, Richland
5. Yakima, Union Gap, Selah
6. Olympia, Lacey, Tumwater
7. Bremerton, Port Orchard
8. Bellingham
9. Kelso, Longview
10. Aberdeen, Cosmpolis, Hoquiam
11. Walla Walla, College Place
12. Pullman
13. Wenatchee, East Wenatchee
14. Port Angeles
15. Centralia, Chehalis
16. Camas, Washougal
17. Ellensburg
18. Moses Lake, Grant County
19. Oak Harbor
20. Shelton
21. Anacortes
22. Mount Vernon, Burlington
23. Cheney
24. Sunnyside
25. Ephrata
26. Clarkston
27. Toppenish
28. Port Townsend
29. Tacoma
30. Sedro Woolley
31. Grandview
32. Enumclaw
33. Ferndale
34. Lynden
35. Otis Orchards

8:P:LAG2

Washington State Department of Transportation

Local Agency Federal Aid Project Prospectus

	Prefix	Route	( )
Federal Aid Project Number			
Local Agency Project Number			

Date	
Federal Employer Tax ID Number	

Agency	Federal Program Title ☐ 20.204 ☐ 20.205 ☐ 20.206 ☐ 20.209 ☐ Other
Project Title	
Project Termini From	To

From: To:	Length of Project	Award Type ☐ Local ☐ Local Forces ☐ State ☐ Railroad

Federal Agency ☐ FHWA ☐ Others _____	City Number	County Number	County Name	WSDOT Region

Congressional District	Legislative Districts	Urban Area Number	TMA / MPO / RTPO

Phase	Total Estimated Cost (Nearest Dollar)	Local Agency Funding (Nearest Dollar)	Federal Funds (Nearest Dollar)	Percent Federal Funds	Obligation Date Month Year
P.E.					
R/W					
Const.					
Total					

Description of Existing Facility (Existing Design and Present Condition)

Roadway Width	Number of Lanes

Description of Proposed Work

☐ New Construction ☐ 3-R ☐ 2-R	Roadway Width	Number of Lanes

Local Agency Contact Person	Title	Phone

Mailing Address	City	State	Zip Code

Design Approval (CA Agencies Only)

By _____
Approving Authority

Title _____ Date _____

Agency	Project Title	Date

Geometric Design Data

Description	Through Route	Crossroad
Federal Functional Classification	☐ Urban: ☐ Principal Arterial ☐ Minor Arterial ☐ Collector ☐ Rural: ☐ Major Collector ☐ Minor Collector ☐ Access Street/Road	☐ Urban: ☐ Principal Arterial ☐ Minor Arterial ☐ Collector ☐ Rural: ☐ Major Collector ☐ Minor Collector ☐ Access Street/Road
Terrain	☐ Flat ☐ Roll ☐ Mountain	☐ Flat ☐ Roll ☐ Mountain
Posted Speed		
Design Speed		
Existing ADT		
Design Year ADT		
Design Year		
Design Hourly Volume (DHV)		

Accident - 3 Year Experience

Year	Property Damage Accidents	Injury Accidents		Fatal Accidents		Total Number of Accidents
		Number of Accidents	Number of Injuries	Number of Accidents	Number of Fatalities	
Total Number of Accidents Attributable to Lack of having the Proposed Improvement						

Performance of Work

Preliminary Engineering Will Be Performed By	Others %	Agency %
Construction Will Be Performed By	Contract %	Agency %

Environmental Classification

☐ **Final** ☐ **Preliminary**

☐ Class I - Environmental Impact Statement (EIS)

- ☐ Project Involves NEPA/SEPA Section 404 Interagency Agreement

☐ Class III - Environmental Assessment (EA)

- ☐ Project Involves NEPA/SEPA Section 404 Interagency Agreement

☐ Class II - Categorically Excluded (CE)

- ☐ Projects Not Requiring Documentation for FHWA Approval (23CFR 771.117(c))
- ☐ Projects Requiring Documentation Without Further FHWA Approval (FHWA/WSDOT MOU dated 2/90)
- ☐ Projects that Require Documentation and FHWA Approval (Documented CE)

Environmental Considerations

Agency	Project Title	Date

Right of Way

☐ No Right of Way Required * All construction required by the contract can be accomplished within the existing right of way.	☐ Right of Way Required ☐ No Relocation	☐ Relocation Required

Description of Utility Relocation or Adjustments and Existing Major Structures Involved in the Project

FAA Involvement

Is any airport located within 3.2 kilometers (2 miles) of the proposed project? ☐ Yes ☐ No

Remarks

This project has been reviewed by the legislative body of the administration agency or agencies, or it's designee, and is not inconsistent with the agency's comprehensive plan for community development.

Agency _____

Date _____ By _____

Mayor/Chairperson

FEDERAL-AID PROJECT PROSPECTUS
PLANNING SCOPE OF WORK

Agency _____ Federal Aid Project Number _____ _____ ___

Project Title _____

Federal Funding Program _____ Amount _____

Matching Funds _____ Total Amount _____

Project Area

Background

Type of Study (check all that apply)

Region _____ Area _____ Corridor _____ Intersection _____

Design _____ Feasibility _____ Modeling _____

Other _____

Scope of Work

Public Involvement Plan

Environmental Considerations

TDM/TSM and Transit alternatives to be considered

Land Use Implications

Project schedule

Cost Breakdown by Task

Deliverable Final Products

Washington State
Department of Transportation

SPECIAL TRANSPORTATION PLANNING STUDY AGREEMENT WORK BY PLANNING ORGANIZATION ACTUAL COST		ORGANIZATION AND ADDRESS
AGREEMENT NO.	TOTAL AMOUNT AUTHORIZED	PROJECT TITLE AND DESCRIPTION
PROJECT MANAGER	AGREEMENT EXPIRATION DATE	

This AGREEMENT, made and entered into this _____ day of _____, 19_____, between the STATE OF WASHINGTON, Department of Transportation, acting by and through the Secretary of Transportation, hereinafter called the "STATE," and the above named organization, hereinafter called the "PLANNING AGENCY."

WHEREAS, the STATE and the PLANNING AGENCY recognize the need for the transportation planning project, described above, and

WHEREAS, it is deemed in the best interest of the STATE to participate in funding said project for the mutual benefit of local and state roadway planning in the area of the project, and

WHEREAS, the STATE and the PLANNING AGENCY now wish to define responsibility for preparation of the transportation planning project.

NOW THEREFORE, it is mutually agreed as follows:

I
SCOPE OF WORK

The PLANNING AGENCY shall undertake the Transportation Planning Project described above, which shall include the tasks set forth in Exhibit "A," attached hereto.

II
SCHEDULE

The project period shall commence upon execution of this agreement and shall last until the expiration date listed above.

III
PAYMENT

The STATE agrees to reimburse the PLANNING AGENCY's actual direct and related indirect costs of the project. The maximum amount that the STATE shall reimburse the PLANNING AGENCY shall not exceed the "Total Amount Authorized" listed above. Payment by task shall be made as set forth in Exhibit "A." All costs must be consistent with the Federal cost principles contained in OMB Circular A-87.

The PLANNING AGENCY shall submit to the STATE requests for funds as they are expended on the project, but not to exceed one such request every month. Such requests for reimbursement shall document the amount of funds that have been expended during the period for the total project, as well as for the current billing period. The STATE shall review and approve each request for payment in an expeditious manner and shall make payment within 30 days after approval of the payment request.

IV
REPORTS

The PLANNING AGENCY shall, from time to time during the progress of the work, confer with the STATE. The PLANNING AGENCY shall prepare and present quarterly progress reports for each calendar quarter during the course of the project. Each such progress report shall be submitted no later than 21 calendar days following the end of the reporting period. Each progress report shall include such information as may be pertinent and necessary or as may be requested, in writing, by the STATE in order to pass critical judgment on features of the work, including expenditures (quarterly and to-date), work progress, and problems. The PLANNING AGENCY shall make such changes, amendments, or revisions in the detail of the work as may be required by the STATE.

A final report documenting the planning project, including interim and task reports which provide documentation of all technical data and their analysis, shall be prepared by the PLANNING AGENCY. The PLANNING AGENCY shall submit five copies of the final report to the STATE for acceptance. This requirement for a final report may be waived in writing by the STATE.

V
MODIFICATIONS

Either party may request changes in these provisions. Such changes which are mutually agreed upon shall be incorporated as written amendments to this Agreement. No variation or alteration of the terms of this Agreement shall be valid unless made in writing and signed by authorized representatives of the parties hereto.

VI
AUDITS, INSPECTION, AND RETENTION OF RECORDS

All project records in support of all costs incurred and actual expenditures kept by the PLANNING AGENCY are to be maintained in accordance with procedures prescribed by the Division of Municipal Corporations of the State Auditor's Office, the U.S. Department of Transportation, and the STATE.

The STATE, and any of its representatives, shall have full access to and the right to examine, during normal business hours and as often as they deem necessary, all of the PLANNING AGENCY's records with respect to all

matters covered by this contract. Such representatives shall be permitted to audit, examine, and make excerpts or transcripts from such records and to make audits of all contracts, invoices, materials, payrolls, and other matters covered by this contract. All documents, papers accounting records, and other material pertaining to costs incurred in connection with the project shall be retained by the PLANNING AGENCY for three years after the STATE's written notice that the project is complete and the Agreement is terminated. Copies thereof shall be furnished if requested.

In accordance with OMB Circular A-128 regulations, the PLANNING AGENCY is required to arrange for audit of funds expended.

VII
TERMINATION

If it is considered in the best interests of the STATE, the STATE may terminate this Agreement upon giving ten (10) days notice in writing to the PLANNING AGENCY. If this Agreement is so terminated prior to fulfillment of the terms stated herein, the PLANNING AGENCY shall be reimbursed only for actual expenses and noncancelable obligations, both direct and indirect, incurred to the date of termination.

VIII
LEGAL RELATIONS

The PLANNING AGENCY shall comply with all Federal, State and Local Laws and Ordinances applicable to the work to be done under this Agreement.

Each party to this Agreement shall be responsible for damage to persons or property resulting from the negligence on the part of itself, its employees, its agents, or its officers. Neither party assumes any responsibility to the other party for the consequences of any act or omission of any person, firm, or corporation not a party to this Agreement.

IX
SUBCONTRACTING

The services of the PLANNING AGENCY are to be directed by the Project Manager identified above. The PLANNING AGENCY shall not assign, sublet, or transfer any of the work provided for under this Agreement without prior written approval from the STATE, and the STATE shall review and approve the PLANNING AGENCY's consultant agreement prior to execution. The PLANNING AGENCY shall comply with all Federal and State laws and regulations governing the selection and employment of consultants. The State reserves the right to appoint a representative to serve on the Consultant Selection Committee. Subcontracts greater than $10,000 must contain all the required provisions of this contract.

X
TRAVEL

Any out-of-state travel must have prior written approval of the STATE to be eligible for reimbursement. Current STATE travel regulations and rates shall apply to all in-state and out-of-state travel for which reimbursement is claimed during the term of this Agreement.

XI
LIABILITY

No liability shall attach to the STATE or the PLANNING AGENCY by reason of entering into this Agreement except as expressly provided herein.

XII
INDEPENDENT CONTRACTOR

The PLANNING AGENCY shall be deemed an independent contractor for all purposes and the employees of the PLANNING AGENCY or any of its contractors, subcontractors, and the employees thereof, shall not in any manner be deemed to be employees of the STATE.

XIII
EQUAL EMPLOYMENT OPPORTUNITY

The PLANNING AGENCY agrees to abide by all State and Federal regulations with respect to employment. This includes, but is not limited to, equal opportunity employment, nondiscrimination assurances, project record keeping, audits, inspection, and retention of records and will adhere to all of the nondiscrimination provisions set forth in Exhibit "C" attached hereto.

XIV
SEVERABILITY

If any covenant or provision in this Agreement shall be adjudged void, such adjudication shall not affect the validity, obligation, or performance of any other covenant or provision which in itself is valid, if such remainder would then continue to conform to the terms and requirements of applicable law and the intent of this contract.

XV
EQUIPMENT

All equipment to be purchased under this Agreement shall be listed in the scope of work. All equipment must be purchased, managed, and disposed of in accordance with OMB Circular A-102 Attachment N.

EXHIBIT C
TITLE 6, CIVIL RIGHTS ACT OF 1964

During the performance of this Agreement, the Planning Agency, for itself, its assignees, and successors in interest, hereinafter referred to as the "Consultant," agree as follows:

1. Compliance With Regulations: The Consultant will comply with the Regulations of the Department of Transportation relative to nondiscrimination in Federally-assisted programs of the Department of Transportation Title 49, Code of Federal Regulations, Part 21, hereinafter referred and made a part of this Agreement.

2. Nondiscrimination: The Consultant, with regard to the work performed by it after award and prior to completion of the contract work, will not discriminate on the grounds of race, color, or national origin in the selection and retention of subcontractors, including procurements of materials and leases of equipment. The Consultant will not participate either directly or indirectly in the discrimination prohibited by Section 8.4 of the Regulations, including employment practices when the contract covers a program set forth in Appendix A-11 of the Regulations.

3. Solicitations for Subcontracts, Including Procurements of Materials and Equipment: In all solicitations either by competitive bidding or negotiation made by the Consultant for work to be performed under a subcontract, including procurements of materials or equipment, each potential subcontractor or supplier shall be notified by the Consultant of the Consultant's obligations under this contract and the Regulations relative to nondiscrimination on the grounds of race, color, or national origin.

4. Information and Reports: The Consultant will provide all information and reports required by the Regulations, or orders and instructions issued pursuant thereto, and will permit access to its books, records, accounts, other sources of information, and its facilities as may be determined by the State Transportation Department or the Federal Highway Administration to be pertinent to ascertain compliance with such regulations, orders, and instructions. Where any information required of the Consultant is in the exclusive possession of another who fails or refuses to furnish this information, the Consultant shall so certify to the State Transportation Department, or the Federal Highway Administration as appropriate, and shall set forth what efforts it has made to obtain the information.

5. Sanctions for Noncompliance: In the event of the Consultant's noncompliance with the nondiscrimination provisions of this contract, the State Transportation Department shall impose such contract sanctions as it or the Federal Highway Administration may determine to be appropriate, including, but not limited to:

a. Withholding of payment to the Consultant under the contract until the consultant complies, and/or

b. Cancellation, termination, or suspension of the contract, in whole or in part.

6. Incorporation of Provisions: The Consultant will include the provisions of paragraphs (1) through (6) in every subcontract, including procurements of materials and leases of equipment, unless exempt by the Regulations, order, or instructions issued pursuant thereto. The consultant will take such action with respect to any subcontract or procurements as the State Transportation Department or the Federal Highway Administration may direct as a means of enforcing such provisions including sanctions for noncompliance. Provided, however, that in the event the consultant becomes involved in, or is threatened with litigation with a subcontractor or supplier as a result of such direction, the consultant may request the State to enter into such litigation to protect the interest of the United States.

IN WITNESS WHEREOF, the parties hereto have executed this AGREEMENT on the day and year last written below.

PLANNING AGENCY

By: _____

Title: _____

Date: _____

STATE

By: _____
Assistant Secretary

Date: _____

Approved as to form:

By: _____
Assistant Attorney General

Date: _____

22.1 General Discussion

A Local Agency Agreement is an agreement between a local agency and the Washington State Department of Transportation (WSDOT). An agreement is prepared for each federal aid project, and it covers all phases of work involved in the project (preliminary engineering, right-of-way acquisition, construction). Its purpose is to ensure that the federal funds in the agreed-upon amount are spent in accordance with all applicable state and federal laws and regulations. The agreement also specifies the procedure for payment and reimbursement on the project. Appendix 22.45 is used if funds are not available for the local match.

If the federal aid participation ratio entered in the agreement is not the full amount allowed by the Federal Highway Administration (FHWA), then the participation ratio entered becomes the limit of funding allowed.

***The execution of the local agency agreement does not constitute approval of federal funds.* No costs are eligible for federal aid reimbursement until authorized in writing by WSDOT. This authorization is separate from the agreement.**

22.2 Preparation Procedure

An original Local Agency Agreement signed by the approving authority must be submitted by the local agency to the Regional TransAid Engineer when the Project Prospectus (Chapter 21) is submitted. This agreement form will be retained by WSDOT. It is the responsibility of the local agency to submit an additional agreement form or a copy if they need an executed agreement for their files. To allow sufficient time for WSDOT review and execution, these documents should be submitted well in advance of the time when federal reimbursement is desired.

Agreements containing errors will be returned to the local agency for correction. Any changes must be initialed by the approving authority (Chapter 13). To avoid this delay, the agency should check all figures prior to submittal, and if in doubt, request assistance from the Regional TransAid Engineer.

An agreement form (WSDOT Form 140-039) is contained in Appendix 22.41, with instructions for completing it in Appendix 22.42. Local agency cost estimates for each phase of a project are entered on the form, as well as the project name, length, termini, description, and method of construction financing. These methods are described in Appendix 22.42.

Local agency resolutions or ordinances that may be needed are discussed in Appendix 22.42.

22.3 Supplemental Agreement

Funds requested beyond the amount set forth in a Local Agency Agreement will require execution of a Supplemental Agreement. When the local agency becomes aware that costs are going to decrease or increase overrun the agreement amount for any project phase, it should immediately contact the Regional TransAid Engineer to determine if federal funds are available. If federal funds are available, prepare and submit a Supplemental Agreement and justification for the overrun.

Changes to the project funding must be made in accordance with this manual (see Chapter 12). Projects that exceed the agreement amount at the time of construction contract award must receive written approval from the state for the additional federal funds required. This requires that the local agency prepare, sign, and submit a Supplemental Agreement to the Regional TransAid Engineer before the approving authority concurs in the contract award. Overruns during construction must be explained and justified in the final Supplemental Agreement which is submitted at the conclusion of the construction phase.

Federal aid funds may be shifted among various types of agency work as long as the total amount remains unchanged. In this case, local officials may delegate to a staff member the authority to sign Supplemental Agreements that authorize these shifts in funds. For example, the agency engineer may be authorized to increase the federal funds earmarked for a project's construction contract and decrease those earmarked for its agency-force engineering by a like amount.

A Supplemental Agreement form (WSDOT Form 140-041) is shown in Appendix 22.43, and instructions for completing it are given in Appendix 22.44. Like the original agreement form, the Supplemental Agreement form requires information about the project's name, length, termini, description, and funding.

22.4 Appendixes

22.41 Sample Agreement

22.42 Instructions for Preparing Local Agency Agreement

22.43 Sample Supplemental Agreement

22.44 Instructions for Preparing Supplemental Agreement

22.45 Sample Withholding Resolution for Construction Financing Method B

Forms

DOT 140-039 Local Agency Agreement

DOT 140-041 Supplemental Agreement

10:P:LAG2B

Washington State Department of Transportation

Local Agency Agreement

Agency CITY OF AUBURN **Project No.** STPE-CCSS (002)

Address 25 West Main Street **Agreement No.**

Auburn, WA 98001-4998 **For Headquarters WSDOT use only.**

The Local Agency having complied, or hereby agreeing to comply, with the terms and conditions set forth in (1) Title 23, U.S. Code Highways, (2) the regulations issued pursuant thereto, (3) Office of Management and Budget Circulars A-102 and A-128, (4) the policies and procedures promulgated by the Washington State Department of Transportation, and (5) the federal aid project agreement entered into between the State and Federal Government, relative to the above project, the Washington State Department of Transportation will authorize the Local Agency to proceed on the project by a separate notification. Federal funds which are to be obligated for the project may not exceed the amount shown herein on line s, column 3, without written authority by the State, subject to the approval of the Federal Highway Administration. All project costs not reimbursed by the Federal Government shall be the responsibility of the Local Agency.

Project Description

Name Downtown Enhancement Project-Auburn Way S. to 'A' St. Length 800

Termini City CBD

Description of Work

This project consists of installing cement concrete sidewalks, trees, shrubs, and luminaires consistent with the recently completed Main Street colored and patterned sidewalk theme. Drainage, utility & garbage dumpster masking, and planter box improvements are also planned. The 'B' Street to Main Street will be realigned with reconstruction of pedestrian surfaces. Sidewalks along 'A' Street and Auburn Way South to Main Street will be improved.

Type of Work		Estimate of Funding (1) Estimated Total Project Funds	(2) Estimated Agency Funds	(3) Estimated Federal Funds
PE	a. Agency work	11,000	2,200	8,800
	b. Other Consultant	70,010	14,002	56,008
	c. State services	1,000	200	800
	d. Total PE cost estimate (a+b+c)	82,010	16,402	65,608
Right of Way	e. Agency work			
	f. Other			
	g. State services			
	h. Total R/W cost estimate (e+f+g)			
Construction	i. Contract	~~346,490~~ 308,365	~~99,798~~ 61,673	246,692
	j. Other			
	k. Other			
	l. Other	308,365	61,673	
	m. Total contract costs (i+j+k+l)	~~346,490~~	~~99,798~~	246,692
	Construction Engineering n. Agency	13,000	2,600	10,400
	o. Other Material Testing	5,000	1,000	4,000
	p. State forces	1,000	200	800
	q. Total construction engineering (n+o+p)	19,000	3,800	15,200
	r. Total construction cost Estimate (m+q)	~~365,490~~ 327,365	~~103,598~~ 65,473	261,892
	s. **Total cost estimate of the project** (d+h+r)	~~447,500~~ 409,375	~~120,000~~ 81,875	327,500

60 %
30% per
50%
$23.94

***Federal participation in construction engineering (q) is limited to 15 percent of the total contract costs (line m, column 3).**

The federal aid participation rate in this project will be determined by the Federal Government. The parties expect that it will be 80% percent; however, it is understood that the rate may vary. The Local Agency agrees that this agreement is entered into without relying upon any representation by the state made outside of this contract, or contained herein, as to what the federal participation rate will be. It further agrees that it will not condition any future actions with respect to the project covered by this agreement upon past, current, or future representations as to the federal participation rate. The dollar amount of federal participation cannot exceed the amount shown in line s, column 3. All costs not reimbursed by the Federal Government shall be the responsibility of the Local Agency.

DOT 140-039 (front) Revised 1/94

Construction Method of Financing

(check method selected)

State Ad and Award

☐ Method A — Advance Payment — Agency share of total construction cost (based on contract award)

☐ Method B — Withhold from gas tax the Agency's share of total construction cost (line 4, column 2) in the amount of

$ _____ at $ _____ per month for _____ months

Local Force or Local Ad and Award

☒ Method C — Agency cost incurred with partial reimbursement

The Local Agency further stipulates that pursuant to said Title 23, regulations and policies and procedures, and as a condition to payment of the federal funds obligated, it accepts and will comply with the applicable provisions set forth below. Adopted by official action on 3/2/94, 19 ____, Resolution/Ordinance No. _____

Agency Official

By Charles A. Beck

Mayor

City of Auburn

Washington State Department of Transportation

By Wayne A. Brown for

Assistant Secretary for Local Programs

Date Executed MAR 2 1 '94

Provisions

I. Scope of Work

The Agency shall provide all the work, labor, materials, and services necessary to perform the project which is described and set forth in detail in the "Project Description" and "Type of Work."

When the State acts for and on behalf of the Agency, the State shall be deemed an agent of the Agency and shall perform the services described and indicated in "Type of Work" on the face of this agreement, in accordance with plans and specifications as proposed by the Agency and approved by the State and the Federal Highway Administration.

When the State acts for the Agency but is not subject to the right of control by the Agency, the State shall have the right to perform the work subject to the ordinary procedures of the State and Federal Highway Administration.

II. Delegation of Authority

The State is willing to fulfill the responsibilities to the Federal Government by the administration of this project. The Agency agrees that the State shall have the full authority to carry out this administration. The State shall review, process, and approve documents required for federal aid reimbursement in accordance with federal requirements. If the State advertises and awards the contract, the State will further act for the Agency in all matters concerning the project as requested by the Agency. If the Local Agency advertises and awards the project, the State shall review the work to ensure conformity with the approved plans and specifications.

III. Project Administration

Certain types of work and services shall be provided by the State on this project as requested by the Agency and described in the Type of Work above. In addition, the State will furnish qualified personnel for the supervision and inspection of the work in progress. On Local Agency advertised and awarded projects, the supervision and inspection shall be limited to ensuring all work is in conformance with approved plans, specifications, and federal aid requirements. The salary of such engineer or other supervisor and all other salaries and costs incurred by State forces upon the project will be considered a cost thereof. All costs related to this project incurred by employees of the State in the customary manner on highway payrolls and vouchers shall be charged as costs of the project.

IV. Availability of Records

All project records in support of all costs incurred and actual expenditures kept by the Agency are to be maintained in accordance with procedures prescribed by the Division of Municipal Corporations of the State Auditor's Office, the U.S. Department of Transportation, and the Washington State Department of Transportation. The records shall be open to inspection by the State and Federal Government at all reasonable times and shall be retained and made available for such inspection for a period of not less than three years from the final payment of any federal aid funds to the Agency. Copies of said records shall be furnished to the State and/or Federal Government upon request.

V. Compliance with Provisions

The Agency shall not incur any federal aid participation costs on any classification of work on this project until authorized in writing by the State for each classification. The classifications of work for projects are:

1. Preliminary engineering up to and including approval.
2. Preparation of plans, specifications, and estimates.
3. Right of way acquisition.
4. Project construction.

In the event that right of way acquisition, or actual construction of the road, for which preliminary engineering is undertaken is not started by the closing of the tenth fiscal year following the fiscal year in which the agreement is executed, the Agency will repay to the State the sum or sums of federal funds paid to the Agency under the terms of this agreement (see Section VIII).

The Agency agrees that all stages of construction necessary to provide the initially planned complete facility within the limits of this project will conform to at least the minimum values set by approved statewide design standards applicable to this class of highways, even though such additional work is financed without federal aid participation.

The Agency agrees that on federal aid highway construction projects, the current federal aid regulations which apply to liquidated damages relative to the basis of federal participation in the project cost shall be applicable in the event the contractor fails to complete the contract within the contract time.

VI. Payment and Partial Reimbursement

The total cost of the project, including all review and engineering costs and other expenses of the State, is to be paid by the Agency and by the Federal Government. Federal funding shall be in accord with the Intermodal Surface Transportation Efficiency Act 1991, Title 23, United States Code, as amended, and Office of Management and Budget circulars A-102 and A-128. The State shall not be ultimately responsible for any of the costs of the project. The Agency shall be ultimately responsible for all costs associated with the project which are not reimbursed by the Federal Government. Nothing in this agreement shall be construed as a promise by the State as to the amount or nature of federal participation in this project.

DOT 140-039
Revised 1/94

1

1. Preliminary Engineering, Right of Way Acquisition, and Audit Costs

The Agency will pay for Agency incurred costs on the project. Following such payments, vouchers shall be submitted to the State in the format prescribed by the State, in quadruplicate, not more than one per month. The State will reimburse the Agency up to the amount shown on the face of this agreement for those costs eligible for federal participation to the extent that such costs are directly attributable and properly allocable to this project. Expenditures by the Local Agency for the establishment, maintenance, general administration, supervision, and other overhead shall not be eligible for federal participation.

The State will pay for State incurred costs on the project. Following payment, the State shall bill the Federal Government for reimbursement of those costs eligible for federal participation to the extent that such costs are attributable and properly allocable to this project. The State shall bill the Agency for that portion of State costs which were not reimbursed by the Federal Government (see Section VIII).

2. Project Construction Costs

Project construction financing will be accomplished by one of the three methods as indicated in this agreement.

Method A – The Agency will place with the State, within (20) days after the execution of the construction contract, an advance in the amount of the Agency's share of the total construction cost based on the contract award. The State will notify the Agency of the exact amount to be deposited with the State. The State will pay all costs incurred under the contract upon presentation of progress billings from the contractor. Following such payments, the State will submit a billing to the Federal Government for the federal aid participation share of the cost. When the project is substantially completed and final actual costs of the project can be determined, the State will present the Agency with a final billing showing the amount due the State or the amount due the Agency. This billing will be cleared by either a payment from the Agency to the State or by a refund from the State to the Agency.

Method B – The Agency's share of the total construction cost as shown on the face of this agreement shall be withheld from its monthly fuel tax allotments. The face of this agreement establishes the months in which the withholding shall take place and the exact amount to be withheld each month. The extent of withholding will be confirmed by letter from the State at the time of contract award. Upon receipt of progress billings from the contractor, the State will submit such billings to the Federal Government for payment of its participating portion of such billings.

Method C – The Agency may submit vouchers to the State in the format prescribed by the State, in quadruplicate, not more than once per month for those costs eligible for Federal participation to the extent that such costs are directly attributable and properly allocable to this project. Expenditures by the Local Agency for the establishment, maintenance, general administration, supervision, and other overhead shall not be eligible for Federal participation.

The State shall reimburse the Agency for the Federal share of eligible project costs up to the amount shown on the face of this agreement. At the time of audit, the Agency will provide documentation of all costs incurred on the project.

The State shall bill the Agency for all costs incurred by the State relative to the project. The State shall also bill the Agency for the federal funds paid by the State to the Agency for project costs which are subsequently determined to be ineligible for federal participation (see Section VIII).

VII. Audit of Federal Aid Project

The Agency, if services of a consultant are required, shall be responsible for audit of the consultant's records to determine eligible federal aid costs on the project. The report of said audit shall be in the Agency's files and made available to the State and the Federal Government.

An audit shall be conducted by the WSDOT Internal Audit Office in accordance with generally accepted governmental auditing standards as issued by the United States General Accounting Office by the Comptroller General of the United States; WSDOT Directive D27-50, Consultant Authorization, Selection, and Agreement Administration; memoranda of understanding between WSDOT and FHWA; and Office of Management and Budget Circular A-128.

If upon audit it is found that overpayment or participation of federal money in ineligible items of cost has occurred, the Agency shall reimburse the State for the amount of such overpayment or excess participation (see Section VIII).

VIII. Payment of Billing

The Agency agrees that if payment or arrangement for payment of any of the State's billing relative to the project (e.g., State force work, project cancellation, overpayment, cost ineligible for federal participation, etc.) is not made to the State within 45 days after the Agency has been billed, the State shall effect reimbursement of the total sum due from the regular monthly fuel tax allotments to the Agency from the Motor Vehicle Fund. No additional Federal project funding will be approved until full payment is received unless otherwise directed by the Assistant Secretary for Local Programs.

IX. Traffic Control, Signing, Marking, and Roadway Maintenance

The Agency will not permit any changes to be made in the provisions for parking regulations and traffic control on this project without prior approval of the State and Federal Highway Administration. The Agency will not install or permit to be installed any signs, signals, or markings not in conformance with the standards approved by the Federal Highway Administration and MUTCD. The Agency will, at its own expense, maintain the improvement covered by this agreement.

X. Indemnity

The Agency shall hold the Federal Government and the State harmless from and shall process and defend at its own expense all claims, demands, or suits, whether at law or equity brought against the Agency, State, or Federal Government, arising from the Agency's execution, performance, or failure to perform any of the provisions of this agreement, or of any other agreement or contract connected with this agreement, or arising by reason of the participation of the State or Federal Government in the project, PROVIDED, nothing herein shall require the Agency to reimburse the State or the Federal Government for damages arising out of bodily injury to persons or damage to property caused by or resulting from the sole negligence of the Federal Government or the State.

No liability shall attach to the State or Federal Government except as expressly provided herein.

XI. Nondiscrimination Provision

The Agency hereby agrees that it will incorporate or cause to be incorporated into any contract for construction work, or modification thereof, as defined in the rules and regulations of the Secretary of Labor at 41 CFR Chapter 60, which is paid for in whole or in part with funds obtained from the Federal Government or borrowed on the credit of the Federal Government pursuant to a grant, contract, loan, insurance, or guarantee or understanding pursuant to any federal program involving such grant, contract, loan, insurance, or guarantee, the following equal opportunity clause:

"DURING THE PERFORMANCE OF THIS CONTRACT, THE CONTRACTOR AGREES AS FOLLOWS:"

(a) The contractor will not discriminate against any employee or applicant for employment because of race, color, religion, sex, or national origin. The contractor will take affirmative action to ensure that applicants are employed and that employees are treated during employment without regard to their race, color, religion, sex, or national origin. Such action shall include, but not be limited to, the following: employment, upgrading, demotion or transfer; recruitment or recruitment advertising; layoffs or termination; rates of pay or other forms of compensation, and selection for training, including apprenticeship. The contractor agrees to post in conspicuous places, available to employees and applicants for employment, notices to be provided by the Agency setting forth the provisions of this nondiscrimination clause.

(b) The contractor will, in all solicitations or advertisements for employees placed by or on behalf of the contractor, state that all qualified applicants will receive consideration for employment without regard to race, color, religion, sex or national origin.

(c) The contractor will send to each labor union or representative of workers with which he has a collective bargaining agreement or other contract or understanding, a notice to be provided by the Agency advising the said labor union or workers' representative of the contractor's commitments under this Section 11-2 and shall post copies of the notice in conspicuous places available to employees and applicants for employment.

(d) The contractor will comply with all provisions of Executive Order 11246 of September 24, 1965, and of the rules, regulations, and relevant orders of the Secretary of Labor.

(e) The contractor will furnish all information and reports required by Executive Order 11246 of September 24, 1965, and by the rules and regulations and orders of the Secretary of Labor, or pursuant thereto, and will permit access to his books, records, and accounts by the Federal Highway Administration and the Secretary of Labor for purposes of investigation to ascertain compliance with such rules, regulations, and orders.

(f) In the event of the contractor's noncompliance with the nondiscrimination clauses of this contract or with any of such rules, regulations or orders, this contract may be canceled, terminated, or suspended in whole or in part and the contractor may be declared ineligible for further government contracts or federally assisted construction contracts in accordance with procedures authorized in Executive Order 11246 of September 24, 1965, and such other sanctions may be imposed and remedies invoked as provided in Executive Order 11246 of September 24, 1965, or by rule, regulation, or order of the Secretary of Labor, or as otherwise provided by law.

(g) The contractor will include the provisions of this Section 11-2 in every subcontract or purchase order unless exempted by rules, regulations, or orders of the Secretary of Labor issued pursuant to Section 204 of Executive Order 11246 of September 24, 1965, so that such provisions will be binding upon each subcontractor or vendor. The contractor will take such action with respect to any subcontract or purchase order as the Agency, Washington State Department of Transportation, or Federal Highway Administration may direct as a means of enforcing such provisions including sanctions for noncompliance: Provided, however, that in the event a contractor becomes involved in, or is threatened with, litigation with a subcontractor, he may request the United States to enter into such litigation to protect the interests of the United States.

The Agency further agrees that it will be bound by the above equal opportunity clause with respect to its own employment practices when it participates in federally assisted construction work: Provided, that if the applicant so participating is a State or Local Government, the above equal opportunity clause is not applicable to any agency, instrumentality, or subdivision of such government which does not participate in work on or under the contract.

The Agency also agrees:

(1) To assist and cooperate actively with the State in obtaining the compliance of contractors and subcontractors with the equal opportunity clause and rules, regulations, and relevant orders of the Secretary of Labor.

(2) To furnish the State such information as it may require for the supervision of such compliance and that it will otherwise assist the State in the discharge of its primary responsibility for securing compliance.

(3) To refrain from entering into any contract or contract modification subject to Executive Order, 11246 of September 24, 1965, with a contractor debarred from, or who has not demonstrated eligibility for, government contracts and federally assisted construction contracts pursuant to the Executive Order.

(4) To carry out such sanctions and penalties for violation of the equal opportunity clause as may be imposed upon contractors and subcontractors by the State, Federal Highway Administration, or the Secretary of Labor pursuant to Part II, subpart D of the Executive Order.

In addition, the Agency agrees that if it fails or refuses to comply with these undertakings, the State may take any or all of the following actions:

(a) Cancel, terminate, or suspend this agreement in whole or in part;

(b) Refrain from extending any further assistance to the Agency under the program with respect to which the failure or refusal occurred until satisfactory assurance of future compliance has been received from the Agency; and

(c) Refer the case to the Department of Justice for appropriate legal proceedings.

XII. Liquidated Damages

The Agency hereby agrees that the liquidated damages provisions of 23 CFR Part 630, Subpart 305, as supplemented, relative to the amount of Federal participation in the project cost, shall be applicable in the event the contractor fails to complete the contract within the contract time. Failure to include liquidated damages provision will not relieve the Agency from reduction of federal participation in accordance with this paragraph.

XIII. Termination for Public Convenience

The Secretary of the Washington State Department of Transportation may terminate the contract in whole, or from time to time in part, whenever:

(1) The requisite federal funding becomes unavailable through failure of appropriation or otherwise.

(2) The contractor is prevented from proceeding with the work as a direct result of an Executive Order of the President with respect to the prosecution of war or in the interest of national defense, or an Executive Order of the President or Governor of the State with respec to the preservation of energy resources.

(3) The contractor is prevented from proceeding with the work by reason of a preliminary, special, or permanent restraining order of a court of competent jurisdiction where the issuance of such order is primarily caused by the acts or omissions of persons or agencies othei than the contractor.

(4) The Secretary determines that such termination is in the best interests of the State.

XIV. Venue for Claims and/or Causes of Action

For the convenience of the parties to this contract, it is agreed that any claims and/or causes of action which the Local Agency has against the State of Washington, growing out of this contract or the project with which it is concerned, shall be brought only in the Superior Court for Thurston County.

Additional Provisions

.01 Agency Name and Billing Address. Enter the Agency of primary interest which will become a party to the agreement.

.02 Federal Aid Project Number. Leave blank. This number will be assigned by WSDOT.

.03 Agreement Number. Leave blank. This number will be assigned by WSDOT.

.04 Project Description. Enter the project name, total length of the project, and a brief description of the termini.
Example: (Name) Regal Road; (Length) 0.84 km (0.52 miles); (Termini) Tuscan Road to approx. 76.2 m (250 feet) south of Michan Road.

Below "Description of Work," enter a brief outline of the major items of work to be performed. Examples: (a) "Widening, channelization, curbs, gutters, illumination, and traffic signals." (b) "Right-of-way will be acquired by Agency forces."

.05 Type of Work and Funding.

a. PE. Lines a through d show Preliminary Engineering costs for the project by type of work.

Line a — Enter the estimated amount of agency PE in columns 1 through 3.

Line b — Identify user, consultant, etc., and enter the estimated amounts in columns 1 through 3.

Line c — State Services. Every project must have funding for state services. Secure an estimate from the Regional TransAid Engineer and enter in columns 1 through 3.

Line d — Total of lines a + b + c.

b. Right-of-Way. If Right-of-Way is acquired on the project, the appropriate costs are shown in lines e through h.

Line e — Enter the estimated amount of property and acquisition costs in columns 1 through 3.

Line f — Identify user, consultant, etc., and enter the estimated amounts in columns 1 through 3.

Line g — State Services. If state services are required in the acquisition, enter the estimated amounts in columns 1 through 3.

Line h — Total of lines e + f + g.

c. Construction. Lines i through m show construction costs for type of work. Lines n through q show construction engineering costs by agencies involved.

Line i — Enter the estimated cost of the contract.

Lines j, k, & l — Identify other contracts such as agency force, agency supplied materials, etc., and enter the estimated cost.

Line m — Total of lines i + j + k + l.

Line n — Agency construction engineering, enter estimated costs.

Line o — Other construction engineering, record the name of the other agency involved (consultant, etc.) and enter the estimated cost in columns 1 through 3.

Line p — State force. Every project must have funds set up for state force work. Contact the Regional TransAid Engineer for an estimate and record in columns 1 through 3.

Line q — Total Construction Engineering (lines n + o + q). This line is limited to 15 percent of line m.

Line r — Total Construction Cost Estimate. Total of lines m + q.

Line s — Total Cost Estimate of the Project. Total of lines d + h + r.

d. Insert the federal aid participation rate appropriate for the project in the space provided below column 3.

Please remember, if the federal aid participation rate entered is not the full amount allowed by FHWA, then the participation rate entered becomes the maximum amount allowed.

.06 Method of Construction Financing. Choose the method of financing the construction portion of the project.

a. Method "A" is used when the state administers the contract for the agency. At the time of contract award, the state will direct the agency to deposit with the state an advance in the amount of the agency's share of the total construction costs (based on the actual contract award rather than the amount listed in the agreement). If this works a hardship on the agency, a smaller sum may be negotiated through the Regional TransAid Engineer.

b. Method "B" is also used when the state administers the contract for the agency. At the time of award, the state will notify the agency that withholding of its monthly fuel-tax allotments is to commence in accordance with the terms specified on the face of the agreement. The agency will specify the number of months over which allotments will be withheld. This period is not to exceed the length of the construction phase of the project. The monthly withholding amount is calculated by dividing the number of months into the total construction cost of the project entered in Column 2, line "o" of the ESTIMATE OF FUNDING box.

c. Method "C" is used with projects administered by the local agency. The agency may pay all costs on the project pending federal reimbursement, or submit billings through the state to FHWA for all eligible costs. The billings must document the payment requests from the contractor. If state-force work, such as audit and construction engineering, is to receive federal participation, it will be billed to the agency and FHWA simultaneously at the indicated ratio.

.07 Resolutions/Ordinances. When someone other than the County Executive/Chairman, County Commissioners/Mayor is authorized to sign the agreement, the agency must submit to WSDOT with the agreement a copy of the Resolution/Ordinance designating that individual.

When using Method "B" for construction financing, the local agency officials must execute a Resolution/Ordinance in the form of Appendix 22.45 authorizing the withholding of funds from the monthly fuel-tax distribution. The Local Agency Agreement becomes the Resolution/Ordinance which specifies the amount and the months of withholding. Submit a copy of this Resolution/Ordinance with the agreement.

.08 Parties to the Agreement. Submit one originally signed agreement form to the Regional TransAid Engineer. It is the responsibility of the local agency to submit an additional agreement form or a copy if they need an executed agreement for their files. The agreement is first executed by the agency official(s) authorized to enter into the agreement. It is then transmitted to the state for execution by the Assistant Secretary for TransAid. The agreement is dated at the time of final execution by the Department. A fully-executed agreement will be returned to the local agency.

12:P:LAGB

AGENCY MASON COUNTY DEPT. OF PUBLIC WORKS DATE	**WASHINGTON STATE DEPARTMENT OF TRANSPORTATION LOCAL AGENCY AGREEMENT** **SUPPLEMENT NO.**	FEDERAL AID PROJECT NUMBER BROS - 2023(016) AGREEMENT NUMBER

The Local Agency of MASON desires to supplement the agreement entered into and executed on 02-03-93 as identified above. All provisions in the basic agreement remain in effect except as expressly modified by this supplement.
The changes to the agreement are described as follows:

PROJECT DESCRIPTION

Name PLUG MILL BRIDGE - 02310-0.04 Length 0.17

Termini Mile Post 0.00 to Mile Post 0.17 - PLUG MILL ROAD

Description of Work : Build a new prestressed flat slab concrete bridge. The major items of work include removal of the existing bridge and constructing a new bridge, including guardrails and approach work.

Reason for Supplement

Request additional Preliminary Engineering Funding to cover actual costs.
Request construction funding.
Change termini from Mile Post 0.00 - 0.12 to Mile Post 0.00 - 0.17.

TYPE OF WORK	ESTIMATE OF FUNDING				
	(1) PREVIOUS AGREEMENT/ SUPPLEMENT	(2) SUPPLEMENT	(3) ESTIMATED TOTAL PROJECT FUNDS	(4) ESTIMATED AGENCY FUNDS	(5) ESTIMATED FEDERAL FUNDS
P.E. a. Agency Work	2,000		2,000	400	1,600
b. Other CONSULTANT	7,500	8,000	15,500	3,100	12,400
c. State Services	500		500	100	400
d. Total PE Cost Estimate (a+b+c)	10,000	8,000	18,000	3,600	14,400
Right-of-Way					
e. Agency Work					
f. Other					
g. State Services					
h. Total R/W Cost Estimate (e+f+g)					
Construction					
i. Contract		97,000	97,000	19,400	77,600
j. Other					
k. Other					
l. Other					
m. Total Contract Costs (i+j+k+l)		97,000	97,000	19,400	77,600
Construction Engineering					
n. Agency		3,900	3,900	780	3,120
o. Other					
p. State Forces		1,100	1,100	220	880
q. Total Const. Engineering (n+o+p)		5,000	5,000	1,000	* 4,000
r. Total Const. Cost Estimate (m+q)		102,000	102,000	20,400	81,600
s. **TOTAL COST ESTIMATE OF THE PROJECT** (d+h+r)		110,000	120,000	24,000	96,000

* Federal participation in Construction Engineering (q) is limited to 15% of the Total Contract Costs. (line m, column 5)

The local agency further stipulates that pursuant to said Title 23, regulations and policies and procedures, and as a condition to payment of the Federal funds obligated, it accepts and will comply with the applicable provisions.

AGENCY OFFICIAL

By M. R. Fairchild
CHAIRMAN, County Commissioners or MAYOR

WASHINGTON STATE
DEPARTMENT OF TRANSPORTATION

By: _____
Assistant Secretary for Local Programs

Date Executed

DOT 140-041
Revised 1/94

.01 Agency. Enter the agency name as entered on the original agreement.

.02 Date. Leave blank. This date will be filled in by WSDOT.

.03 Supplemental Number. Enter the number of the supplement. Supplement numbers will be assigned in sequence beginning with Number 1 for the first supplement.

.04 Project Number. Enter the federal aid project number assigned by WSDOT on the original agreement.

.05 Agreement Number. Enter the agreement number assigned by WSDOT on the original agreement.

.06 Project Description. Enter the project name, length, and termini.

.07 Description of Work. Clearly describe if there is a change in work. If the work has not changed, enter "No Change."

.08 Reason for Supplement. Also enter the reason for this supplement, i.e., increase PE funding to cover design changes presented in the revised prospectus; request funding of construction phase; decrease construction funding to the contract bid amount, etc.

.09 Type of Work and Funding. Complete this section in the manner described in Appendix 22.42, Paragraph .05.

a. Column 1 — Enter the amounts from column 1 of the original city/county agreement. If the agreement has already been supplemented, enter the amounts from column 3 of the latest supplemental agreement.

b. Column 2 — Enter additional amounts requested.

c. Column 3 — Add the amounts in columns 1 and 2.

d. Columns 4 and 5 — Enter the appropriate amounts based on the participation ratio recorded on the original agreement.

.10 Signatures. An authorized official of the local agency should sign the Supplemental Agreement. An agency staff member executing a Supplemental Agreement will cross out the words "Chairman, County Commissioners/Mayor" in the agency signature block, and write in his/her title.

14:P:LAG2b

ORDINANCE/RESOLUTION NO. _____

WHEREAS, under and by the virtue of the terms of that certain Agreement and entered into by and between the Local Agency of _____, hereinafter designated as the "LOCAL AGENCY" and the State of Washington, acting through its Department of Transportation and the Secretary thereof, under the date of _____, 19 _____, the State will act as agent for the LOCAL AGENCY in the participation of said LOCAL AGENCY with the Federal Highway Administration under the provisions of the Federal-aid Highway Title 23 United States Code for the construction of Federal-aid Project No. _____, copy of which Agreement is hereunto attached, now referred to and by such reference incorporated herein and made a part hereof, now, therefore,

BE IT HEREBY RESOLVED that said Agreement be and the same is hereby ratified and approved; and

BE IT FURTHER RESOLVED that authorization is hereby granted for the reservation of amount of _____ Dollars ($ _____) from monthly fuel tax allotments, being an amount not in excess of the money reasonably anticipated to accrue to the LOCAL AGENCY in the Motor Vehicle Fund during the current or future biennium(s) as the balance of the estimated participating share and costs of the LOCAL AGENCY in the above mentioned project, for the use of the Secretary of Transportation to defray the costs incurred in the performance of the aforesaid requested work; and upon completion of the aforesaid work, payment having been made therefor, and a statement having been furnished to the LOCAL AGENCY, authorization is made to release to the LOCAL AGENCY any unexpected balance of the amount reserved by this Ordinance/Resolution.

BE IT FURTHER RESOLVED that the (Director of Public Works, Local Agency Engineer, other Agency official) is hereby authorized to establish the months in which the withholding shall take place and the exact amount to be withheld each month up to _____ percent over the amount indicated for construction in this Agreement as determined by open competitive bidding, at contract award.

Dated this _____ day of _____, 19 _____.

_____

_____

_____

(SEAL)

Attest:

_____

_____ Clerk

Washington State
Department of Transportation

Local Agency Agreement

Agency _____

Address _____

_____

Project No. _____

Agreement No. _____

For Headquarters WSDOT use only.

The Local Agency having complied, or hereby agreeing to comply, with the terms and conditions set forth in (1) Title 23, U.S. Code Highways, (2) the regulations issued pursuant thereto, (3) Office of Management and Budget Circulars A-102 and A-128, (4) the policies and procedures promulgated by the Washington State Department of Transportation, and (5) the federal aid project agreement entered into between the State and Federal Government, relative to the above project, the Washington State Department of Transportation will authorize the Local Agency to proceed on the project by a separate notification. Federal funds which are to be obligated for the project may not exceed the amount shown herein on line s, column 3, without written authority by the State, subject to the approval of the Federal Highway Administration. All project costs not reimbursed by the Federal Government shall be the responsibility of the Local Agency.

Project Description

Name _____ Length _____

Termini _____

Description of Work

Type of Work		Estimate of Funding		
		(1) Estimated Total Project Funds	(2) Estimated Agency Funds	(3) Estimated Federal Funds
PE	a. Agency work			
	b. Other _____			
	c. State services			
	d. Total PE cost estimate (a+b+c)			
Right of Way	e. Agency work			
	f. Other _____			
	g. State services			
	h. Total R/W cost estimate (e+f+g)			
Construction	i. Contract			
	j. Other _____			
	k. Other _____			
	l. Other _____			
	m. Total contract costs (i+j+k+l)			
	Construction Engineering			
	n. Agency			
	o. Other _____			
	p. State forces			
	q. Total construction engineering (n+o+p)			*
	r. Total construction cost Estimate (m+q)			
	s. **Total cost estimate of the project** (d+h+r)			

***Federal participation in construction engineering (q) is limited to 15 percent of the total contract costs (line m, column 3).**

The federal aid participation rate in this project will be determined by the Federal Government. The parties expect that it will be _____ percent; however, it is understood that the rate may vary. The Local Agency agrees that this agreement is entered into without relying upon any representation by the state made outside of this contract, or contained herein, as to what the federal participation rate will be. It further agrees that it will not condition any future actions with respect to the project covered by this agreement upon past, current, or future representations as to the federal participation rate. The dollar amount of federal participation cannot exceed the amount shown in line s, column 3. All costs not reimbursed by the Federal Government shall be the responsibility of the Local Agency.

Construction Method of Financing

(check method selected)

State Ad and Award

❒ Method A — Advance Payment — Agency share of total construction cost (based on contract award)

❒ Method B — Withhold from gas tax the Agency's share of total construction cost (line 4, column 2) in the amount of

$ _____ at $ _____ per month for _____ months

Local Force or Local Ad and Award

❒ Method C — Agency cost incurred with partial reimbursement

The Local Agency further stipulates that pursuant to said Title 23, regulations and policies and procedures, and as a condition to payment of the federal funds obligated, it accepts and will comply with the applicable provisions set forth below. Adopted by official action on_____, 19_____, Resolution / Ordinance No. _____.

Agency Official

By _____

_____

_____

Washington State Department of Transportation

By _____
Assistant Secretary for TransAid

Date Executed _____

Provisions

I. Scope of Work

The Agency shall provide all the work, labor, materials, and services necessary to perform the project which is described and set forth in detail in the "Project Description" and "Type of Work."

When the State acts for and on behalf of the Agency, the State shall be deemed an agent of the Agency and shall perform the services described and indicated in "Type of Work" on the face of this agreement, in accordance with plans and specifications as proposed by the Agency and approved by the State and the Federal Highway Administration.

When the State acts for the Agency but is not subject to the right of control by the Agency, the State shall have the right to perform the work subject to the ordinary procedures of the State and Federal Highway Administration.

II. Delegation of Authority

The State is willing to fulfill the responsibilities to the Federal Government by the administration of this project. The Agency agrees that the State shall have the full authority to carry out this administration. The State shall review, process, and approve documents required for federal aid reimbursement in accordance with federal requirements. If the State advertises and awards the contract, the State will further act for the Agency in all matters concerning the project as requested by the Agency. If the Local Agency advertises and awards the project, the State shall review the work to ensure conformity with the approved plans and specifications.

III. Project Administration

Certain types of work and services shall be provided by the State on this project as requested by the Agency and described in the Type of Work above. In addition, the State will furnish qualified personnel for the supervision and inspection of the work in progress. On Local Agency advertised and awarded projects, the supervision and inspection shall be limited to ensuring all work is in conformance with approved plans, specifications, and federal aid requirements. The salary of such engineer or other supervisor and all other salaries and costs incurred by State forces upon the project will be considered a cost thereof. All costs related to this project incurred by employees of the State in the customary manner on highway payrolls and vouchers shall be charged as costs of the project.

IV. Availability of Records

All project records in support of all costs incurred and actual expenditures kept by the Agency are to be maintained in accordance with procedures prescribed by the Division of Municipal Corporations of the State Auditor's Office, the U.S. Department of Transportation, and the Washington State Department of Transportation. The records shall be open to inspection by the State and Federal Government at all reasonable times and shall be retained and made available for such inspection for a period of not less than three years from the final payment of any federal aid funds to the Agency. Copies of said records shall be furnished to the State and / or Federal Government upon request.

V. Compliance with Provisions

The Agency shall not incur any federal aid participation costs on any classification of work on this project until authorized in writing by the State for each classification. The classifications of work for projects are:

1. Preliminary engineering up to and including approval.
2. Preparation of plans, specifications, and estimates.
3. Right of way acquisition.
4. Project construction.

In the event that right of way acquisition, or actual construction of the road, for which preliminary engineering is undertaken is not started by the closing of the tenth fiscal year following the fiscal year in which the agreement is executed, the Agency will repay to the State the sum or sums of federal funds paid to the Agency under the terms of this agreement (see Section VIII).

The Agency agrees that all stages of construction necessary to provide the initially planned complete facility within the limits of this project will conform to at least the minimum values set by approved statewide design standards applicable to this class of highways, even though such additional work is financed without federal aid participation.

The Agency agrees that on federal aid highway construction projects, the current federal aid regulations which apply to liquidated damages relative to the basis of federal participation in the project cost shall be applicable in the event the contractor fails to complete the contract within the contract time.

VI. Payment and Partial Reimbursement

The total cost of the project, including all review and engineering costs and other expenses of the State, is to be paid by the Agency and by the Federal Government. Federal funding shall be in accord with the Intermodal Surface Transportation Efficiency Act 1991, Title 23, United States Code, as amended, and Office of Management and Budget circulars A-102 and A-128. The State shall not be ultimately responsible for any of the costs of the project. The Agency shall be ultimately responsible for all costs associated with the project which are not reimbursed by the Federal Government. Nothing in this agreement shall be construed as a promise by the State as to the amount or nature of federal participation in this project.

1. Preliminary Engineering, Right of Way Acquisition, and Audit Costs

The Agency will pay for Agency incurred costs on the project. Following such payments, vouchers shall be submitted to the State in the format prescribed by the State, in quadruplicate, not more than one per month. The State will reimburse the Agency up to the

amount shown on the face of this agreement for those costs eligible for federal participation to the extent that such costs are directly attributable and properly allocable to this project. Expenditures by the Local Agency for the establishment, maintenance, general administration, supervision, and other overhead shall not be eligible for federal participation.

The State will pay for State incurred costs on the project. Following payment, the State shall bill the Federal Government for reimbursement of those costs eligible for federal participation to the extent that such costs are attributable and properly allocable to this project. The State shall bill the Agency for that portion of State costs which were not reimbursed by the Federal Government (see Section VIII).

2. Project Construction Costs

Project construction financing will be accomplished by one of the three methods as indicated in this agreement.

Method A – The Agency will place with the State, within (20) days after the execution of the construction contract, an advance in the amount of the Agency's share of the total construction cost based on the contract award. The State will notify the Agency of the exact amount to be deposited with the State. The State will pay all costs incurred under the contract upon presentation of progress billings from the contractor. Following such payments, the State will submit a billing to the Federal Government for the federal aid participation share of the cost. When the project is substantially completed and final actual costs of the project can be determined, the State will present the Agency with a final billing showing the amount due the State or the amount due the Agency. This billing will be cleared by either a payment from the Agency to the State or by a refund from the State to the Agency.

Method B – The Agency's share of the total construction cost as shown on the face of this agreement shall be withheld from its monthly fuel tax allotments. The face of this agreement establishes the months in which the withholding shall take place and the exact amount to be withheld each month. The extent of withholding will be confirmed by letter from the State at the time of contract award. Upon receipt of progress billings from the contractor, the State will submit such billings to the Federal Government for payment of its participating portion of such billings.

Method C – The Agency may submit vouchers to the State in the format prescribed by the State, in quadruplicate, not more than once per month for those costs eligible for Federal participation to the extent that such costs are directly attributable and properly allocable to this project. Expenditures by the Local Agency for the establishment, maintenance, general administration, supervision, and other overhead shall not be eligible for Federal participation.

The State shall reimburse the Agency for the Federal share of eligible project costs up to the amount shown on the face of this agreement. At the time of audit, the Agency will provide documentation of all costs incurred on the project.

The State shall bill the Agency for all costs incurred by the State relative to the project. The State shall also bill the Agency for the federal funds paid by the State to the Agency for project costs which are subsequently determined to be ineligible for federal participation (see Section VIII).

VII. Audit of Federal Aid Project

The Agency, if services of a consultant are required, shall be responsible for audit of the consultant's records to determine eligible federal aid costs on the project. The report of said audit shall be in the Agency's files and made available to the State and the Federal Government.

An audit shall be conducted by the WSDOT Internal Audit Office in accordance with generally accepted governmental auditing standards as issued by the United States General Accounting Office by the Comptroller General of the United States; WSDOT Directive D27-50, Consultant Authorization, Selection, and Agreement Administration; memoranda of understanding between WSDOT and FHWA; and Office of Management and Budget Circular A-128.

If upon audit it is found that overpayment or participation of federal money in ineligible items of cost has occurred, the Agency shall reimburse the State for the amount of such overpayment or excess participation (see Section VIII).

VIII. Payment of Billing

The Agency agrees that if payment or arrangement for payment of any of the State's billing relative to the project (e.g., State force work, project cancellation, overpayment, cost ineligible for federal participation, etc.) is not made to the State within 45 days after the Agency has been billed, the State shall effect reimbursement of the total sum due from the regular monthly fuel tax allotments to the Agency from the Motor Vehicle Fund. No additional Federal project funding will be approved until full payment is received unless otherwise directed by the Assistant Secretary for TransAid.

IX. Traffic Control, Signing, Marking, and Roadway Maintenance

The Agency will not permit any changes to be made in the provisions for parking regulations and traffic control on this project without prior approval of the State and Federal Highway Administration. The Agency will not install or permit to be installed any signs, signals, or markings not in conformance with the standards approved by the Federal Highway Administration and MUTCD. The Agency will, at its own expense, maintain the improvement covered by this agreement.

X. Indemnity

The Agency shall hold the Federal Government and the State harmless from and shall process and defend at its own expense all claims, demands, or suits, whether at law or equity brought against the Agency, State, or Federal Government, arising from the Agency's execution, performance, or failure to perform any of the provisions of this agreement, or of any other agreement or contract connected with this agreement, or arising by reason of the participation of the State or Federal Government in the project, PROVIDED, nothing herein shall require the Agency to reimburse the State or the Federal Government for damages arising out of bodily injury to persons or damage to property caused by or resulting from the sole negligence of the Federal Government or the State.

No liability shall attach to the State or Federal Government except as expressly provided herein.

XI. Nondiscrimination Provision

The Agency hereby agrees that it will incorporate or cause to be incorporated into any contract for construction work, or modification thereof, as defined in the rules and regulations of the Secretary of Labor at 41 CFR Chapter 60, which is paid for in whole or in part with funds obtained from the Federal Government or borrowed on the credit of the Federal Government pursuant to a grant, contract, loan, insurance, or guarantee or understanding pursuant to any federal program involving such grant, contract, loan, insurance, or guarantee, the following equal opportunity clause:

"DURING THE PERFORMANCE OF THIS CONTRACT, THE CONTRACTOR AGREES AS FOLLOWS:"

(a) The contractor will not discriminate against any employee or applicant for employment because of race, color, religion, sex, or national origin. The contractor will take affirmative action to ensure that applicants are employed and that employees are treated during employment without regard to their race, color, religion, sex, or national origin. Such action shall include, but not be limited to, the following: employment, upgrading, demotion or transfer; recruitment or recruitment advertising; layoffs or termination; rates of pay or other forms of compensation, and selection for training, including apprenticeship. The contractor agrees to post in conspicuous places, available to employees and applicants for employment, notices to be provided by the Agency setting forth the provisions of this nondiscrimination clause.

(b) The contractor will, in all solicitations or advertisements for employees placed by or on behalf of the contractor, state that all qualified applicants will receive consideration for employment without regard to race, color, religion, sex or national origin.

(c) The contractor will send to each labor union or representative of workers with which he has a collective bargaining agreement or other contract or understanding, a notice to be provided by the Agency advising the said labor union or workers' representative of the contractor's commitments under this Section 11-2 and shall post copies of the notice in conspicuous places available to employees and applicants for employment.

(d) The contractor will comply with all provisions of Executive Order 11246 of September 24, 1965, and of the rules, regulations, and relevant orders of the Secretary of Labor.

(e) The contractor will furnish all information and reports required by Executive Order 11246 of September 24, 1965, and by the rules and regulations and orders of the Secretary of Labor, or pursuant thereto, and will permit access to his books, records, and accounts by the Federal Highway Administration and the Secretary of

Labor for purposes of investigation to ascertain compliance with such rules, regulations, and orders.

(f) In the event of the contractor's noncompliance with the nondiscrimination clauses of this contract or with any of such rules, regulations or orders, this contract may be canceled, terminated, or suspended in whole or in part and the contractor may be declared ineligible for further government contracts or federally assisted construction contracts in accordance with procedures authorized in Executive Order 11246 of September 24, 1965, and such other sanctions may be imposed and remedies invoked as provided in Executive Order 11246 of September 24, 1965, or by rule, regulation, or order of the Secretary of Labor, or as otherwise provided by law.

(g) The contractor will include the provisions of this Section 11-2 in every subcontract or purchase order unless exempted by rules, regulations, or orders of the Secretary of Labor issued pursuant to Section 204 of Executive Order 11246 of September 24, 1965, so that such provisions will be binding upon each subcontractor or vendor. The contractor will take such action with respect to any subcontract or purchase order as the Agency, Washington State Department of Transportation, or Federal Highway Administration may direct as a means of enforcing such provisions including sanctions for noncompliance: Provided, however, that in the event a contractor becomes involved in, or is threatened with, litigation with a subcontractor, he may request the United States to enter into such litigation to protect the interests of the United States.

The Agency further agrees that it will be bound by the above equal opportunity clause with respect to its own employment practices when it participates in federally assisted construction work: Provided, that if the applicant so participating is a State or Local Government, the above equal opportunity clause is not applicable to any agency, instrumentality, or subdivision of such government which does not participate in work on or under the contract.

The Agency also agrees:

(1) To assist and cooperate actively with the State in obtaining the compliance of contractors and subcontractors with the equal opportunity clause and rules, regulations, and relevant orders of the Secretary of Labor.

(2) To furnish the State such information as it may require for the supervision of such compliance and that it will otherwise assist the State in the discharge of its primary responsibility for securing compliance.

(3) To refrain from entering into any contract or contract modification subject to Executive Order, 11246 of September 24, 1965, with a contractor debarred from, or who has not demonstrated eligibility for, government contracts and federally assisted construction contracts pursuant to the Executive Order.

(4) To carry out such sanctions and penalties for violation of the equal opportunity clause as may be imposed upon contractors and subcontractors by the State, Federal Highway Administration, or the Secretary of Labor pursuant to Part II, subpart D of the Executive Order.

In addition, the Agency agrees that if it fails or refuses to comply with these undertakings, the State may take any or all of the following actions:

(a) Cancel, terminate, or suspend this agreement in whole or in part;

(b) Refrain from extending any further assistance to the Agency under the program with respect to which the failure or refusal occurred until satisfactory assurance of future compliance has been received from the Agency; and

(c) Refer the case to the Department of Justice for appropriate legal proceedings.

XII. Liquidated Damages

The Agency hereby agrees that the liquidated damages provisions of 23 CFR Part 630, Subpart 305, as supplemented, relative to the amount of Federal participation in the project cost, shall be applicable in the event the contractor fails to complete the contract within the contract time. Failure to include liquidated damages provision will not relieve the Agency from reduction of federal participation in accordance with this paragraph.

XIII. Termination for Public Convenience

The Secretary of the Washington State Department of Transportation may terminate the contract in whole, or from time to time in part, whenever:

(1) The requisite federal funding becomes unavailable through failure of appropriation or otherwise.

(2) The contractor is prevented from proceeding with the work as a direct result of an Executive Order of the President with respect to the prosecution of war or in the interest of national defense, or an Executive Order of the President or Governor of the State with respect to the preservation of energy resources.

(3) The contractor is prevented from proceeding with the work by reason of a preliminary, special, or permanent restraining order of a court of competent jurisdiction where the issuance of such order is primarily caused by the acts or omissions of persons or agencies other than the contractor.

(4) The Secretary determines that such termination is in the best interests of the State.

XIV. Venue for Claims and/or Causes of Action

For the convenience of the parties to this contract, it is agreed that any claims and/or causes of action which the Local Agency has against the State of Washington, growing out of this contract or the project with which it is concerned, shall be brought only in the Superior Court for Thurston County.

XV. Certification Regarding the Restrictions of the Use of Federal Funds for Lobbying

The approving authority certifies, to the best of his or her knowledge and belief, that:

(1) No federal appropriated funds have been paid or will be paid, by or on behalf of the undersigned, to any person for influencing or attempting to influence an officer or employee of any federal agency, a member of Congress, an officer or employee of Congress, or an employee of a member of Congress in connection with the awarding of any federal contract, the making of any federal grant, the making of any federal loan, the entering into of any cooperative agreement, and the extension, continuation, renewal, amendment, or modification of any federal contract, grant, loan, or cooperative agreement.

(2) If any funds other than federal appropriated funds have been paid or will be paid to any person for influencing or attempting to influence an officer or employee of any federal agency, a member of Congress, an officer or employee of Congress, or an employee of a member of Congress in connection with this federal contract, grant, loan, or cooperative agreement, the undersigned shall complete and submit the Standard Form-LLL, "Disclosure Form to Report Lobbying," in accordance with its instructions.

(3) The undersigned shall require that the language of this certification be included in the award documents for all subawards at all tiers (including subgrants, and contracts and subcontracts under grants, subgrants, loans, and cooperative agreements) which exceed $100,000, and that all such subrecipients shall certify and disclose accordingly.

This certification is a material representation of fact upon which reliance was placed when this transaction was made or entered into. Submission of this certification as a prerequisite for making or entering into this transaction imposed by Section 1352, Title 31, U.S. Code. Any person who fails to file the required certification shall be subject to a civil penalty of not less than $10,000 and not more than $100,000 for each such failure.

Additional Provisions

Washington State
Department of Transportation

LOCAL AGENCY AGREEMENT

SUPPLEMENT NO. _____

Agency	Federal Aid Project Number
Date	Agreement Number

The Local Agency of _____ desires to supplement the agreement entered into and executed on _____ as identified above. All provisions in the basic agreement remain in effect except as expressly modified by this supplement.
The changes to the agreement are described as follows:

PROJECT DESCRIPTION

Name _____ Length _____

Termini _____

Description of Work

Reason for Supplement

TYPE OF WORK	ESTIMATE OF FUNDING				
	(1) PREVIOUS AGREEMENT/ SUPPLEMENT	(2) SUPPLEMENT	(3) ESTIMATED TOTAL PROJECT FUNDS	(4) ESTIMATED AGENCY FUNDS	(5) ESTIMATED FEDERAL FUNDS
P.E. a. Agency Work					
b. Other _____					
c. State Services					
d. Total PE Cost Estimate (a+b+c)					
Right-of-Way					
e. Agency Work					
f. Other _____					
g. State Services					
h. Total R/W Cost Estimate (e+f+g)					
Construction					
i. Contract					
j. Other _____					
k. Other _____					
l. Other _____					
m. Total Contract Costs (i+j+k+l)					
Construction Engineering					
n. Agency					
o. Other _____					
p. State Forces					
q. Total Const. Engineering (n+o+p)					*
r. Total Const. Cost Estimate (m+q)					
s. TOTAL COST ESTIMATE OF THE PROJECT (d+h+r)					

* Federal participation in Construction Engineering (q) is limited to 15% of the Total Contract Costs. (line m, column 5)

The local agency further stipulates that pursuant to said Title 23, regulations and policies and procedures, and as a condition to payment of the Federal funds obligated, it accepts and will comply with the applicable provisions.

AGENCY OFFICIAL

By: _____
Local Agency Official

_____

_____

WASHINGTON STATE
DEPARTMENT OF TRANSPORTATION

By: _____
Assistant Secretary for TransAid

_____
Date Executed

DOT Form 140-041
Revised 8/95

23.1 General Discussion

All progress billings shall be submitted to the Regional TransAid Engineer by the local agency in accordance with the terms of the Local Agency Agreement (Chapter 22). Billings will not be accepted before the Local Agency Agreement is executed and authorization in writing has been received from the Washington State Department of Transportation (WSDOT).

The execution of the Local Agency Agreement does not constitute approval of federal funds. This authorization from WSDOT is separate from the Local Agency Agreement.

The Local Agency Agreement, when completed, establishes a work order account which permits billing to the project. The Work Order Accounting Plan (WOAP) and the work order ledger may be seen at the region office where the Regional TransAid Engineer can answer questions pertaining to these items.

WSDOT assigns a contract number on all federal aid construction projects. This number identifies the project. It should be used in addition to the federal aid project number when corresponding with WSDOT.

23.2 Billing Procedures for Local Agency Ad and Award and Agency Force Work

Once the Assistant Secretary for TransAid has executed the Local Agency Agreement and WSDOT has given the local agency written authority to proceed, the agency submits progress billings for each phase of work. Any work that is performed before official authorization is received does not qualify for federal participation. Progress billings are submitted as follows:

1. The agency submits a request for payment to the Regional TransAid Engineer in accordance with the Local Agency Agreement.
2. Olympia Service Center TransAid sends Form PPC2 (Appendix 23.61) to the local agency with the original fund authorization letter from TransAid. Subsequent PPC2 forms will be sent as an attachment to the payment voucher.

The form must be completed in accordance with the instruction outlined in Appendix 23.62.

23.3 Billing Procedures for State Ad and Award

Progress billings are submitted as follows:

- Requests for payment from contractors are submitted to the Regional Administrator in accordance with the Local Agency Agreement.
- The requests will be processed in the region using standard WSDOT procedures.

23.4 Number and Timing of Submittals

Progress billings will be numbered sequentially and submitted not more than once per month.

If the billing is prepared properly, payment should normally be received within three weeks of submittal. If payment is not received within one month, the agency should contact the Regional TransAid Engineer.

23.5 Identification of Federal Aid Participating and Nonparticipating Charges

Reimbursement of costs eligible for Federal Highway Administration's (FHWA) participation are provided under Title 23 of the United States Code. The following is an overview of participating and nonparticipating charges by FHWA.

a. Participating (Eligible for Federal Aid). The following criteria must be met for charges to be considered participating when charged directly to a federal aid project:

   - The work must be programmed with FHWA.
   - **The costs must have been incurred after the date of FHWA authorization to proceed with the work.**
   - The costs must be wholly for the benefit of the project being charged, e.g., labor performed directly for that project, supplies used up in the course of a project, etc.

   Examples of federal aid participations follow. This list is not limiting or all-inclusive.

   1. Labor — to design, survey, prepare plans, appraise right-of-way, inspect construction activities, audit agreements, etc. (refer to Section 23.52a).
   2. Travel and Per Diem — of employees involved in any participating activity related to the project (refer to Section 23.52b).
   3. Materials — incorporated into a federally approved project (refer to Section 23.53b-4).
   4. Supplies — purchased and consumed entirely on a federally approved project. Supplies might include: cloth tapes, cylinder molds, drafting supplies, film

including developing and printing, hubs, paint (marking spray), stakes, long distance telephone calls identified by project, royalty on materials, initial or new costs of temporary traffic control devices.

5. Services for material testing, document reproduction, mapping, computer, and equipment usage charges. All of these will be based upon rates set by FHWA.

b. Nonparticipating. For specific projects, the following items are not eligible for federal aid participation:

1. Equipment Purchase and Repair — unless specifically approved by FHWA, e.g., engineering, safety, or office equipment and supplies (refer to Section 23.53b-5).

2. Supplies — purchased and consumed on a number of projects or for the general management or operation of the organizational unit (example would be in maintenance or in administration — signs, small tools, and used temporary traffic control devices.

3. Office Rental — including utilities and telephone service.

4. Labor — for activities not directly related to the project nor programmed with FHWA. Labor activities pertaining to the general operation of an agency are not eligible for federal participating.

5. Travel and Per Diem — of employees performing activities classified as nonparticipating or unrelated to a specific federal aid project.

.51 Participating Functions. Classifications of work programmed with FHWA and eligible for federal aid:

a. Preliminary Engineering. The work of locating and designing, making surveys and maps, sinking test holes, making foundation investigations, preparing plans, specifications and estimates, centerline, right-of-way plan preparation and other related preliminary work and incidental construction staking, to the extent such staking is necessary to review construction plans, and related general engineering preparatory to the letting of a contract for construction. The work may also include traffic counts, studies undertaken to determine traffic demands, holding of public hearings, preparation of right-of-way cost estimates, legal, and other costs incidental to the location and design of a highway project necessitating the acquisition of right-of-way thereon up to but not including the appraisal of individual parcels for acquisition purposes.

These engineering costs are generally incurred prior to the date of construction PS&E approval or the date construction plan changes are completed prior to the beginning of construction. The date of contract award is the cutoff for charging to preliminary engineering.

During the construction phase of a project when a major change takes place that requires additional design or PE effort, the appropriate job can be reopened on a case-by-case basis after approval from FHWA.

Also, any construction staking done in advance of the award should be charged to construction engineering, not PE.

b. Acquisition of Rights-of-Way. The continuation of preparation of right-of-way plans; appraisal for parcel acquisition; review of appraisals; preparation for and trial of condemnation cases; management of properties acquired; furnishing of relocation advisory assistance; and other related labor expenses.

- Excess land (appraised value) including uneconomic remnants.
- Improvements (appraised salvage value).
- Right-of-way acquired after certification by the local agency that right-of-way necessary for a designated federal aid highway project has been acquired.
- Judgments in condemnation cases not appealed when the attorney's closing report indicates a basis for appeal. The amount in excess of the review appraiser's determination of value is nonparticipating.
- Landowners:
  - Attorneys' fees;
  - Witness fees;
  - Expert witness fees; or
  - Similar costs to a landowner based on value of the services rendered to him which are paid by the local agency in connection with acquisition of rights-of-way, regardless of whether such costs are included in court judgments or court costs in litigated condemnation cases, e.g., statutory evaluation allowance.

c. Construction Engineering. The work of supervising construction activities; the inspection of construction and related mechanical aspects (e.g., staking necessary to review construction plans together with those staking activities necessary for the local agency to control construction operations); testing of materials incorporated into construction, checking shop drawings and measurements for and preparations of progress and final estimates, and as-built drawings. Construction engineering costs are generally incurred only after approval of the PS&E, a contract number is issued, and also incurred prior to:

- Completion date of the final contract pay estimate and its submission to the contractor;
- The final date of charges for required material testing; or
- Completion date of the separation of contract cost by code type, location, etc., whichever is applicable to that portion of the construction engineering phase involved.

Construction engineering costs shall not exceed 15 percent of construction costs.

d. Highway Planning. The orderly and continuing assembly and analysis of information about highways, such as the history of highway development and their extent, dimensions and conditions, use, economic and social effects, costs, and future needs.

e. Research and Development. The search for more complete knowledge of the characteristics of the highway system and the translation of the results of research into practice.

f. Administrative Settlement Costs-Contract Claims. Services related to the review and defense of claims against federal aid projects.

g. Miscellaneous Functions. Costs incurred for other activities which are properly attributable to, and for the benefit of, federal aid projects but are not assignable to any of the previously defined functions.

h. Construction Costs for Other Than Contractor Payments.

- Royalty expenses for material furnished by the local agency that are used by the contractor.
- Temporary signs, traffic control labor, traffic control devices, and temporary illumination furnished by the local agency. The initial basic cost of traffic control devices purchased for use on the project is an authorized participating cost. When used items are furnished by the local agency, federal participation will not be requested.
- Striping and pavement marking work performed by local forces.
- Second stage fertilizing by local forces. Application of second-stage seeding and fertilizer, after other work on the project has been completed and the contractor has been released from the contract, is eligible for federal participation.

  All costs for the fertilizer and the application by local forces are carried as below the line expense on the preliminary estimate and will be fully eligible for the appropriate matching federal funds.

- Other Items. Items not identified herein as eligible for federal aid participation, such as construction engineering costs, material furnished by the local agency, work performed by local forces, are eligible for participation in accordance with Sections 23.52 and 23.53 below.

.52 Standards for Selected Items of Costs. The following are standards for determining the allowability of selected items of cost. In general, costs must be reasonable, necessary, and allocable to the specific project. The allowability of the selected items of cost is subject to the general policies and principles stated above.

a. Salaries and Wages.

1. Subject to appropriate authorization requirements, federal funds may participate in the cost of salaries, wages, and related payroll expenses incurred for periods of time public employees are actively engaged, either directly or indirectly, in project-related activities.

2. Salaries, wages, and related payroll expenses of a local agency for maintenance, general administration, supervision and other overhead are not eligible for reimbursement except as provided for in Section 23.52 e 2.

b. Travel and Transportation.

1. Federal funds may participate in the cost of commercial transportation, privately owned automobiles, and per diem or subsistence essential to the prosecution of the project and is performed in accordance with prescribed procedures.

2. Reimbursement may be made for use of privately owned automobiles and per diem or subsistence incurred in conformance with the established reimbursement policy of the local agency.

c. Employee Leave and Holidays.

1. A local agency may claim reimbursement for the costs of leave, e.g., annual, sick, military, jury, etc., that is earned, accounted for, and used in accordance with established procedures. The cost of such leave must be a liability of the local agency, must be equitably distributed to all activities, and the pro rata costs distributed to a federal aid project must be representative of the amount that is earned and accrued while working on the project.

2. Compensatory leave granted by a local agency in lieu of payment of overtime to eligible employees may be claimed for reimbursement if accrued and granted under established policies on a uniform basis. Such leave costs must meet the criteria discussed in paragraph (a) of this section.

3. Costs for other leave of a similar nature which may be peculiar to a specific local agency may also be reimbursed provided it meets the criteria set forth in paragraph (a) of this section.

d. Social Security, Retirement, and Other Payroll Benefits.

1. Federal funds may participate in allocable costs incurred for social security, retirement, group insurance premiums, and similar items applicable to salaries and wages of public employees engaged in work in federal aid projects.

2. The costs for such benefits must be a liability of the local agency and must meet the criteria set forth in paragraph 1 of c above.

e. General Administration and Other Overhead Costs Are Not Allowed.

1. General administration, supervision, and other unallowable overhead costs of a local agency are those considered necessary for the management, supervision, and administrative control of a suitably equipped, staffed, and operational agency. Examples of such unallowable costs may include, but are not limited to, the following types of personnel, related payroll benefit costs, and other administrative or support services (refer to CFR 23,1.11):

- Directors, department heads, legal, accounting, budgeting, personnel, and procurement units.
- Related clerical, secretarial, and other support services for officials and personnel listed immediately above.
- Management, supervision, and administrative overhead costs incurred by other units or departments of the state, local agencies, or governmental organizations.

2. Costs incurred for services rendered by employees generally classified as administrative may, however, be considered eligible for reimbursement for:

- A highway planning unit and a research development unit, in the ratio of time spent on the participating portion of work in the unit to the total unit's working hours; and
- Other operating units if such employees are assigned for specific identifiable periods of time to perform project-related activities in the same manner as other operating personnel.

f. Use of Cost Accumulation Centers and Cost Distribution Methods.

1. Cost accumulation centers, i.e., cost centers, cost pools, or other acceptable cost accumulation methods, may be used to capture related types of costs for later distribution to all projects or other benefiting activities for which work was performed during the accounting period. The accounting and cost distribution procedures must be in accordance with paragraph (2) of this section for types of costs incurred under the following general criteria:

- Salaries, wages, and related payroll benefit costs may be incurred during a payroll accounting period which affects a number of projects and, therefore, may not be easily adaptable to charging directly to individual projects due to such factors as (i) incompatibility of time increments for individual projects; (ii) an inordinate amount of time or an additional number of documents to provide separate project coding; or (iii) a documented reduction of overhead costs in the elimination of processing source and coding required, increased electronic data processing applications, and additional accounting requirements.
- Small cost items may be incurred which affect several projects and would result in a disproportionate amount of time and number of documents for separate project accounting in relation to the amount of costs involved.
- Items of costs may otherwise be eligible for reimbursement but, due to their nature and the small amounts involved, they are not being claimed for reimbursement, since the additional overhead costs required for separate project coding and effective internal controls are not cost beneficial relative to separate project reimbursable amounts.
- Cost items must be directly attributable to and properly allocable to the projects to which they are distributed. They must not lose their identity, i.e., type, amount, purpose for which incurred, whether federally participating, input source, etc.

2. The use of separate cost accumulation centers for comparably related types of costs is a prerequisite to the use of percentages, or other acceptable distribution methods, for cost distribution to benefiting projects or other activities. The accounting procedures and methods of

distribution used must have prior concurrence of the FHWA, be representative of average actual costs, and must assure that (1) costs are uniformly and equitably distributed to all projects and activities for which work was performed during the accounting period irrespective of source of funds, (2) provisions are established for an adequate segregation of costs and separate distribution methods for similarly related types of costs, (3) actual costs and liabilities are fully accounted for and controlled, and (4) that reviews are made periodically, and the rates or other distribution methods are adjusted at least once annually by any over or underdistributed accumulated costs from the cost accumulation center for the preceding accounting period.

3. Percentages representative of average actual costs may be used to distribute leave, social security, and other payroll benefits. Such rates are based on prior cost experience adjusted by anticipated known factors which will affect overall costs during the current year, e.g., scheduled salary increases, changes anticipated in insurance premiums, etc.

g. Audit Expense.

AUTHORITY: 23 U.S.C. 121 and 315; 49 CFR 1.48(b).

SOURCE: 49 FR 45578, Nov. 19, 1984, unless otherwise noted.

Project related audits performed in accordance with generally accepted auditing standards (as modified by the Comptroller General of the United States) and applicable federal laws and regulations are eligible for federal participation.

The local agency may use other state, local public agency, and federal audit organizations as well as licensed or certified public accounting firms to augment its audit force.

Audits performed in accordance with the requirements of 23 CFR Part 12, audits of third party contract costs, and other audits providing assurance that a recipient has complied with FHWA regulations are all considered project related audits. Audits benefiting only nonfederal projects, those performed for local agency management use only, or those serving similar nonfederal purposes are not considered project related.

1. Federal funds may be used to reimburse a local agency for the following types of project related audit costs:
   - Salaries, wages, and related costs paid to public employees in accordance with Section 23.52 a;
   - Payments by the local agency to any federal, state, or local public agency audit organization; and
   - Payments by the local agency to licensed or certified public accounting firms.
2. Audit costs incurred by a local agency shall be equitably distributed to all benefiting parties. The portion of these costs allocated to the Federal Aid Highway Program which are not directly related to a specific project or projects shall be equitably distributed, as a minimum, to the major FHWA funding categories in that state.

h. Administrative Settlement Cost — Contract Claims.

AUTHORITY: 23 U.S.C. 121, 315; 49 CFR 1.48(b); and OMB Circular A-102, Attachment G, Standard 2 (h) and (i).

SOURCE: 44 FR 59233, Oct. 15, 1979, unless otherwise noted.

Administrative settlement costs are costs related to the defense and settlement of contract claims including, but not limited to, salaries of a contracting officer or their authorized representative, attorneys, and/or members of state boards of arbitration, appeals boards, or similar tribunals. These costs are allocable to the findings and determinations of contract claims, but they do not include administrative or overhead costs.

1. Federal funds may participate in administrative settlement costs which are:
   - Incurred after notice of claim;
   - Properly supported;
   - Directly allocable to a specific federal aid or federal project;
   - For employment of special counsel for review and defense of contract claims, when
     (a) Recommended by the State Attorney General or local agency legal counsel; and
     (b) Approved in advance by the FHWA Division Administrator, with advice of FHWA Regional Counsel; and
   - For travel and transportation expenses, if in accord with established policy and practices.
2. No reimbursement shall be made if it is determined by FHWA that there was negligence or wrongdoing of any kind by local agency officials with respect to the claim.

.53 Utility Relocations, Adjustments, and Reimbursement.

a. Eligibility.

1. When requested by the local agency federal funds may participate, at the pro rata share applicable, in an amount actually paid by a local agency for the costs of utility relocations. Federal participation is subject to the provisions of §645.103(d) of 23 CFR and may be made under one or more of the following conditions when:

   - The local agency certifies that the utility has the right of occupancy in its existing location because it holds the fee, an easement, or other real property interest, the damaging or taking of which is compensable in eminent domain;
   - The utility occupies privately or publicly owned land, including public road or street right-of-way, and the local agency certifies that the payment is made pursuant to a law authorizing such payment in conformance with the provisions of 23 U.S.C.123; and/or
   - The utility occupies publicly owned land, including public road and street right-of-way, and is owned by a public agency or political subdivision of the state, and is not required by law or agreement to move at its own expense, and the local agency certifies that it has the legal authority or obligation to make such payments.

2. When the local agency has the authority to participate in project costs, federal funds may not participate in payments made by a political subdivision for relocation of utility facilities when state law prohibits the local agency from making payment for relocation of utility facilities.

3. When the local agency does not have the authority to participate in project costs, federal funds may participate in payments made by a political subdivision for relocation of utility facilities. Such payment may be made when the local agency certifies that the payment is based upon the provisions of this part and does not violate the terms of a use and occupancy agreement, or legal contract, between the utility and the local agency.

4. Federal funds are not eligible to participate in any costs for which the utility contributes or repays the local agency except for utilities owned by the political subdivision on projects which qualify under the provisions of (3) of this part in which case the costs of the utility are considered to be costs of the local agency.

5. The FHWA may deny federal fund participation in any payments made by a local agency for the relocation of utility facilities when such payments do not constitute a suitable basis for federal fund participation under the provisions of Title 23, U.S.C.

6. The rights of any public agency or political subdivision of a state under contract, franchise, or other instrument or agreement with the utility, pertaining to the utility's use and occupancy of publicly owned land, including public road and street right-of-way, shall be considered the rights of the local agency in the absence of state law to the contrary.

7. In lieu of the individual certifications required by a-1, the local agency may file a statement with the FHWA setting forth the conditions under which the local agency will make payments for the relocation of utility facilities. The FHWA may approve federal fund participation in utility relocations proposed by the local agency under the conditions of the statement when the FHWA has made an affirmative finding that such statement and conditions form a suitable basis for federal fund participation under the provisions of 23 U.S.C. 123.

8. Federal funds may not participate in the cost of relocations of utility facilities made solely for the benefit or convenience of a utility, its contractor, or a highway contractor.

9. When the advance installation of new utility facilities crossing or otherwise occupying the proposed right-of-way of a planned highway project is underway, or scheduled to be underway, prior to the time such right-of-way is purchased by or under control of the local agency, arrangements should be made for such facilities to be installed in a manner that will meet the requirements of the planned highway project. Federal funds are eligible to participate in the additional cost incurred by the utility that are attributable to, and in accommodation of, the highway project provided such costs are incurred subsequent to FHWA authorization of the work. Subject to the other provisions of this regulation, federal participation may be approved under the foregoing circumstances when it is demonstrated that the action taken is necessary to protect the public interest and the adjustment of the facility is necessary by reason of the actual construction of the highway project.

10. Federal funds are eligible to participate in the costs of preliminary engineering and allied services for utilities, the acquisition of replacement right-of-way for utilities, and the

physical construction work associated with utility relocations. Such costs must be incurred by or on behalf of a utility after the date the work is included in an approved program and after the FHWA has authorized the local agency to proceed in accordance with 23 CFR 630, Subpart A, Federal Aid Programs Approval and Project Authorization.

b. Cost Development and Reimbursement.

1. Developing and recording costs. All utility relocation costs shall be recorded by means of work orders in accordance with an approved work order system except when another method of developing and recording costs, such as lump-sum agreement, has been approved by the local agency and the FHWA. Except for work done under contracts, the individual and total costs properly reported and recorded in the utility's accounts in accordance with the approved method for developing such costs, or the lump-sum agreement, shall constitute the maximum amount on which federal participation may be based.

   Each utility shall keep its work order system or other approved accounting procedure in such a manner as to show the nature of each addition to or retirement from a facility, the total costs thereof, and the source or sources of cost. Separate work orders may be issued for additions and retirements. Retirements, however, may be included with the construction work order provided that all items relating to retirements shall be kept separately from those relating to construction.

2. Direct labor costs. See Section 23.52 a.

3. Labor surcharges. See Section 23.52 a.

4. Material and supply costs. Materials and supplies, if available, are to be furnished from company stock except that they may be obtained from other sources near the project site when available at a lower cost. When not available from company stock, they may be purchased either under competitive bids or existing continuing contracts under which the lowest available prices are developed. Minor quantities of materials and supplies and proprietary products routinely used in the utility's operation and essential for the maintenance of system compatibility may be excluded from these requirements. The utility shall not be required to change its existing standards for materials used in permanent changes to its facilities. Costs shall be determined as follows:

   - Materials and supplies furnished from company stock shall be billed at the current stock prices for such new or used materials at the time of issue.
   - Materials and supplies not furnished from company stock shall be billed at actual costs to the utility delivered to the project site.
   - A reasonable cost for plant inspection and testing may be included in the costs of materials and supplies when such expense has been incurred. The computation of actual costs of materials and supplies shall include the deduction of all offered discounts, rebates, and allowances.
   - The cost of rehabilitating rather than replacing existing utility facilities to meet the requirements of a project is reimbursable, provided the rehabilitation costs do not exceed replacement costs.

   Materials recovered from temporary use and accepted for reuse by the utility shall be credited to the project at prices charged to the job, less a 10 percent consideration for loss in service life. Materials recovered from the permanent facility of the utility that are accepted by the utility for return to stock shall be credited to the project at the current stock prices of such used materials. Materials recovered and not accepted for reuse by the utility, if determined to have a net sale value, shall be sold to the highest bidder by the local agency or utility following an opportunity for local agency inspection and appropriate solicitation for bids. If the utility practices a system of periodic disposal by sale, credit to the project shall be at the going prices supported by records of the utility.

   Federal participation may be approved for the total costs of removal when such removal is required by the highway construction or the existing facilities cannot be abandoned in place for aesthetic or safety reasons. When the utility facilities can be abandoned in place but the utility or highway contractor elects to remove and recover the materials, federal funds shall not participate in removal costs which exceed the value of the materials removed.

   The actual and direct costs of handling and loading materials and supplies at company stores or material yards, and of unloading and handling recovered materials accepted by the utility at its stores or material yards are reimbursable. In lieu of actual costs, average rates representative of actual costs may be used if approved by the local

agency and the FHWA. These average rates should be adjusted at least once annually to take into account known anticipated changes and correction for any over or under applied costs for the preceding period. At the option of the utility, 5 percent of the amounts billed for the materials and supplies issued from company stores and material yards, or the value of recovered materials will be reimbursed in lieu of actual or average costs for handling.

5. Equipment costs. The average or actual costs of operation, minor maintenance, and depreciation of utility-owned equipment may be reimbursed. Reimbursement for utility-owned vehicles may be made at average or actual costs. When utility-owned equipment is not available, reimbursement will be limited to the amount of rental paid (1) to the lowest qualified bidder, (2) under existing continuing contracts at reasonable costs, or (3) as an exception by negotiation when paragraph (1) and (2) of this section are impractical due to project location or schedule.

6. Transportation costs. The utility's cost, consistent with its overall policy, of necessary employee transportation and subsistence directly attributable to the project is reimbursable.

   Reasonable costs for the movement of materials, supplies, and equipment to the project and necessary return to storage including the associated cost of loading and unloading equipment is reimbursable.

7. Billings. After the FHWA approves the executed local agency/utility agreement, the utility may be reimbursed through the local agency by progress billings for costs incurred. Cost for materials stockpiled at the project site or specifically purchased and delivered to the utility for use on the project may also be reimbursed on progress billings following approval of the executed local agency/utility agreement.

   The utility shall provide one final and complete billing of all costs incurred, or of the agreed-to lump-sum, at the earliest practicable date. The final billing to the FHWA shall include a certification by the local agency that the work is complete, acceptable, and in accordance with the terms of the agreement.

   All utility cost records and accounts relating to the project are subject to audit by representatives of the state and federal government for a period of three years from the date final payment has been received by the utility.

.54 Reimbursement for Railroad Work.

AUTHORITY: 23 U.S.C. 315; 49 CFR 1.48, unless otherwise noted.

SOURCE: 40 FR 16057, April 9, 1975, unless otherwise noted.

a. Applicability. This subpart, and all references hereinafter made to "projects," applies to federal aid projects for the elimination of hazards of railroad highway crossings, and other projects which use railroad properties or which involve adjustments required by highway construction to either railroad facilities or facilities that are jointly owned or used by railroad and utility companies.

b. Reimbursement Basis.

   1. General. On projects involving the elimination of hazards of railroad highway crossings, and on other projects where a railroad company is not obligated to move or to change its facilities at its own expense, reimbursement will be made for the costs incurred in making changes to railroad facilities, required in connection with a federal aid highway project, as hereinafter provided.

   2. Eligibility. To be eligible, the costs must be:

      - For work which is included in an approved program;
      - Incurred subsequent to the date of authorization by the FHWA;
      - Incurred in accordance with the provisions of 23 CFR, Part 646, Subpart B; and
      - Properly attributable to the project.

c. Labor costs. (See Section 23.52.)

d. Materials and Supplies. (See Section 23.53 b 4.)

e. Equipment. (See Section 23.53 b 5.)

f. Transportation. (See Section 23.53 b 6.)

g. Credits for Improvements.

   1. Credit shall be made to the project for additions or improvements which provide higher quality or increased service capability of the operating facility, and which are provided solely for the benefit of the company.

   2. Where buildings and other depreciable company structures integral to operation of rail traffic must be replaced, credit shall be made to the project as set forth in 23 CFR 646.216(c)(2).

3. No credit is required for additions or improvements which are:
   - Necessitated by the requirements of the highway project.
   - Replacement which, although not identical, are of equivalent standard.
   - Replacements of devices or materials no longer regularly manufactured and the next highest grade or size is used.
   - Required by governmental and appropriate regulatory commission requirements.
4. Protection. The cost of essential protective services which, in the opinion of a railroad company, are required to ensure safety to railroad operations during certain periods of the construction of a project, is reimbursable provided an item for such services is incorporated in the railroad agreement or in a work order issued by the local agency and approved by FHWA.

i. Maintenance and Extended Construction. The cost of maintenance and extended construction is reimbursable to the extent provided for in 23 CFR 646.216(f)(4), and where included in the State Railroad Agreement or otherwise approved by the state and FHWA.

j. Lump Sum Payments. Where approved by FHWA, pursuant to 23 CFR 646.216(d)(3), reimbursement may be made as a lump sum payment, in lieu of actual costs.

k. Billings. (See Section 23.53 b 7.)

.55 Other Costs Allowable Subject to FHWA's Approval. Although some category of expenditures are not mentioned specifically in Part 140, "Reimbursement," of 23 CFR as eligible for federal participation, should the local agency wish to seek federal participation it is allowed to request approval from the FHWA prior to billing. The expenditures that relate to the federal aid project should be well identified through proper documentation.

.56 Other Unallowable Costs.

- Bad debts. Any losses arising from uncollectible accounts and other claims and related costs are not allowable.
- Contingencies. Contributions to a contingency reserve or any similar provisions for unforeseen events are unallowable.
- Contributions and Donations. Unallowable.
- Entertainment. Costs of amusements, social activities, and incidental costs relating thereto, such as meals, beverages, lodgings, rentals, transportation, and gratuities, are unallowable.
- Fines and Penalties. Costs resulting from violations of or failure to comply with federal, state, and local laws and regulations are unallowable.
- Governor's Expenses. The salaries and expense of the office of the governor of a state or the chief executive of a political subdivision are considered a cost of general state or local government and are unallowable.
- Interest and Other Financial Costs. Interest on borrowings (however represented), bond discounts, cost of financing and refinancing operations, and legal and professional fees paid in connection therewith, are unallowable except when authorized by federal legislation.
- Legislative Expenses. Salaries and other expenses of the state legislature or similar local governmental bodies, such as county supervisors, city councils, school boards, etc., whether incurred for purposes of legislation or executive direction, are unallowable.
- Underrecovery of Costs Under Grant Agreements. Any excess of cost over the federal contribution under one grant agreement is unallowable under other grant agreements.

23.6 Appendixes

23.61 Sample Form PPC2, "Federal Aid Request for Payment"

23.62 Instructions for Completing Form PPC2

17:LAG2C

Sample Form PPC2
Federal Aid Request for Payment

HES SYSTEM REQUEST FOR PAYMENT

Agency: Klickitat Co.
2401 S. 35th Street
Tacoma, WA98409-7487

Federal Aid No.: HES-C200(005)
Section: Glenwood Highway
Agreement No: LA-1814

PROGRESS BILL NO: 2 DATE: 9/20/93

Last Voucher Paid 07/19/93

LOCAL CONTRACT NO. RC-94 SCH #3

FINAL PROGRESS BILL? PE (YES) / NO
RIGHT OF WAY (YES) NO
CONSTRUCTION (YES) / NO

Copy

AGENCY BILLING IDENTIFICATION RC84
(For agency use only)

Project Completion Status
PE ____ %
Right of Way ____ %
Construction ____ %

	(000)	(00)	(0)	(1)	(2)	(3)	(4)	(5)	(6)	(7)	(8)	(9)
TYPE OF WORK	Total Expenditures This Period	Total Expenditures Prior	Total Expenditures To Date	Total Eligible This Period	Total Eligible Prior Period	Total Eligible To Date Col 1 + Col 2	Fed. %	Amount Claimed This Period Col 1 * Col 4	Amount Claimed Prior Periods	Total Claimed To Date Col 5 + Col 6	Amount Authorized Per Agreement	Remaining Federal Funds Col 8 - Col 7
P. E.												
a. Agency Work		0.00			0.00				0.00			
b.		0.00			0.00				0.00			
Total PE (a+b)		$0.00			$0.00				$0.00			
R.												
e. Agency Work		0.00			0.00				0.00			
f.		0.00			0.00				0.00			
Total RW (e+f)		$0.00			$0.00				$0.00			
CONSTRUCTION												
i. Contract		77,062.70			77,062.70		90.00%		69,356.43		88,200.00	
j. N/A		0.00			0.00		90.00%		0.00			
k.		0.00			0.00		90.00%		0.00			
l.		0.00			0.00		90.00%		0.00			
Total Contract Costs(i+j+k+l)		$77,062.70			$77,062.70				$69,356.43		88,200.00	
n. Agency Construction Engin.		2,500.00			2,500.00		90.00%		2,250.00		2,250.00	
o.		0.00			0.00		90.00%		0.00			
Total Const. Engineering		$2,500.00			$2,500.00				$2,250.00		2,250.00	
Total Construction		$79,562.70			$79,562.70				$71,606.43		90,450.00	
TOTAL PROJECT		$79,562.70	79,562.70	—	$79,562.70	79,562.70		—	$71,606.43	71,606.43	90,450.00	

I certify that in accordance with the laws of the State of Washington and under the conditions of approval for the project identified above, actual costs claimed have been incurred and are eligible for the purposes specified; also, that no other claims have been presented to, or payment made by the State of Washington for those costs claimed herein for reimbursement.

ADMINISTRATION OVERHEAD IS NOT ELIGIBLE FOR FEDERAL-AID REIMBURSEMENT

Signed: [signature] Title: Public Works Dir Date: Oct 12 1993

Approved by District Local Programs Engineer: [signature] for Date: 10/19/93

Distribution: Original and two copies -District 4 Local Programs, P.O. Box 1709,S-15, Vancouver, WA 98668-1709
One Copy - Retain in your Files

Form PPC2 Revised 06/07/91

This form only reflects the amounts claimed and authorized for payment to the local agency. It does not include costs for state services.

Distribution of Form

When the FHWA approves funding for a new project, Form PPC2 will be attached with a Fund Authorization letter from TransAid to be used for an agency's first progress billing. TransAid will include subsequent progress billing forms for the agency as an attachment to the payment voucher from WSDOT when payment for the previous billing is made.

Funding Set Up

The amount of federal funding set up for a project is based on the local agency agreement. The funding set up for each line item is shown in column (8). Column (8) should be compared with column (7) to ensure that the amounts requested are within the funding amount set up by the local agency agreement.

Payments will not be made in excess at the amount in column (8). If the amount in column (7) exceeds the amount shown in column (8), a supplement to the local agency agreement must be submitted to reflect the revised cost before payment can be made.

Data Required to Request Payment

As a minimum, only those line items for which payment is being requested need to be coded. The other lines can be left blank. Coding for columns (0), (3), and (7) is optional.

Coding Instructions

The PPC2 is arranged in the same manner as the local agency agreement though not all lines from the local agency agreement are shown on the PPC2. The lines for state services are not included because state costs are billed separately. Since the state services are not shown, the totals for PE, R/W, and Construction shown on the PPC2 will not agree with those shown on the local agency agreement. The PPC2 totals will reflect the total amount available to the local agency based on the local agency agreement.

The top portion of the form includes project identification information that will automatically appear on each progress billing. This information includes: Agency, Agreement No., Federal Aid No., Section, Progress Bill No., and Last Voucher Paid date. Please provide a date for the current billing period and indicate whether the billing represents a final voucher for PE, R/W, or Construction in the spaces provided. Enter the estimated amount of project completion in percent for the applicable phase.

A space has been provided for an "Agency Billing Identification" number. This eight character item is for the agency's use and is not required to receive payment. You may enter any combination of alphabetic and numeric symbols. This number can be used by the agency to identify each billing on the Vendor's Remittance Advice which is transmitted to the agency along with the EFT. The number will appear in the "Invoice Number" block on the Vendor's Remittance Advice.

Line a — Agency work for PE.

Eligible PE cost incurred by the local agency.

Line b — Other — For PE

Same as shown on agreement, usually consultant cost paid by local agency.

Line c — State Services (not shown on local billing).

Total PE — The sum of lines a and b equals the total amount claimed and authorized for payment to the local agency.

Column (8) on this line shows the total amount of federal funds set up for the local agency based on the latest version of the Local Agency Agreement. It does not include state services.

Line e — Agency Work for R/W

Eligible R/W cost incurred by local agency.

Line f — Other — R/W

Same as shown on Local Agency Agreement, usually consultant (etc.) cost paid by the local agency.

Line g — State Services (not shown on local billing).

Total R/W — The sum of lines e and f equals the total amount claimed and authorized for payment to the local agency.

Column (8) on this line shows the total amount of federal funds set up for the local agency based on the latest version of the Local Agency Agreement.

Line i — Contract

Eligible payments made to contractor.

Lines j, k, and l — Other

Other costs incurred by the local agency as indicated on the Local Agency Agreement, such as Day Labor, Agency Supplied Materials, etc.

Total Contract Work — The sum of lines i, j, k, and l equals the total amount claimed and authorized for payment to the local agency.

Line n — Agency Construction Engineering

Eligible construction engineering incurred by the local agency.

Line o — Other Construction Engineering

Eligible cost paid to others (consultant), as indicated on the Local Agency Agreement.

Line p — State forces (not shown on local billing).

Total Construction Engineering — The sum of lines n and o equals the total amount claimed and authorized for payment to the local agency.

Construction engineering cost (line q, column (7)), not to exceed 15 percent of the total construction work (line m, column (7)).

Total Construction — Add the Total Contract Work and the Total Construction Engineering. This is the total amount claimed and authorized for payment to the local agency.

Column (8) on this line shows the total amount of federal funds set up for the local agency based on the latest version of the Local Agency Agreement.

Total Project Cost — Add the Total PE, Total R/W, and Total Construction. This is the total amount claimed and authorized for payment to the local agency.

Column (8) on this line shows the total amount of federal funds for all phases of work for the local agency based on the latest version of the Local Agency Agreement.

Column (000) — Total Expenditures This Period

Record the total expenditure of this period for each item of work.

Column (00) — Total Expenditure Prior Period

This represents the total expenditure reported previously. This amount will be provided on the form.

Column (0) — Total Expenditure to Date

Add columns (000) and (00) and enter the total in this column.

Column (1) — Total Expenditures Eligible for Federal Participation This Period

Record the total eligible expenditures claimed this period for each item of work.

Column (2) — Total Eligible Prior Period

This represents the total amount of eligible expenditures previously claimed. This amount will be provided on the form.

Column (3) — Total Eligible to Date

Add column (1) and column (2) and enter the total in this column.

Column (4) — Percent Federal Participation

The current federal aid participation ratio will be provided.

Column (5) — Amount Claimed This Period

Column 5 can never exceed column 1 times column 4, but may be less than. Multiply column (1) by column (4) and enter in column (5). This represents the amount of federal funds claimed on this progress bill.

Column (6) — Federal Funds Paid Prior Period

This represents the total amount of federal funds previously claimed (column (7) on the previous billing). This amount will be provided on the form.

Column (7) — Total Claimed to Date

Add column (5) and column (6) and enter the total in this column. The total claimed to date for PE, R/W, and Construction **cannot** exceed the amount authorized shown in column (8).

Column (8) — Amount Authorized Per Agreement

This is the total amount of federal funds authorized for each line item per the latest version of the Local Agency Agreement. This amount will be provided on the form.

Column (9) — Remaining Federal Funds

Subtract column (7) from column (8) and enter the difference in this column. The difference represents the remaining federal funds available. This column cannot be a negative value. If negative, a supplement to the Local Agency Agreement must be prepared to receive full payment.

Sign and date the progress billing and distribute according to the instructions located at the bottom of the form. If you have any questions, please contact your Regional TransAid Engineer.

24.1 General Discussion

Since this manual outlines the federal procedures that a local agency must follow for a Federal Highway Administration (FHWA) funded project, only compliance with the National Environmental Policy Act (NEPA) will be described in detail. If a local agency needs assistance in determining the environmental classification of a project, they are encouraged to contact the Regional TransAid Engineer to arrange for a field review of the proposed project. Also, a local agency should be aware of the following State Environmental Policy Act (SEPA) requirements:

- All projects, regardless of the funding source, must comply with: SEPA of 1971 as supplemented in 1983, RCW 43.21C; "SEPA Rules," WAC 197-11, and local ordinances.
- While Environmental Impact Statement (EIS) documentation that meets NEPA requirements usually satisfies SEPA requirements, SEPA documents do not necessarily satisfy NEPA requirements.
- A SEPA checklist may be required if right-of-way or state permits are required for a Class II, NEPA — Categorical Exclusion (CE) project.
- Since not all NEPA CEs are SEPA Categorical Exemptions, these projects may need environmental approval both as a NEPA CE and as a SEPA Determination of Non-Significance (DNS).
- No EIS is required when a NEPA Environmental Assessment (EA) supports a NEPA Finding of No Significant Impact (FONSI) or when a SEPA checklist supports a SEPA DNS.
- When the NEPA EA or EIS is developed in coordination with state and local agency requirements, the document and its appropriate review and processing may be adopted to satisfy SEPA requirements in accordance with WAC 197-11-610.
- The Adoption Notice, WAC 197-11-965, is filled out by the local agency and circulated to the Department of Ecology (DOE), to agencies with jurisdiction, and to persons or organizations who have responded to the proposal in writing.

When the project involves federal funds or federal permits, its environmental requirements are governed by:

- NEPA of 1969, 42-USC-4321 et seq.
- Council on Environmental Quality Regulations for Implementing NEPA,"40 CFR, Parts 1500, et seq.
- Federal Highway Administration — Federal Transit Administration," 23 CFR, Part 771.
- Environmental Impact and Related Procedures," 49 CFR, Part 622.

This manual and the Washington State Department of Transportation's (WSDOT) *Environmental Procedures Manual* (M 31-11) should be used to conduct the environmental evaluation.

Environmental evaluation starts with project classification which is normally the initial step in project development. A project will fall into one of three defined classes, depending on the extent of its impacts. The three classes are defined in Section 24.2.

Federal regulations require the use of an interdisciplinary approach to assess a project's social, economic, and environmental impacts. "Interdisciplinary" means integrated consideration of the project's aspects through such disciplines as biology, economics, geology, sociology, urban planning, archeology, communications, and acoustics in addition to traditional civil engineering expertise. Interdisciplinary requirements for each class of project are discussed in Sections 24.3, .4, and .5. The Regional TransAid Engineer can advise local agencies on how to set up an interdisciplinary approach.

It is permissible to complete activities, such as budgeting, prospectus development, legislative or feasibility studies, and value engineering studies prior to the environmental evaluation. At the discretion of the local agency, other activities, such as preliminary engineering for soil surveys and location studies, may be done in conjunction with or prior to the environmental evaluation.

Flow charts depicting the NEPA environmental processes for each class of project are included in Section 24.2. Definitions of terms used in these processes are given in the Glossary.

All EISs will be written in a format described in WSDOT's *EIS Format Standards* (M 31-14). If these documents are presented to the public, the documents must have English units. Therefore, if a project is designed in metric, the environmental documents must show dual English/metric units.

24.2 Project Classification

All projects will be classified by the local agency as either Class I, II, or III as defined below. The classification should take place as early as possible in the project's development since the scope of the subsequent environmental evaluation and documentation processes depends on the project's class. Upon this determination, the local agency completes the environmental classification section of the project prospectus.

The following paragraphs define the three classes of projects and list types of work typically found in each class.

.21 Class I, NEPA — Environmental Impact Statement (EIS). Actions likely to have significant impact on the environment by virtue of their effects upon land use, planned growth, development patterns, traffic volumes, travel patterns, transportation services, natural resources, or by virtue of the fact that they are apt to create public controversy are Class I projects. An EIS can be prepared without developing an Environmental Assessment (EA). Refer to Section 24.3.

Projects which usually require an EIS are:

a. A new controlled-access freeway.

b. A highway project of four or more lanes on a new location.

c. New construction or extension of fixed rail transit facilities (e.g., rapid rail, light rail, commuter rail, automated-guideway transit).

d. New construction or extension of a separate roadway for buses or high-occupancy vehicles not located within an existing highway facility.

The local agency checks the "preliminary" box and completes the Local Agency "Environmental Classification Summary" (ECS) form utilizing known project information, as developed in the planning stage and/or the Growth Management Act requirements on all Class I projects. The ECS is submitted by the local agency with the Project Prospectus and the Local Agency Agreement to the Regional TransAid Engineer for submittal to FHWA for preliminary concurrence. The local agency distributes copies to resource agencies for information and coordination purposes.

Class I projects under the NEPA/SEPA/Section 404 Interagency Working Agreement (for a copy, see the Environmental Affairs Office home page at http://www.wsdot.wa.gov) involve projects that impact Waters of the United States or Waters of the State require an individual permit from the U.S. Army Corps of Engineers (COE). Local agencies will perform the required environmental scoping as a priority after project funding is obligated. After scoping is completed, the local agency checks the "final" box and completes the ECS for submittal to the Regional TransAid Engineer for FHWA's final concurrence. The local agency distributes copies to resource agencies for information and coordination purposes. See Appendix 24.81 for other environmental requirements pertaining to the Project Definition and Budget stage of project development.

After scoping is completed for Class I projects that are not included in the NEPA/SEPA/Section 404 Interagency Working Agreement, the local agency checks the "final" box and completes the ECS for submittal to the Regional TransAid Engineer for FHWA's final concurrence. The ECS should be submitted as early as possible and/or practical in the project development stage. The local agency distributes copies to resource agencies for information and coordination purposes.

.22 Class II, NEPA — Categorical Exclusion (CE). Unless specifically requested by other agencies or the public, these actions do not require an EIS or an EA. Class II projects are defined further by three subcategories as described below. The subcategory class determines the documentation and approval required.

CEs are actions which meet the definition contained in 40 CFR 1508.4 and, based on past experience with similar actions, do not involve significant environmental impacts. They are actions which: do not induce significant impacts to planned growth or land use for the area; do not require the relocation of significant numbers of people; do not have a significant impact on any natural, cultural, recreational, historic, or other resource; do not involve significant air, noise, or water quality impacts; do not have significant impacts on travel patterns; or do not otherwise, either individually or cumulatively, have any significant environmental impacts.

Any action which normally would be classified as a CE but could involve unusual circumstances will require the FHWA and the Federal Transit Administration (FTA), in cooperation with the applicant, to conduct appropriate environmental studies to determine if the CE classification is proper. Such unusual circumstances include:

- Significant environmental impacts;
- Substantial controversy on environmental grounds;
- Significant impact on properties protected by Section 4(f) of the DOT Act or Section 106 of the National Historic Preservation Act; or
- Inconsistencies with any federal, state, or local law, requirement, or administrative determination relating to the environmental aspects of the action.

a. <u>Class II projects not requiring documentation for FHWA approval.</u>

Projects in this subcategory that meet the criteria for CE, normally only require marking the appropriate section of the project prospectus and do not require any further NEPA documentation or approvals by FHWA and FTA. The criteria is detailed in the CEQ regulation (Section 1508.4) and paragraph 771.117(a). The following are these types of projects:

1. Activities which do not involve or lead directly to construction, such as planning and technical studies; grants for training and research programs; research activities as defined in 23 U.S.C. 307; approval of a unified work program and any findings required in the planning process pursuant to 23 U.S.C. 134; approval of statewide programs under 23 CFR Part 630; approval of project concepts under 23 CFR Part 476; engineering to define the elements of a proposed action or

alternatives so that social, economic, and environmental effects can be assessed; and federal aid system revisions which establish classes of highways on the federal aid highway system.

2. Approval of utility installations along or across a transportation facility.
3. Construction of bicycle and pedestrian lanes, paths, and facilities.
4. Activities included in the state's "Highway Safety Plan" under 23 U.S.C. 402.
5. Transfer of federal lands pursuant to 23 U.S.C. 317 when the subsequent action is not an FHWA action.
6. The installation of noise barriers or alterations to existing publicly-owned buildings to provide for noise reduction.
7. Landscaping.
8. Installation of fencing, signs, pavement markings, small passenger shelters, traffic signals, and railroad warning devices where no substantial land acquisition or traffic disruption will occur.
9. Emergency repairs under 23 U.S.C. 125.
10. Acquisition of scenic easements.
11. Determination of payback under 23 CFR Part 480 for property previously acquired with federal aid participation.
12. Improvements to existing rest areas and truck weigh stations.
13. Ridesharing activities.
14. Bus and rail car rehabilitation.
15. Alterations to facilities or vehicles in order to make them accessible for elderly and disabled persons.
16. Program administration, technical assistance activities, and operating assistance to transit authorities to continue existing service or increase service to meet routine changes in demand.
17. The purchase of vehicles by the applicant where the use of these vehicles can be accommodated by existing facilities or by new facilities which themselves are within a CE.
18. Track and railbed maintenance and improvements when carried out within the existing right of way.
19. Purchase and installation of operating or maintenance equipment to be located within the transit facility and with no significant impacts off the site.
20. Promulgation of rules, regulations, and directives.

b. <u>Class II projects requiring documentation without further FHWA approval.</u>

The documentation required is a completed ECS. Local agencies submit the ECS for this category to the Regional TransAid Engineer for approval and it is held in the regional project file.

- The action does **not** have any significant environmental impacts or involve any unusual circumstances as described.
- The action conforms to the Air Quality State Implementation Plan which is approved or promulgated by the Environmental Protection Agency in air quality non-attainment areas.
- The action is consistent with the state's Coastal Zone Management Plan as determined by the appropriate state agency.
- The action occurs in an area where there are no federally listed endangered or threatened species or critical habitat.

Examples of such projects include:

1. Modernization of a highway by resurfacing, restoration, rehabilitation, reconstruction, adding shoulders, or adding auxiliary lanes (e.g., parking, weaving, turning, climbing).
2. Highway safety or traffic operations improvement projects including the installation of ramp metering control devices and lighting.
3. Bridge rehabilitation, reconstruction, or replacement or the construction of grade separation to replace existing at-grade crossings.
4. Transportation corridor fringe parking facilities.
5. Construction of new truck weigh stations or rest stations.
6. Approvals for disposal of excess right-of-way or for joint or limited use of right-of-way, where the proposed use does not have significant adverse impacts.
7. Approvals for changes in access control.
8. Construction of new bus storage and maintenance facilities in areas used predominantly for industrial or transportation purposes where such construction is not inconsistent with existing zoning and located on or near a street with adequate capacity to handle anticipated bus and support vehicle traffic.

9. Rehabilitation or reconstruction of existing rail and bus buildings and ancillary facilities where only minor amounts of additional land are required and there is not a substantial increase in the number of users.

10. Construction of bus transfer facilities (an open area consisting of passenger shelters, boarding areas, kiosks, and related street improvements) when located in a commercial area or other activity center in which there is adequate street capacity for projected bus traffic.

11. Construction of rail storage and maintenance facilities in areas used predominantly for industrial or transportation purposes where such construction is not inconsistent with existing zoning and where there is no significant noise impact on the surrounding community.

12. Acquisition of land for hardship or protective purposes; advance land acquisition loans under Section 3(b) of the UMT Act. Hardship and protective buying will be permitted only for a particular parcel or a limited number of parcels. These types of land acquisition qualify for a CE only where the acquisition will not limit the evaluation of alternatives, including shifts in alignment for planned construction projects, which may be required in the NEPA process. No project development on such land may proceed until the NEPA process has been completed.

It should be noted that some of these types of projects may not be exempt from the SEPA process. In addition, the local agency is responsible for submittals required by other state agencies.

c. <u>Class II projects requiring documentation and FHWA approval (documented CE).</u>

Projects in this subcategory requires the local agency complete the ECS for submittal to the Regional TransAid Engineer for FHWA's concurrence prior to beginning the PS&E.

Projects may require detailed environmental studies for CE documentation to determine the environmental, economic, and social impacts. After obligation of PE funds, the detailed analyses can take place and the local agency finalizes the ECS for final approval.

Examples of these situations are as follows:

1. The acquisition of more than minor amounts of temporary or permanent strips of right-of-way for construction of such items as clear vision corners and grading. Such acquisitions will not require any commercial or residential displacements.

2. The use of properties protected by Section 4(f) of the Department of Transportation Act (49 USC 303).

3. A determination of adverse effects by the State Historic Preservation Office.

4. Any U.S. Coast Guard construction permits or any U.S. Army Corps of Engineers Section 404 permits.

5. Any work in wetlands.

6. Any work encroaching on a regulatory flood-way or any work affecting the flood-plain (100-year flood) elevations of a water course or lake.

7. Construction in, across, or adjacent to a river designated as a component or proposed for inclusion in the National System of Wild and Scenic Rivers published by the U.S. Department of the Interior/U.S. Department of Agricultural.

8. Any changes in access control.

9. The use of a temporary road, detour, or ramp closure unless the use of such facilities satisfy the following conditions:

   - Provisions are made for access by local traffic and so posted.
   - Through-traffic dependent business will not be adversely affected.
   - The detour or ramp closure, to the extent possible, will not interfere with any local special event or festival.
   - The temporary road, detour, or ramp closure does not substantially change the environmental consequences of the action.
   - There is no substantial controversy associated with the use of temporary road, detour, or ramp closure.

10. Any known hazardous materials sites or previous land uses with potential for hazardous materials sites or previous lands uses with potential for hazardous materials remains within the right-of-way.

11. Any projects that involve unusual circumstances not listed or public opposition.

.23 Class III, NEPA — Environmental Assessment (EA). For actions in which the significance of the impact on the environment is not clearly established, an EA is prepared to determine the extent of environmental impact and to determine whether an EIS is needed. No EIS is required when the EA supports a NEPA Finding of No Significant Impact (FONSI). Refer to Section 24.5.

The local agency checks the "preliminary" box and completes the Local Agency "Environmental Classification Summary" (ECS) form utilizing known project information, as developed in the planning stage and/or the Growth Management Act requirements on all Class III projects. The ECS is submitted by the local agency with the Project Prospectus and the Local Agency Agreement to the Regional TransAid Engineer for submittal to FHWA for preliminary concurrence. The local agency distributes copies to resource agencies for information and coordination purposes.

Class III projects under the NEPA/SEPA/Section 404 Interagency Working Agreement (for a copy, see the Environmental Affairs Office home page at http://www.wsdot.wa.gov) involve projects that impact Waters of the United States or Waters of the State require an individual permit from the U.S. Army Corps of Engineers (COE). Local agencies will perform the required environmental scoping as a priority after project funding is obligated. After scoping is completed, the local agency checks the "final" box and completes the ECS for submittal to the Regional TransAid Engineer for FHWA's final concurrence. The local agency distributes copies to resource agencies for information and coordination purposes.

Class III projects not included in the NEPA/SEPA/ Section 404 Interagency Working Agreement. After scoping is completed, the local agency checks the"final" box and completes the ECS for submittal to the Regional TransAid Engineer for FHWA's final concurrence. The final ECS should be submitted as early as possible and/or practical in the project development stage. The local agency distributes copies to resource agencies for information and coordination purposes.

.24 Progress Flow Charts for Class I, II, and III Projects.

The following flow charts illustrate the progress through which Class I, Class II, and Class III projects should follow.

Class I Projects

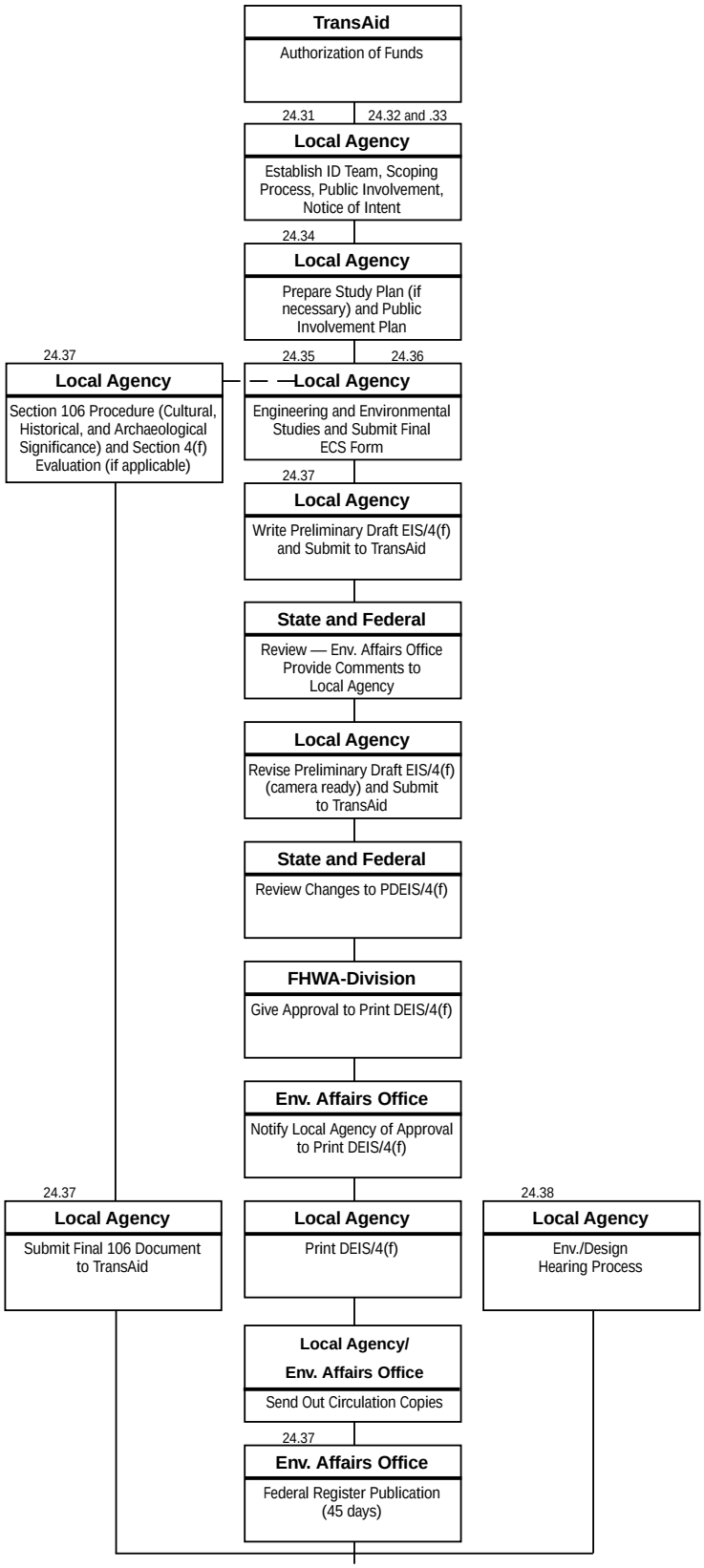

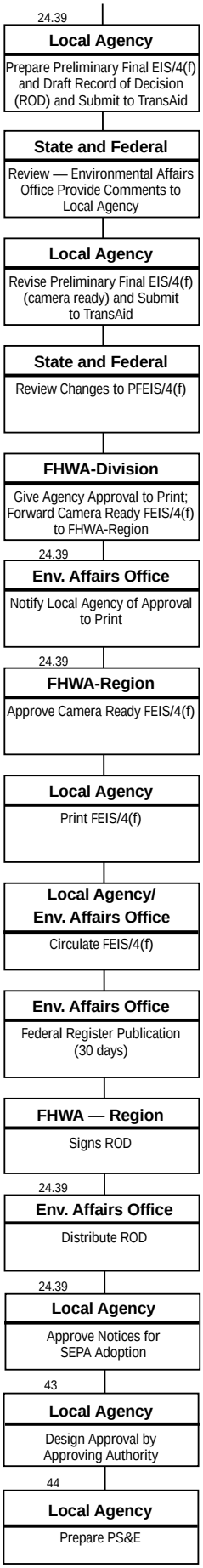

Class II Projects

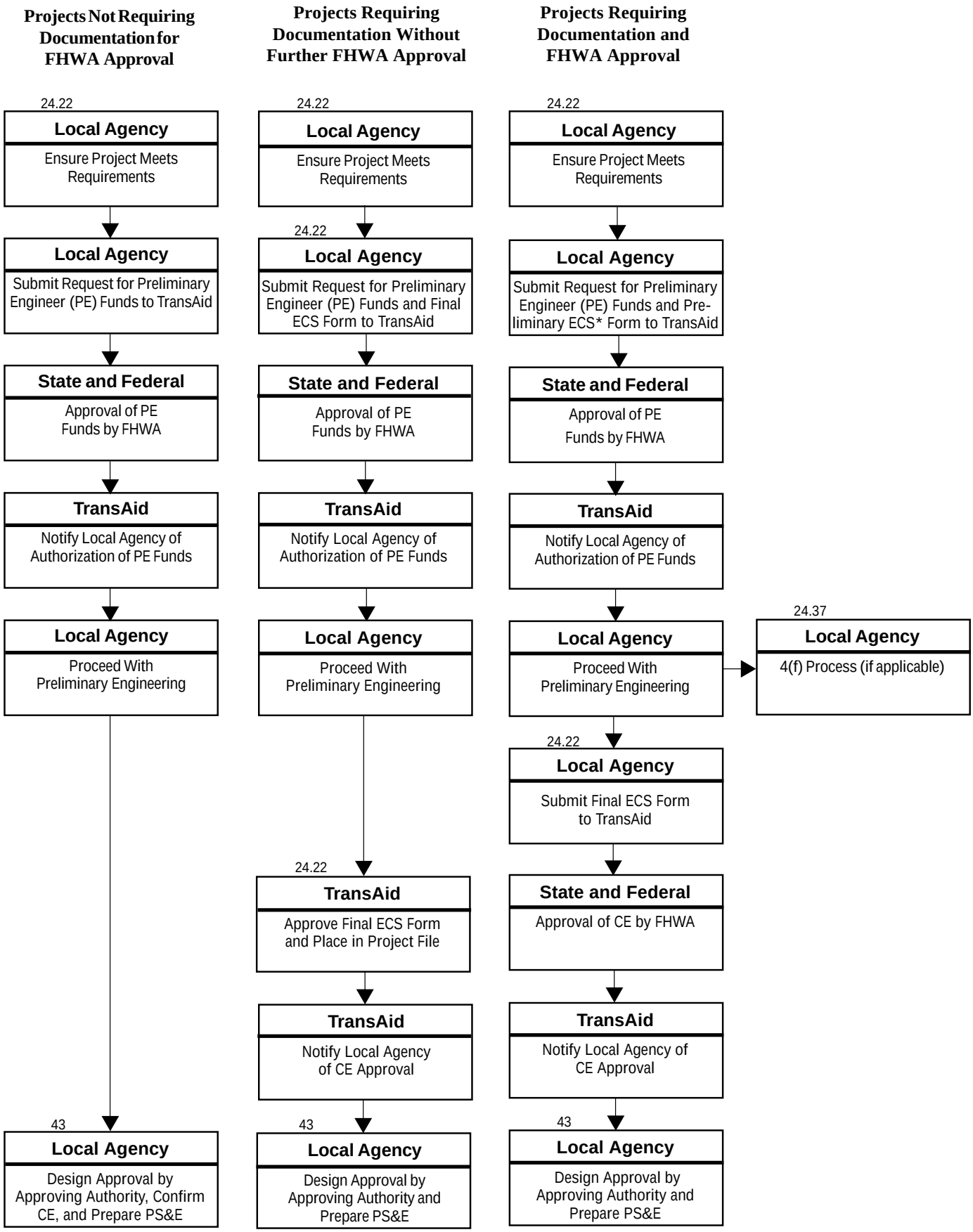

*If project requires detailed environmental studies for CE documentation or preparation of an EA.

Class III Projects

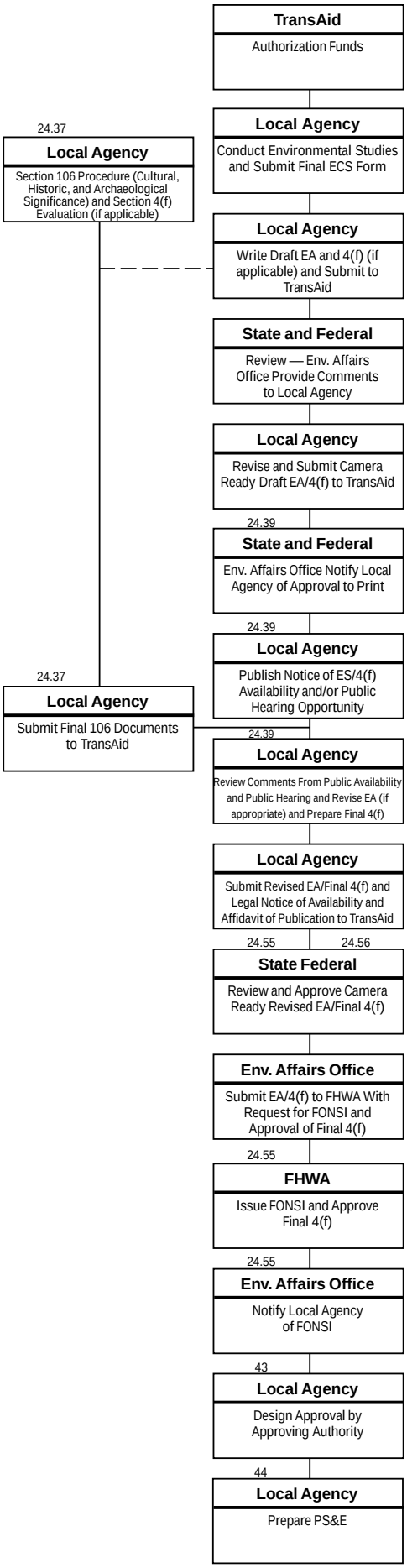

24.3 Procedures for Class I Projects

The activities described in this section are summarized on the flow chart for Class I projects contained in Section 24.24.

.31 Notice of Intent. After FHWA authorization of preliminary engineering funds, the local agency prepares a Notice of Intent for publication in the Federal Register advising federal, state, and local agencies that an EIS will be prepared. The contents and guidelines for preparation of the notice are found in FHWA Notice N 6640.19 of March 24, 1980. The notice is submitted to the Environmental Affairs Office which submits it to FHWA for placement in the Federal Register.

.32 Project Manager (PM) and Interdisciplinary Team (IDT). The agency administrator delegates the project's administrative responsibilities to a Project Manager and provides support staff to assist in project administration.

The local agency appoints experts in various disciplines to an IDT which functions as an advisory board to the agency administrator. The IDT provides objective in-depth studies, analyses, reports, guidance, and recommendations concerning the proposed improvement as it relates to social, economic, and environmental issues.

The disciplines and personnel selected for the IDT depend on the nature and magnitude of the project. The local agency may request WSDOT to assign discipline representatives to the IDT. WSDOT personnel are assigned when available and may be supplemented by consultants, personnel from other state or local agencies, and the community. The IDT, community groups, and planning agencies may suggest inclusion of additional disciplines.

IDT members may have expertise in such areas as acoustics, air quality, archaeology, architecture, biology, botany, communications, economics, geology, hydrology, landscape-architecture, meteorology, sanitary engineering, sociology, structural engineering, transportation planning, urban planning, water quality, and other disciplines as appropriate.

Duties and responsibilities of the IDT include:

a. Review and approval of a study plan and a public involvement plan.

b. Evaluation of alternative courses of action.

c. Preparation of reports (data and conclusions of technical studies; views of citizens, officials, and groups).

d. Submission of recommendations to the PM.

The PM, in consultation with the various disciplines, prepares a proposal, identifies affected parties, and outlines environmental concerns and alternatives to be included in the scoping process.

.33 Scoping. Scoping is a process used to identify potential environmental concerns or controversy and alternatives for the EIS as early as possible. It includes a series of meetings, telephone conversations, or written comments involving various agencies, interest groups, and individuals.

The PM is responsible for development and coordination of the scoping process. Specific scoping objectives are:

a. To identify the affected public and agency concerns.

b. To define the issues and alternatives to be examined in detail in the EIS.

c. To save time by attempting to ensure that draft EISs adequately address relevant issues, thus reducing the possibility that an EIS will have to be rewritten or supplemented.

d. To facilitate an efficient EIS preparation process by assembling the cooperating agencies, ascertaining which permits and reviews need to be scheduled concurrently, and establishing completion times.

Prior to the scoping process, the local agency provides affected agencies, Indian tribes, interest groups, and the IDT with information about the proposal including a brief description, statement of goals, tentative alternatives, probable environmental impacts and issues, maps, drawings, and a brief explanation of the scoping procedure. The PM documents proceedings and correspondence concerning the scoping process.

The scoping process continues through the development of the DEIS.

.34 Study Plan and Public Involvement Plan.

a. The local agency should prepare a study plan. It should be completed immediately after the issues and alternatives have been identified in the initial stages of the scoping process. The study plan, which shows the environmental studies to be conducted, is prepared by the PM and approved by the IDT and the local agency. The study plan describes the level of effort intended for defining the interdisciplinary approach, public involvement, alternatives to be studied, and social, economic, and environmental issues.

The study plan should indicate the following:

1. Title sheet:

(a) Project title.

(b) Date.

(c) Approval date and signature of:

- Team chairman.
- Agency administrator.

2. Vicinity map.

3. Need and purpose:
   (a) Need (known deficiencies).
   (b) History (if applicable).
   (c) Purpose of project.
   (d) How proposed project will satisfy the need.
4. Scope of work:
   (a) Interdisciplinary approach (brief description of how the team uses interdisciplinary information to reach decisions).
   (b) Alternatives.
   (c) Public involvement summary (to date).
   (d) Brief description of areas of primary importance and significant controversy.
5. List of cooperating agencies.
6. Studies to be prepared and areas of responsibility:
   (a) List of studies to be prepared and disciplines involved.
   (b) Identify IDT members, project manager, and IDT chairperson.
   (c) Identify education and experience of all expertise in format required for EIS.
7. Staffing and budget requirements.
8. Project schedule.
9. Date and location of scoping meetings.
10. Appendix: Public involvement plan.

b. The local agency must prepare a public involvement plan that outlines the procedures for presenting information to the public, obtaining comments, and ensuring consideration of public opinion.

In preparing the public involvement plan, consider the following:

1. Methods to provide information and receive comments:
   (a) Public meetings.
   (b) Surveys of public opinions.
   (c) Meetings with groups having special interests in transportation.
   (d) Information centers or booths.
   (e) Advisory committees.
   (f) Meetings with public officials.
   (g) News releases (all mass media).
   (h) Newsletters.
   (i) Presentations and call-in questions on radio and television talk shows.
2. Time schedule to accomplish each task (different methods may be carried out simultaneously.)
3. Methods to be used in considering public comments during the decision-making process.
4. Personnel, time, and funds required to conduct the program.
5. The public involvement plan is a part of the scoping process.

.35 Selection of Alternatives. The alternatives to be studied are identified by the PM, the IDT, and through the scoping process. The IDT studies proposed alternatives and determines their likely social, economic, and environmental effects. Generally, each alternative is developed to the same level of detail so that comparisons of effects can be made. The draft EIS shall evaluate all reasonable alternatives to the action and discuss the reasons why other alternatives which may have been considered were eliminated from detailed study. Alternatives should be openly discussed with all affected groups.

A listing of features to be considered for each alternative, along with a comparative matrix to assess differences, is shown in the EIS Outline found in WSDOT's *Environmental Procedures Manual*.

Alternatives normally include the following:

a. The no-action alternative which could include short-term minor reconstruction activities (safety improvements, etc.) that are part of an ongoing plan for continuing operation of the existing roadway.
b. Improvement of the existing facility, which could include resurfacing, restoration, rehabilitation, and reconstruction types of activities.
c. Construction of new transportation facilities on new routes and locations.
d. Multimodal alternatives, including public transit, rail, or other modes dictated by the characteristics of the study area. These may be under the jurisdiction of other lead agencies and require early coordination.
e. Possible combinations of b, c, and d above.

.36 Data Collection, Inventory, and Evaluation. The IDT develops an inventory of social, economic, environmental, and engineering data. The information is used to define the environment; to predict and analyze project impacts; to help select the preferred alternative; to prepare environmental documents; and to inform other agencies, interest groups, or individuals. Sources of data include, but are not limited to, field studies, consultation, and coordination with other agencies and the public. WSDOT's *Environmental Procedures Manual* and FHWA Technical Advisory

T6640.8A are general guides to the types of information, depth of study, and procedures to be used in collection, inventory, and evaluation of required environmental data. The following is a list of areas considered in the development of an environmental document.

Biological/Physical:
- Air Quality
- Noise
- Energy
- Geology and Soils
- Waterways and Hydrological Systems
  - Water Body Modification
  - Wild and Scenic Rivers
  - Coastal Zone Impacts
  - Coastal Barriers
- Flood Plains
- Water Quality
- Wetlands
- Wildlife, Fisheries, and Vegetation

Social/Economic:
- Farmland
- Land Use
- Social Elements
  - Community Cohesion
  - Environmental Justice — The goal is that minority and low income individuals should not suffer a disproportionate share of negative environmental impacts resulting from federal, state, local and tribal programs and policies. It also mandates consultation with all potentially affected groups in the development of projects with environmental impacts.
  - Recreation — When applicable include a 6(f) discussion. Section 6(f) of the Land and Water Conservation Fund Act of 1965 states: No property acquired or developed with assistance under this section shall, without the approval of the Secretary (of the Interior), be converted to other than public recreation uses. The Secretary shall approve such conversions only if it is found to be in accord with the then existing comprehensive state outdoor recreation plan and only upon such conditions as is deemed necessary to assure the substitution of the recreation properties of at least equal fair market value and of reasonably equivalent usefulness and location. (see the *Environmental Procedures Manual* (M 31-11) Volume 2, Chapter 3-7, for additional information)
  - Regional and Community Growth
  - Services
  - Pedestrian and Bicyclist Facilities
- Economic Elements
  - Employment
  - Tax Revenues
  - Property Values
- Relocation
- Historic and Archaeological Elements
- Hazardous Waste
- Visual Quality
- Construction Activity Impacts
- Irreversible and Irretrievable Commitment of Resources
- Relationship of Short-Term Uses of Environment and Long-Term Productivity
- Secondary and Cumulative Impacts

.37 Reports and Recommendations.

a. Discipline Reports. After data has been collected, inventories compiled, and analyses completed, each discipline representative prepares a segment of the report. The reports document the technical studies and investigations performed, provide a summary of findings, and list recommendations. If there are any individual reports, they should be submitted to the project manager for review.

Since the reports must communicate equally to technical and nontechnical groups, a summary is written to present the significant findings and recommendations in nontechnical terms. The information is presented in a form suitable for incorporation into the EIS, for presentation at public hearings, or for use by management and lay groups in decision-making. The summary must contain an introduction, conclusions, and recommendations.

The technical portion of the discipline report provides evidence that all the major areas of potential impact have been considered. It presents information to support the findings of significance and effect, and demonstrates clearly that the study is in compliance with the requirements of environmental law. The discipline report normally contains:

- Summary of report findings, conclusions, and recommendations.
- Background discussion.
- Study methodology.
- Coordination with other groups or agencies.
- Affected environment (existing conditions).
- Prediction of impacts of each alternative.
- Impact mitigation measures.
- Construction information.
- Maintenance and operation information.
- Bibliography.

b. Preliminary Recommendations. The PM reviews all discipline reports and documents preliminary recommendations after discussing the various tradeoffs with the IDT.

c. Draft Environmental Impact Statement (DEIS) and Commitment File. The DEIS is the initial local agency project report. It identifies the alternative actions and presents an analysis of their impacts on the environment. Usually the DEIS does not identify a recommended course of action. The DEIS summarizes the early coordination process, including scoping, and identifies the key issues and pertinent information received through these efforts.

All EIS documentation must comply with the requirements of NEPA and the Council on Environmental Quality (CEQ) guidelines.

On projects where federal agencies have funding or permitting responsibility, one federal agency is the lead agency. The local agency, WSDOT, and the federal lead agency are mutually responsible for the EIS. Any other federal agency may be involved as a cooperating agency. Projects jointly developed with a federal agency should comply with that agency's regulations and guidelines.

The local agency prepares a preliminary DEIS using data supplied by the IDT and other sources.

The local agency also prepares a commitment file consisting of proposed mitigating measures, commitments made to other agencies, and any other commitment made on behalf of the project. The local agency is responsible for maintaining the commitment file during the environmental review process.

Upon completion of the preliminary DEIS, the local agency submits the document to the Regional TransAid Engineer for review and comment by the Olympia Service Center and FHWA.

Review comments are returned to the local agency for revision of the preliminary DEIS as appropriate. After making changes in response to comments on the preliminary DEIS, the local agency submits the DEIS to the Regional TransAid Engineer for processing (signature) of the title sheet by the WSDOT Director, Environmental Services. FHWA and the Environmental Affairs Office returns the signed title page and approval to print the DEIS. Required copies of the document are then submitted to the Regional TransAid Engineer for circulation.

The DEIS is submitted to the WSDOT Environmental Affairs Office for transmittal to the EPA for processing so that a notice may be published in the Federal Register. A comment period of not less than 45 days begins upon publication in the Federal Register. The DEIS shall be made available to the public and transmitted to agencies for comment no later than the time the document is filed with the EPA.

Circulation of the DEIS is a responsibility shared between the local agency and the WSDOT Environmental Affairs Office. The local agency circulates the DEIS to any agency, organization, public official, or person who expresses interest in or requests it. The agency also provides it to any governmental agency authorized to develop and enforce environmental standards, and any governmental agency authorized to issue permits. The Regional TransAid Engineer will coordinate with the WSDOT Environmental Affairs Office and FHWA to ensure that circulation of the DEIS is accomplished in accordance with federal and state requirements. Generally, all copies of the DEIS are furnished free of charge. After initial circulation, a printing fee may be charged as long as it does not exceed the cost of printing.

d. Draft Section 4(f) Evaluation. Section 4(f) of the Department of Transportation Act states that the FHWA will not approve the use of land from a significant publicly owned, park recreation area, or wildlife and waterfowl refuge, or any significant historic site unless a determination is made that:

- There is no feasible and prudent alternative to the use of land from the property; and
- The proposed action includes all possible planning to minimize harm to the property resulting from such use.

A section 4(f) evaluation must be included in a separate section of the environmental document (see the *Environmental Procedures Manual* (M31-11) Volume 3, Chapter 5-3 for additional information).

A separate evaluation is prepared for each location within the project where the use of Section 4(f) property is being considered. The Section4(f) evaluation must include:

1. Description and need for the proposed action.
2. Description of the Section 4(f) properties.
3. Impacts on the resource by each alternative.
4. Alternatives that avoid Section 4(f) properties and their impacts.
5. Measures to minimize harm.
6. Coordination with appropriate agencies.

The DEIS and Draft Section 4(f) Evaluation Report must be circulated to the Secretary of the U.S. Department of the Interior for a 45-day review and comment period. When appropriate, the Secretary of Housing and Urban Development and the Secretary of Agriculture (federal) are also given an opportunity to review the proposal. When a Section 4(f) property is identified after the DEIS has been processed, a separate Section 4(f) Evaluation is prepared, circulated for comment, and finalized. See Section 24.39(c) below.

e. Section 106 Preliminary Case Report. Section 106 of the National Historic Preservation Act of 1966 requires that the agency determine whether there are any National Registers listed or eligible properties that could be affected by the proposed project.

When cultural resources are discovered, the following steps are taken (WSDOT Olympia Service Center normally takes the lead in these actions):

1. Send Determination of Eligibility form and cultural resource report to State Historical Preservation Officer (SHPO).
2. If on or eligible for the National Register of Historic Places, send Determination of Effect form to SHPO for concurrence.
3. If resource property is affected, apply the Criteria of Adverse Effect and get SHPO's concurrence.
4. When there is an adverse effect, prepare a Section 106 Preliminary Case Report per 36 CFR 800. This report generally identifies any adverse effects and actions taken to mitigate effects.
5. Send report to FHWA requesting comments; FHWA will forward the report to the Advisory Council on Historic Preservation for their comments.
6. Prior to Final EIS preparation, participate in the development of a Memorandum of Agreement with the Advisory Council, SHPO, and FHWA that includes measures to avoid, mitigate, or accept the adverse effects on a resource.

Projects which involve right-of-way acquisition or excavation have potential to uncover archaeological or historical resources. Under these conditions, an archaeological survey should be considered. For information on archaeological surveys, contact the Regional TransAid Engineer.

Section 4(f) requirements apply when the Section 106 property in question is on or eligible for the National Register of Historic Places. When a Section 4(f) Evaluation is required, the Section 106 Preliminary Case Report and Draft Section 4(f) Evaluation will be one document to satisfy the requirements of both laws.

For further information, see the WSDOT *Environmental Procedures Manual* mentioned in Section 24.35.

.38 Hearings and Notices. When the local agency advertises for an environmental, design, or combined environmental/design hearing, or offers a notice of opportunity for public hearing, the notice will comply with requirements of 23 CFR, Part 771.111(h) and announces the availability of the environmental document and where it may be obtained and/or reviewed. Where hearings are not required by statute, an informational meeting may serve as a useful forum for public involvement in the environmental process.

a. References:

1. Council on Environmental Quality (CEQ) Regulations, 40 CFR, Part 1506.6.
2. USDOT Order 5610.1C.
3. 23 CFR, Part 771.
4. WAC Orders 197-11-510 and 535.

b. NEPA Requirements:

1. Public hearings are required for NEPA projects when:
   (a) Substantial environmental or public controversy exists;
   (b) The local agency has a substantial interest in holding a hearing; or
   (c) An agency with jurisdiction over the proposal (permitting agency) requests a hearing.
2. The Notice of Availability of the DEIS will include the name of the federal lead agency. If there is involvement in floodplains, wetlands, Section 4(f) lands, or endangered species, this information is included in the notice. These notices are printed in the Federal Register by the lead agency. The notice must be published at least 15 days in advance of the public hearing.

Examples of notification methods are publishing a notice in a newspaper of general circulation in the general geographic area of the proposal; notifying private groups that are known to be interested in a certain proposal; contacting news media; and placing notices in appropriate regional, neighborhood, or ethnic periodicals. The notice should be published at least 30 days in advance of the public hearing. During this period, the DEIS is open to consideration and comment.

The DEIS notice of availability describes the following elements:

- location of project
- brief description of work
- purpose of statement
- responsible agency
- where documents are available
- where to send comments

.39 Final Reports and Approvals.

a. Final Recommendation. The local agency reviews comments from the hearings and those received from evaluation of the DEIS, and prepares a hearing summary that it submits to the Regional TransAid Engineer for review.

The local agency then analyzes and coordinates comments on the DEIS with the IDT and prepares a final recommendation. The final recommendation contains a description of the preferred alternative, identifies any significant adverse impacts, the proposed measures to minimize harm, and any monitoring or enforcement programs required to ensure implementation of mitigation measures. The local agency submits this recommendation with appropriate comments to the Regional TransAid Engineer for review.

b. Final Environmental Impact Statement (FEIS). The local agency prepares the FEIS, coordinates preparation and processing procedures with the Regional TransAid Engineer, and submits the FEIS to the Regional TransAid Engineer. The FEIS contains the local agency's final recommendation for the preferred alternative, evaluates all reasonable alternatives considered, discusses substantive comments received on the DEIS, summarizes citizen involvement, and describes procedures required to ensure that mitigation measures are implemented. The FEIS also documents compliance with environmental laws and executive orders.

Three optional approaches to preparing an FEIS are possible:

1. The Traditional Approach incorporates the DEIS essentially in its entirety, with changes made as appropriate throughout the document to reflect the selection of the preferred alternative, modifications to the project, updated information, changes in the assessment of impacts, selection of mitigation measures, wetland and floodplain findings, the results of coordination, comments on the DEIS, and the responses to those comments.

2. The Condensed Final EIS avoids repetition of material by incorporating the DEIS by reference. It should present a complete overview of the project and its impacts on the environment. Its focus is on changes in the project, its setting, impacts, technical analysis, and mitigation since circulation of the DEIS. As above, it must include identification of the preferred alternative, coordination efforts, appropriate findings, comments, and their responses.

3. The Abbreviated Version of the FEIS can be used where the only changes needed in the document are minor and consist of factual corrections or an explanation of why comments on the DEIS do not warrant further response. This FEIS would consist of errata sheets making corrections, a section identifying the preferred alternative, any appropriate findings, a list of commitments for mitigation measures for the preferred alternative, and copies or summaries of the comments received and their responses.

For further information about the choice of FEIS approaches, consult the *Environmental Procedures Manual*, M 31-11, and FHWA Technical Advisory T 6640.8A.

The WSDOT Environmental Affairs Office will coordinate circulation of the preliminary FEIS for review. Review comments are provided to the local agency for use in revising the FEIS. The WSDOT Environmental Affairs Office reviews the FEIS. The Director, Environmental Services, signs the title page and then obtains approval from the federal lead agency.

The WSDOT Environmental Affairs Office forwards the signed title page to the local agency for insertion into the FEIS. The local agency prints the FEIS and submits it to the Regional TransAid Engineer.

Responsibility for circulation, distribution, and coordination of the FEIS is shared between the local agency and the Environmental Affairs Office. The local agency notifies the public of the FEIS availability in the same manner as for the DEIS (see Section 24.38(b)2, above), except that no comments are solicited. The local agency circulates the FEIS for public review to any person, organization, or agency that submitted substantive comments, any agency authorized to issue permits, and public institutions. The TransAid Engineer will coordinate with the WSDOT Project Development Office and FHWA to ensure that circulation of the FEIS is accomplished in accordance with federal and state requirements.

When the use of a Section 4(f) property is identified after the FEIS has been processed, a separate Section 4(f) Evaluation is prepared, circulated for comment, and finalized.

c. Final Section 4(f) Evaluation. When the selected alternative involves the use of Section 4(f) property, a Section 4(f) Evaluation is included as a separate section in the FEIS. The final 4(f) Evaluation contains:

1. All information required for a draft Evaluation found in Section 24.37d.

2. A discussion supporting a conclusion that there are no feasible and prudent alternatives to the use

of the Section 4(f) property. The discussion must demonstrate that there are unique problems or unusual factors involved in the use of any alternatives that avoid these properties, or that the costs of these alternatives in terms of finances, social, economic, environmental impacts, or community disruption resulting from such alternatives would be extraordinary.

3. A discussion documenting that the proposed action includes all possible measures to minimize harm to the Section 4(f) property.

4. A summary of the formal coordination with the Department of the Interior and, as appropriate, the U.S. Departments of Agriculture and Housing and Urban Development.

5. A copy of the Memorandum of Agreement with the Council on Historic Preservation when historical or archaeological lands are involved.

6. Copies of all formal comments received and responses to questions.

7. Concluding statement, "Based upon the above considerations, it is determined that there is no feasible and prudent alternative to the use of land from the Section 4(f) property and that the proposed action includes all possible planning to minimize harm to the Section 4(f) property resulting from such use."

d. Record of Decision (ROD). This document is prepared by the local agency in draft form. The local agency submits the draft ROD with the preliminary final EIS. The ROD accompanies the FEIS through the review and approval process. The ROD includes the information required by Section 1505.2 of the CEQ Regulations.

The following format is used:

1. Decision. Identify the selected alternative. Reference to the FEIS may be used to avoid repetition.

2. Alternatives considered. Briefly describe each alternative (with reference to the FEIS, as above) and explain the balancing of values underlying the decision. Economic, environmental, safety, traffic service, community planning, and other factors have different values and may be given different levels of importance. Identify the reasons why some values were considered to be more important than others. Describe the manner in which these values were considered in arriving at the decision. Identify the environmentally-preferred alternative or alternatives. Where the selected alternative is other than the environmentally preferable alternative, the ROD should clearly state the reasons for not selecting the environmentally preferable alternative. In addition, if Section 4(f) property is used, summarize the Section 4(f) Approval.

3. Measures to minimize harm. Describe all measures to minimize environmental harm that have been adopted for the proposed action. State whether all practicable measures to minimize environmental harm have been incorporated into the decision and, if not, why.

4. Monitoring or enforcement program. Describe any monitoring or enforcement program that has been adopted for the specific mitigation measures, as outlined in the FEIS.

5. Commitment list. Include an item-by-item list of commitments and mitigation measures from the commitment file. The list serves as a ready reference for the design, construction, and maintenance of the project.

24.4 Procedures for Class II Projects

The activities described in this section are summarized on the flow charts for Class II projects. There are three flow charts depicting the three subcategories described in Section 24.22:

- Projects Not Requiring Documentation for FHWA Approval
- Projects Requiring Documentation Without Further FHWA Approval
- Projects Requiring Documentation and FHWA Approval (Documented CE)

If any CE project affects Section 4(f) properties, the project is a "Projects That Require Documentation and FHWA Approval." A separate Section 4(f) Evaluation is required as outlined in Section 24.37 d. Supporting documentation must also be prepared for CE projects that may affect wetlands, farmlands, flood plains, or cultural resource properties. An example illustrating this case is a bridge replacement on existing alignment that requires a construction detour across wetlands.

When submitting the project design to the approving authority, the local agency will verify projects identifed in subcategory "Projects Requiring Documentation and FHWA Approval" that have received FHWA CE concurrence. The design transmittal must include the date of FHWA concurrence.

24.5 Procedures for Class III Projects

The activities described in this section are summarized on the flow chart for Class III projects contained in Section 24.23.

.51 Appointment of Disciplines and Project Manager. After authorization of preliminary engineering funds, the local agency appoints experts in various disciplines to conduct all studies necessary for EA preparation and appoints a PM to be responsible for development of the project. These projects do not require a formal IDT but must use an interdisciplinary approach for the needed investigations.

.52 Coordination. The local agency coordinates with affected federal, state, and local agencies, Indian tribes, interest groups, and the public in determining the scope of the action, alternatives to be considered, and the issues to be addressed. The PM is responsible for the coordination. During the early coordination process, FHWA, in cooperation with TransAid and the local agency, requests that other involved agencies become cooperating agencies. By law, federal agencies having jurisdiction or special expertise must become cooperating agencies when requested. FHWA normally initiates contact with other federal agencies. FHWA may direct the local agency to contact state or other local agencies. The local agency makes these requests in writing and sends a copy to the Regional TransAid Engineer.

.53 Data Collection, Inventory, and Evaluation. The various discipline representatives conduct studies to assess the project's social, economic, and environmental impacts. The depth of a study varies with the magnitude of the proposal. Generally, discipline studies for an EA are developed using the same method outlined in Section 24.21 for EIS projects. Studies are carried out to the point where the extent of environmental impact can be determined. If significant impacts are found during the EA, an EIS is required.

.54 Public Involvement. The local agency conducts public meetings, mails notices, and uses other methods appropriate to the magnitude of the project to provide and obtain information. Public involvement methods are discussed in Section 24.38.

.55 Reports and Recommendations.

a. Discipline Reports. Refer to Section 24.37.

b. Environmental Assessment. The local agency prepares a preliminary Environmental Assessment (EA) in accordance with the EA outline in WSDOT's *Environmental Procedures Manual*. Include an area map, vicinity map, site plan, photogrammetric maps (to depict the environmental setting), discipline reports, and any letters demonstrating coordination of environmental concerns, such as endangered species listings, prime and unique farmland determinations, archaeological/historic reports, etc. If the project involves the use of Section 4(f) properties, a separate 4(f) Evaluation is required and is included as a separate section in the EA.

The preliminary EA and draft Section 4(f) Evaluation are submitted to the Regional TransAid Engineer. (Contact the Regional TransAid Engineer for number of copies to be submitted.) The WSDOT Environmental Affairs Office will coordinate their circulation.

If reviewers determine that the proposal may have significant environmental impacts, an EIS is required.

If no significant impacts are found, the WSDOT Environmental Affairs Office returns the preliminary EA, with comments, to the local agency for revisions.

The local agency submits the revised EA, with the original cover sheet signed by the local official, to the Regional TransAid Engineer. WSDOT approves the EA by signing the cover sheet and forwarding it to the federal lead agency for approval. Once signed by the federal official, the original cover sheet is returned to the local agency for reproduction and binding with the EA.

A notice announcing the availability of the EA is published by the local agency in a newspaper of general circulation. The local agency then coordinates with WSDOT the circulation of the approved EA to affected individuals, interested parties, and local, state, and federal agencies with jurisdiction.

If Section 4(f) property is involved, the document is also circulated to the Department of the Interior. If historic or archaeological lands are involved, the document is also circulated to the State Historic Preservation Officer (SHPO).

When the period for public availability of the EA has ended, the local agency evaluates all comments received, including comments from public hearings (if held), meetings, and open houses. The local agency responds to the comments and revises the document as necessary. If comments are minor, the local agency may issue an addendum referencing changes to the EA.

The final EA, Notice of Availability, and Affidavit of Publication are submitted to the Regional TransAid Engineer with a request for a Finding of No Significant Impact (FONSI). After FHWA issues the FONSI, the WSDOT Environmental Affairs Office returns the signed FONSI to the local agency.

.56 Hearing and Notices. Class III projects require a hearing if: (1) there is substantial controversy; (2) the local agency wants a hearing; or (3) an agency with jurisdiction requests one. For additional information, refer to Section 24.38.

Class III projects normally have less potential for environmental impacts and public controversy than Class I projects, and consequently are less apt to require public hearings. Prepare the EA in advance of any public hearing. The public hearing notice follows the format and time schedule outlined in Section 24.38. The notice of public hearing published in local newspapers should announce that the EA is available and where it can be obtained or reviewed.

Even when a hearing is not required, the local agency will publish a notice in the local newspaper (similar to a public hearing notice) advising the public that the EA is available for review and comment and noting where the document may be obtained. The public review and comment period for an EA is 30 days. If a Section 4(f) Evaluation is included, a 45-day public review and comment period is required.

The local agency notifies the Planning and Community Affairs Agency (Statewide Clearinghouse) via letter that an EA and FONSI are available from the agency or the federal lead agency.

24.6 Project Reevaluation

Whenever single or cumulative conditions have occurred that might cause new or more severe environmental impacts, the local agency shall reevaluate an environmental document.

A **written** reevaluation is required when any of the following conditions exist:

1. An acceptable FEIS has not been submitted to FHWA within three years from the date of the DEIS circulation.
2. Major steps to advance the project (such as approval to acquire a substantial portion of the right-of-way, or approval of PS&E) have not occurred within three years of FEIS approval or supplemental FEIS approval.

The local agency reevaluates the project by conducting appropriate environmental studies or, if necessary, by preparing an EA. The reevaluation is submitted in written form to the Regional TransAid Engineer.

If the reevaluation identifies changes in the proposed project, the affected environment, the anticipated impacts, or the proposed mitigation measures, which result in significant impact that were not evaluated in the original EIS, a new or supplemental document is prepared and circulated. Other types of changes including those which substantially reduce the project's impacts, do not require the preparation of a supplement. For additional guidance on project reevaluations, refer to 23 CFR 771 and WSDOT's *Environmental Procedures Manual*.

24.7 Project Reviews

.71 References.

a. NEPA Section 1505.2 and 1505.3.

b. 23 CFR 771.109(b).

.72 Definition. Project reviews are procedures for monitoring project development to ensure that environmental commitments are kept and adverse impacts mitigated. Reviews are conducted periodically by responsible local agency or monitoring agency officials throughout the various stages of project development and subsequent maintenance.

.73 Procedures.

a. The local agency ensures that decisions recorded in environmental documents are accomplished in design and construction of projects and maintained or improved upon during the life of the project.

b. The local agency continues to maintain the project environmental commitment file which follows the project through design, right-of-way acquisition, PS&E, construction, and maintenance.

c. During construction, the local agency implements and monitors the adopted impact mitigation measures to ensure that they are satisfactorily maintained or improved upon.

d. When unique or unusual mitigation is required, the local agency conducts periodic reviews during construction or maintenance to evaluate the effectiveness of mitigation measures that were incorporated into the construction contract.

e. The local agency must request concurrence from the Regional TransAid Engineer for any significant alterations to mitigation measures agreed to during the environmental process, even when changes are made during construction or maintenance.

f. The local agency makes available progress reports and any results of the impact mitigation measures at the request of the public or agencies.

.74 Commitment File. As an initial part of project development, the local agency establishes a project commitment file. Establishment of this file generally coincides with preparation of the environmental document or could be at later stages as required. The file consists of proposed mitigating measures, commitments made to resource or other agencies with permitting authority, and other commitments made on the project. The file normally consists of design and environmental commitments. Other commitments may be added at the local agency's discretion, such as right-of-way, access, maintenance, permits, and agreements.

The local agency continues to maintain the commitment file as a project progresses through its development process. Whenever commitments are made, they are incorporated into project documents and transferred from one phase of the project to the next. Commitments are normally included or identified in the following documents or actions:

a. Environmental documents.

b. Design reports.

c. Right-of-way plans.

d. Access plans.

e. Findings and order.

f. Contract plans.

g. Preconstruction conference.

h. Change orders.

i. End of project report.

j. Maintenance.

To organize and track commitments made during the development and implementation of a project, a "Record of Commitment," DOT Form 220-021, or similar form may be used.

When a commitment is made, record it on the Record of Commitment form. The form contains the detail necessary to document the commitment, including references to correspondence, agreement numbers, etc.

A commitment may be revised when all parties involved agree to the revision.

Records (forms) on completed commitments should be retained for at least a year after the completion date. Commitments requiring ongoing maintenance need to be retained in the files as long as the commitment is active.

24.8 Appendixes

24.81 Instructions for Completing the Environmental Classification Summary

Forms

WSDOT Form 140-100 Local Agency Environmental Classification Summary

20:P:LAG2D

Instructions for Completing Environmental Classification Summary

The Environmental Classification Summary (ECS) form consists of four parts that are required to be completed. (See LAG Chapter 24.2.)

Part 1 — Project Description

Date Form Revised	Date of latest significant revision to ECS form.
Revision Number	The latest revision number of the approved ECS form. This number applies only to this form and the continuation sheets.
Federal Aid Project Number	See LAG, Appendix 21.43.
Local Agency Project Number	Required and limited to eight (8) alpha/numeric characters.
Federal Program Title	See LAG, Appendix 21.43.
Within Puget Sound Basin	Answer yes if the project is located in any of the following twelve (12) counties: Clallam, Island, Jefferson, King, Kitsap, Mason, Pierce, San Juan, Kitsap, Snohomish, Thurston, or Whatcom.
Water Resource Inventory Area (WRIA) Number and Name	The name and numbers of these areas along with a map are located in WAC 173-500-040.

Part 2 — Permits and Approvals Required

Includes permits and approvals required by a project. Answer yes or no based upon if the particular permit is required or not.

Corps of Engineers Permit

1. Indicate if a Section 404, Section 10 permit or both are required.
2. Indicate if an individual or nationwide permit is required.
   a. If individual, enter permit number if known.
   b. If nationwide, enter the proposed nationwide permit type number. The name and numbers of these nationwide permits are located in Corps. Special Public Notice dated 2/11/92.

(NPDES) Baseline General for Construction — Indicate if Stormwater Site Plan or Temporary Sediment Control Plan (TESC) is required.

Part 3 — Environmental Classification

Includes the classification of the environmental document the proposed action may require. Projects are environmentally classified in both the NEPA and SEPA columns. Indicate by checking the appropriate box for the environmental documentation that will be prepared for the project.

NEPA and SEPA Categorical Exclusion and Exemption Levels — Specify the appropriate subsection the NEPA CE falls under.

Part 4 — Environmental Considerations

Address all fourteen (14) items. In some cases, it may be necessary to indicate "not applicable" (N/A) to some of the items. If the resource is present but no impacts are anticipated, explain in the remarks section.

Approving Signatures

Local Agency Approving Authority	The Local Agency Approving Authority must sign page 3.
Regional TransAid Engineer/ Assistant Secretary for TransAid	The Regional TransAid Engineer or the Assistant Secretary for TransAid, as appropriate, signs page 3.
Federal Highway Administration	As appropriate, is signed by the Federal Highway Administration on page 3.
Completed By	Indicate the name of the staff person who completed the form.

21:P:LAG

Washington State Department of Transportation

Local Agency Environmental Classification Summary

Part 1 Project Description

Summary Type	Date Created	Date Revised	Revision Number
☐ Preliminary ☐ Final			

Federal Aid Project Number	Route	( )	Local Agency Project Number

Agency	Federal Program Title
	☐ 20.204 ☐ 20.205 ☐ 20.206 ☐ 20.209 ☐ Other

Project Title

Begin	End			
MP _____	MP _____	Miles _____	Township _____	
KP _____	KP _____	KM _____	Range _____	

County	Water Resource Inventory Area (WRIA) No. & Name	Within Puget Sound Basin?
		☐ Yes ☐ No

Part 2 Permits and Approvals Required

Yes	No	Permit or Approval
☐	☐	Corps of Engineers ☐ Sec. 10 ☐ Sec. 404
	☐	Nationwide Type _____
	☐	Individual Permit No. _____
☐	☐	Coast Guard
☐	☐	Coastal Zone Management Certification
☐	☐	Critical Area Ordinance (CAO) Permit
☐	☐	Flood Plain Development Permit
☐	☐	Forest Practice Act Permit
☐	☐	Hydraulic Project Approval
☐	☐	Local Building or Site Development Permits
☐	☐	Local Clearing and Grading
☐	☐	Natl. Historic Preservation Act - Section 106
☐	☐	(NPDES) Municipal Stormwater Discharge
☐	☐	National Pollutant Discharge Elimination System (NPDES) Baseline General for Construction
	☐	Stormwater Site Plan
	☐	Temp. Erosion Sediment Control Plan (TESC)

Yes	No	Permit or Approval
☐	☐	Shoreline Permit
☐	☐	State Waste Discharge Permit
☐	☐	Temp. Modification of Water Quality Standards
☐	☐	Section 4(f)/6(f): Wildlife Refuges, Recreation Areas, Historic Properties
☐	☐	Water Rights Permit
☐	☐	Water Quality Certification - Sec. 401
		Issued by _____
☐	☐	Tribal Permit(s), (If any)
		_____
		_____
		_____
☐	☐	Other Permits, including GMA (List):
		_____
		_____
		_____
		_____

Part 3 Environmental Classification

NEPA

- ☐ Class I - Environvental Impact Statement (EIS)
- ☐ Class II - Categorically Excluded (CE)
  - ☐ Projects Not Requiring Documentation for FHWA Approval (LAG 24.22(a))
  - ☐ Projects Requiring Documentation Without Further FHWA Approval (LAG 24.22(b))
  - ☐ Projects Requiring Documentation and FHWA Approval (Documented CE) (LAG 24.22(c))
- ☐ Class III - Environmental Assessment (EA)
- ☐ Supplemental EIS (SEIS)

SEPA

- ☐ Categorically exempt per WAC 197-11-800
- ☐ Determination of Non-Significance (DNS)
- ☐ Environmental Impact Statement (EIS)
- ☐ Other Actions: ☐ Adoption ☐ Addendum

Part 4 Environmental Considerations

Will the project involve work in or affect any of the following? Identify proposed mitigation. Attach additional pages or supplemental information of necessary.

1. Air Quality Identify any anticipated air quality issues.

Is the project included in Metropolitan Transportation Plan? ☐ Yes ☐ No

Is the project located in an Air Quality Non-Attainment Area (for carbon monoxide, ozone, or PM10)? ☐ Yes ☐ No

Is the project exempt from Air Quality conformity requirements? ☐ Yes ☐ No

2. Critical/Sensitive Areas Identify any known Critical or Sensitive Areas as designated by local Growth Management Act ordinances.

a. Aquifer Recharge Area, Wellhead Protection Area, or Sole Source Aquifer.

b. Geologically Hazardous Area

c. Habitat. List known species:

(1) Threatened/Endangered Species or Priority Habitat or Species. Indicate state or federal listing.

(2) General fish and wildlife habitat

d. Wetlands. Estimate impacted categories and acreage:

(1) Are wetlands present? ☐ Yes ☐ No

(2) Estimated area impacted: _____ Acres

3. Cultural Resources/Historic Structures Identify any historic or archaeological resources.

4. Flood Plains or Ways

Is the project located in a 100-year flood plain? ☐ Yes ☐ No

If yes, is the project located in a 100-year floodway? ☐ Yes ☐ No

Will the project impact a 100-year flood plain? ☐ Yes ☐ No

Part 4 Environmental Considerations - Continued

5. Hazardous and Problem Waste Identify potential sources and type.

Is the project likely to involve site clean-up? ☐ Yes ☐ No

6. Noise Identify potential sensitive receptors or previous mitigation commitments.

7. Parks, Recreation Areas, Wildlife Refuges, Historic Properties, or Scenic Rivers/Byways, 4(f)/6(f) Lands. Identify.

8. Resource Lands Identify areas of impact.

a. Agricultural

b. Forest/Timber

c. Mineral

9. Rivers, Streams (Continuous, Intermittent), or Tidal Waters

a. Identify by name, proximity to project and Washington Stream Catalog Number.

Fisheries WA Stream No. _____ Ecology 305b Report No. _____

b. Identify stream crossing structures by type.

Part 4 Environmental Considerations - Continued

10. Tribal Lands Identify.

11. Visual Quality

Will the project impact roadside classification or visual aspects? ☐ Yes ☐ No

12. Water Quality/Storm Water

Is the project likely to increase runoff or affect water quality? ☐ Yes ☐ No

Will the project include water quality/quantity treatment for the new pavement? ☐ Yes ☐ No

Will the project include water quality/quantity treatment for existing pavement? ☐ Yes ☐ No

Has a NPDES municipal general permit been issued for this WRIA? ☐ Yes ☐ No

13. Previous Environmental Commitments

Have provious environmental commitments been made in the project area? ☐ Yes ☐ No

Identify

14. Long-Term Maintenance Commitments

Are long-term maintenance commitments necessary for this project? ☐ Yes ☐ No

Identify

Part 5 Approval Signatures

Local Agency Approving Authority	Date	Regional TransAid Engineer / Asst. Secretary - TransAid	Date
Federal Highway Administration	Date	Completed By Telephone _____ Fax _____	

25.01 General Discussion

Since federal regulations do not allow the certification of right-of-way to be subdelegated, the Washington State Department of Transportation (WSDOT) has overall responsibility to the Federal Highway Administration (FHWA) for the acquisition of right-of-way on all FHWA funded transportation projects in the state.

For a current project to be eligible for federal funding on any part of the project, the project's right-of-way must be acquired in accordance with the requirements of this manual.

To assure fair and equitable treatment of displaced persons ("displacees"), and encourage and expedite acquisitions by negotiations, the acquisition process is regulated by Chapter 8.26 RCW and WAC 468-100.

WSDOT may, by written agreement, use the services of land acquisition organizations of counties, municipalities, or other state or local governmental agencies for acquiring rights-of-way for FHWA projects. Any such organization may be used only if it is adequately staffed, equipped, and organized to provide such services, and if its practices and procedures are in substantial conformity with WSDOT accepted procedures.

It is the responsibility of WSDOT to fully inform political subdivisions of their responsibilities in connection with federally assisted transportation projects. It is essential that local agencies and WSDOT communicate freely and work closely together during the entire acquisition process to expedite projects and to assure that all federal and state requirements are met. Guidance is provided in the WSDOT *Right of Way Manual* (M 26-01).

Responsibilities for non-project related (program) approval actions (FHWA (F), State (S), or Local CA Agency (L)) are shown below.

	Action	Non-NHS
a.	Non-highway Use and Occupancy of Right-of-Way	S/L
b.	Air Space Agreements	S/L
c.	Disposal of Right-of-Way No Longer Needed	S/L
d.	Temporary Use of Right-of-Way	S/L
e.	Disposal of Access Control and Relinquishment of Right-of-Way	S/L

Project related approval actions.

	Action	Non-NHS
a.	Use of Fee Negotiators	S/L
b.	Interest on Right-of-Entry	S/L
c.	Hardship and Protective Buying	F
d.	Use of Fee Attorneys	S/L
e.	Appraisal Fees	S/L
f.	Land Service Facilities	S/L
g.	Right-of-Way Certificates	S/L

.011 WSDOT Services. WSDOT is committed to an ongoing program which will provide effective assistance and guidance to local acquiring agencies. To this end, WSDOT will designate a Local Agency Right-of-Way Coordinator (LA Coordinator) in each region to provide information and establish appropriate state staff contacts; provide training and educational opportunities for local agencies through workshops and acquisition course offerings; and provide mutually acceptable technical and advisory services as necessary to accomplish the acquisition program.

WSDOT will consult and advise the local agency concerning real property acquisition activities to ensure that right-of-way is acquired in accordance with provisions of state and federal laws and FHWA directives.

At the earliest possible date, the local agency should advise the Region LA Coordinator of the need for WSDOT assistance. If WSDOT is asked to perform the appraisal, negotiation, or relocation functions, the local agency should obtain the estimated cost of such assistance from the Region LA Coordinator and include it in the Local Agency Agreement. The Coordinator will arrange for the preparation of an agreement if WSDOT has the personnel available to acquire the necessary right-of-way (Appendix 25.141). WSDOT will furnish the local agency with an estimate of the cost of WSDOT's services.

When WSDOT provides these services, WSDOT will prepare all necessary documentation and certification.

.012 Consultant Services. When the local agency does not have adequate staff to perform appraisal, negotiation or relocation functions, it may contract for these services and obtain federal participation in the costs.

The local agency should contact the Regional TransAid Engineer for assistance in preparing any contract for services to assure FHWA participation in the contract. FHWA has determined the consultant agreements for right-of-way services must meet the consultant contracting requirements as those described in Chapter 31 "Using Consultants." **Except if there is federal participation in**

the acquisition phase of a project, all contracts concerning real property acquisition must be approved by WSDOT through the Region LA Coordinator *prior* to execution by the agency. See Chapter 31 Appendixes for sample consultant agreements for appraisal and negotiation.

25.02 Right-of-Way Acquisition Procedures

Before requesting authority to acquire right-of-way, the local agency must have secured approval of acquisition procedures (Appendix 25.142). Acquisition procedures are submitted to the Regional TransAid Engineer for review prior to final execution by the local agency. TransAid forwards the procedures through the Region LA Coordinator for approval. The local agency will be approved to acquire right-of-way based upon the submitted procedures. The level at which an agency will be approved will be dependent upon the agency's staff qualifications. An agency with minimal staff may be approved to acquire a single project with direct supervision by the Region LA Coordinator. TransAid notifies the local agency of the approval, with a copy to the Region LA Coordinator. Periodic reviews of procedures will be conducted on agency's acquiring right-of-way on federal aid projects. Procedures should include the following:

a. Agreement to conform with state and federal laws and FHWA regulations. The agency should agree to follow the state's *Local Agency Guidelines Manual (M 36-63*) and *Right-of-Way Manual (M 26-01)* or the agency's own manual if they have a WSDOT approved right-of-way manual.

b. A listing of the positions performing the separate functions of program administration, appraisal, appraisal review, acquisition, relocation, and property management.

c. A listing of current staff filling the above positions and a brief statement of their qualifications.

d. A policy for handling administrative settlements including the approving authority(s) and process.

e. Appraisal waiver process (see Section 25.051)

.021 No Right-of-Way Acquisition. Local agencies, after determining that new right-of-way will not be required for the current project, need only check the appropriate box on the project prospectus (see Chapter 21). If it is later determined that right-of-way is required, a Right-of-Way Project Funding Estimate (Appendix 25.143) or a True Cost Estimate (Appendix 25.144) must be prepared and TransAid and the Region LA Coordinator notified.

.022 Acquiring Right-of-Way. Acquisition of right-of-way may be performed by the following entities:

- By WSDOT on a local agency's behalf. In this case, an agreement between WSDOT and the local agency will be prepared and approved by the Director of Real Estate Services.
- By a local agency that is adequately staffed, equipped, and organized to discharge its right-of-way responsibilities and has right-of-way procedures approved by WSDOT. Staff may consist of qualified contract personnel and/or licensed private firms (see RCW 18.85.010) in addition to or in lieu of regular employees of the agency.
- By another local agency that meets the requirements above.

25.03 Voluntary Acquisition

An agency with approved right-of-way acquisition procedures may choose to acquire property using the voluntary acquisition process set forth in 49 CFR 24.101(a)(2). To qualify for this process, the agency must choose **not** to use their eminent domain authority and:

a. Clearly advise the property owner, in writing, prior to making an offer that the agency will be unable to acquire the property in the event that negotiations fail.

b. Provide the owner with an estimate of the fair market value of the property.

c. Provide relocation assistance to any tenant(s).

If an agency chooses to use this method of acquisition, the federal regulations will not apply to the acquisition process except as mentioned above**.**

In the event that any parcel on the project can not be purchased voluntarily, the entire project must then be purchased using all applicable federal regulations.

25.04 Funds for Right-of-Way

.041 Acquisition With Federal Funds. Authorization of federal funds for right-of-way requires compliance with Chapter 12 and the submittal of the following documents to the Regional TransAid Engineer.

- Estimate of probable project costs and expenses broken down by parcel. The True Cost Estimate (Appendix 25.144) can be used when all parcels are to be appraised or donated. The Right-of-Way Project Funding Estimate must be used if the agency wishes to make use of the appraisal waiver process (see Section 25.051).
- Right-of-Way plan.
- Relocation plan (if relocation is required — contact the LA Coordinator for assistance).

The right-of-way plans should at least show the following information and meet the requirements of WAC 332-130:

- Survey line or centerline for the alignment;
- The old and new right-of-way limits with sufficient ties to the survey line to allow for legal descriptions of the areas to be acquired;

- Show all rights to be acquired, for example, easements and permits;
- Show the ownership boundaries of the parcels with rights to be acquired;
- Parcel identification numbers should be shown;
- Dual units if the project utilizes metric units;
- Show the area of the parcel to be acquired; and
- Show the area of the remainder.

All plan sheets shall carry the seal and signature of a registered Professional Engineer or land surveyor in accordance with RCW 18.43.070 and RCW 58.09. If the plan makes a land boundary determination, it should be approved by a PLS.

Once FHWA approval has been obtained, the Assistant Secretary for TransAid will notify the local agency of authorization to acquire right-of-way. No acquisition costs are eligible prior to this authorization.

.042 Acquisition With Local Agency Funds. For projects that involve local agency funds only for right-of-way acquisition, the relocation plan (if required) must be submitted to the Regional TransAid Engineer. The local agency need not wait for written authorization to acquire right-of-way. **However, if federal funds are to be used in any part of the project, federal guidelines must be followed in the acquisition of the right-of-way.**

A copy of the right-of-way plan must be made available at the time of certification. It is advisable, but not required, to submit a copy to the Regional TransAid Engineer. This review will minimize potential problems which surface during the certification process.

25.05 Appraisal

The requirements pertaining to appraisal of property to be acquired are given in Chapter 4 of the WSDOT *Right of Way Manual*, M 26-01. If desired, a listing of WSDOT approved fee appraisers and appraisal reviewers is available from the Region LA Coordinator.

The appraiser shall be an experienced, qualified appraiser. As a minimum, an appraiser should have a college degree or four years of active experience in the real estate field leading to a basic knowledge of real property valuation, or any combination of such experience and college study to provide a total of four years beyond high school graduation. An appraiser who is qualified under WSDOT criteria will be considered qualified for FHWA projects. For FHWA projects subsequent to July 1, 1991, the appraiser must be certified per RCW 18.140 if the appraisal problem requires more than the comparative approach to value.

The appraiser shall prepare an Appraisal Report which is a written document containing at least the following:

a. The purpose of the appraisal which includes a statement of the estimated value and the rights or interests being appraised.

b. Identification of the property and its ownership.

c. A statement of appropriate contingent and limiting conditions if any.

d. An adequate description of the neighborhood, the property, the portion of the property or interest therein being acquired, and the remainder(s) if any.

e. Identified photographs of the property including all principal above-ground improvements or unusual features affecting the value of the property.

f. A listing of the buildings, structures, fixtures, and other improvements which the appraiser considered part of the real property to be acquired.

g. The estimate of just compensation for the acquisition. In the case of a partial acquisition, allocate the estimate of just compensation for the property to be acquired and for damages to remaining property in either the report or a separate statement.

h. The data and analyses (or reference to same) to explain, substantiate, and document the estimate of just compensation.

i. The date to which the estimate of just compensation applies.

j. The certification, signature, and date of signature of the appraiser.

k. Other descriptive material (maps, charts, plans, photographs).

l. The federal aid project number and parcel identification.

m. Report of appraiser contact with owner.

Sample appraisal report forms can be found in Appendix 25.145.

.051 Appraisal Waiver. In certain cases, an appraisal can be waived. To qualify the just compensation, based on the Right-of-Way Project Funding Estimate or its equivalent, must be $5,000 or less per parcel. The acquisition must be uncomplicated and the only damages will be minor cost to cure items. In addition up to an additional $10,000 per parcel can be included for documented, reasonable cost to cure items limited to fencing, utility rehabilitation, on premise sign relocation (not billboards), and driveway rehabilitation.

In such instances where the appraisal is waived, just compensation should be based on comparable sales. All data used to arrive at just compensation must be included in the project file. When the waiver is used, it is important that the local agency determines that the offer being made is fair and equitable. The owner must be informed that an appraisal was not done. If the owner wants an appraisal,

the local agency is required to have an appraisal completed per guidelines of this section. See Appendix 25.146 for a sample appraisal waiver procedure.

.052 Appraisal Review. The requirements pertaining to appraisal review of the property to be acquired is given in Chapter 5 of the WSDOT *Right of Way Manual*, M 26-01.

The reviewing appraiser should be knowledgeable of the property values in the project area. The depth of review should be in direct relationship to the difficulty of the particular appraisal. The reviewing appraiser must be either a WSDOT Review Appraiser, on the approved list of review appraisers maintained by WSDOT or a permanent employee of the acquiring agency who is authorized by the approved right-of-way procedures to review appraisals. For agency staff to qualify as a review appraiser, an individual must have a minimum of five years of full time narrative real estate appraisal report writing experience, two years of which must be with eminent domain appraisals, or have at least six months experience as a review appraiser for either WSDOT or FHWA.

The reviewing appraiser should field inspect the property appraised as well as the comparable sales which the appraiser(s) considered in arriving at the fair market value of the whole property and of the remainder(s), if any. If a field inspection is not made, the file shall contain the reason(s) why it was not made.

The reviewing appraiser shall examine the Appraisal Reports to determine that they:

a. Are complete in accordance with the *Local Agency Guidelines* and contain the criteria required by the WSDOT *Right of Way Manual*, Chapter 4, Appendix 4-1 (Appraisal Guide).

b. Follow accepted appraisal principles and techniques in the valuation of real property in accordance with existing state law.

c. Include consideration of compensable items, damage, and benefits, but do not include compensation for items noncompensable under state law.

Prior to finalizing the estimate of just compensation, the reviewing appraiser shall obtain corrections or revisions of Appraisal Reports which do not substantially meet the requirements set forth in the *Local Agency Guidelines*. These shall be documented and retained in the parcel file.

The reviewing appraiser may supplement an Appraisal Report with corrections of minor mathematical errors as long as such errors do not affect the final value conclusion. The reviewer may also supplement the appraisal file where the following factual data have been omitted:

a. Project and/or parcel number.

b. Parties to transaction, date of purchase, and deed-book reference to sale of subject property and comparables.

c. Statement that there was no sale of subject property in the past five years.

d. Location, zoning, or present use of subject property or comparables.

The reviewing appraiser shall initial and date corrections and/or factual data supplements to the Appraisal Report. The reviewing appraiser may conclude a value other than that concluded in the appraisal only if the conclusion is supported by relevant market data and analysis in the review document.

The reviewing appraiser shall place in the parcel file a signed and dated statement (Appendix 25.147) setting forth:

a. An estimate of just compensation including, where appropriate, the allocation of compensation for the property acquired and for damages to remaining property.

b. A listing of the buildings, structures, fixtures, and other improvements on the land which were considered part of the property to be acquired.

c. A statement that the reviewing appraiser has no direct or indirect present or future interest in such property or in any monetary benefit from its acquisition.

d. A statement that the estimate has been reached independently, without collaboration or direction, and is based on appraisals and other factual data.

It is the responsibility of the **agency** to set Just Compensation. This can be accomplished by adding a line to the bottom of the review appraiser's certificate as shown in Appendix 25.147.

25.06 Title

The agency will acquire evidence of the condition of title for all properties from which rights are to be acquired. It is suggested that a title report be ordered from a title company and the title to the property acquired cleared so that a policy of title insurance can be issued showing title vested in the agency subject only to those exceptions which can reasonably be accepted. If a title company is not used to provide this information, the acquisition file must include sufficient documentation to validate the signatories on the instruments and show that the interest acquired is free from unreasonable encumbrances.

In general, the elements necessary to acquire the needed interest are:

a. Acquisition instruments signed by all parties with an interest in the fee title.

b. Releases from mortgages and deeds of trust as the agency determines to be reasonable.

c. Releases of encumbrances, such as easements, which adversely impact the rights being acquired.

d. Releases of priority liens, such as material man's lien, judgments, state tax liens, and federal tax liens.

25.07 Negotiations

Various requirements in negotiating an acquisition of property are found in Section 3-4.1C of WSDOT *Right of Way Manual*, M 26-01.

If a local agency uses a consultant fee negotiator, the negotiator must meet the applicable state licensing requirements (verify with the Department of Licensing). **And if federal funds are used in the acquisition phase of the project, the contract must be approved by WSDOT through the LA Coordinator prior to execution by the local agency.**

For local agency staff to be approved to acquire property without direct supervision by the LA Coordinator, they must have either an Associate Degree in real estate or a Bachelor Degree or equivalent experience. In addition, they must have two years full time experience in real estate acquisition, sales leasing, appraisal, title, escrow or property management. One year of experience must be in eminent domain acquisition. Additional experience in eminent domain acquisition can replace education on a one for one basis.

Local agencies using staff to negotiate who do not have the necessary qualifications must work closely with the LA Coordinator as explained in the Procedures Approval letter. At a minimum, all offers must be reviewed before presenting them to the property owner.

A separation of functions maintains the integrity of the acquiring agency's transactions. Thus, the appraisal, appraisal review, and negotiations for a parcel are performed by three different persons. Recognizing the fact that the use of two separate individuals as appraiser and negotiator on a low-value taking can be both difficult and expensive, the use of a single individual to both appraise and negotiate a parcel is permitted where the value of the acquisition is $2,500 or less. It should be noted that the appraisal shall be reviewed prior to negotiations, and the review appraiser shall be neither the appraiser nor the negotiator.

Before initiating negotiations for real property, the agency shall establish the just compensation which shall not be less than the approved appraisal of the property and shall make an offer to acquire in that amount. Appraisals are not required if the owner has indicated a willingness to donate the right-of-way after being informed of their right to receive just compensation.

A donation may be accepted only after the owner has been informed in writing of their right to just compensation. This applies to individuals, businesses, corporations, and other private entities. Donations from government agencies are exempt from these requirements.

Right-of-way obtained through normal zoning, subdivision or building permit procedures requiring the donation or dedication of strips of land may be incorporated into a federal aid project without jeopardizing participation in other project costs.

The agency must make available to the property owner a statutory evaluation allowance not to exceed $200 to help defray the owner's expenses actually incurred in evaluating the agency's offer. This allowance does not qualify for federal reimbursement (RCW 8.25.020).

When negotiations are complete, the negotiator shall keep in the project file a signed statement for each parcel that:

a. The written agreement embodies all considerations agreed to by the negotiator and the property owner.

b. The negotiator understands that the acquired property is for use in connection with a federal aid transportation project.

c. The negotiator has no direct or indirect interest in the property or in any monetary benefit from its acquisition, at present or in the future.

d. The agreement has been reached without any type of coercion.

.071 Negotiations by Mail. If no relocation is involved, the local agency may conduct right-of-way negotiations as follows:

a. Mail to the owner the fair-offer letter, a summary statement (explains nature of acquisition, conditions affecting remainder after construction, and other pertinent details which would have been explained in a face-to-face meeting with owner), the document of acquisition (deed, easement, or other document required for signature), property plat or sketch showing take and effects on remainder, and a copy of the acquisition brochure.

b. Within about two weeks, make a follow-up phone call (documented in file). Answer questions or, if owner requests it, make an appointment for personal contact.

c. Follow normal procedures for further negotiations.

25.08 Donated Property

Section 323 of 23 U.S.C. provides for using the value of donated lands as part of the match against an agency's contribution to the project. Certain conditions need be met.

- The credit can only be applied to a federal aid project financed out of the Highway Trust Fund.
- The donation must be related to the project and requiring the donated land.
- Only donations made after April 2, 1987, are eligible for credit purposes.
- NEPA requirements have been met. If a donation is made prior to NEPA requirements being met, it may not be accepted as a donation prior to the approval of the environmental document.
- There are different procedures governing the establishment of value and date of valuation than those one would use in a normal eminent domain valuation situation.

- Donations made by a federal, state, or local governmental agency are not eligible for project credit purposes.
- Credit to the matching share may not exceed the matching share of costs for that project and excess credits may not be utilized on other projects.

For sample donation letters, see Appendix 25.148.

25.09 Administrative Settlements

The Uniform Act requires that "The head of a federal agency shall make every reasonable effort to expeditiously acquire real property by negotiation." Negotiation implies an honest effort by the acquiring agency to resolve differences with property owners. Additionally, the legislative history of the Uniform Act indicates that offers can be flexible, and there is no requirement that they reflect a "take it or leave it position." Negotiations should recognize the inexact nature of the process by which just compensation is determined. Further, the law requires an attempt by agencies to expedite the acquisition of real property by agreements with owners and to avoid litigation and relieve congestion in the courts.

In addition to the mandates of the Uniform Act, there are significant cost savings which can be realized through an increased use of administrative and legal settlements. Cost savings are in the areas of salaries, witness fees, travel, per diem, court costs, etc.

FHWA and WSDOT encourage local agencies to carefully consider and maximize use of administrative settlements in appropriate situations.

An administrative settlement or stipulated settlement is a negotiated settlement of a right-of-way acquisition case in which the agency has administratively approved payment in excess of fair market value as shown on the agency's approved determination of value.

a. Any administrative settlement which exceeds the fair market value must be documented and thoroughly justified in order to be eligible for federal aid funds. The rationale for the settlement shall be set forth in writing. The extent of written explanation is a matter of judgment and should be consistent with the circumstances and the amount of money involved. If the local agency has any doubt as to eligibility, it should obtain prior approval from WSDOT through the Region LA Coordinator.

b. The local agency shall document the following and make it available for review by WSDOT if it is not already part of the agency's approved procedures:

   1. Identify the responsible official who has the authority to approve administrative settlements, and

   2. Describe the procedure for handling administrative settlements.

c. The designated local agency representative may approve an administrative settlement when it is determined that such action is in the public interest. In arriving at a determination to approve an administrative settlement, the designated official must give full consideration to all pertinent information including, but not limited to, the following:

   1. All available appraisals, including the owner's, and the probable range of testimony in a condemnation trial.

   2. Ability of the agency to acquire the property, or possession, through the condemnation process to meet the construction schedule. Impact of construction delay pending acquisition.

   3. The negotiator's recorded information.

   4. Recent court awards in cases involving similar acquisition and appraisal problems.

   5. Likelihood of obtaining an impartial jury in local jurisdiction, opinion of legal counsel where appropriate.

   6. Estimate of trial cost weighed against other factors.

25.10 Relocation

The regulations governing relocation assistance are covered in Title 49, Code of Federal Regulations, Part 24.

The majority of local agencies will find that it is not economically feasible to maintain staff to perform the relocation function. Those agencies who have trained staff and are approved by WSDOT through the procedures process to provide relocation services may do so. All other agencies should contact their Region LA Coordinator for help in having WSDOT contract to provide relocation services or for advice on contracting with private consultants. WSDOT does not maintain a list of qualified relocation consultants.

If a project includes relocation, a relocation plan must be submitted prior to right-of-way funding authorization. Since relocation plans are unique to each project requiring them, no sample is provided. Contact the Region LA Coordinator for assistance in preparing relocation plans and carrying out relocation activities.

25.11 Right-of-Way Certification

After right-of-way acquisition has been completed and before the federal aid project has been advertised for contract, a certificate must be submitted to the Regional TransAid Engineer.

There are three categories of certifications.

#1 **All Right-of-Way Acquired.** Legal possession has been obtained but trial or appeal of cases may be pending. All occupants have vacated the right-of-way and the agency has the right to remove any remaining improvements. (Appendix 25.149)

#2 **Right to Occupy All Right-of-Way Acquired.** Trial or appeal of some parcels may be pending and some parcels may have right of entry or possession and use only. All

occupants have vacated the right-of-way and the agency has the right to remove any remaining improvements. (Appendix 25.150)

#3 **All Right-of-Way Not Acquired.** *This certification is to be used only in very unusual circumstances and with prior approval of the LA Coordinator*. Acquisition of a few remaining parcels is not complete. All occupants of residences have had replacement housing made available to them in accordance with 49 CFR 24.204. The agency must adequately explain why construction of the project before acquisition is complete, is in the public good. The agency will ensure that occupants of residences, businesses, farms or nonprofit organizations who have not yet moved from the right-of-way are protected against unnecessary inconvenience or coercive action. All unacquired parcels will be identified and a realistic date given for completion of acquisition and relocation. An explanation of why the properties are not acquired and how they will be acquired by the given date is also required. Appropriate notification will be provided in the bid proposals identifying all locations where acquisition is not complete. (See Appendix 25.151)

Certifications with exception must be followed by a certification without exception when possession of all parcels is obtained.

The certificate is submitted to the Regional TransAid Engineer about one month before the proposed contract advertising date. The TransAid Engineer will submit the certification request to the Regional Real Estate Services Manager for the federally mandated certification review. The Region LA Coordinator will visit the local agency and review the acquisition files for the project and determine if the right-of-way was acquired according to the guidelines. For a copy of the coordinators' worksheets and a Federal Aid Requirement Checklist showing the general areas reviewed by the coordinator, see Appendixes 25.152 and 25.153.

If the coordinator determines that the project is ready for certification, they will have the Real Estate Services Manager sign the certification form and return it to TransAid for inclusion in the package to be transmitted to Olympia Service Center TransAid for final processing. The coordinator will also provide the agency and Regional TransAid with a letter detailing the findings of the review and any deficiencies that may have been noted.

If the coordinator determines that the project cannot be certified, a letter will be provided to the agency and the Regional TransAid office detailing the deficiencies encountered and the corrective action required before certification can be completed.

25.12 Property Management

If using FHWA funding, the acquiring agency shall establish property management policies and procedures that will assure control and administration of excess lands and improvements acquired for right-of-way purposes. These procedures shall establish:

a. Property records showing:

   1. An inventory of all improvements acquired as a part of the right-of-way;
   2. An accounting of excess properties acquired with FHWA funding;
   3. An accounting of the property management expenses and the rental payments received; and
   4. An accounting of the disposition of improvements and the recovery payments received.

b. Methods for accomplishing the clearing of right-of-way when such clearance is performed separately from the control for the physical construction of the project.

c. The methods for managing the rodent control program.

d. The methods for employing private firms or public agencies for the management of real property.

e. The methods for accomplishing the disposition of improvements through resale, salvage, owner retention, or other means.

If the agency permits an owner or tenant to occupy the real property acquired on a rental basis for a short term or for a period subject to termination by the agency on short notice, the amount of rent required shall not exceed the fair rental value of the property to a short-term occupier.

Property management activities shall be handled in a manner consistent with the public interest and designed to reflect the maximum long-range public benefit.

The agency is responsible for the preservation of the improvements and for reasonable safety measures when it has acquired ownership and possession of the property.

Should rights-of-way acquired with FHWA funds become excess, they may be disposed of only after FHWA approval. If the disposal is to a private party, the agency must determine fair market value (either through the appraisal process or by public sale), and credit FHWA for its share of the net proceeds of the sale if federal funds participated in acquisition costs. A disposal may be made to a governmental agency for a public use without charge, and no credit to FHWA is required.

Uneconomic remnants acquired by the agency with federal funds but not incorporated into the right-of-way may be disposed of without FHWA approval, but a credit to FHWA is required in the same manner as described earlier in this section.

Disposition of property outside of right-of-way and valued at $1,000 or less is allowed without credit to federal funds. FHWA will not participate in the local agency costs of the disposal.

Federal regulations provide for the use of airspace for non-highway purposes above, at, or below the highway's established gradeline, lying within the approved right-of-way limits. The airspace may be put to various public and private uses, such as parks, play areas, parking, etc., as long as it is a proper operation and does not impose a safety hazard on the traveling public.

Where an acquiring agency has acquired sufficient legal right, title, and interest in the right-of-way of a highway on a federal aid system to permit the use of certain airspace, the right to temporary or permanent occupancy or use of such airspace may be granted by the state subject to prior FHWA approval.

If the use of airspace is contemplated, the Region LA Coordinator should be contacted for more detailed policies and procedures that must be considered.

25.13 Document Retention

The acquiring agency shall maintain all records of its right-of-way actions for at least three years after payment of the final voucher to demonstrate compliance with 49 CFR Part 24. In addition, a diary must be maintained wherein each individual involved in a relocation, negotiations, or property management function shall enter and initial a suitable description of each contact and other information concerning that function. Each entry shall clearly show the month, day, and year of the contact; the name of the individual who made such contact; and the name(s) of the individual(s) contacted. Upon request, the Region LA Coordinator will provide explanations and/or counseling as to what are considered adequate records.

25.14 Appendixes

25.141 Governmental Agreement for Aid

25.142 Right-of-Way Procedures

25.143 Right-of-Way Project Funding Estimate Sample

25.144 True Cost Estimate Sample

25.145 Appraisal Report Forms (Sample)

25.146 Appraisal Waiver Procedure (Sample)

25.147 Review Appraiser Form (Sample)

25.148 Donation Statements (Sample)

25.149 Certification #1 (Sample) — All Right-of-Way Acquired

25.150 Certification #2 (Sample) — Right to Occupy All Right-of-Way Acquired

25.151 Certification #3 (Sample) — All Right-of-Way Not Acquired

25.152 Coordinators Worksheets (Sample)

25.153 Federal Aid Requirement Checklist

25.154 Process Flow Chart

23:P:LAG2D

Washington State
Department of Transportation

GOVERNMENTAL AGREEMENT FOR AID WORK BY STATE — ACTUAL COST		ORGANIZATION AND ADDRESS	FEDERAL EMPLOYERS ID NUMBER
AGREEMENT NUMBER	DISTRICT NUMBER	**LAND ACQUISITION, RELOCATION, AND RELATED SERVICES**	

This AGREEMENT, made and entered into this _____ day of _____, 19_____, between the STATE OF WASHINGTON, Department of Transportation, acting by and through the Secretary of Transportation, hereinafter called the "DEPARTMENT," and the above-named organization, hereinafter called the "AGENCY."

WHEREAS, the Uniform Relocation Assistance and Real Property Acquisition Policies Act of 1970 (PL 91-646, 84 Stat. 1894) amended by Uniform Relocation Act Amendments of 1987 (PL 100-17, 101 Stat. 246-256) as implemented by the United States Department of Transportation (49 CFR 24), Chapter 8.26 Revised Code of Washington (RCW), and Chapter 468-100 Washington Administrative Code (WAC) promulgated by Washington State Office of Community Development (OCD), all of which are hereinafter referred to as the **REGULATIONS,** establish a uniform policy for the expedient and consistent treatment of owners subjected to land acquisition practices and provide for the fair and equitable treatment of persons displaced in connection with or as a result of public works programs or projects of a State agency or local public body; and

WHEREAS, the AGENCY may propose to acquire or to administer the acquisition of real property in connection with public works programs or projects which may necessitate displacement of an individual, a family, business, farm, or nonprofit organization; and

WHEREAS, the DEPARTMENT has an established organization to complete project impact studies and to conduct land acquisition property management and relocation assistance programs in compliance with the **REGULATIONS** and is empowered to provide such services pursuant to Chapter 39.34 RCW; and

WHEREAS, the DEPARTMENT, in accordance with its policies does not desire to perform services for a public agency by entering into or otherwise interfering with competitive bidding by private enterprise in response to advertisement or solicitation by such public agency; and

WHEREAS, the AGENCY, in support of said departmental policies, assures the DEPARTMENT that the AGENCY's assignments and/or requests for services under this AGREEMENT will not result from bidding, negotiation, or other competition involving private enterprise; and

WHEREAS, the AGENCY may desire to obtain such services from the DEPARTMENT and the DEPARTMENT is willing to furnish such services to the AGENCY, and both deem it in the interest of the public to enter into this AGREEMENT;

NOW, THEREFORE, in consideration of the stated premise and in the interest of providing expedient, fair, equitable, and uniform treatment of land owners and persons to be displaced by proposed land acquisition projects and pursuant to RCW 8.26.120, the parties hereto agree as follows:

IN WITNESS WHEREOF, the parties hereto have executed this AGREEMENT as of the date first above written.

I
GENERAL

A. The DEPARTMENT shall, to its maximum ability, provide the AGENCY with impact study, appraisal review, acquisition, relocation assistance, or property management services described hereinafter, all in accordance with the appropriate elements of the department's operating requirements set forth in the departmental publication M26-01 (HW), *Right of Way Manual*, except where specific operating requirements are otherwise described herein. All such requirements shall conform to the **REGULATIONS.**

B. The normal workload of the department shall have priority over any work performed under the AGREEMENT. The work performed under this AGREEMENT shall be pursued with care and diligence, making every effort to recognize pertinent schedules of the AGENCY. The DEPARTMENT shall promptly notify the AGENCY of any hardship or other inability to perform under this AGREEMENT including postponement of the agency's work due to priority given to the department's work.

C. This AGREEMENT may be increased or decreased in scope or character of work to be performed if such change becomes necessary, but any such change shall be accomplished by written agreement and executed by all parties to said AGREEMENT.

D. The AGENCY shall indemnify and hold the DEPARTMENT and its agents, employees, and/or officers harmless from and shall process and defend at its own expense any and all claims, demands, suits at law or equity, actions, penalties, losses, damages, or costs, of whatsoever kind or nature, brought against the DEPARTMENT arising out of, in connection with, or incident to the execution of this AGREEMENT and/or the AGENCY performance or failure to perform any aspect of this AGREEMENT to the extent allowed by law.

II
WORK ASSIGNMENT/REQUEST

A. Specific assignments shall be made in writing to the DEPARTMENT by the AGENCY. The AGENCY shall make such assignments before any negotiations for property acquisition and before any discussion of price with the property owner, when required by the **REGULATIONS.**

B. The AGENCY shall furnish the DEPARTMENT with all information which has been compiled by or is available to the AGENCY concerning the property to be affected by each particular project. Such information shall include, but not be limited to, a list identifying each property affected by the project by parcel number, a tabulation of improvements on each property, the geographical location and boundaries of each property, and a description of how the project affects each property. The AGENCY shall furnish the DEPARTMENT copies of plan sheets showing limits of parcels, rights to be acquired, and sufficient engineering data to develop legal descriptions.

C. The DEPARTMENT shall furnish all labor, materials, supplies, and incidentals necessary to complete the work assigned by the AGENCY and shall furnish all information necessary to the conduct of a land acquisition program.

D. The DEPARTMENT will at its discretion and upon written request from the AGENCY furnish the following as required:

Impact Studies: Impact studies shall be made and reported in written narrative addressing potential influences by a program or project on land economics or land use factors, displacement/relocation factors, acquisition costs, and relocation plans, as requested.

Appraisal: Property shall be evaluated and value conclusions reported to conform with departmental operating requirements. Any request by the AGENCY for court preparation and testimony will be a separate work assignment request under this AGREEMENT and shall be submitted to the DEPARTMENT in a timely manner to provide not less than ninety (90) days notice in advance of any expected court appearance.

Appraisal Review: Appraisal reports shall be reviewed to conform with departmental operating requirements for validity of value conclusions provided such reports are accompanied by a copy of the appraiser's contract and provided that the AGENCY (or its agent) has determined that such reports appear to comply with the agency's procedural requirements and include adequate description of the property appraised and the interest to be acquired and appear to include adequate data supporting said conclusions. The AGENCY shall be responsible for obtaining any necessary replacements for unacceptable appraisal reports or for obtaining any substantive

revisions of inadequate reports where such reports were furnished to the DEPARTMENT by the AGENCY.

Acquisition: Every reasonable effort will be made to acquire real property by negotiations in accordance with the **REGULATIONS.** The DEPARTMENT shall attempt to acquire all property within the project limits without commencing condemnation proceedings. A written offer will be presented to each owner at the time price is first discussed for the property. The offer will be documented and retained as part of the parcel file. Individual parcel diaries will be maintained containing adequate written records of the negotiations including, but not limited to, the following:

1. Date and place of contacts;
2. Persons present;
3. Offers made (actual dollar amount);
4. Counter offers made;
5. Reasons settlement could not be reached.

Each request by the AGENCY shall specify the name of the grantee in whose name the property is to be conveyed. The DEPARTMENT shall provide the AGENCY with deeds to all property acquired and, wherever possible, instruments to clear encumbrances of title from those deeds. The DEPARTMENT will provide information leading to clearing of encumbrances which the DEPARTMENT cannot clear without legal action. Upon completion of a review of each acquisition by the DEPARTMENT's Title Section, all instruments and materials pertaining thereto will be provided to the AGENCY. Clearing remaining encumbrances of title and making the actual payment for the property shall be the responsibility of the AGENCY. Should it become apparent that negotiations for attempted acquisition have reached an impasse and sufficient time has elapsed for a property owner to make a decision, the DEPARTMENT will, either at its discretion or upon written request by the AGENCY, submit to the AGENCY a condemnation report that will contain a summary of negotiations, amounts of counter offers, if any, and other historic data relative to such attempted acquisition. The actual filing of condemnation and subsequent litigation shall be the responsibility of the AGENCY.

Relocation Assistance: Relocation assistance services shall be provided to conform with departmental operating requirements. All relocation claims presented by displacees will be processed by the DEPARTMENT, but the actual disbursement of monies shall be made by the AGENCY. As may be assigned by the AGENCY, the DEPARTMENT will respond to and assist the AGENCY with an appeal as to relocation assistance benefits filed by an aggrieved displacee; however, the AGENCY shall remain responsible for any appointment of a hearings officer, conducting hearings, maintaining records thereof, and rendering of the final decision of the AGENCY.

Property Management: Effective management of agency controlled properties will be provided in the name of the AGENCY in conformity with departmental operating requirements.

E. At the completion of the project the DEPARTMENT will, either at its discretion or upon written request by the AGENCY, turn over to the AGENCY all records including appraisal and appraisal review reports, acquisition, relocation assistance, and property management records pertinent to the work performed by the DEPARTMENT.

III
PAYMENT

The DEPARTMENT shall be paid by the AGENCY for completed work and for services rendered under the AGREEMENT as provided hereinafter. Such payment shall be full compensation for work performed or services rendered and for all labor, materials, supplies, and incidentals necessary to complete the work. The DEPARTMENT acknowledges and agrees that only those costs actually allocable to a project shall be charged to such project.

A. The DEPARTMENT shall be reimbursed in full by the AGENCY for its direct and related indirect costs accumulated in accordance with its current accounting procedures.

B. Partial payments will be made by the AGENCY upon receipt of the AGENCY of billings from the DEPARTMENT. Billings will not be more frequent than one per month. It is agreed that payment of any particular claim will not constitute agreement as to the appropriateness of any item and that at the time of final billing all required adjustments will be made.

C. Upon termination of this AGREEMENT as provided in Section VI, the DEPARTMENT shall be paid by the AGENCY for services rendered to the effective date of termination less all payments previously made. No payment shall be made by the AGENCY for any expense incurred or work done following the effective date of termination unless authorized, in writing, by the AGENCY.

D. Final payment of any balance due the DEPARTMENT of the ultimate gross reimbursable amount, prior to the effective date of termination, will be made upon ascertainment of such balance by the DEPARTMENT and certification thereof to the AGENCY.

IV
NONDISCRIMINATION

The DEPARTMENT shall comply with RCW Chapter 49.60. With respect to the work to be performed by the DEPARTMENT during the contract, the DEPARTMENT shall not discriminate on the grounds of race, color, sex, national origin, marital status, age, or the presence of any sensory, mental, or physical handicap in the selection and retention of agents, subcontractors, including procurement of services or materials, or leases or equipment. The DEPARTMENT shall comply with Title VI of the Civil Rights Act of 1974, USC 2000d-d4 and related statutes.

V
VENUE

In the event that any party deems it necessary to institute legal action or proceedings to enforce any right or obligation under this AGREEMENT, the parties hereto agree that any such action or proceeding shall be brought in a court of competent jurisdiction situated in Thurston County, Washington.

VI
COMMENCEMENT AND TERMINATION OF AGREEMENT

The work is of a continuing nature and will be in force as of the date of this AGREEMENT. Either party may terminate this AGREEMENT at any time upon not less than sixty (60) days written notice to the other party with or without cause. The AGREEMENT shall terminate three years from the date of execution hereof unless otherwise terminated or unless extended in writing signed by both parties.

IN WITNESS WHEREOF, the parties hereto have executed this AGREEMENT as of the date first above written.

AGENCY

By: _____

_____

_____

STATE OF WASHINGTON
DEPARTMENT OF TRANSPORTATION

By: _____

DOT Form 224-075
Revised 9/93

AGENCY_____ AGENCY NO. _____

The _____ ("*AGENCY*"), desiring to acquire Real Property in accordance with the state Uniform Relocation Assistance and Real Property Acquisition Act (Ch. 8.26 RCW) and state regulations (Ch. 468-100 WAC) and applicable federal regulations hereby adopts the following procedures to implement the above statutes and Washington Administrative Code. The _____ ("*Department*") of the AGENCY is responsible for the real property acquisition and relocation activities on projects administered by the AGENCY. To fulfill the above requirements the _____ ("*Department*") will acquire right-of-way in accordance with the policies set forth in the Washington State Department of Transportation *Right of Way Manual* (M 26-01) and *Local Agency Guidelines* manual (M 36-6). The AGENCY has the following expertise and personnel capabilities to accomplish these functions:

1. Include the following as they relate to the AGENCY's request.

   a. List the functions below for which the agency has qualified staff and the responsible position. Attach a list of the individuals on the AGENCY staff who currently fill those positions and a brief summary of their qualifications. This list will need to be updated whenever staffing changes occur. An AGENCY will be approved to acquire based upon staff qualifications.

      (1) PROGRAM ADMINISTRATION

      _____
      Agency Position

      (2) APPRAISAL

      _____
      Agency Position

      (3) APPRAISAL REVIEW

      _____
      Agency Position

      (4) ACQUISITION

      _____
      Agency Position

      (5) RELOCATION

      _____
      Agency Position

      (6) PROPERTY MANAGEMENT

      _____
      Agency Position

   b. Any functions for which the Agency does not have staff will be contracted for with WSDOT, another local agency with approved procedures or an outside contractor. An AGENCY that proposes to use outside contractors for any of the above functions will need to work closely with the WSDOT Local Agency Coordinator and TransAid to ensure all requirements are met. In particular any contract for acquisition services must be pre-approved by WSDOT prior to the start of negotiations by the AGENCY. When the AGENCY proposes to have a staff person negotiate who is not experienced in negotiation for FHWA funded projects the Coordinator must be given a reasonable opportunity to review all offers and supporting data **before** they are presented to the property owners.

c. An AGENCY wishing to take advantage of an Appraisal Waiver process on properties valued at $5,000 or less should make their proposed waiver process a part of these procedures. The process outlined in LAG manual Appendix 25.75 has already been approved. The AGENCY may submit a process different than that shown and it will be reviewed and approved if it provides sufficient information to determine value.

d. Attach a copy of the Agency's administrative settlement policy showing the approving authority(s) and the process involved in making administrative settlements.

2. All projects shall be available for review by the FHWA and the state at any time and all project documents shall be retained and available for inspection during the plan development, right-of-way and construction stages and for a three year period following acceptance of the projects by WSDOT.

3. Approval of the AGENCY's procedures by WSDOT may be rescinded at any time the Agency is found to no longer have qualified staff or is found to be in non-compliance with the regulations. The rescission may be applied to all or part of the functions approved.

_____ _____
Mayor or Chairman **Date**

WASHINGTON STATE DEPARTMENT
OF TRANSPORTATION

Approved By: _____ _____
Real Estate Services **Date**

25:P:LAG2F

PFE PARCEL WORKSHEET

PROJECT: _____

OWNERS NAME: _____

PROPERTY LOCATION: _____

BEFORE AREA: _____ AFTER AREA: _____

ACQUISITION AREA

FEE: _____ (area) _____ (type) EASEMENT: _____ (area)

CURRENT USE: _____ ZONING: _____

HIGHEST & BEST USE: _____

EFFECTS OF ACQUISITION: _____
_____
_____
_____
_____

SALES RELIED ON : _____ (contained in Data Package for this project dated _____.

Subject Sold within last 5 Years? _____. If yes, is Sale included in Data package? _____

ACQUISITION COMPENSATION

FEE
LAND:

_____ (area) (unit value) $_____

_____ (area) (unit value) $_____

IMPROVEMENTS:

_____ (type and size) (unit value) $_____

_____ (type and size) (unit value) $_____

EASEMENT: _____ (unit value) $_____

DAMAGES:

_____ $_____

_____ $_____

TOTAL: $_____

Sheet ___ of ___ Sheets Parcel _____

Plan Approval Date _____ Revision Date _____ Worksheet Date _____

RIGHT OF WAY PROJECT FUNDING ESTIMATE

Project: _____ **FA #** _____

Date: _____

1	2	3	4	5	6	7	8	9	10	11
Parcel Number	Just Compen (Offer)	Appraisal Fee Costs	Appraisal Review Fee Costs	Negotiation Fee Costs	Title, Escrow Costs	Prop. Mgmt. Service Costs	Relocation Service Costs	Relocation Payments	Condemn. and Incid. Costs	Total Parcel Costs

S A M P L E
NEIGHBORHOOD DESCRIPTION
FOR PROJECT: YAKIMA COUNTY: SUNSET HILL ROAD WIDENING No. 311

Date: October 21, 1986

The project vicinity is rural Yakima County lying about 40 km (25 miles) westerly of Yakima city limits in an area commonly called Sunset Hill. The county road connecting the area to the city of Yakima is the Sunset Hill Road, which is currently a two-lane arterial. The area is primarily devoted to agricultural uses, such as cattle raising and forest products, but also is developing with single family lot subdivisions and ranchette residential uses. This part of the county is becoming a bedroom area for commuters to Yakima and several commercial uses have developed along the Sunset Hill Road. Zoning here is Agricultural (AG) minimum 8 ha (20 acres), with areas bordering the Sunset Hill Road zoned Single Family Residential (SR-13), minimum 1 210 square meters (13,000 square feet) per site, and a strip along said arterial between Henderson Road and White Bluff Boulevard being zoned for commercial and/or office uses (CPD), with a minmum area required of 1 395 square meters (15,000 square feet) per site. Utilities available along Sunset Hill Road are Puget Power, West Yakima Water (Community System), PNB telephone, and sewers are by individual septic systems (soils percolate adequately). There appears to be minimal demand for new commercial development along Sunset Hill Road.

Traffic along the Sunset Hill Road is heavy during the rush hour. Hence, the proposed project is to widen this arterial to four traffic lanes with a dual-left turn lane in the center. A traffic light is planned at the intersection of Henderson Road. The project will be at present grade and will include curbing. Access ponts will be controlled at existing locations. The right of way needed is a 6-meter (20-foot) strip of fee land from each side of Sunset Hill Road between Henderson Road and White Bluff Boulevard.

Eleven parcels will be affected: seven homes, a tree farm (810 ha (2,000 acres) in size), one convenience store, a small wholesale lumber mill, and a new professional (medical) office complex. One of the residences is partially in the take and possibly will require relocating the owner-occupant family. A machine shed on the lumber mill site is partially in the take and it contains tenant-owned equipment. The convenience store's gasoline dispensers and canopy are partially in the take. About 10 of the 40 parking stalls for the medical office are in the taking, possibly resulting in loss of one tenant. The project should generally benefit the neighborhood by improving traffic flow during the rush hour. The neighborhood should continue to moderately change from agricultural to single family uses, with no major zoning changes immediately foreseeable, since neighborhood commercial services should remain adequate for the next five or more years.

TRUE COST PARCEL WORKSHEET

Project:_____ Parcel # _____

Notes:

Assessor's Tax Parcel Number(s):

Zone Size Min. = _____: Assessed Value Land = _____:

A.V. Bldg.#1 = _____: Bldg.#2 = _____: Bldg.#3 = _____:

Bldg.#4 = _____: Total Property Assessed Value = _____

R/W Map Info:

Before Area = _____: After Area = _____: Fee Take = _____:

Permanent Esmt Take = _____: Temporary Esmt Take = _____

Property Costs:

Total Take = (total property A.V. x 1.20) = $_____

Or **Or**

Partial Take:

Fee Land = _____ @ $ _____ (A.V. land per unit) x 1.20 = $_____

Yard/Site Improvements in Take @ Administrative Lump Sum = $_____

Major Building in Take @ (A.V. of Bldg. #_____) x 1.20 = $_____

Perm. Esmt. = _____ @ $_____ (A.V. land per unit) = $_____

Temp. Esmt. = _____ @ $ _____ (A.V. land per unit) x 10% = $_____

TOTAL PROPERTY COSTS (put in column 2 of True Cost) = $_____

Administrative Costs (put in respective columns of True Cost):

3. Appraisal Fee = _____
4. Appraisal Review Fee = _____
5. Negotiation Fee = _____
6. Title and Escrow Fee = _____
7. Prop. Mgmt. Services = _____
8. Relocation Services = _____
9. Relocation Payments = _____
10. Condemn & Incidentals = _____

TRUE COST ESTIMATE

Project: _____ **FA #** _____

Date: _____

1	2	3	4	5	6	7	8	9	10	11
Parcel Number	Just Compen (Offer)	Appraisal Fee Costs	Appraisal Review Fee Costs	Negotiation Fee Costs	Title, Escrow Costs	Prop. Mgmt. Service Costs	Relocation Service Costs	Relocation Payments	Condemn. and Incid. Costs	Total Parcel Costs
									Total R/W Costs	

S A M P L E
NEIGHBORHOOD DESCRIPTION
FOR PROJECT: YAKIMA COUNTY: SUNSET HILL ROAD WIDENING No. 311

Date: October 21, 1986

The project vicinity is rural Yakima County lying about 40 km (25 miles) westerly of Yakima city limits in an area commonly called Sunset Hill. The county road connecting the area to the city of Yakima is the Sunset Hill Road, which is currently a two-lane arterial. The area is primarily devoted to agricultural uses, such as cattle raising and forest products, but also is developing with single family lot subdivisions and ranchette residential uses. This part of the county is becoming a bedroom area for commuters to Yakima and several commercial uses have developed along the Sunset Hill Road. Zoning here is Agricultural (AG) minimum 8 ha (20 acres), with areas bordering the Sunset Hill Road zoned Single Family Residential (SR-13), minimum 1 210 square meters (13,000 square feet) per site, and a strip along said arterial between Henderson Road and White Bluff Boulevard being zoned for commercial and/or office uses (CPD), with a minmum area required of 1 395 square meters (15,000 square feet) per site. Utilities available along Sunset Hill Road are Puget Power, West Yakima Water (Community System), PNB telephone, and sewers are by individual septic systems (soils percolate adequately). There appears to be minimal demand for new commercial development along Sunset Hill Road.

Traffic along the Sunset Hill Road is heavy during the rush hour. Hence, the proposed project is to widen this arterial to four traffic lanes with a dual-left turn lane in the center. A traffic light is planned at the intersection of Henderson Road. The project will be at present grade and will include curbing. Access ponts will be controlled at existing locations. The right of way needed is a 6-meter (20-foot) strip of fee land from each side of Sunset Hill Road between Henderson Road and White Bluff Boulevard.

Eleven parcels will be affected: seven homes, a tree farm (810 ha (2,000 acres) in size), one convenience store, a small wholesale lumber mill, and a new professional (medical) office complex. One of the residences is partially in the take and possibly will require relocating the owner-occupant family. A machine shed on the lumber mill site is partially in the take and it contains tenant-owned equipment. The convenience store's gasoline dispensers and canopy are partially in the take. About 10 of the 40 parking stalls for the medical office are in the taking, possibly resulting in loss of one tenant. The project should generally benefit the neighborhood by improving traffic flow during the rush hour. The neighborhood should continue to moderately change from agricultural to single family uses, with no major zoning changes immediately foreseeable, since neighborhood commercial services should remain adequate for the next five or more years.

ACQUISITION APPRAISAL REPORT

1. OWNER:

2. LOCATION OF SUBJECT:

3. SUBJECT LEGAL DESCRIPTION:

4. DELINEATION OF TITLE (5 years):

5. DESCRIPTION OF SUBJECT PROPERTY including Neighborhood, Larger Parcel, Zoning, Present Use, Improvements, Highest and Best Use-Vacant and Improved:

6. PROPERTY RIGHTS TO BE ACQUIRED AND EFFECTS OF ACQUISITION / PROJECT

7. VALUATION-BEFORE
   - A. Land as Though Vacant
     - (1) Scope of Data Search
     - (2) Comparative Analyses
     - (3) Correlation and Conclusion-Land Value Before
   - B. Whole Property
     - (1) Scope of Data Search
     - (2) Comparative Analyses
     - (3) Correlation and Conclusion-Property Value Before

8. DESCRIPTION OF SUBJECT REMAINDER:

9. VALUATION-AFTER:
   - A. Land as Though Vacant
     - (1) Scope of Data Search
     - (2) Comparative Analyses
     - (3) Correlation and Conclusion-Land Value After
   - B. Whole Property
     - (1) Scope of Data Search
     - (2) Comparative Analyses
     - (3) Correlation and Conclusion-Property Value After

10. EXPLANATION, MEASUREMENT, AND ALLOCATION OF DAMAGES / SPECIAL BENEFITS:

11. REPORT OF CONTACT WITH OWNER:

Person(s) Contacted	Date of Contact:
Address:	Relationship to Owner:
	Date of Joint Inspection:
Phone:	
Comments:	

Appraiser: Page Parcel:

Washington State Department of Transportation

Parcel No.:
Federal Aid No.:
Project:
Map Sheet of **Sheets**
Map Approval Date:
Date of Last Map Revision:

CERTIFICATE OF APPRAISER

I certify that, to the best of my knowledge and belief:

- the statements of fact contained in this appraisal are true and correct;
- the reported analyses, opinions, and conclusions are limited only by the reported assumptions and limiting conclusions, and are my personal, unbiased professional analyses, opinions, and conclusions;
- I have no present or prospective interest in the property that is the subject of this appraisal, and I have no personal interest or bias with respect to the parties involved;
- my compensation is not contingent upon the reporting of a predetermined value or direction that favors the cause of the client, the amount of the value estimate, the attainment of a stipulated result, or the occurrence of a subsequent event;
- my analyses, opinions, and conclusions were developed, and this appraisal has been prepared, in conformity with the appropriate State and Federal laws, regulations, policies and procedures applicable to the appraisal of right of way for such purposes;
- I have made a personal inspection of the property that is the subject of this report. I have made a personal inspection of the comparable sales contained in the report addenda;
- I have afforded the owner or a designated representative of the property that is the subject of this appraisal the opportunity to accompany me on the inspection of the property.
- no one provided significant professional assistance to the person signing this report. (If there are exceptions, the name of each individual providing significant professional assistance must be stated);
- I have disregarded any increase in Fair Market Value caused by the proposed public improvement or its likelihood prior to the date of valuation. I have disregarded any decrease in Fair Market Value caused by the proposed public improvement or its likelihood prior to the date of valuation, except physical deterioration within the reasonable control of the owner;

The property has been appraised for its fair market value as though owned in fee simple, or as encumbered only by the existing easements as described in the title report dated _____.

The opinion of value expressed below is the result of, and is subject to the data and conditions described in detail in this report of _____ pages.

I made a personal inspection of the property that is the subject of this report on

The **Date of Value** for the property that is the subject of this appraisal is _____. Per the FAIR MARKET VALUE definition contained in the Acquisition Appraisal Salient Information, the value conclusions for the property that is the subject of this appraisal are on a cash basis and are:

FAIR MARKET VALUE BEFORE ACQUISITION $ _____

FAIR MARKET VALUE AFTER ACQUISITION $ _____

DIFFERENCE $ _____

Date of Assignment or Contract: _____ Name: _____

Date Signed: _____ Signature: _____

Washington State-certified general real estate appraiser certification number:

CERTIF1
DO NOT WRITE BELOW THIS LINE _____

Headquarters Service Center Date Stamp Region Date Stamp

CERTIF1 Page 1

WAIVER OF APPRAISAL

The (Agency) desiring to acquire Real Property according to 23 CFR, Part 635, Subpart C and State directives and desiring to take advantage of the $5,000.00 appraisal waver process approved by the Federal Highway Administration for Washington State, hereby agrees to follow the procedure approved for the Washington State Department of Transportation as follows:

Rules

A. The (***Agency***) may elect to waive the requirement for an appraisal if the acquisition is simple and the compensation estimate indicated on the PFE (Project Funding Estimate) is $5,000.00 or less excluding cost-to cure items. Documented and reasonable cost-to-cure items not to exceed $10,000 may be included in addition to the acquisition amount. Cost-to-cure items shall be limited to fencing, utility rehabilitation, driveway rehabilitation, and on-premise advertising sign relocation.

B. The Agency must make the property owner(s) aware that an appraisal has not been done on the property and that one will be completed if they desire.

C. Special care should be taken in the preparation of the waiver. As no review is mandated, the preparer needs to assure that the compensation is fair and that all the calculations are correct.

Procedures

A. An Administrative Offer Summary (AOS) is prepared using data from the PFE.

B. The AOS is submitted to (***position Title Only***) for approval.

C. (***position Title Only*** **)** signs the AOS authorizing a first offer to the property owner(s).

APPROVED:

(Agency)

By:

Director, Real Estate Services
Washington State Department
of Transportation

Project Funding Estimate

Rules

A A Project Funding Estimate (PFE) is prepared for every project were Right of Way will be acquired.

B. As a minimum, the PFE contains the following information.

1. A parcel-by-parcel list of right of way costs reported on the Right of Way Estimate (WSDOT form 261-006).

2. A total project right of way cost summary reported on the Right of Way Project Cost Breakdown and Summary (WSDOT Form 261-006A).

3. A project data package including sales, sales map, neighborhood and project description, scope of sales search and, if applicable, damage studies, cost to cure documentation, and Assumptions and Limiting Conditions. Note: The PFE Parcel Worksheet is <u>not</u> a part of the data package.

Procedures

The Agent assigned to do the PFE completes the estimate as follows:

A. Inspect the project and becomes familiar with the engineering features of the plan.

B. View individual parcels to determine the effects of acquisition.

C. Prepares a Neighborhood and Project Description which defines existing uses, zoning, trends, transportation and utilities, economic influences, a synopsis of the project and its effect on parcels, and any changes in the aforementioned likely to be caused by the project.

D. Gathers sufficient comparable land sales and listings for the various types of parcels and remainders within the project. All sales shall be inspected, photos taken and written up on Market Data (WSDOT Form 261-020) sheets. (If the sales are to be used exclusively on parcels where the Agency has determined to waive the appraisal, the sales need not be confirmed. In all other cases, a reasonable effort shall be made to confirm all sales. Unconfirmed sales will contain an explanation of the confirmation effort along with names and phone numbers of uncontracted parties.)

E. Prepares project and sales vicinity map.

F. Prepares PFE Parcel Worksheet for each parcel on the project.

G. Includes any applicable damage studies.

H. Includes cost-to-cure documentation for estimates and/or bids.

I. Includes applicable Assumptions and Limiting Conditions if data Package will be referred to in the preparation of Abbreviated Appraisals.

ADMINISTRATIVE OFFER SUMMARY

PROJECT: _____

OWNERS NAME: _____

PROPERTY LOCATION: _____

BEFORE AREA: _____ AFTER AREA: _____

ACQUISITION AREA

FEE: _____ (area) _____ (type) EASEMENT: _____ (area)

CURRENT USE: _____ ZONING: _____

HIGHEST & BEST USE: _____

EFFECTS OF ACQUISITION: _____
_____
_____
_____
_____

SALES RELIED ON : _____ (contained in Data Package for this project dated _____.)

ACQUISITION COMPENSATION

FEE
LAND:

_____ (area) (unit value) $_____

IMPROVEMENTS:

_____ (type and size) (unit value) $_____

_____ $_____

EASEMENT: _____ (unit value) $_____

DAMAGES:

_____ $_____

TOTAL: $_____

Sheet ___ of ___ Sheets Parcel _____

Plan Approval Date _____ Revision Date _____ Worksheet Date _____

Prepared By: _____ Date: _____

I concur in the value estimate herein and authorize an Administrative Offer be made in said amount.

_____ (Region RES Manager) _____ (Date)

This form is prepared in conformance with WSDOT policy and procedures. It does not constitute an appraisal as defined by the USPAP.

Federal Aid # _____. Parcel # _____

Washington State
Department of Transportation

REVIEW APPRAISER'S CERTIFICATE NO. 1

FROM: _____, Review Appraiser

TO:

Agency:
Parcel No.:
Owner:
Federal Aid No.
Project:

Map Sheet:
Map Approval Date:
Date of last map revision:

The following appraisals have been made on subject property:

APPRAISER	VALUATION DATE	BEFORE VALUE $	AFTER VALUE $	VALUE DIFFERENCE $	ALLOCATION $	
					TAKING $	DAMAGES $
1.						

The following prior certificate(s) of value have been made on subject property:

REVIEW APPRAISER	DATE OF PRIOR DV	BEFORE VALUE $	AFTER VALUE $	JUST COMPENSATION $	ALLOCATION $	
					TAKING $	DAMAGES $
1.						

Comments:

The appraiser completed a narrative appraisal report as contracted. The data used is adequate and relevant and any adjustments made to the data are proper. The appraisal methods and techniques used are appropriate. The analyses, opinions and value conclusions in the report under review are appropriate and reasonable.

I, the review appraiser, have both the experience and the knowledge to perform this appraisal review competently. Attached are my Appraisal Review Assumptions and Limiting Conditions and my Appraisal Review Salient Information which are made a part of this appraisal review report.

I inspected the subject property and the sales data used in the appraisal report on _____.

My value conclusions and appraisal review findings are as follows:

REVIEWER'S DETERMINATION OF VALUE (This Review):
VALUE BEFORE ACQUISITION: $
VALUE AFTER ACQUISITION: $
VALUE DIFFERENCE: $

Reviewer's Allocation of Just Compensation:
Acquisition: $
Damages: $

JUST COMPENSATION IS $ AS OF

CERTIFICATE OF REVIEW APPRAISER

I, the review appraiser, certify that, to the best of my knowledge and belief:

1. The facts and data reported by the review appraiser and used in the review process are true and correct.
2. The analyses, opinions, and conclusions in this review report are limited only by the assumptions and limiting conditions stated in this review report, and are my personal, unbiased professional analyses, opinions, and conclusions.
3. I have no present or prospective interest in the property that is the subject of this report and I have no personal interest or bias with respect to the parties involved.
4. My compensation is not contingent on an action or event resulting from the analyses, opinions, or conclusions in, or the use of, this review report.
5. My analyses, opinions, and conclusions were developed and this review report was prepared in conformity with the appropriate State laws, regulations, procedures and policies applicable to appraisal of right-of-way for such purposes.
6. I did personally inspect the subject property of the report under review.
7. No one provided significant professional assistance to the person signing this review report.

I further certify that if this determination is to be used in conjunction with a Federal aid highway project or other Federally funded project, none of the approved just compensation is ineligible for Federal reimbursement.

Washington State-certified general real estate appraiser certificate number:

Signature: _____

_____ **, Review Appraiser,**

Date:

ACQUIRING AGENCY CONCURRENCE AND AUTHORIZATION:

The _____of_____does hereby indicate the concurrence with the above certification and does authorize further action by _____to proceed according to established procedures with the acquisition of the designated property.

_____(Date) _____ _____.

Proposed Donation Letter

Date

_____
_____
_____

Subject: Project Title
Parcel Number

Sirs:

(My/Our) donation of (parcel number or property description) to the (name of local agency) for highway/ transportation purposes is made voluntary and with full knowledge of (my/our) entitlement to receive just compensation therefore. (I/We) hereby release the (name of local agency) from obtaining an appraisal of the acquired property.

Sincerely,

_____

Proposed Donation Letters (Through Local Agency)

Date

Regional Administrator/
Chief Right-of-Way Agent
Washington State Department of Transportation
Transportation Building
Olympia, WA 98504

Subject: (Project Title)
(Federal Aid Number)
Parcel Number _____

Sirs:

The attached instrument for donation of right-of-way to the agency is in compliance with the provisions of *_____.

Sincerely,

_____
Accept and Approval

_____
STATE OF WASHINGTON
DEPARTMENT OF TRANSPORTATION

Concur and Approve

_____

Title _____

_____
(Local Agency)

*(Typical language.)
...City/County Commission Resolution No. 111.
...City/County Ordinance No. 111.
...City/County Conditional Use Permit No. 111.
...City/County Building Permit No. 111.

(For use when a local agency project is adjacent to WSDOT right-of-way and WSDOT does not have an active project at this location.)

All Right-of-Way Acquired

RIGHT-OF-WAY CERTIFICATE #1

TO: _____
Regional TransAid Engineer
_____
_____

Date: _____

RE: Federal Aid No.: _____
Project Title: _____
_____
Local Agency: _____

Dear Sir:

As per title 23 CFR, Part 635, Section 309, Para (c), right of way has been acquired in accordance with current FHWA Directives covering the acquisition of real property and the following applies:

I hereby certify that all necessary rights-of-way, including control of access rights (when pertinent), have been acquired including legal and physical possession.

AND

(a) There are no improvements to be removed or demolished for the above cited project.

OR

(b) All occupants have vacated the lands and improvements and the agency has physical possession and the right to remove, salvage, or demolish these improvements and enter upon all lands.

AND

(a) I further certify that there were no individuals or families displaced by the above cited project. Therefore, the provisions of current FHWA directives covering the relocation of displacees to DS&S housing and availability of adequate replacement housing are not applicable to this project.

OR

(b) I further certify that our previously submitted assurances of an adequate relocation assistance program and real property acquisition policies have been fully implemented. All eligible persons and occupants of the right-of-way within this project have been relocated to decent, safe and sanitary housing or have been offered decent, safe and sanitary housing.

Project Description:

Total parcels required for project: _____
Parcel(s) with Relocation: _____
Temporary Construction Permits: _____

Sincerely,

_____
Chief Administrative Officer of
Local Agency or Delegated Authority

_____
Manager, Real Estate Services
_____ Region

Right to Occupy All Right-of-Way Acquired (Some P&U's or Rights of Entry)

RIGHT-OF-WAY CERTIFICATE #2

TO: _____ Date: _____
Regional TransAid Engineer
_____
_____

RE: Federal Aid No.: _____
Project Title: _____
_____
Local Agency: _____

Dear Sir:

As per title 23 CFR, Part 635, Section 309, Para (c), right-of-way has been acquired in accordance with current FHWA Directives covering the acquisition of real property and the following applies:

I hereby certify that although all necessary rights of way have not been acquired, the right to occupy and use all rights of way required for the proper execution of the project have been acquired.

AND

(a) There are no improvements to be removed or demolished for the above cited project.

OR

(b) All occupants have vacated the lands and improvements and the agency has physical possession and the right to remove, salvage, or demolish these improvements and enter upon all lands.

AND

(a) I further certify that there were no individuals or families displaced by the above cited project. Therefore, the provisions of current FHWA directives covering the relocation of displacees to DS&S housing and availability of adequate replacement housing are not applicable to this project.

OR

(b) I further certify that our previously submitted assurances of an adequate relocation assistance program and real property acquisition policies have been fully implemented. All eligible persons and occupants of the right-of-way within this project have been relocated to decent, safe and sanitary housing or have been offered decent, safe and sanitary housing.

Sample #2 Certification (continued)

Project Description:

Total parcels required for project: _____
a. Parcel(s) acquired: _____
b. Parcel(s) with possession and use only: _____
List:

P&U Parcel #	Owner	Effective Date
1.		
2.		

c. Parcels covered by right(s) of entry: _____
List:

R/E Parcel #	Owner	Effective Date	Termination Date
1.			
2.			

d. Temporary construction permit(s) acquired: _____

e. Parcel(s) with Relocation: _____

Sincerely,

_____
Chief Administrative Officer of
Local Agency or Delegated Authority

_____
Manager, Real Estate Services
_____ Region

All Right-of-Way Not Acquired (Use Only in Very Unusual Circumstances)

RIGHT-OF-WAY CERTIFICATE #3

TO: _____
Regional TransAid Engineer
_____
_____

Date: _____

RE: Federal Aid No.: _____
Project Title: _____
_____
Local Agency: _____

Dear Sir:

As per title 23 CFR, Part 635, Section 309, Para (c), right-of-way has been acquired in accordance with current FHWA Directives covering the acquisition of real property and the following applies:

I hereby certify that the acquisition or right of occupancy and use of a few remaining parcels is not complete, but all occupants of the residences on such parcels have had replacement housing made available to them in accordance with 49 CFR 24.204.

AND

(a) There are no improvements to be removed or demolished for the above cited project.

OR

(b) All occupants have vacated the lands and improvements and the agency has physical possession and the right to remove, salvage, or demolish these improvements and enter upon all lands.

OR

(c) Occupants remain to be vacated and the agency ensures that occupants who remain in the right-of-way will be protected against unnecessary inconvenience and disproportionate injury or any action coercive in nature.

AND

(a) I further certify that there were no individuals or families displaced by the above cited project. Therefore, the provisions of current FHWA Directives covering the relocation of displacees to DS&S housing and availability of adequate replacement housing are not applicable to this project.

OR

(b) I further certify that our previously submitted assurances of an adequate relocation assistance program and real property acquisition policies have been fully implemented. All eligible persons and occupants of the right-of-way within this project have been relocated to decent, safe and sanitary housing or have been offered decent, safe and sanitary housing.

OR

(c) I further certify that our previously submitted assurances of an adequate relocation assistance program and real property acquisition policies have been fully implemented **except** for a few remaining parcels as explained in the exception section.

Sample #3 Certification (continued)

Project Description:

Total parcels required for project: _____
a. Parcel(s) acquired: _____
b. Parcel(s) with possession and use only: _____
List:

P&U Parcel #	Owner	Effective Date
1.		
2.		

c. Parcels covered by right(s) of entry: _____
List:

R/E Parcel #	Owner	Effective Date	Termination Date
1.			
2.			

d. Temporary construction permit(s) acquired: _____

e. Parcel(s) with Relocation: _____

Exceptions:

(List all exceptions by parcel number. A realistic date of occupancy of the parcel and of completion of relocation must be given with an explanation of why those dates are realistic. Explain also, why it is in the public interest that the project be advertised without acquisition being completed.)

I further certify that appropriate notification will be provided in the bid proposals identifying all locations where right of occupancy and use has not been obtained.

Sincerely,

_____ _____
Chief Administrative Officer of Manager, Real Estate Services
Local Agency or Delegated Authority _____ Region

PROJECT WORK SHEET

AGENCY: _____ **F.A. NUMBER:** _____

PROJECT TITLE: _____

PROCEDURES DATED:_____

NUMBER OF PARCELS: _____

RELOCATION PLAN DATED : POSITIVE: _____ NEGATIVE : _____

PROJECT FUNDING ESTIMATE DATED: _____

FHWA PARTICIPATION IN R/W:_____ ACQ. AUTHORIZATION DATED_____

RIGHT OF WAY PLAN:

F.A. NUMBER: _____ OWNERSHIP INFORMATION: _____

AREAS BEFORE: _____ AFTER: _____ R/W: _____

ADEQUATE DATA FOR LEGAL: _____

COMMENTS:

Page 1 of 3

PARCEL WORK SHEET

PROJECT TITLE:

PARCEL NUMBER: **ACREAGE:**

APPRAISAL - DATED _____
AMOUNT _____
FIRM _____

REVIEW - DATED _____
AMOUNT _____

JC SET BY AGENCY - DATED _____
AMOUNT _____

OFFER LETTER- DATED _____
AMOUNT _____

ADMN. SETTLEMENT AMOUNT _____ AGENCY APPROVED _

TOTAL SETTLEMENT AMOUNT _____

UNECONOMIC REMNANT ___ VALUE _____ OFFER MADE _

DONATION: STATEMENT SIGNED _____

TITLE REPORT _____ ENCUMBRANCES CLEARED _

DEED DATED _____ RECORDED _____

DOCUMENTS
1. LEGAL DESCRIPTION ____
2. PARTIES _____
3. NOTARY _____

PROOF OF PAYMENT _____ NEGOTIATOR DISCLAIMER _____

DIARY COMPLETE _____ SIGNED _____

RELOCATION

ADDITIONAL COMMENTS

REVIEWER: DATE:

Page 2 of 3

The following is a list of items needed in an Agency's files to allow the LPA coordinator to complete a project certification review. This list is not all inclusive and is meant as an aid to file preparation only.

PROJECT FILE

1. RIGHT OF WAY PLAN
2. PROJECT FUNDING ESTIMATE
3 RELOCATION PLAN
4. FHWA ACQUISITION AUTHORIZATION
5. CONDEMNATION AUTHORIZATION (IF NEEDED)

NEGOTIATION FILE

1. APPRAISAL(S)
2. APPRAISAL REVIEW(S)
3. JUST COMPENSATION (SET BY AGENCY)
4. DIARY(S)
5. OFFER LETTER(S)
6. ADMINISTRATIVE SETTLEMENT JUSTIFICATION AND APPROVAL
7. DONATION STATEMENT(IF APPLICABLE)
8. TITLE EVIDENCE
9. COPIES OF RECORDED DOCUMENTS
10. PROOF OF PAYMENT(S)
11. NEGOTIATOR DISCLAIMER STATEMENT
12. CONSULTANT CONTRACT(S)
13. CORRESPONDENCE

RELOCATION FILE

1. DIARY(S)
2. PROPER NOTICE(S):
   - GENERAL INFORMATION
   - RELOCATION ELIGIBILITY
   - 90 DAY NOTICE

RESIDENTIAL:

3. RELOCATION BENEFITS COMPUTATION
4. BENEFITS NOTICE
5. MOVING AGREEMENT
6. PROOF OF PURCHASE OR RENT
7. DS&S INSPECTION REPORT
8. EVIDENCE OF ADVISORY ASSISTANCE
9. ALL SUPPORTING DOCUMENTATION

BUSINESS:

10. BENEFITS NOTICE
11. MOVING AGREEMENT
12. CLAIM FORMS
13. EVIDENCE OF ADVISORY ASSISTANCE
14. ALL SUPPORTING DOCUMENTATION

15. PROOF OF PAYMENT(S)

Page 3 of 3

Informational Only

Agency _____ Region _____ Date _____

Project _____
(Federal Aid Number) (Name)

Federal Funds Will Be Used For: PE _____ R/W _____ CONST. _____

Persons Will Be Displaced: YES _____ NO _____

Right-of-Way Acquired For This Project: YES _____ NO _____

(Reminders)	(Comments)
1. Real property must be appraised before initiation of negotiations with the owner, per 49 CFR 24.102(c) and 24.108.	1.
2. Owners must be given an opportunity to accompany each appraiser during his inspection of the property, per 49 CFR 24.102(c).	2.
3. The acquiring agency must establish just compensation before initiation of negotiations with the owners, per 49 CFR 24.102(d).	3.
4. No increase or decrease in the FMV due to the project except physical deterioration, is to be considered in the valuation of the property, per 49 CFR 24.103(d).	4.
5. Appraisals are not to give consideration nor include any allowance for relocation assistance benefits.	5.
6. The owner is not to be left with an uneconomic remnant that the acquiring agency did not offer to acquire, per 49 CFR 24.102(k).	6.
7. The owner is to be given a written statement of the amount offered as just compensation, and where appropriate, the compensation for real property to be acquired and the compensation for damages, if any, to the remaining real property shall be separately stated in the written statement, per 49 CFR 24.102(e).	7.
8. No owner shall be required to surrender possession before the agreed purchase price has been paid or the approved amount of compensation has been paid into the court, per 49 CFR 24.102(j).	8.
9. No lawful occupant shall be required to move unless the occupant has been given at least 90 days advance written notice of the earliest date by which the occupant may be required to move, per 49 CFR 24.203(c).	9.

(Reminders)	(Comments)
10. The rental amount charged to owners and/or tenants permitted to occupy the property subsequent to acquisition must not exceed the fair rental value for such occupancy, per 49 CFR 24.102(m).	10.
11. No action must be taken to advance condemnation, defer negotiations or condemnation or taken any other action coercive in nature in order to compel an agreement on the price to be paid for the property, per 49 CFR 24.102(h).	11.
12. The acquiring agency must acquire an equal interest in all buildings, etc., located upon the real property acquired, per 49 CFR 24.105.	12.
13. The acquiring agency must pay recording fees, transfer taxes, etc.; penalty costs for pre-payment of a pre-existing mortgage and the pro rata share of real property taxes paid subsequent to vesting title in the acquiring agency, per 49 CFR 24.106.	13.
14. No property owner can voluntarily donate his property prior to being informed of his right to recieve just compensation.	14.
15. Provisions have been made for rodent control should it be necessary.	15.
16. No owner was intentionally required to institute legal proceedings to prove the fact of the taking of his real property.	16.

Prepared by _____

Title _____

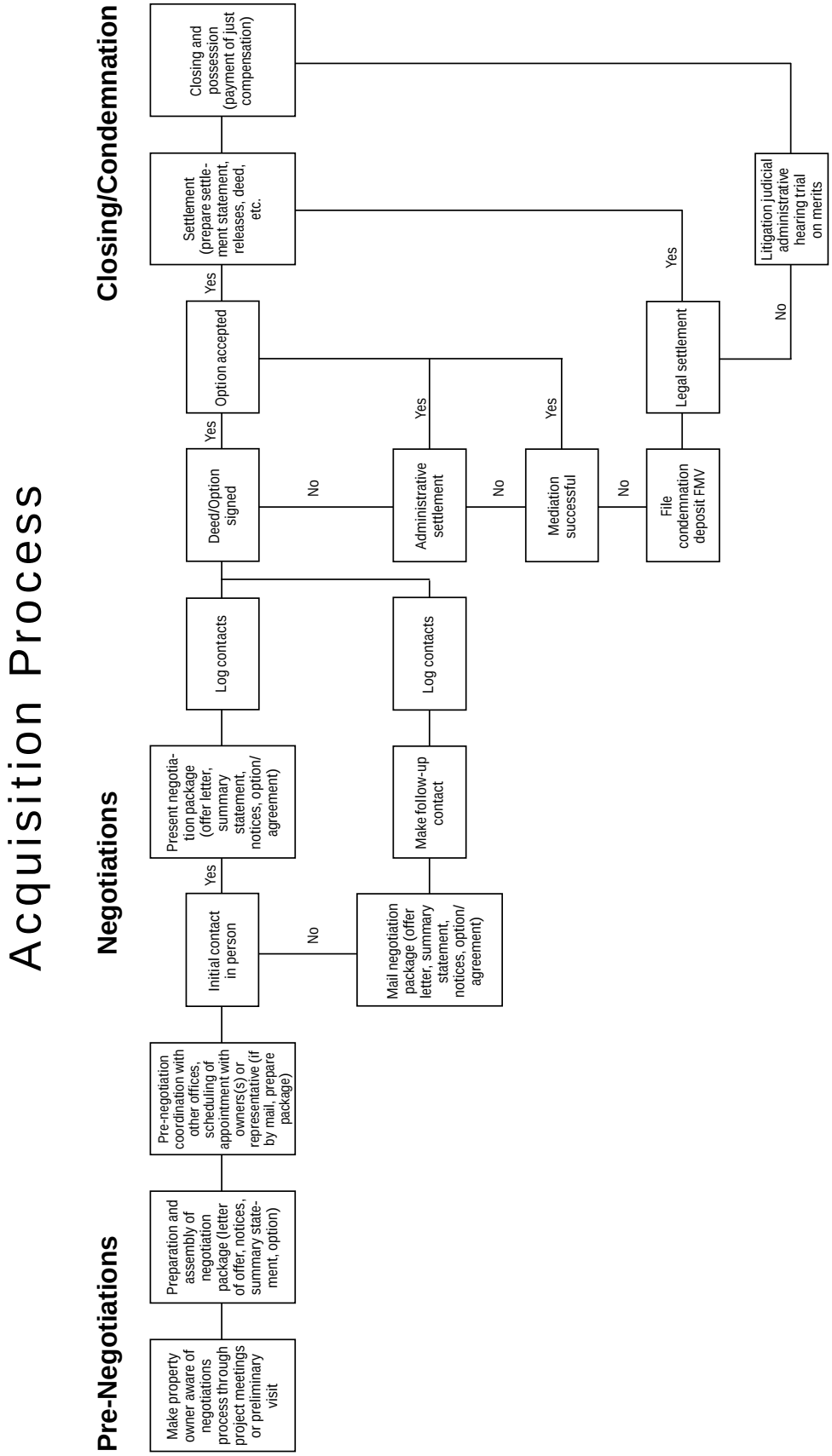
Acquisition Process
Pre-Negotiations
Negotiations
Closing/Condemnation
Make property owner aware of negotiations process through project meetings or preliminary visit
Preparation and assembly of negotiation package (letter of offer, notices, summary statement, option)
Pre-negotiation coordination with other offices, scheduling of appointment with owners(s) or representative (if by mail, prepare package)
Initial contact in person
Yes
No
Present negotiation package (offer letter, summary statement, notices, option/ agreement)
Mail negotiation package (offer letter, summary statement, notices, option/ agreement)
Log contacts
Make follow-up contact
Log contacts
Deed/Option signed
Yes
No
Option accepted
Yes
Administrative settlement
Yes
No
Mediation successful
Yes
No
File condemnation deposit FMV
Legal settlement
Yes
No
Settlement (prepare settlement statement, releases, deed, etc.
Litigation judicial administrative hearing trial on merits
Closing and possession (payment of just compensation)

26.1 General Discussion

It is the policy of the United States Department of Transportation (USDOT) that Disadvantaged Business Enterprises (DBEs) (defined in 49 CFR, Part 23) have the maximum opportunity to participate in the performance of federally-financed contracts or subcontracts. To accomplish this goal, all local agencies and their contractors must take steps to ensure that DBEs are encouraged to compete for construction contracts, procurement contracts, grants, services, financial aid, or other benefits, and that DBEs have full access to these opportunities.

A local agency when participating in programs funded in whole or in part with funds made available by the Washington State Department of Transportation (WSDOT) shall comply with WSDOT's DBE Plan or develop an equivalent plan. The local agency equivalent plan shall have the approval of the Assistant Secretary for TransAid.

WSDOT's Office of Equal Opportunity (OEO) is responsible for the administration and implementation of WSDOT's Plan. OEO will conduct reviews of local agency contractors to ensure compliance with the Plan.

The Assistant Secretary for TransAid will conduct compliance reviews of the local agency's administration of the DBE Plan. A local agency that is found to be in noncompliance may lose its federal funds and/or CA status. A finding of noncompliance by the Assistant Secretary for TransAid will result when a local agency fails to ensure compliance of it's contractor with the DBE requirements or fails to take remedial action at WSDOT or Federal Highway Administration (FHWA) request.

26.2 Procedures

a. **Local Agency DBE Liaison Officer.** The local agency is responsible for ensuring program compliance and monitoring its contractor's DBE activities. To accomplish this, a DBE liaison officer must be appointed by the local agency. This liaison officer must be an administrator responsible to the chief executive of the agency. This administrator should have the authority to delegate the responsibility to the people who perform the contractor compliance function. The liaison officer's duties are to ensure compliance with the DBE Plan by the local agency and by their contractors.

b. **Washington State Office of Minority and Women's Business Enterprise.** The Washington State Office of Minority and Women's Business Enterprise (OMWBE) performs the certification process to determine whether or not a firm meets the DBE criteria to qualify them for FHWA funded projects. Their address is:

   Office of Minority and Women Business Enterprise
   406 South Water
   Olympia, WA 98504
   Telephone: (360) 753-9693

   Only DBE firms that are currently certified as a DBE by OMWBE may be used by prospective bidders on a FHWA funded project.

c. **Establishment of Project DBE Goal.** The TransAid Operations Engineer will review each project to determine if it involves work elements that are conducive to DBE participation. To initiate this review, the local agency must submit an engineer's estimate with their suggested DBE goal to the Regional TransAid Engineer when the contract work is determined. The estimate must show the item quantities and costs of the project.

   If a local agency has any other projects tied to a federally funded project which utilizes one set of bid documents, the total project will be considered a federal aid project for DBE goal setting purposes.

   The TransAid Operations Engineer will then establish a DBE goal for the project. In the establishment of a goal, the following criteria are considered: (1) dollar amount of the contract to ensure that it is large enough to permit efficient subcontracting; (2) the work content of the project which can be subcontracted; and (3) the availability of federally certified DBE firms having the potential to do the required work.

   If a local agency feels the project goal set by the TransAid Operations Engineer is inappropriate, they may submit a request to have it changed. This request must be accompanied by justification based on the above criteria for establishing the contract goal.

   Ordinance established DBE goals for public works projects may be used if they meet or exceed the goal set by the TransAid Operations Engineer. All goals must require the use of a federally certified DBE contractor (not WBE/MBE).

d. **DBE Provisions in the Plans, Specifications, and Estimate (PS&E).** After the goal has been determined, the WSDOT General Special Provision (GSP), "Disadvantaged Business Enterprise Participation" or a WSDOT approved local agency provision shall be included in the PS&E. This GSP is available from the Regional TransAid Engineer. Only the WSDOT GSP is approved for use on an FHWA funded project. A local agency's DBE provision may be used only upon prior approval of the Assistant Secretary for TransAid.

To complete the DBE requirements in the PS&E, the form ”Disadvantaged Business Enterprise Utilization Certification” will be included. This form shall be in the proposal given to each bidder. This form is available from the Regional TransAid Engineer.

e. **Bid Opening.** Each bid proposal must be reviewed to determine if the bid is responsive. Each proposal shall contain the form “Disadvantaged Business Enterprise Utilization Certification” completed by the contractor.

Failure to complete this form will be considered as evidence that the proposal is unresponsive and, therefore, is not eligible for award.

f. **Is the DBE Firm Certified by OMWBE?** The DBE firm named by the contractor in the bid proposal shall be certified as a DBE firm by OMWBE to be eligible for work on an FHWA funded project. To verify whether a firm is certified as a DBE and eligible to perform work on an FHWA funded project, you must call OMWBE at (360) 753-9693. To meet the goals for the project, DBE firms not certified at the time fixed for the bid opening will not be accepted by the local agency for participation, as a COA Contractor, in the project.

g. **Selection of the Successful Bidder.** When the low bidder’s bid meets or exceeds the established DBE goal for the project, the contract may be awarded to the low bidder.

When the low bidder’s DBE goal bid is less than the established project goal, all responsive bids must be averaged to determine the successful low bidder.

The following is an example of how to determine a responsive bid when the low bidder’s DBE bid is less than the established project DBE goal. (In the example, there are four responsive bids for the project, and a DBE goal of 16 percent was established. The fourth bidder’s DBE goal was 17 percent. However, only that amount up to the established project goal may be used when computing the average goal.)

	Example 1		**Example 2**	
	Total Bid	**DBE Bid**	**Total Bid**	**DBE Bid**
Low Bid	$ 99,000	13%	$ 99,000	15%
Second	100,000	16%	100,000	13%
Third	100,500	15%	100,500	16%
Fourth	101,000	16%	101,000	16%
Total of DBE bids		60%		60%
Average DBE bid goals		15%		15%

In Example 1, the second low bidder would be awarded the contract since their DBE bid of 16 percent is either equal to or greater than the average DBE bid of 15 percent. The low bidder’s DBE bid of 13 percent is less than the average and therefore is not a responsive bid.

In Example 2, the low bidder is awarded the contract since their DBE bid of 15 percent is either equal to or greater than the average DBE bid of 15 percent.

h. **Condition of Award Letter.** The condition of award letter carries the same contractural obligation as the contract specifications. A condition of award letter appears as Appendix 46.42. The second, third, fourth, and fifth paragraphs must be included in the letter. The DBE work shall be shown in the fifth paragraph. If a portion of an item is sublet to a DBE and the remainder is done by the contractor or another subcontractor, the DBE’s work must be shown in detail in the fourth paragraph of the letter. Also, any DBE suppliers and manufacturers shall be shown.

Send a copy of this letter and a copy of the “Disadvantaged Business Enterprise Utilization Certificate” to the Regional TransAid Engineer as a part of the award documentation submittal explained in Chapter 45.

Attach a copy of the letter to the contract papers that you send to your contractor for signature. The Regional TransAid Engineer shall be provided information on subletting by DBE contractors.

i. **Monitoring of the DBE During Construction.** The local agency must place special emphasis on the DBE requirements at the preconstruction conference. Changes to a condition of award letter shall be submitted in the form of a change order to the Regional TransAid Engineer.

Project diary documentation of the DBE’s activities on the project must be performed in the same manner as is done on the prime contractor and any other subcontractor’s activities.

In addition to the project diary, the form “DBE On-Site Review” should be completed by the CA Agency for every DBE condition of award (see Appendix 46.42):

- at the start of work, and/or
- at the peak period of work, and/or
- whenever changes in the performance of the work warrants its completion.

The review should be completed per on-site observations, documentation review, and interviews of contractor’s personnel. This completed form becomes a part of the local agency’s project records. Additional forms are available from your Regional TransAid Engineer.

The WSDOT GSP, Disadvantaged Business Enterprise Participation, and Chapter 1 of the WSDOT Construction Manual shall be followed to ensure compliance with the DBE Plan.

In order to satisfy the contract goal, a DBE firm shall perform a commercially useful function. A commercially useful function is defined as: responsibility for executing a distinct element of contract work and carrying out those responsibilities by actually performing, managing, and supervising the work involved. The documentation in the project diary and on the DBE On-Site Review form is the information that the local agency will use to determine whether a DBE is performing a commercially useful function. If there is evidence that a DBE firm is not performing a commercially useful function, immediately contact your Regional TransAid Engineer.

j. **Completion of Construction.** When the contract work is completed, the contractor shall submit the completed form "Affidavit of Amounts Paid DBE Participants" to the local agency. On this form, the contractor shows the actual amount paid to the DBE firm for the contact work. This completed form is required with the final estimate and must be submitted to the Olympia Service Center TransAid Operations Engineer.

k. **Records and Reports.** The local agency will maintain such records and provide such reports as necessary to ensure full compliance with the Plan.

Upon request from the OMWBE, WSDOT, or the USDOT, the local agency shall submit the records deemed necessary for inspection, auditing, and review purposes.

Forms

WSDOT Form 140-542 Affidavit of Amounts Paid DBE Participants

41:LAG2G

Washington State
Department of Transportation

Affidavit of Amounts Paid DBE Participants For Local Agency Ad and Award Projects

Contractor		Agency
Address		Date
State Aid Contract No.	Federal Aid Project No.	Highway No.
Project Title		
Contract Bid Price $	DBE Condition of Award $	

DBE Participant Name and Address	Ethnic Code	Contract Type	Bid Item No.(s)	Amount Paid Participants (including retainage held)

Ethnic Code:		Contract Type:	Total DBE Participation Achieved
B = Black	I = American Indian and Alaskan Native	S = Subcontractor	
H = Hispanic	O = Other	M = Material Supplier	
A = Asian American		JV = Joint Venture	$

AFFIDAVIT

I, the undersigned, do hereby certify that in connection with all work on the project for which this statement is submitted, each DBE participant contracted by me has been paid the amounts shown for bid items, or portions thereof, listed.

	Signature	Title

Notary Seal

Subscribed and sworn before me this _____ day of _____, 19____

✘ _____ Notary Public in and for the state of Washington

residing at _____

THIS FORM IS REQUIRED WITH THE FINAL ESTIMATE FROM THE PRIME CONTRACTOR ON ALL PROJECTS WITH DBE PARTICIPANTS

Distribution: Contractor; Local Agency; Regional TransAid Engineer

27.1 General Discussion

To effectively assure Equal Employment Opportunity (EEO), it is the policy of the Federal Highway Administration (FHWA) to require that all federal aid highway construction contracts include specific requirements to implement the Title VI Program, related civil rights laws and regulations. These specific requirements apply to contractors and all their subcontractors (not including material suppliers) holding subcontracts of $10,000 or more. To be eligible for federal aid funds, the local agency must comply with the civil rights requirements.

The following statement shall be accepted by local agencies and contractors as their operating policy:

> It is the policy of this Company to ensure that applicants are employed, and that employees are treated during employment, without regard to their race, religion, sex, color, national origin, or disability. Such action shall include: employment upgrading, demotion, or transfer; recruitment or recruitment advertising; layoff or termination; rates of pay or other forms of compensation; and selection for training, including apprenticeship, preapprenticeship, and/or on-the-job training.

Local agencies and their contractors must each designate an EEO officer to ensure compliance with the EEO Title VI, Section 504, and training policy.

The Washington State Department of Transportation (WSDOT) will monitor both the local agency and its contractors for compliance as part of the normal project management reviews and through contract compliance reviews of selected contracts.

The local agency, by signature to the Local Agency Agreement, agrees to the following:

a. To assist and cooperate actively with the state in obtaining contractor and subcontractor compliance with the equal opportunity clause and rules, regulations, and relevant orders of the FHWA and/or Secretary of Labor.

b. To furnish the state such information as it may require for the supervision of such compliance and otherwise assist the state in the discharge of its primary responsibility for securing compliance.

c. To refrain from entering into any contract or contract modification subject to Executive Order 11246 of September 24, 1965, as amended, with a contractor debarred from, or who has not demonstrated eligibility for, government contracts and federally-assisted construction contracts pursuant to the Executive Order and other pertinent rules, laws, and regulations.

d. To carry out such sanctions and penalties for violation of the equal opportunity clause as may be imposed upon contractors and subcontractors by the state, FHWA, or the Secretary of Labor pursuant to Part II, subpart D of the Executive Order.

   In addition, the agency agrees that if it fails or refuses to comply with these undertakings, the state may take any or all of the following actions:

   - Cancel, terminate, or suspend the Local Agency Agreement in whole or in part;
   - Refrain from extending any further assistance to the agency regarding the failure or refusal to comply until satisfactory assurance of future compliance has been received from the agency; and
   - Refer the case to the Department of Justice for appropriate legal proceedings.

The local agency must consult the WSDOT/APWA *Standard Specifications*, *Amendments*, *General Special Provisions*, and the WSDOT *Construction Manual* to administer the EEO and training programs.

27.2 Specific EEO Requirements

The special provisions of FHPM 6-4-1-2 and Form FHWA-1273, Required Contract Provisions, must be included in the advertised bidding proposal and made a part of the contract for each contract and each covered FHWA funded highway construction subcontract. Division 1-07 of the current edition of the WSDOT/APWA *Standard Specifications for Road, Bridge, and Municipal Construction* contains the special provisions of FHPM 6-4-1-2.

In order to maintain affirmative action in the employment of minorities, specific minority utilization goals have been established for various construction trades. The WSDOT General Special Provision (GSP), "Equal Employment Opportunity Responsibilities," outlines the goals and timetables for minority and female participation for the "Standard Metropolitan Statistical Area" (SMSA) and "Economic Area" (EA). This GSP or equivalent must be included in each federal aid project.

27.3 Training

To meet federal requirements, each contract must comply with Section 1-07.11(7) of the WSDOT/APWA *Standard Specifications*, applicable GSPs, and Form FHWA-1273.

Training goals are established by the TransAid Operations Engineer on selected federal aid construction contracts. The goals are set based on the formula developed by WSDOT, and the goal setting process takes into account the following factors:

1. The dollar amount of the project (normally TransAid will not set goals on projects of less than $500,000).
2. Type of work. Project must lend itself to training.
3. Availability of minorities and women for training.
4. Geographic location of the project.
5. Duration of the work (normally TransAid will not set training goals on projects of less than 60 working days).

The formula is a combination of opportunity and population ratings based on location. These are multiplied by the dollar amount of the project and provide a base figure for training hours. This is a base figure which is adjusted depending on the length of the project and the type of work. The TransAid Operations Engineer determines the training hours, but the number of trainees is left to the discretion of the local agency. The local agency must submit an engineer's estimate for the duration of the contract to the Regional TransAid Engineer as a basis for the TransAid Operations Engineer to set goals. (The training goals and DBE goals are established at the same time.)

If the local agency has a WSDOT approved EEO/On-the-Job Training (OJT) Plan which sets training goals, the agency may use those goals to establish specific project goals.

27.4 Contract Administration

.41 General. The local agency has the responsibility to:

a. Conduct preconstruction conferences during which EEO and training Special Provisions for federal aid contracts are discussed with the contractor. (Emphasis should be made regarding the applicability of goal-by-craft versus average-of-all-crafts.)

b. Ensure that the contractor posts and maintains notices and posters setting forth the contractor's EEO policy. A supply of OFCCP Poster No. 1420, Equal Employment Opportunity is the Law, shall be made available to the contractor.

c. Monitor on-site compliance with the EEO and training Special Provisions of federal aid contracts.

d. Ensure that their contractors locate, qualify, and increase the skills of minority groups, women employees, and applicants for employment as specified in the training provisions.

e. Prepare and/or ensure the preparation of the required EEO and training reports.

.42 EEO Reports.

a. PR 1391: This report is submitted by the contractor and subcontractors showing the ethnic utilization breakdown on their federal aid highway construction projects under construction during the month of July. The report is a summation of employees on their last payroll period preceding the end of July. The local agency retains this form in its project files.

b. PR 1392: Summation of the July PR 1391 reports received from all contractors and subcontractors that were working on federally-assisted projects during the month of July. This report is prepared by the local agency and sent to the Regional TransAid Engineer by August 30. This report is due at the Olympia Service Center by September 10 annually.

c. Form CC 257-Monthly Utilization Report: This report includes the total work hours for each employee classification in each trade in the covered area for the monthly reporting period. This report is completed each month by the contractor and subcontractor ($10,000 or more). The hours reported represent the contractor's and subcontractor's federal and nonfederal funded projects in the SMSA or EA per the GSP. The completed form will represent a work force greater than what's on your project if the contractor or subcontractor has another project in the same SMSA or EA. The contractor sends one copy to the local agency and the original is sent directly to the OFCCP regional office in Seattle by the 5th of each month.

To monitor the forms submitted during the term of the contract, the local agency will summarize a contractor's progress by completing the "Monthly Employment Utilization Report Worksheet" or a similar form. The results of the summary will show whether the contractor is meeting the employment percentages that appear in the GSP.

.43 Training Reports.

a. Form 272-060A: Federal Aid Highway Construction Annual Project Training Report, is maintained by the local agency's Project Engineer as trainees are approved. Questions 1-9 are taken directly from the Trainee Approval Request (Form 140-50A). Question 10 is to be completed from the project payroll/trainee records. Form 272-060A is due in the Regional TransAid office by June 10.

b. Form 272-061A: Federal Aid Highway Construction Cumulative Training Report, extracts the information taken from Form 272-060A. The Regional TransAid Engineer prepares this report which is due in the Olympia Service Center by June 20.

27.5 Monitoring During Construction

.51 EEO. During the project construction, the local agency must monitor the contractor's performance to ensure compliance with its Title VI and Section 504 EEO policy. To accomplish this, the local agency must designate an EEO officer. The EEO officer's duties are to conduct reviews with the contractor, maintain records, reports, and required Title VI statistical data concerning the contractor's performance, and ensure that the local agency itself is in compliance with its EEO policy.

.52 Training. When training hours are assigned to the project, the local agency must verify that the trainee is on the project and is receiving beneficial training in accordance with the approved training program. When the trainees are on the project, the local agency shall periodically conduct interviews with them to determine if they are receiving the training as specified in the approved training program. The "Trainee Questionnaire" form or similar forms should be used to document the employee interviews and the contractor's compliance with the training requirement.

The contractor will submit certified monthly detailed invoices showing the related weekly payroll number, name of the trainee, total hours trained under the program, previously paid hours, hours due, and the dollar amount due this estimate. These invoices must be kept with the project records and will become part of the temporary final records to be retained for three years after acceptance of the project by WSDOT and FHWA.

27.6 Compliance Review

In addition to the selected compliance review of local agency contracts by WSDOT External Civil Rights (ECR), the TransAid Operations Engineer's Office will review Title VI and Section 504 EEO and training compliance during its regular project management reviews. If, upon such examination, it is determined that further review is needed, the Olympia Service Center TransAid Office may initiate a further investigation.

The evaluation of the local agency's and its contractor's compliance is based on the provisions included in the contract.

Forms

See Chapter 11 of the WSDOT *Construction Manual*.

43:P:LAG2G

Contents

GUIDELINE SECTIONS

Guidelines Overview

- 11 Introduction
- 12 FHWA Funding Programs
- 13 Becoming Certified to Administer FHWA Projects
- 14 Developing Projects Using the Local Agency Guidelines

General Project Development
(Applicable to All Projects)

- 21 The Project Prospectus
- 22 The Local Agency Agreement
- 23 Progress Billings
- 24 Environmental Processes
- 25 Right-of-Way Procedures
- 26 Disadvantaged Business Enterprises
- 27 Equal Employment Opportunity and Training

Special Project Development
(Applicable to Some Projects)

- 31 Using Consultants
- 32 Railroad/Highway Crossing Program
- 33 Emergency Relief Program
- 34 Bridge Selection and Scoping

Design

- 41 General
- 42 Design Standards
- 43 Location and Design Approval
- 44 Plans, Specifications, and Estimates
- 45 State Advertising and Award Procedures
- 46 Local Advertising and Award Procedures

Construction and Post-Construction

- 51 WSDOT Administered Projects
- 52 Local Administered Projects
- 53 Project Closure

Miscellaneous

- 61 Local Agency Force Projects
- 62 Enhancement Projects
- 63 NHS Projects
- 64 Bridge Inspections
- 65 Management Systems

List of Forms

Acronyms/Glossary of Terms

Index

To be eligible for the reimbursement of Federal Highway Administration (FHWA) funds for payments to a consultant, the procedures in this chapter shall be followed. If, however, a local agency elects to retain the consultant at its cost, only state law has to be followed. FHWA has approved procedures outlined in the Washington State Department of Transportation (WSDOT) *Consultant Services Procedures Manual* (M 27-50) which are explained in this chapter.

31.1 General Discussion

Consultant services may be used for any phase of project development as well as for special studies or other assignments within any phase. Using consultants for design and preparation of plans, specifications, and estimates is a common practice when an agency's staff is small or when an agency needs additional expertise. Consultants may also be used during the construction phase for periodic examination and consultation or for full-time technical inspection.

To ensure fair and open competition, local agencies should adopt a policy to distribute work among qualified firms. To accomplish this, local agencies should limit contracts to a duration of two years, unless the scope of the work requires the contract to extend beyond two years.

FHWA regulations prohibit consultants serving in a management role for agreements in excess of $10,000.

FHWA has determined the consultant agreements for right-of-way services must meet the consultant contracting requirements as described herein. **Except if there is federal participation in the acquisition phase of a project, all contracts concerning real property acquisition must be approved by WSDOT through the Region LPA Coordinator prior to execution by the agency.** Sample agreements for services concerning right-of-way appraisal and acquisition are shown in Appendixes 31.81 and 31.82.

A consultant service is professional or technical expertise provided by a consultant to accomplish a specific study, project, task, or other work statement. It does not include purchased services provided by a vendor to accomplish routine, continuing, and necessary services. The definitions of the four professions involved are described in RCW Chapters 18.08, 18.43, or 18.96.

This chapter covers those contracts for architects, landscape architects, land surveying, and engineering services outlined in RCW 39.80.

State law (RCW 39.80) requires that each agency must advertise that agency's requirement for architectural services, land surveying services, or engineering services. The announcement shall state the general scope and nature of the project or work for which services are required and the address of a representative of the agency who can provide further details. An agency can comply with this requirement by: (1) publishing an announcement on each occasion when professional services by a consultant are required by the agency; or (2) announcing generally to the public its projected requirements for any category or type of professional services.

The local agency should encourage consultants to annually submit an annual statement of qualifications and performance data. This information can be used along with that submitted by other firms that respond to the agency's solicitations for consulting work.

Section 319 of Public Law 101-121 prohibits federal funds from being expended by consultants or subconsultants who receive a federal contract, grant, loan, or cooperative agreement to pay any person for influencing or attempting to influence a federal agency or Congress in connection with awarding any of the above.

To assure compliance, FHWA consultant agreements shall abide by the following requirements:

1. A certification form, Exhibit A-3, shall be included in all FHWA consultant agreements exceeding $100,000 in federal funds. Consultants signing this certification shall agree that they will require the language of this certification to be included in all subconsultant agreements which exceed $100,000 and all subconsultants shall certify and disclose accordingly.
2. During the period of the performance of a contract, consultants or subconsultants must file a disclosure form (SF-LLL) at the end of each calendar year quarter in which any event that requires disclosure occurs, and mail it to the FHWA through the TransAid Operations Engineer.

Federal regulations require an audit evaluation prior to negotiation of proposals for which the total costs exceed or are expected to exceed $250,000. Audit evaluation of proposals of less than $250,000 shall be conducted when there is inadequate knowledge concerning the prospective consultant's accounting policies, cost systems, and/or previous unfavorable experience. An audit conducted by another agency or private accounting firm will satisfy this requirement if the audit criteria used by the other agency or accounting firm conforms with 48 CFR 31. However, per 23 CFR 172.7(b), the TransAid Operations Engineer would have to review the audit performed by another agency or accounting firm prior to the signing of the agreement.

Prenegotiation audits provide the necessary data to assure that the consultant has an acceptable accounting system, has sufficient resources to complete the work on time, has adequate and proper justification of the various rates charged to perform work, and is aware of the FHWA's cost eligibility and

documentation requirements. Final audits are required on all contracts exceeding $100,000. The Local Agency Agreement should anticipate a charge averaging $5,000 for these audit costs.

Federal regulation, 48 CFR, Chapter 1, Section 15.804, requires that a "Certificate of Current Cost or Pricing Data" be executed by the consultant prior to award of a negotiated contract expected to exceed $100,000. The Certificate is shown as Exhibit A-4 to the standard agreement form.

When a local agency operating under Certification Acceptance (CA) wishes to engage a consultant for engineering services on projects using federal funds, an agreement will be executed. If the cost of consulting services is $10,000 or more and the standard consultant agreement (see forms) is not used, or if the agency is not approved for CA, the agreement must be submitted to the Washington State Department of Transportation (WSDOT) for approval prior to execution.

In the case of projects covering two or more distinct phases, when the cost for the second phase depends on decisions reached in the first phase, the agreement should cover only the first phase. The agency is not obligated to use the same consultant firm for all phases. The local agency solicitation must state the possibility of a two-phase agreement. Separate consultant agreements may be considered for preliminary engineering and construction engineering. The agreement for preliminary engineering should state that the consultant selected may be considered for the construction phase. The engagement of the consultant to complete subsequent phases should depend upon the consultant's satisfactory performance on prior work and upon negotiation of an agreement for the subsequent phase(s).

In cases where a consultant is hired to prepare an Environmental Assessment or an Environmental Impact Statement, the first agreement would include preliminary engineering up to final approval of the environmental documents and design. Preparation of the PS&E could be under a separate agreement, and the consultant would be selected in accordance with Section 31.3.

Sections 31.2 through 31.7 of this chapter discuss the steps in selecting and utilizing consultants, including:

- Securing approval to hire a consultant.
- Soliciting consultant proposals.
- Selecting the consultant.
- Negotiating the consultant contract.
- Administering the consultant contract.

31.2 Securing Approval to Hire Consultants

If the agency is not approved for CA, the request for use of consultants shall be submitted with the draft consultant agreement to the Regional TransAid Engineer for approval. The request shall include the following:

1. Project location and termini.
2. A description of the work in sufficient detail so that an estimate of cost can be reasonably checked against the work.
3. An estimate of the total project cost.

   Note: The above items are found in the Project Prospectus (Chapter 21).

4. A statement that the agency "does not have adequate qualified personnel to perform the additional work within the time limit."
5. The approximate number of calendar days required by the consultant to do the work.
6. A supporting estimate showing the breakdown of work, including work-hours and average rate per work-hour, overhead and profit, and direct non-salary items that may be used during the life of the contract. This estimate should be itemized so that the selected consultant may fill out a similar estimate. Separate phases of work (preliminary engineering, construction engineering) shall be shown separately.

The estimate must be prepared using WSDOT Form 140-012, "Independent Estimate for Consulting Services" (see forms). Show the date prepared and the signature of the person preparing the estimate. The estimate must be prepared prior to any negotiation with a consultant. The person preparing the estimate must be an agency employee or another consultant.

31.3 Solicitation and Selection of Consultants

Consultants may be solicited for: (1) a specific project; (2) a specific stage of a project (e.g., Design Report); (3) general engineering services (e.g., supporting services of an agency's staff in studies, design, etc.); (4) for more than one project (e.g., several small bridge design projects); or (5) for a combination of the aforementioned.

Consultant selection shall be conducted in a manner that provides maximum open and free competition. To this end, the local agency shall publish a solicitation requesting sufficiently detailed statements of qualifications to provide a basis for selecting the most qualified proposer. The advertisement must appear in a local newspaper (official legal publication for the agency), other newspapers as necessary, to give adequate coverage. The consultant selection process provides an opportunity for small and disadvantaged business enterprises to obtain an equitable share of the work for which consultants are engaged as may be consistent with the project scope and capabilities of available small and disadvantaged owned firms. In the event that there is justification to use a sole source consultant, approval is required by request through the TransAid Service Center.

The local agency should use the following procedures as a minimum:

1. Solicitations of qualification statements must incorporate a clear and accurate description of the technical requirements for the service to be procured. Solicitations must clearly set forth all qualification requirements to be used in evaluating qualifications. All prospective consultants must be advised that the EEO Compliance Review Report Form will be used on the project. The consultant's past performance in the use of minority or women's business enterprises as subconsultants will be part of the consideration for selection.
2. The local agency shall establish guidelines for technical evaluation of the qualifications received, determination of finalists for the purpose of written or oral discussions, and selection for contract award.

If a local agency is not approved for CA, its written selection procedures shall be submitted to the Regional TransAid Engineer for approval.

The local agency should have the following documentation in the project file:

- The names of a minimum of three consultants considered for the work.
- Consultant selected and reasons why this consultant was chosen over the others considered.

For CA agencies, the local agency should document the approval. If a preaward audit is required, it shall be done prior to negotiations with the selected consultant unless a provisional hourly rate method is used, and adjustments can be made during the contract. Following this, the local agency may begin negotiations with the consultant.

If the local agency is not approved for CA, the documentation shall be submitted to the Regional TransAid Engineer for approval.

31.4 Negotiating the Consultant Agreement

The agency will notify the selected consultant and invite the consultant to submit a detailed proposal.

The consultant should be furnished a detailed job description and an itemized list of work activities. Consultants should divide the project into work units and related time units in such a manner that their estimate can be readily reviewed. Consultants shall use their own estimates of work hours, rates of pay, overhead, profit, and itemized direct nonsalary costs based on their work force and past job experience.

The final agreement must specify the maximum amount payable. The basis for establishing the maximum amount should be documented and provisions should be made for adjustment in the maximum amount to accommodate changes in the work distribution or workload.

.41 Method of Payment. The following are acceptable methods of payment to a consultant on an FHWA funded project:

a. Lump Sum. This method of compensation is not acceptable for construction administration agreements. This method of compensation is appropriate if the scope of work (quantity and type) can be clearly defined. Lump sum compensation is generally used for investigations, studies, basic services on design projects (e.g., design reports, plans specifications and estimates (PS&E), and preparation of operating, maintenance, and training manuals). It requires the requesting agency to prepare an estimate detailing the hours required for each type of work as well as the hourly rate. The estimate is prepared by agency personnel who are qualified and familiar with the type of work contemplated and is signed and dated.

b. Cost Per Unit of Work. This method of compensation is appropriate when the unit cost of the work can be determined in advance with reasonable accuracy, but the extent of the work is indefinite. An example of this type of work is soils investigation where costs are based on per foot of drilling or installation of observation wells. Other examples of work paid for by the cost per unit of work include soil testing, structural foundation analysis and reports, expert witness testimony, and construction contract administration.

c. Actual Costs Plus a Fixed Fee. This method of compensation is used when the extent, scope, complexity, character, or duration of the work cannot be reasonably determined in advance. Types of work that have been contracted with the actual cost plus a fixed fee method are preparation of environmental documents, project design documents, and PS&Es for large or complex projects including major bridges. The consultant is reimbursed for all eligible direct and indirect costs within defined limits plus a predetermined amount as a fixed fee. The costs are determined by:

   - The salaries of employees for the time directly chargeable to the project, and salaries of principals for the time they are productively engaged in work necessary to fulfill the terms of the agreement. Actual rates of pay for principals actively involved in the project will be included in each agreement.
   - Direct nonsalary costs incurred in fulfilling the terms of the agreement. Travel expenses are limited to the maximum allowed by WSDOT Directive D 13-50.
   - The consultant's overhead or indirect costs to the extent they are properly allocable to the project. A break out of overhead items will be included in each agreement. Contact your Regional TransAid

Engineer for maximum allowable overhead or fixed fee rates.

- Management reserve funds which are an option of the agency and are included for overruns of direct salary and overhead costs that might occur under the existing scope of work.

The fixed fee is derived by considering the financial and professional investments required of the consultant; the extent, scope, complexity, character, and duration of the services; the degree of responsibility to be assumed by the consultant; and other factors contemplated at the time of negotiations. These shall be documented for reference in case it becomes necessary to adjust the amount of the fixed fee.

Shown as an exhibit in the agreement are the consultant's estimate of work, cost rates, overhead rate, and the fixed fee.

d. Specific Rates of Pay. This method of compensation is based upon specific rates of pay for each class of employee and is appropriate as a basis of payment for relatively minor items of work of indeterminable extent. The method requires constant and direct control of the time and class of employees used by the consultant. The rate of pay can be established through one of two processes:

1. Negotiated hourly rate agreements establish the rate of pay through an audit of the consultant before he starts work.
2. Provisional hourly rate agreements use the hourly rate determined from an audit of the consultant's last completed fiscal year. Provisional rates are established at the beginning of the project and are used until the results of the new audit are known. The provisional rates are then retroactively adjusted to reflect actual costs.

Certain types of soils investigation agreements are an example of this method of compensation. Other examples include term agreements for planting inspections, bridge inspections, expert witness testimony, training presentations, construction inspections, supplementing agency staff on small design projects or studies, and for "on-call services."

E. Task Order Agreements. This type of agreement is used with Negotiated and Provisional Hourly Rate methods of payment. Each item of work is listed by task assignment in the scope of work and each assignment is individually negotiated with the consultant. The maximum amount established for each assignment is the maximum amount payable for that assignment unless modified in writing by the local agency.

While a regular negotiated hourly rate agreement is for a specific project, a single task order agreement can be used on a series of projects. Once the agreement is established, each time the consultant's services are needed a formal task assignment document is completed that describes the work, location, maximum amount payable, and completion date for the task. The agreement does not have to be renegotiated for each new task, therefore saving time. An example of a task order agreement would be one for performing construction inspection over a two-year period.

.42 Actions Following Receipt of Consultant's Proposal. Upon receipt of the consultant's proposal, the agency should compare the consultant's offer with its own proposal, examining the scope of work, work hours, and estimate of cost. The agency should attempt to negotiate an agreement with the consultant. When negotiations with the consultant are completed, if the agency is not approved for CA, two copies of the unsigned negotiated consultant agreement, including exhibits, shall be submitted to the Regional TransAid Engineer.

Information explaining any difference in work hours or costs between the agency's independent estimate and the negotiated consultant fee must be approved by the agency (CA agencies) or WSDOT and kept in the project files.

To document that a local agency is using a consultant, a copy of the executed agreement shall be sent to the Regional TransAid Engineer.

31.5 Standard Agreement

When the cost of consulting services is $10,000 or more, local agencies must use the Standard Consultant Agreement (see forms) or a Local Agency Agreement approved by WSDOT. If this is not possible, the agreement developed by the local agency must be approved by WSDOT prior to the execution of the document. Standard agreement forms are available from the Regional TransAid Engineer.

Agreements that involve research, developmental, experimental, or demonstration work may require patent or royalty rights. In this case, the Standard Agreement should be supplemented by adding the appropriate language to account for this.

If the agreement is for design work, the local agency shall designate the basic premises and criteria for the design. The scope of work shall include a list of the criteria to be used.

The standard agreement has been developed to allow the local agency to select the appropriate parts of exhibits of this chapter and assemble them into a complete agreement package for all types of consulting work.

Exhibits are provided for the various payment methods, depending upon which one the agency selects. Examples of types of work for each contract payment type have already been discussed under Section 31.41, "Method of Payment." Most exhibits are common to any contract, others require selection by the person creating the standard agreement.

The following are common to the lump sum, cost plus fixed fee, specific rates of pay, or cost per unit of work contracts.

- Consultant Agreement (see forms)
- Exhibit A-1, Certification of Consultant and Certification of Agency Official
- Exhibit A-2, Certification Regarding Debarment, et al.
- Exhibit A-3, Certification Regarding the Restrictions of the Use of Federal Funds for Lobbying
- Exhibit A-4, Certificate of Current Cost or Pricing Data
- Exhibit E, Breakdown of Overhead Costs
- Exhibit F, Payment Upon Termination of the Agreement by the Agency Other Than for Fault of the Consultant
- Exhibit G, Subcontracted Work
- Exhibit H, Additional Liability Requirements

The following must be selected depending upon the type of payment.

- Exhibit B-1 for standard agreements
- Exhibit B-2 for task order agreements
- Exhibit C-1 for lump sum contracts
- Exhibit C-2 for cost plus fixed fee contracts
- Exhibit C-3 for negotiated hourly rate contracts
- Exhibit C-4 for provisional hourly rate contracts
- Exhibit C-5 for costs per unit of work contracts
- Exhibit D-1 for lump sum, cost plus fixed fee, or cost per unit of work contracts
- Exhibit D-2 for specific rates of pay contracts

.51 Risk Management and Added Insurance Requirements. The agency may change Section XIII of the Standard Agreement to reduce the requirement for Consultant Professional Liability from One Million Dollars to the amount of the Agreement, whichever is the lessor. This should be done for work that involves minimal risk, such as studies. For many consultant firms, covering the one million dollar liability would be an added cost to their overhead or directly to the project.

In the event the agency determines that added liabilities or an insurance policy are warranted beyond the amount allowed in the Standard Agreement, they should negotiate this with the Consultant after all other Agreement provisions have been negotiated. This will avoid interference with the requirement that engineering qualifications, rather than the ability to obtain insurance is the criteria for selection.

The agency will determine the insurance normally provided in the consultant's overhead costs, and will identify the costs beyond that amount on Exhibit H. This exhibit is not needed if the standard agreement provisions are used. These costs will be considered direct project costs, and will not be billed to an FHWA funded project.

In the event that Exhibit H is warranted, it should be sent with the risk analysis to the Regional TransAid Engineer for approval who will forward it to Headquarters for FHWA review, prior to execution by the agency and consultant.

The agency risk analysis should show that the work warrants this added cost, and that consideration has been given to less costly solutions, including assuming the risk, or insuring the risk outside of the agreement as an agency cost, or adding a third tier of engineering overview to check the work.

To calculate the risk requires an ability to judge the likely amount of a jury's award if liability is determined.

A suggested method is to determine the number of comparative cases presently existing within this state and to develop the probabilities based upon historic awards.

31.6 Supplements to the Agreement

An agreement shall be supplemented in writing when work which falls outside the scope of the original agreement is requested. This may be done by a supplemental agreement. The supplemental agreement should include:

1. A statement that the original agreement will be supplemented to add/change/amend conditions.
2. A scope of work described in sufficient detail to clearly outline what additional work the consultant is to do.
3. The mode of payment — e.g., cost-plus-fixed-fee, specified hourly rate, daily rate, and any indirect cost. (***Note:*** Always include a maximum amount payable.) Section V of the original agreement should be reviewed prior to negotiating any supplements.
4. A specific time for beginning and completing the project in calendar days or day and month of the year.
5. A statement of whether subletting is authorized; if so, to whom, for what, and the amount payable.
6. A summary of the estimated costs of the original agreement plus those of the supplement(s).
7. Provisions that give both parties to the agreement the authority to act.

Supplemental agreement and attachment forms are in the forms section of this manual. They are available from the Regional TransAid Engineer.

31.7 Managing, Monitoring, and Evaluating the Agreement

The agency shall assign one of its personnel as project administrator to work with the consultant. The project administrator should:

1. Prepare supplements to existing agreements for services beyond the scope of the original agreement and include the agency's independent estimate of the costs for the work involved.
2. Ensure that no work is done or costs incurred until the agreements and supplements are approved by the approving authority and executed by the proper parties.
3. Perform liaison between the agency and the consultant to assure compliance with the terms of the agreement.
4. Monitor the consultant's progress reports to ensure that problem areas are reported and corrective action taken.
5. Establish controls to monitor the time for completion of each agreement to ensure that the specified time limitations are not exceeded.
6. Ensure the accuracy of bills presented by the consultant and their consistency with the work performed.

   The invoice will indicate, by name, all employees that worked on the project during the billing period. The classification of each employee, the hours worked, the hourly wage rate, and the total wages paid will also be shown on the invoice.

   Direct nonsalary costs, such as travel, reproduction, telephone, supplies, and computer costs, shall be supported by a copy of the invoice or billing instrument the consultant received for payment. For example, a copy of the telephone company's itemized listing showing each call is necessary to verify the billing for long distance telephone calls.

   Maintain cumulative cost records for each agreement to assure that costs are allowable, allocable, and reasonable.
7. Establish controls to prevent payment in excess of agreement amount.
8. Monitor the consultant to ensure compliance with Equal Employment Opportunity provisions of the agreement. The project administrator may use the report form included in the forms section or a similar form.

Upon completion of the work under the consultant agreement, the agency will ensure that all terms and conditions of the agreement have been complied with and that all services to be performed under the agreement have been completed prior to final release of the consultant.

WSDOT will review the documentation on selected projects and monitor the consultant selection procedures used by the local agency. The degree of monitoring will be determined by WSDOT and will depend on the nature and character of each project.

The local agency should evaluate the consultant's performance. A sample evaluation form is provided with the forms.

Appendixes

31.81 Sample Personal Services Contract for Appraiser

31.82 Sample Consultant Agreement for Negotiation Services

Forms

DOT Form 140-012 Independent Estimate for Consulting Services

Standard Consultant Agreement

Supplemental Agreement

2:P:LAG3

PERSONAL SERVICES CONTRACT

It is mutually agreed between the Washington State Department of Transportation, hereinafter referred to as the "Department," and the undersigned, hereinafter referred to as the "Contractor," that:

1. The Contractor shall provide the services specified in Section 18 of this contract. The Contractor shall not be entitled to compensation for the services rendered under the terms of this contract unless and until the services are satisfactory to the Department. Any dispute relating to the quality of acceptability of the services furnished; to the acceptable fulfillment and performance of the contract on the part of the Contractor; and/or compensation due the Contractor shall be decided by the Chief Right of Way Agent, Department of Transportation. All reports called for under the terms of this contract shall become the property of and shall be retained by the Department.
2. The Department shall have the right to cancel services under the terms of this contract by giving notice by certified mail to the Contractor, and shall be liable for services at the rates specified herein, less any prior interim payments only to the date of receipt of such notice by the Contractor. Upon payment of such sums, the Department shall be discharged from all liability to the Contractor and this contract shall be terminated.
3. If, due to the Contractor's error or oversight, corrections to the services contracted for herein are necessary, the Contractor will make such corrections at no additional cost to the Department and will submit such corrections to the Department within ten (10) days of receipt of the Department's request.
4. The services to be furnished under the terms of this contract shall be performed by the Contractor and the Contractor's bona fide employees, and shall not be delegated or subcontracted to any other person or firm.
5. The Contractor warrants that it has not employed or retained any company, firm, or person, other than a bona fide employee working exclusively for the Contractor, to solicit or secure this contract; and that it has not paid or agreed to pay to any company, person or firm, other than a bona fide employee working exclusively for the Contractor, any fee, commission, percentage, brokerage fee, gift, or other consideration contingent upon or resulting from the award or making of this contract. For breach or violation of this warranty, the Department shall have the right to annul this contract
6. During the performance of this contract, the Contractor, for itself, its assigns and successors in interest, agrees as follows:
   a. COMPLIANCE WITH LAWS AND REGULATIONS: The Contractor shall comply with the Regulations relative to nondiscrimination in Federally assisted programs of the Department of Transportation, Title 49, Code of Federal Regulations, Part 21, as they may be amended from time to time, (hereinafter referred to as the Regulations), which are herein incorporated by reference and made a part of this contract. The Contractor shall comply with the State Law Against Discrimination, Chapter 49.60 RCW and any regulations adopted thereto.
   b. NONDISCRIMINATION: The Contractor, with regard to the work performed by it during the contract, shall not discriminate on the grounds of age, sex, marital status, race, creed, color, national origin, or the presence of any sensory, mental, or physical handicap unless based upon a bona fide occupational qualification, in the selection and retention of subcontractors, including procurements of materials and leases of equipment. The Contractor shall not participate either directly or indirectly in the discrimination prohibited by Chapter 49.60 RCW or by section 21.5 of the Regulations, including employment practices when the contract covers a program set forth in Appendix B of the Regulations.
   c. SOLICITATIONS FOR SUBCONTRACTORS, INCLUDING PROCUREMENT OF MATERIALS AND EQUIPMENT: In all solicitations either by competitive bidding or negotiation made by the Contractor for work to be performed under a subcontract, including procurement of materials or leases of equipment, each potential subcontractor or supplier shall be notified by the Contractor of the Contractor's obligations under this contract and the Regulations relative to nondiscrimination on the above grounds
   d. INFORMATION AND REPORTS: The Contractor shall provide all information and reports required by the Regulations or directives issued pursuant thereto, and shall permit access to its books, records, accounts, or other sources of information, and its facilities as may be determined by the State Department of Transportation or the Federal Highway Administration to be pertinent to ascertain compliance with such Regulations, directives, or laws. Where any information required of a contractor is in the exclusive possession of another who fails or refuses to furnish this information, the Contractor shall so certify to the State Department of Transportation, or the Federal Highway Administration as appropriate, and shall set forth what efforts it has made to obtain the information.
   e. SANCTIONS FOR NONCOMPLIANCE: In the event of the Contractor's noncompliance with the nondiscrimination provisions of this contract, the State Department of Transportation shall impose such contract sanctions as it or the Federal Highway Administration may determine to be appropriate Including but not limited to:
      (1) withholding of payments to the contract until the contractor complies, and/or
      (2) cancellation, termination or suspension of the contract, in whole or in part
   f. INCORPORATION OF PROVISIONS: The Contractor shall include the provisions of paragraphs a through e in every subcontract, including procurements of materials and leases of equipment, unless exempt by the Regulations, or directives issued pursuant thereto. The Contractor shall take such action with respect to any subcontract or procurement as the State Department of Transportation or the Federal Highway Administration

1

may direct as a means of enforcing such provisions including sanctions for noncompliance; provided, however, that, in the event a Contractor becomes involved in, or is threatened with, litigation with a subcontractor or supplier as a result of such direction, the Contractor may request the State Department of Transportation to enter into such litigation to protect the interests of the State; and, in addition, the Contractor may request the United States to enter into such litigation to protect the interests of the United States.

7. The Contractor warrants that, if it is fully or partially employed by any public agency other than the Department, its acceptance of this contract is with the consent of such agency; that the Contractor shall spend no time in the performance required in this contract during which time the Contractor would normally be employed and paid by such agency; and that the acceptance of this contract will not interfere with any obligations the Contractor may have to such agency.
8. The Contractor agrees to indemnify, defend and hold the State and its officers and employees harmless from and shall process and defend all its own expense all claims, demands or suits at law or equity arising out of this Agreement and/or the Contractor's and/or its subcontractor's performance or failure to perform any and all duties prescribed by the Agreement; provided that nothing herein shall require the Contractor to indemnify the State against and hold harmless the State from claims, demands or suits based solely upon the conduct of the State, its officers or employees and provided further that if the claims or suits are caused by or result from the concurrent negligence of (a) the Contractor's agents or employees and (b) the State, its agents, officers and employees, this indemnity provision with respect to claims or suits based upon such negligence shall be valid and enforceable only to the extent of the Contractor's negligence or the negligence of the Contractor's agents or employees.
9. The Contractor agrees that any duly authorized representative of the Department or of the Federal Highway Administration in the official conduct of its business shall have access to and the right to examine any directly pertinent books, documents, papers, photographic negatives, and records of the Contractor involving the services provided under the terms of this contract at any time during normal business hours during the life of this contract and for three years after the date of the final payment under this contract.
10. The Department is contracting for the Contractor's independent performance of the specified services. Should the Department employ another contractor to perform the same services, the Contractor shall not discuss or otherwise exchange information with such other contractor.
11. The Contractor will not commence work under this contract, or any revision thereto, until a commencement date is provided in writing by the Department. Billings for services performed prior to the said commencement date will not be honored.
12. In the performance of the services under this contract, the Contractor shall comply with all applicable Departmental regulations, State and Federal laws, regulations and procedures.
13. The Contractor shall remove any employee from assignment to perform services under this contract immediately upon receipt of written request to do so from the Department's Chief Right of Way Agent.
14. The Contractor shall comply with the Federal Fair Labor Standards Act and any other legislation affecting its employees and the rules and regulations issued thereunder; and shall save the Department free, clear and harmless from all actions, claims, demands and expenses arising out of said Act and any rules and regulations that are or may be promulgated in connection therewith.
15. The Contractor assumes full responsibility for the payment of all payroll taxes, use, sales, income or any other form of taxes fees, licenses, excises, or payments required by any Federal or State legislation which are now or which may be enacted during the term of this contract as to all the Contractor's employees, and as to all the duties, activities, and requirements of the Contractor in the performance of this contract.
16. Upon completion or termination of this contract, the Contractor shall turn over all documents, records and file materials to the Department
17. The services required under this contract are in connection with the following project:
    Project No.: _____ ; Title: _____

    Federal Aid No.: _____; Charge No.: _____
18. The Contractor shall provide the following described services under the terms of this contract:

19. The Contractor shall be paid _____ dollars ($ _____) for all services and expenses under this contract; provided that the total reimbursement under this contract shall not exceed _____ dollars ($_____). Such payment shall include all the Contractor's expenses in the performance of this contract unless otherwise specified in Section 25. The Contractor's invoice shall include: the project title, parcel numbers, description of the service rendered, the number of days or partial days allocable to each parcel, and the dates worked.
20. The project for which the services of the Contractor are required may involve litigation of claims against or brought by the State. All work performed by the Contractor is strictly confidential. No disclosure of the work performed by the Contractor shall be permitted without the prior express consent of the Department. The services to be performed

2

under this contract do not include services as an expert witness; in the event of the commencement of litigation, services as an expert witness would be the subject of a separate agreement.

21. The Contractor shall satisfactorily complete the services contracted for herein on or before _____ On said date this contract shall terminate. Billings for services performed after the said termination date will not be honored.
22. Revisions to this contract may be made only by the mutual agreement of both parties to this contract to execute a Contract Revision.
23. To assist the Contractor in fulfilling the termination of this contract, the Department will furnish the following:

24. The Appraisal Program Manager, Joseph H. Granger, (206)753-6239, will supervise the performance of this contract and is the Contractor's contact with the Department in all matters pertaining to this contract.
25. Special provisions:

26. This Personal Service Contract is hereby tendered and the terms and obligations hereof shall not become binding on the State of Washington unless and until accepted and approved hereon in writing for the State of Washington, Department of Transportation, by the Secretary of Transportation or his duly authorized representative.

Dated this _____ day of _____

Approved as to form:

/S/ 10-26-81
Assistant Attorney General, Date

Contract proposed by:

_____
Appraisal Program Manager,WSDOT Date

Accepted and Approved:
WASHINGTON STATE
DEPARTMENT OF TRANSPORTATION

_____
By

_____
Title

_____
Date

CONTRACTOR

_____
By

_____
Title

_____
Typed Name

_____
Address

_____

_____

_____
Phone Tax ID Number

_____
Contract Number

Federal Aid No._____

CONSULTANT AGREEMENT FOR NEGOTIATION SERVICES

THIS AGREEMENT, made and entered into on this _____ day of _____, 198____, by and between the CITY/ COUNTY of _____, WASHINGTON, hereinafter called the "AGENCY," and the consulting firm of _____ whose address is _____, the location in Washington State at which work will be available for inspection, hereinafter called the "CONSULTANT."

WHEREAS, the AGENCY has not sufficient qualified employees to accomplish the Right-of-Way Acquisition and Relocation Services on this proposed contract and the AGENCY deems it advisable and is desirous of engaging the professional services and assistance of a qualified consulting firm to provide the necessary acquisition services, and

WHEREAS, the CONSULTANT has indicated that he desires to do the work set forth in the Agreement upon the terms and conditions set forth herein.

NOT, THEREFORE, in consideration of the terms, conditions, covenants, and performances contained herein below, the parties hereto agree as follows:

I
PROJECT IDENTIFICATION

The project is entitled: _____. The property is located in _____ (Section, Township, and Range). The project consists of _____ parcel(s) of real property to be acquired for highway purposes, and as shown on the AGENCY right-of-way plans which is made reference to and made a part of this contract.

II
SCOPE OF WORK

The CONSULTANT shall acquire on behalf of the AGENCY the real property referenced in Section I of this Agreement, using procedures specified by the AGENCY and in accordance with the Washington State Department of Transportation *Right-of-Way Manual*, which by this reference is made a part of this Agreement.

The service rendered by the CONSULTANT shall be as follows:

A. APPRAISAL:

The CONSULTANT shall furnish appraisals on all parcels in the project to the AGENCY. The AGENCY shall provide for appraisal review. The appraisals will conform to the form shown in *LOCAL AGENCY GUIDELINES MANUAL*, WASHINGTON STATE DEPARTMENT OF TRANSPORTATION which by reference is made a part of this Agreement.

(If appraisal is not to be included in Agreement, then strike out.)

B. ACQUISITION:

Upon notification and receipt of Determination of Value from the AGENCY, the CONSULTANT will commence negotiations. If it becomes apparent that negotiations have reached an impasse and sufficient time has passed for the property owner to make a settlement decision, then the CONSULTANT shall provide the AGENCY with written notification. The filing of condemnation proceedings shall be the responsibility of the AGENCY.

Upon completion of negotiations with property owners and clearing of all lien encumbrances, the CONSULTANT shall transmit to the AGENCY all instruments, including payment vouchers, for their acceptance or rejection. The recording of instruments and payment to property owner will be the responsibility of the AGENCY.

C. RELOCATION ASSISTANCE:

The Contractor will provide relocation assistance services to all displacees on the project in accordance with state and federal standards, and as directed by the County.

III
OBLIGATIONS OF CONSULTANT

A. CONSULTANT shall prepare all documents necessary to convey to the AGENCY, valid title to the needed rights-of-way and report the results of negotiations, working time, and business expense on the project.

B. CONSULTANT shall assure that no less than three personal contacts are made with each interested party (owner) in order to acquire valid title to needed property rights as shown on the project map or as instructed in writing by the AGENCY.

C. CONSULTANT shall on the first (but no later than the second) contact explain the AGENCY's offer orally and in writing and request execution of appropriate conveyance by the owner to the AGENCY of needed rights-of-way in consideration of the amount of the offer made.

D. CONSULTANT shall assure that negotiations shall be performed only to the limit of authority delineated by the title reports, project maps, determination of fair market value, manual of procedures, acquisition schedule, or written instructions issued by the AGENCY.

E. CONSULTANT shall assure that a complete, legible diary of each contact to include the time, place, amount of offer, to whom offer was made, all parties present, and owner's response in a form furnished by the AGENCY and to be returned to the AGENCY for permanent records.

F. CONSULTANT shall attempt to obtain release of all liens of encumbrances necessary to vest valid title to required property rights in the AGENCY, however, such liens or encumbrances that cannot be released, the CONSULTANT shall notify the AGENCY in writing for instructions.

G. CONSULTANT on or before project cut-off date shall furnish transmittal of diary, miscellaneous correspondence, vouchers, and valid conveyances pursuant to all negotiated transactions or written recommendations pursuant to future negotiations in those cases where settlement failed. All work shall be submitted as completed to the AGENCY for acceptance or rejections.

H. CONSULTANT shall provide relocation assistance to persons or businesses that will be displaced, computing relocation benefits, monitoring progress of individual relocations, and work within the requirements of the Uniform Relocation Assistance and Real Property Acquisition Act.

I. CONSULTANT shall work such days and hours as may be necessary to meet with interested property owners that may not be available during regular working days or hours.

J. CONSULTANT shall abide by decisions made by the AGENCY on questions concerning acceptability of work performed on the project. All decisions made by the AGENCY are final.

K. CONSULTANT shall correct any deficient work performed by him or his employees on the project and deliver corrected work to the AGENCY at his own expense. Corrected work shall be delivered to the AGENCY within _____ days from the date of request.

L. CONSULTANT shall remove any employee from assignment to this project immediately upon written request by the AGENCY.

M. The CONSULTANT agrees to make available for inspection and audit all records of this Agreement to the AGENCY, state, and federal governments at any time during the term of this Agreement and for a period of three years from the date of final payment.

N. CONSULTANT shall be available for consultation with AGENCY, state, and federal representatives after completion of this Agreement should the need arise.

Note: Either of the following two (2) sentences should be added:

1. Said consultation shall be a part of this Agreement if it has to do with explanation of costs and settlement and be of no further cost to the AGENCY.

2. Said consultation shall be contracted for by separate agreement if it involves litigation.

Note: If appraisals are being subcontracted for then, agreement should state the name and address of firm or individual, amount of contract, and show amount (charge) for each parcel.

IV
OBLIGATIONS OF AGENCY

A. AGENCY shall furnish applicable manuals of procedures, appropriate policy directives concerning procedures or expense reimbursement, deviating instructions in writing, acquisition schedule, title reports, appraisals, determinations of fair market value, project maps, engineering data, all printed forms for conveyancing or reporting negotiated transactions or recommendations according to AGENCY procedures.

(If any of the above are to be part of CONSULTANTS obligations then remove.)

B. The AGENCY shall furnish final decisions in writing on questions not covered by the above material.

C. The AGENCY shall review and accept (approved) or reject any work performed by the CONSULTANT on the project in ten (10) days or less from the date of receipt by the AGENCY.

D. The AGENCY shall provide the following for use by the CONSULTANT in the acquisition of rights-of-way for this project:

1. Office spaces.
2. Telephone.
3. Typing and duplicating equipment.
4. Stationery.
5. Postage.

(The above paragraph may not be included; if so, remove.)

V
COMPENSATION

A. The CONSULTANT shall be paid on a ___(day/mo)___ basis for work satisfactorily completed based upon the following specified rates and such rates will be applicable throughout the life of the Agreement.

Project Manager	$_____ per (hr/day/month)
Negotiator (acquisition agent)	$_____ per (hr/day/month)
Appraiser	$_____ per parcel
(eliminate appraiser if not part of agreement)	
Relocation Agent	$_____ per (hr/day/month)
Meals and Lodging	Actual expense not to exceed State of Washington's per diem expense.
Travel	As authorized by Agency in writing.
Mileage (automobile)	$_____ per mile for on job costs
Miscellaneous	Actual expense, such as parking, ferry charges, photo copy costs, long distance phone costs, etc.

B. The CONSULTANT shall on or before the _____ day of each month, invoice the AGENCY for services rendered during the previous month identifying the project, parcels worked on, and days worked. CONSULTANT will also provide a written progress report on this project on a monthly basis.

C. The total reimbursement of compensation and expenses for services under provisions of this Agreement is estimated to be: $_____. The amount shall not be exceeded without execution of an amendment to this Agreement.

Reimbursement is based on the following:

Photographs	$_____
Research Property Owners Address	$_____
Prepare and Mail Preacquisition Letters	$_____
Prepare and Deliver Formal Offer Letters	$_____
Prepare Legal Descriptions	$_____
Negotiation Labor	$_____
Appraisal	$_____
Relocation Services	$_____
Processing	$_____
Prepare Conveyance Documents	$_____
Misc. Meetings and Progress Reports	$_____
TOTAL	$_____

(Portions not needed should be eliminated.)

VI
TIME OF BEGINNING AND COMPLETION

A. The CONSULTANT shall not begin work under the terms of this Agreement until authorized in writing by the AGENCY. The time required, in calendar days, for completion of all work under this Agreement shall be _____ days following written authorization to begin.

   Established completion time shall not be extended because of any unwarranted delays attributable to the CONSULTANT, but may be extended by the AGENCY or because of unavoidable delays caused by an act of God or governmental actions or other conditions beyond the control of the CONSULTANT.

B. Upon completion of this Agreement all documents and records shall be turned over to the AGENCY.

VII
AMENDMENTS AND REVISIONS

Should the AGENCY make changes within the scope of this Agreement by giving notice to CONSULTANT and subsequently confirming such changes in writing. If such changes affect the cost of or the time required for performance of this Agreement, an appropriate adjustment shall be made. No change by CONSULTANT shall be recognized without written approval by the AGENCY. Nothing in this article shall excuse CONSULTANT from proceeding with performance of the Agreement as changed hereunder. All changes shall be submitted as an amendment to the basic Agreement and approved by the State of Washington, Department of Transportation, before the work is undertaken in order to become eligible for federal participation.

VIII
ASSIGNMENT OF AGREEMENT

CONSULTANT shall not assign this Agreement in whole or in part, nor shall CONSULTANT subcontract any of the work to be performed herein without the prior written consent of the AGENCY.

IX
TERMINATION OF CONTRACT

A. Agency may terminate this contract by notifying CONSULTANT _____ days in advance of termination in writing by Certified Mail of its intentions so to do at any time and for any reason whatsoever. In the event of such termination, AGENCY shall be obligated to reimburse CONSULTANT for services performed and expenses incurred to date of termination at the rates set forth under Articles _____ and _____ herein, less prior interim payments, if any. Upon payment of such sums, AGENCY shall be discharged from all liability to the CONSULTANT hereunder and this Agreement shall be considered terminated unless extended in writing by mutual agreement between the parties hereto.

B. Upon termination of contract under Paragraph A above, all documents, records, and file materials shall be turned over to the AGENCY by the CONSULTANT.

C. All services to be rendered under this contract shall be subject to direction and approval of the AGENCY.

X
EMPLOYMENT

The CONSULTANT warrants that he had not employed or retained any company or person, other than a bona fide employe working solely for the CONSULTANT, to solicit or secure this Agreement and that he has not paid or agreed to pay any company or person, other than a bona fide employee working solely for the CONSULTANT, any fee, commission, percentage, brokerage fee, gifts, or any other consideration, contingent upon or resulting from the award or making of this contract. For breach or violation of this warranty, the AGENCY shall have the right to annul this Agreement without liability or, in its discretion, to deduct from the Agreement price or consideration or otherwise recover, the full amount of such fee, commission, percentage, brokerage fee, gift, or contingent fee.

Any and all employees of the CONSULTANT, while engaged in the performance of any work or services required by the CONSULTANT under this Agreement, shall be considered employees of the CONSULTANT only and not of the AGENCY and any and all claims that may or might arise under the Workman's Compensation Act on behalf of said employees, while so engaged and any and all claims made by a third party as a consequence of any negligent act or omission on the part of the CONSULTANT's employees, while so engaged on any of the work or services provided to be rendered herein, shall be the sole obligation and responsibility of the CONSULTANT.

The CONSULTANT shall not engage, on a full or part-time basis, or other basis, during the period of the Agreement, any professional or technical personnel who are, or have been at any time during the period of this Agreement, in the employ of the FHWA, state, or AGENCY, except regularly retired employees, without written consent of the public employer of such person.

If during the time period of this Agreement, the CONSULTANT finds it necessary to increase his professional, technical, or clerical staff as a result of this work, he will actively solicit minorities through his advertisement and interview process.

During the performance of this Agreement, the CONSULTANT, for itself, its assignees, and successors in interest, hereinafter referred to as the CONSULTANT, agrees as follows:

A. COMPLIANCE WITH REGULATIONS: The CONSULTANT will comply with the regulation of the Department of Transportation relative to nondiscrimination in federally-assisted programs of the Department of Transportation Title 49, Code of Federal Regulations, Part 21, hereinafter referred to as the Regulations, which are herein incorporated by reference and made a part of this Agreement.

B. NONDISCRIMINATION: The CONSULTANT, with regard to the work performed by it, will not discriminate on the grounds of race, religion, color, national origin, or sex in the selection and retention of subcontractors, including procurements of materials and leases of equipment. The CONSULTANT will not participate either directly or indirectly in the discrimination prohibited by Section 21.5 of the Regulations, including employment practices, when the contract covers a program set forth in Appendix A-11 of the Regulations.

C. SOLICITATION FOR SUBCONTRACTORS, INCLUDING PROCUREMENTS OF MATERIALS AND EQUIPMENT: In all solicitations, either by competitive bidding or negotiation made by the CONSULTANT for work to be performed under a subcontract, including procurements of materials or equipment, each potential subcontractor or supplier shall be notified by the CONSULTANT of the CONSULTANT obligations under this contract and the Regulations relative to nondiscrimination on the ground of race, religion, color, national origin, or sex.

D. INFORMATION AND REPORTS: The CONSULTANT will provide all information and reports required by the Regulations, or orders and instruction issued pursuant thereto and will permit access to its books, records, accounts, other sources of information, and its facilities as may be determined by the AGENCY or the FHWA to be pertinent to ascertain compliance with such Regulations, orders, and instructions. Where any information required by a CONSULTANT is in the exclusive possession of another who fails or refuses to furnish this information, the CONSULTANT shall so certify to the AGENCY or the FHWA as appropriate and shall set forth what efforts it has made to obtain the information.

E. SANCTIONS FOR NONCOMPLIANCE: In the event of the CONSULTANT's noncompliance with the discrimination provisions of this contract, the AGENCY shall impose such contract sanctions as it or the FHWA may determine to be appropriate, including, but not limited to:

   1. Withholding of payments to the CONSULTANT under the contract until the CONSULTANT complies and/or

   2. Cancellation, termination, or suspension of the contract in whole or part.

F. INCORPORATION OF PROVISIONS: The CONSULTANT will include the provisions of paragraph (A) through (F) in every subcontract, including procurements of materials and leases of equipment, unless exempt by the Regulations, orders, or instructions issued pursuant thereto. The CONSULTANT will take action with respect to any subcontract or procurement as the AGENCY or the FHWA may direct as a means of enforcing such provisions, including sanctions for noncompliance; PROVIDED, HOWEVER, that, in the event a CONSULTANT becomes involved in, or is threatened with, litigation with a subcontractor or supplier as a result of such direction, the CONSULTANT may request the AGENCY to enter into such litigation to protect the interests of the AGENCY and, in addition, the CONSULTANT may request the United States to enter into such litigation to protect the interests of the United States.

XI
INSURANCE

Prior to beginning work under this Agreement, CONSULTANT shall provide evidence that policies providing the following coverage and limits of insurance are in full force and effect.

1. GENERAL COMPREHENSIVE LIABILITY: With respect to liability for injuries to or death of persons and with respect to liability for destruction of or damage to property, the insurance coverage shall be $500,000 combined single limit and such coverage shall include the special provisions listed below:

   a. The AGENCY shall be as an additional insured and the coverage shall be applicable to and protect the AGENCY from liability arising from or relating to CONSULTANT's activities relating to this Agreement. Such insurance shall be primary and other insurance maintained or carried by the AGENCY shall be separate and distinct and shall not be contributing with the insurance listed hereunder.

   b. Such insurance shall include a "Cross Liability" or "Severability of Interest" clause.

   c. Such insurance shall not include explosion, collapse, or underground exclusions commonly referred to as the "XCU" hazards.

2. AUTOMOBILE COMPREHENSIVE LIABILITY: With respect to liability for injury to or death of persons and with respect to liability for destruction of or damage to property, the AGENCY shall be insured and the insurance coverage shall be $500,000 combined single limit. Such insurance shall be primary and other insurance maintained or carried by the AGENCY shall be separate and distinct and shall not be contributing with the insurance listed hereunder.

Failure of either or all of the insured to report a claim under such insurance shall not prejudice the rights of the AGENCY thereunder. The AGENCY will have no obligation for the payments of premiums because of its being an insured under such insurance. None of the policies issued pursuant to the requirements contained herein shall be cancelled, allowed to expire, or changed in any manner so as to affect the rights of the AGENCY thereunder until thirty (30) days after written notice of such intended cancellation, expiration, or change.

XII
WAGE AND HOURS LAW COMPLIANCE

CONSULTANT shall comply with all applicable provisions of the Fair Labor Standards Act and any other legislation affecting its employees and the rules and regulations issued thereunder insofar as applicable to its employees and shall at all times save the AGENCY free, clear, and harmless from all actions, claims, and expenses arising out of said Act and rules and regulations that are or may be promulgated in connection herewith.

XIII
SOCIAL SECURITY AND OTHER TAXES

CONSULTANT assumes full responsibility for the payment of all payroll taxes, use, sales, income, or other form of taxes, fee, licenses, excises, or payments required by any city, county, federal, or state legislation which are now or may during the term of the Agreement be enacted as to all persons employed by the CONSULTANT and as to all duties, activities, and requirements by the CONSULTANT in performance of the work on this project and under this contract and shall assume exclusive liability therefore, and meet all requirements thereunder pursuant to any rules or regulations.

XIV
DAMAGE CLAIMS

CONSULTANT shall indemnify and hold harmless the AGENCY from and against all claims for any and all damage, including but not limited to claims for damage to property or claims of misrepresentation in negotiations, due to negligence of the CONSULTANT or its employees including court costs and attorney's fees, if any.

XV
CONTENT AND UNDERSTANDING

This Agreement contains the complete and integrated understanding and agreement between the parties and supersedes any understanding, agreement, or negotiation whether oral or written not set forth herein or in written amendments hereto duly executed by both parties.

XVI
ATTORNEY'S FEES

If the AGENCY brings any action or suit relating to the enforcement of this Agreement or asking for any relief against CONSULTANT, declaratory or otherwise, arising out of this Agreement or if CONSULTANT brings any action or suit against the AGENCY, declaratory or otherwise, arising out of this Agreement, then the prevailing party in any of these events shall be paid it reasonable attorney's fees and costs and expenses expended or incurred in connection with any such suit or action.

XVII
INDEPENDENT CONTRACTOR

The CONSULTANT shall at all times be an independent contractor and not an employee of the AGENCY, and shall not be entitled to compensation or benefits of any kind except as specifically provided for herein.

XVIII
NOTICES

Any notice given by either party to the other hereunder shall be served, if delivered in person, to the office of the representative authorized and designated in writing to act for the respective party, or if deposited in the mail, properly stamped with the required postage and addressed to the office of such representative as indicated in this Agreement. Either party hereto shall have the right to change any representative or address it may have given to the other party by giving such other party due notice in writing of such change.

XIX
CONFLICT OF INTEREST

The CONSULTANT hereby affirms that he has no present or contemplated future personal interest in the property, which is the subject matter of this Agreement.

XX
GOVERNING LAW

This Agreement and the rights and obligations of the parties hereunder shall be governed by the laws of the State of Washington.

XXI
AUTHORIZED REPRESENTATIVE

In performing the services defined herein, CONSULTANT shall report to:

Telephone Number
CONSULTANT's Representative is:
Telephone Number

XXII
APPROVAL OF AGREEMENT

This Agreement shall become effective upon execution by the parties hereto.

_____	_____
(Consultant's Name)	(Agency)
By: _____	By: _____
(Title)	(Title)
APPROVED FOR USE:	APPROVED AS TO FORM:
_____	_____
Director of Real Estate Services Washington State Department of Transportation	(Agency Title)

INDEPENDENT ESTIMATE FOR CONSULTING SERVICES

DIRECT SALARY COST (Composite):

BREAKDOWN OF WORK	MAN-HOURS	AVERAGE RATE OF PAY	ESTIMATED COST
TOTALS →			$

OVERHEAD COST (Including payroll additives) _____ % $ _____

NET FEE $ _____

[T NON-SALARY COST:

A. TRAVEL AND PER DIEM $ _____
B. REPRODUCTION EXPENSES $ _____
C. COMPUTER EXPENSE $ _____
D. COMMUNICATION $ _____
E. SAMPLING AND TESTING $ _____
F. OUTSIDE CONSULTANTS $ _____
G. OTHER (Specify) $ _____

TOTAL $ _____

SUB-TOTAL $ _____

*CONTINGENCIES $ _____

GRAND TOTAL $ _____

AGENCY	FILE NO.	PROJECT NO.

PROJECT TITLE

ESTIMATE PREPARED BY (Signature)	DATE

** Use only on cost plus net fee type of payment.*

DOT FORM 140-012
10/82

Washington State Department of Transportation

STANDARD CONSULTANT AGREEMENT	CONSULTANT/ADDRESS/TELEPHONE
AGREEMENT NUMBER FEDERAL AID NO.	
	PROJECT TITLE AND WORK DESCRIPTION

AGREEMENT TYPE (CHECK ONE)

☐ **LUMP SUM**
LUMP SUM AMOUNT $_____

☐ **COST PLUS FIXED FEE**
OVERHEAD PROGRESS PAYMENT RATE _____%

OVERHEAD COST METHOD

☐ ACTUAL COST NOT TO EXCEED _____%

☐ FIXED RATE _____%

FIXED FEE $_____

☐ **SPECIFIC RATES OF PAY**
☐ NEGOTIATED HOURLY RATE
☐ PROVISIONAL HOURLY RATE

☐ **COST PER UNIT OF WORK**

DBE PARTICIPATION	
☐ YES ☐ NO _____%	
WBE PARTICIPATION	
☐ YES ☐ NO _____%	
FEDERAL ID NO. OR S.S. NO.	Do you require a 1099 for IRS? ☐ YES ☐ NO
COMPLETION DATE	MAXIMUM AMOUNT PAYABLE $_____

THIS AGREEMENT, made and entered into this _____ day of _____, _____, between the Local Agency of _____, Washington, hereinafter called the "AGENCY" , and the above organization hereinafter called the "CONSULTANT".

WITNESSETH THAT:

WHEREAS, the AGENCY desires to accomplish the above referenced project, and

WHEREAS, the AGENCY does not have sufficient staff to meet the required commitment and therefore deems it advisable and desirable to engage the assistance of a CONSULTANT to provide the necessary services for the PROJECT; and

WHEREAS, the CONSULTANT represents that he/she is in compliance with the Washington State Statutes relating to professional registration, if applicable, and has signified a willingness to furnish Consulting services to the AGENCY,

NOW THEREFORE, in consideration of the terms, conditions, covenants and performance contained herein, or attached and incorporated and made a part hereof, the parties hereto agree as follows:

I
GENERAL DESCRIPTION OF WORK

The work under this AGREEMENT shall consist of the above described work and services as herein defined and necessary to accomplish the completed work for this PROJECT. The CONSULTANT shall furnish all services, labor and related equipment necessary to conduct and complete the work as designated elsewhere in this AGREEMENT.

II
SCOPE OF WORK

The Scope of Work and project level of effort for this project is detailed in Exhibit "B" attached hereto, and by this reference made a part of this AGREEMENT.

III
GENERAL REQUIREMENTS

All aspects of coordination of the work of this AGREEMENT, with outside agencies, groups or individuals shall receive advance approval by the AGENCY. Necessary contacts and meetings with agencies, groups or individuals shall be coordinated through the AGENCY.

The CONSULTANT shall attend coordination, progress and presentation meetings with the AGENCY or such Federal, Community, State, City or County officials, groups or individuals as may be requested by the AGENCY. The AGENCY will provide the CONSULTANT sufficient notice prior to meetings requiring CONSULTANT participation. The minimum number of hours or days notice – required shall be agreed to between the AGENCY and the CONSULTANT and shown in Exhibit "B" attached hereto and made part of this AGREEMENT. The CONSULTANT shall prepare a monthly progress report, in a form approved by the AGENCY, that will outline in written and graphical form the various phases and the order of performance of the work in sufficient detail so that the progress of the work can easily be evaluated. Goals for Disadvantaged Business Enterprises (DBE) and Women Owned Business Enterprises (WBE) if required shall be shown in the heading of this AGREEMENT.

All reports, PS&E materials, and other data, furnished to the CONSULTANT by the AGENCY shall be returned. All designs, drawings, specifications, documents, and other work products prepared by the CONSULTANT prior to completion or termination of this AGREEMENT are instruments of service for this PROJECT and are property of the AGENCY. Reuse by the AGENCY or by others acting through or on behalf of the AGENCY of any such instruments of service, not occurring as a part of this PROJECT, shall be without liability or legal exposure to the CONSULTANT.

IV
TIME FOR BEGINNING AND COMPLETION

The CONSULTANT shall not begin any work under the terms of this AGREEMENT until authorized in writing by the AGENCY. All work under this AGREEMENT shall be completed by the date shown in the heading of this AGREEMENT under completion date.

The established completion time shall not be extended because of any delays attributable to the CONSULTANT, but may be extended by the AGENCY, in the event of a delay attributable to the AGENCY, or because of unavoidable delays caused by an act of GOD or governmental actions or other conditions beyond the control of the CONSULTANT. A prior supplemental agreement issued by the AGENCY is required to extend the established completion time.

V
PAYMENT

The CONSULTANT shall be paid by the AGENCY for completed work and services rendered under this AGREEMENT as provided in Exhibit "C" attached hereto, and by this reference made part of this AGREEMENT. Such payment shall be full compensation for work performed or services rendered and for all labor, materials, supplies, equipment, and incidentals necessary to complete the work specified in Section II, "Scope of Work". The CONSULTANT shall conform with all applicable portions of 48 CFR 31.

VI
SUBCONTRACTING

The AGENCY permits subcontracts for those items of work as shown in Exhibit G to this Agreement.

Compensation for this subconsultant work shall be based on the cost factors shown on Exhibit G, attached hereto and by this reference made a part of this AGREEMENT.

The work of the subconsultant shall not exceed its maximum amount payable unless a prior written approval has been issued by the AGENCY.

All reimbursable direct labor, overhead, direct non-salary costs and fixed fee costs for the subconsultant shall be substantiated in the same manner as outlined in Section V. All subcontracts exceeding $10,000 in cost shall contain all applicable provisions of this AGREEMENT.

The CONSULTANT shall not subcontract for the performance of any work under this AGREEMENT without prior written permission of the AGENCY. No permission for subcontracting shall create, between the AGENCY and subcontractor, any contract or any other relationship.

VII
EMPLOYMENT

The CONSULTANT warrants that he/she has not employed or retained any company or person, other than a bona fide employee working solely for the CONSULTANT, to solicit or secure this contract, and that it has not paid or agreed to pay any company or person, other than a bona fide employee working solely for the CONSULTANT, any fee, commission, percentage, brokerage fee, gift, or any other consideration, contingent upon or resulting from the award or making of this contract. For breach or violation of this warrant, the AGENCY shall have the right to annul this AGREEMENT without liability, or in its discretion, to deduct from the AGREEMENT price or consideration or otherwise recover the full amount of such fee, commission, percentage, brokerage fee, gift, or contingent fee.

Any and all employees of the CONSULTANT or other persons while engaged in the performance of any work or services required of the CONSULTANT under this AGREEMENT, shall be considered employees of the CONSULTANT only and not of the AGENCY, and any and all claims that may or might arise under any Workmen's compensation Act on behalf of said employees or other persons while so engaged, and any and all claims made by a third party as a consequence of any act or omission on the part of the CONSULTANT's employees or other persons while so engaged on any of the work or services provided to be rendered herein, shall be the sole obligation and responsibility of the CONSULTANT.

The CONSULTANT shall not engage, on a full or part time basis, or other basis, during the period of the contract, any professional or technical personnel who are, or have been, at any time during the period of the contract, in the employ of the United States Department of Transportation, the STATE, or the AGENCY, except regularly retired employees, without written consent of the public employer of such person.

VIII
NONDISCRIMINATION

The CONSULTANT agrees not to discriminate against any client, employee or applicant for employment or for services because of race, creed, color, national origin, marital status, sex, age or handicap except for a bona fide occupational qualification with regard to, but not limited to the following: employment upgrading, demotion or transfer, recruitment or any recruitment advertising,a layoff or terminations, rates of pay or other forms of compensation, selection for training, rendition of services. The CONSULTANT understands and agrees that if it violates this provision, this AGREEMENT may be terminated by the AGENCY and further that the CONSULTANT shall be barred from performing any services for the AGENCY now or in the future unless a showing is made satisfactory to the AGENCY that discriminatory practices have terminated and that recurrence of such action is unlikely.

During the performance of this AGREEMENT, the CONSULTANT, for itself, its assignees and successors in interest agrees as follows:

A. COMPLIANCE WITH REGULATIONS: The CONSULTANT shall comply with the Regulations relative to nondiscrimination in the same manner as in Federal-assisted programs of the Department of Transportation, Title 49, Code of

Federal Regulations, Part 21, as they may be amended from time to time, (hereinafter referred to as the Regulations), which are herein incorporated by reference and made a part of this AGREEMENT. The consultant shall comply with the American Disabilities Act of 1992, as amended.

B. NONDISCRIMINATION: The CONSULTANT, with regard to the work performed by it during the AGREEMENT, shall not discriminate on the grounds of race, creed color, sex, age, marital status, national origin or handicap except for a bona fide occupational qualification in the selection and retention of subconsultants, including procurements of materials and leases of equipment. The CONSULTANT shall not participate either directly or indirectly in the discrimination prohibited by Section 21.5 of the Regulations, including employment practices when the contract covers a program set forth in Appendix II of the Regulations.

C. SOLICITATIONS FOR SUBCONSULTANTS, INCLUDING PROCUREMENTS OF MATERIALS AND EQUIPMENT: In all solicitations either by competitive bidding or negotiation made by the CONSULTANT for work to be performed under a subcontract, including procurements of materials or leases of equipment, each potential subconsultant or supplier shall be notified by the CONSULTANT of the CONSULTANT's obligations under this AGREEMENT and the Regulations relative to nondiscrimination on the grounds of race, creed, color, sex, age, marital status, national origin and handicap.

D. INFORMATION AND REPORTS: The CONSULTANT shall provide all information and reports required by the Regulations, or directives issued pursuant thereto, and shall permit access to its books, records, accounts, other sources of information, and its facilities as may be determined by the AGENCY to be pertinent to ascertain compliance with such Regulations or directives. Where any information required of the CONSULTANT is in the exclusive possession of another who fails or refuses to furnish this information the CONSULTANT shall so certify to the AGENCY, or the United States Department of Transportation as appropriate, and shall set forth what efforts it has made to obtain the information.

E. SANCTIONS FOR NONCOMPLIANCE: In the event of the CONSULTANT's noncompliance with the nondiscrimination provisions of this AGREEMENT, the AGENCY shall impose such sanctions as it or the Federal Highway Administration may determine to be appropriate, including, but not limited to:

1. Withholding of payments to the CONSULTANT under the AGREEMENT until the CONSULTANT complies, and/or
2. Cancellation, termination or suspension of the AGREEMENT, in whole or in part.

F. INCORPORATION OF PROVISIONS: The CONSULTANT shall include the provisions of paragraphs (A) through (G) in every subcontract, including procurements of materials and leases of equipment, unless exempt by the Regulations or directives issued pursuant thereto. The CONSULTANT shall take such action with respect to any subconsultant or procurement as the AGENCY or the Federal Highway Administration may direct as a means of enforcing such provisions including sanctions for noncompliance; provided, however, that, in the event a CONSULTANT becomes involved in, or is threatened with, litigation with a subconsultant or supplier as a result of such direction, the CONSULTANT may request the AGENCY to enter into such litigation to protect the interests of the AGENCY, and in addition, the CONSULTANT may request the United States to enter into such litigation to protect the interests of the United States.

G. UNFAIR EMPLOYMENT PRACTICES: The CONSULTANT shall comply with RCW 49.60.180 and Executive Order number E.O. 77-13 of the Governor of the State of Washington which prohibits unfair employment practices.

IX
TERMINATION OF AGREEMENT

The right is reserved by the AGENCY to terminate this AGREEMENT at any time upon ten days written notice to the CONSULTANT.

In the event this AGREEMENT is terminated by the AGENCY other than for default on the part of the CONSULTANT, a final payment shall be made to the CONSULTANT as shown in Exhibit F for the type of AGREEMENT used.

No payment shall be made for any work completed after ten days following receipt by the CONSULTANT of the Notice to terminate. If the accumulated payment made to the CONSULTANT prior to Notice of Termination exceeds the total amount that would be due computed as set forth herein above, then no final payment shall be due and the CONSULTANT shall immediately reimburse the AGENCY for any excess paid.

If the services of the CONSULTANT are terminated by the AGENCY for default on the part of the CONSULTANT, the above formula for payment shall not apply. In such an event, the amount to be paid shall be determined by the AGENCY with consideration given to the actual costs incurred by the CONSULTANT in performing the work to the date of termination, the amount of work originally required which was satisfactorily completed to date of termination, whether that work is in a form or a type which is usable to the AGENCY at the time of termination; the cost to the AGENCY of employing another firm to complete the work required and the time which maybe required to do so, and other factors which affect the value to the AGENCY of the work performed at the time of termination. Under no circumstances shall payment made under this subsection exceed the amount which would have been made using the formula set forth in the previous paragraph.

If it is determined for any reason that the CONSULTANT was not in default or that the CONSULTANT's failure to perform is without it or it's employee's fault or negligence, the termination shall be deemed to be a termination for the convenience of the AGENCY in accordance with the provision of this AGREEMENT.

In the event of the death of any member, partner or officer of the CONSULTANT or any of its supervisory personnel assigned to the project, or, dissolution of the partnership, termination of the corporation, or disaffiliation of the principally involved employee, the surviving members of the CONSULTANT hereby agree to complete the work under the terms of this AGREEMENT, if requested to do so by the AGENCY. The subsection shall not be a bar to renegotiation of the AGREEMENT between the surviving members of the CONSULTANT and the AGENCY, if the AGENCY so chooses.

In the event of the death of any of the parties listed in the previous paragraph, should the surviving members of the CONSULTANT, with the AGENCY's concurrence, desire to terminate this AGREEMENT, payment shall be made as set forth in the second paragraph of this section.

Payment for any part of the work by the AGENCY shall not constitute a waiver by the AGENCY of any remedies of any type it may have against the CONSULTANT for any breach of this AGREEMENT by the CONSULTANT, or for failure of the CONSULTANT to perform work required of it by the AGENCY. Forbearance of any rights under the AGREEMENT will not constitute waiver of entitlement to exercise those rights with respect to any future act or omission by the CONSULTANT.

X
CHANGES OF WORK

The CONSULTANT shall make such changes and revisions in the complete work of this AGREEMENT as necessary to correct errors appearing therein, when required to do so by the AGENCY, without additional compensation thereof. Should the AGENCY find it desirable for its own purposes to have previously satisfactorily completed work or parts thereof changed or revised, the CONSULTANT shall make such revisions as directed by the AGENCY. This work shall be considered as Extra Work and will be paid for as herein provided under Section XIV.

XI
DISPUTES

Any dispute concerning questions of fact in connection with the work not disposed of by AGREEMENT between the CONSULTANT and the AGENCY shall be referred for determination to the Director of Public Works or AGENCY Engineer, whose decision in the matter shall be final and binding on the parties of this AGREEMENT, provided however, that if an action is brought challenging the Director of Public Works or AGENCY Engineer's decision, that decision shall be subject to de novo judicial review.

XII
VENUE, APPLICABLE LAW AND PERSONAL JURISDICTION

In the event that either party deems it necessary to institute legal action or proceedings to enforce any right or obligation under this AGREEMENT, the parties hereto agree that any such action shall be initiated in the Superior court of the State of Washington, situated in the county the AGENCY is located in. The parties hereto agree that all questions shall be resolved by application of Washington law and that the parties to such action shall have the right of appeal from such decisions of the Superior court in accordance with the laws of the State of Washington. The CONSULTANT hereby consents to the personal jurisdiction of the Superior court of the State of Washington, situated in the county in which the AGENCY is located in.

XIII
LEGAL RELATIONS AND INSURANCE

The CONSULTANT shall comply with all Federal, State, and local laws and ordinances applicable to the work to be done under this AGREEMENT. This AGREEMENT shall be interpreted and construed in accord with the laws of Washington.

The CONSULTANT shall indemnify and hold the AGENCY and the STATE, and their officers and employees harmless from and shall process and defend at its own expense all claims, demands, or suits at law or equity arising in whole or in part from the CONSULTANT's negligence or breach of any of its obligations under this AGREEMENT; provided that nothing herein shall require a CONSULTANT to indemnify the AGENCY and the STATE against and hold harmless the AGENCY and the STATE from claims, demands or suits based solely upon the conduct of the AGENCY and the STATE, their agents, officers and employees and provided further that if the claims or suits are caused by or result from the concurrent negligence of (a) the CONSULTANT's agents or employees and (b) the AGENCY and the STATE, their agents, officers and employees, this indemnity provision with respect to (1) claims or suits based upon such negligence, (2) the costs to the AGENCY and the STATE of defending such claims and suits, etc. shall be valid and enforceable only to the extent of the CONSULTANT's negligence or the negligence of the CONSULTANT's agents or employees.

The CONSULTANT's relation to the AGENCY shall be at all times as an independent contractor.

The CONSULTANT specifically assumes potential liability for actions brought by the CONSULTANT's own employees against the AGENCY and, solely for the purpose of this indemnification and defense, the CONSULTANT specifically waives any immunity under the state industrial insurance law, Title 51 RCW. The CONSULTANT recognizes that this waiver was specifically entered into pursuant to the provisions of RCW 4.24.115 and was the subject of mutual negotiation.

Unless otherwise specified in the AGREEMENT, the AGENCY shall be responsible for administration of construction contracts, if any, on the project. Subject to the processing of an acceptable, supplemental agreement, the CONSULTANT shall provide on-call assistance to the AGENCY during contract administration. By providing such assistance, the CONSULTANT shall assume no responsibility for: proper construction techniques, job site safety, or any construction contractor's failure to perform its work in accordance with the contract documents.

The CONSULTANT shall obtain and keep in force during the terms of the AGREEMENT, or as otherwise required, the following insurance with companies or through sources approved by the State Insurance Commissioner pursuant to RCW 48.

Insurance Coverage

A. Worker's compensation and employer's liability insurance as required by the STATE.

B. General commercial liability insurance in an amount not less than a single limit of one million and 00/100 Dollars ($1,000,000.00) for bodily injury, including death and property damage per occurrence.

Excepting the Worker's Compensation insurance and any professional liability insurance secured by the CONSULTANT, the AGENCY will be named on all certificates of insurance as an additional insured. The CONSULTANT shall furnish the AGENCY with verification of insurance and endorsements required by this AGREEMENT. The AGENCY reserves the right to require complete, certified copies of all required insurance policies at any time.

All insurance shall be obtained from an insurance company authorized to do business in the State of Washington. The CONSULTANT shall submit a verification of insurance as outlined above within 14 days of the execution of this AGREEMENT to the AGENCY.

No cancellation of the foregoing policies shall be effective without thirty (30) days prior notice to the AGENCY.

The CONSULTANT's professional liability to the AGENCY shall be limited to the amount payable under this AGREEMENT or one million dollars, whichever is the greater unless modified by Exhibit H. In no case shall the CONSULTANT's professional liability to third parties be limited in any way.

The AGENCY will pay no progress payments under Section V until the CONSULTANT has fully complied with this section. This remedy is not exclusive; and the AGENCY and the STATE may take such other action as is available to them under other provisions of this AGREEMENT, or otherwise in law.

XIV
EXTRA WORK

A. The AGENCY may at any time, by written order, make changes within the general scope of the AGREEMENT in the services to be performed.

B. If any such change causes an increase or decrease in the estimated cost of, or the time required for, performance of any part of the work under this AGREEMENT, whether or not changed by the order, or otherwise affects any other terms and conditions of the AGREEMENT, the AGENCY shall make an equitable adjustment in the (1) maximum amount payable; (2) delivery or completion schedule, or both; and (3) other affected terms and shall modify the AGREEMENT accordingly.

C. The CONSULTANT must submit its "request for equitable adjustment" (hereafter referred to as claim) under this clause within 30 days from the date of receipt of the written order. However, if the AGENCY decides that the facts justify it, the AGENCY may receive and act upon a claim submitted before final payment of the AGREEMENT.

D. Failure to agree to any adjustment shall be a dispute under the Disputes clause. However nothing in this clause shall excuse the CONSULTANT from proceeding with the AGREEMENT as changed.

E. Notwithstanding the terms and condition of paragraphs (a) and (b) above, the maximum amount payable for this AGREEMENT, shall not be increased or considered to be increased except by specific written supplement to this AGREEMENT.

XV
ENDORSEMENT OF PLANS

The CONSULTANT shall place his endorsement on all plans, estimates or any other engineering data furnished by him.

XVI
FEDERAL AND STATE REVIEW

The Federal Highway Administration and the Washington State Department of Transportation shall have the right to participate in the review or examination of the work in progress.

XVII
CERTIFICATION OF THE CONSULTANT AND THE AGENCY

Attached hereto as Exhibit "A-1", are the Certifications of the Consultant and the Agency, Exhibit "A-2" Certification regarding debarment, suspension and other responsibility matters - primary covered transactions, Exhibit "A-3" Certification regarding the restrictions of the use of Federal funds for lobbying, and Exhibit "A-4" Certificate of Current Cost or Pricing Data. Exhibits "A-3" and "A-4" are only required in Agreements over $100,000.

XVIII
COMPLETE AGREEMENT

This document and referenced attachments contains all covenants, stipulations and provisions agreed upon by the parties. No agent, or representative of either party has authority to make, and the parties shall not be bound by or be liable for, any statement, representation, promise or agreement not set forth herein. No changes, amendments, or modifications of the terms hereof shall be valid unless reduced to writing and signed by the parties as an amendment to this AGREEMENT.

XIX
EXECUTION AND ACCEPTANCE

This AGREEMENT may be simultaneously executed in several counterparts, each of which shall be deemed to be an original having identical legal effect. The CONSULTANT does hereby ratify and adopt all statements, representations, warranties, covenants, and agreements contained in the proposal, and the supporting materials submitted by the CONSULTANT, and does hereby accept the AGREEMENT and agrees to all of the terms and conditions thereof.

In witness whereof, the parties hereto have executed this AGREEMENT as of the day and year first above written.

By _____ By _____

Consultant _____ Agency _____
Principal

EXHIBIT A-1

CERTIFICATION OF CONSULTANT

Project No. _____
Local Agency _____

I hereby certify that I am _____ and duly authorized representative of the firm of _____ whose address is _____ and that neither I nor the above firm I here represent has:

(a) Employed or retained for a commission, percentage, brokerage, contingent fee or other consideration, any firm or person (other than a bona fide employee working solely for me or the above CONSULTANT) to solicit or secure this contract.

(b) Agreed, as an express or implied condition for obtaining this contract, to employ or retain the services of any firm or person in connection with carrying out the contract.

(c) Paid, or agreed to pay, to any firm, organization or person (other than a bona fide employee working solely for me or the above CONSULTANT) any fee, contribution, donation or consideration of any kind for, or in connection with procuring or carrying out the contract; except as here expressly stated (if any):

I further certify that the firm I hereby represent is authorized to do business in the State of Washington and that the firm is in full compliance with the requirements of the Board of Professional Registration.

I acknowledge that this certificate is to be available to the State Department of Transportation and the Federal Highway Administration, U.S. Department of Transportation, in connection with this contract involving participation of Federal aid funds and is subject to applicable State and Federal laws, both criminal and civil.

_____ _____
Date Signature

CERTIFICATION OF AGENCY OFFICIAL

I hereby certify that I am the AGENCY Official of the Local Agency of _____ Washington and that the above consulting firm or his representative has not been required, directly or indirectly as an express or implied condition in connection with obtaining or carrying out this contract to:

(a) Employ or retain, or agree to employ or retain, any firm or person, or

(b) Pay or agree to pay to any firm, person or organization, any fee, contribution, donation or consideration of any kind, except as here expressly stated (if any).

I acknowledged that this certificate is to be available to the Federal Highway Administration, U.S. Department of Transportation, in connection with this contract involving participation of Federal aid highway funds and is subject to applicable State and Federal laws, both criminal and civil.

_____ _____
Date Signature

EXHIBIT A-2

CERTIFICATION REGARDING DEBARMENT, SUSPENSION, AND OTHER RESPONSIBILITY MATTERS-PRIMARY COVERED TRANSACTIONS

1. The prospective primary participant certifies to the best of its knowledge and belief, that it and its principals:
   (a) Are not presently debarred, suspended, proposed for debarment, declared ineligible, or voluntarily excluded from covered transactions by any federal department or agency;
   (b) Have not within a three-year period preceding this proposal been convicted of or had a civil judgment rendered against them for commission or fraud or a criminal offense in connection with obtaining, attempting to obtain, or performing a public (federal, state, or local) transaction or contract under a public transaction; violation of federal or state antitrust statues or commission of embezzlement, theft, forgery, bribery, falsification or destruction of records, making false statements, or receiving stolen property;
   (c) Are not presently indicted for or otherwise criminally or civilly charged by a governmental entity (federal, state, or local) with commission of any of the offenses enumerated in paragraph 1.b. of this certification; and
   (d) Have not within a three-year period preceding this application/proposal had one or more public transactions (federal, state, or local) terminated for cause or default.
2. Where the prospective primary participant is unable to certify to any of the statements in this certification, such prospective participant shall attach an explanation to this proposal.

Consultant (Firm): _____

_____ (Date)

_____ President or Authorized Official of Consultant (Signature)

EXHIBIT A-3

CERTIFICATION REGARDING THE RESTRICTIONS OF THE USE OF FEDERAL FUNDS FOR LOBBYING

The prospective participant certifies, by signing and submitting this bid or proposal, to the best of his or her knowledge and belief, that:

1. No federal appropriated funds have been paid or will be paid, by or on behalf of the undersigned, to any person for influencing or attempting to influence an officer or employee of any federal agency, a member of Congress, an officer or employee of Congress, or an employee of a member of Congress in connection with the awarding of any federal contract, the making of any federal grant, the making of any federal loan, the entering into of any cooperative agreement, and the extension, continuation, renewal, amendment, or modification of any federal contract, grant, loan, or cooperative agreement.
2. If any funds other than federal appropriated funds have been paid or will be paid to any person for influencing or attempting to influence an officer or employee of any federal agency, a member of Congress, an officer or employee of Congress, or an employee of a member of Congress in connection with this federal contract, grant, loan, or cooperative agreement, the undersigned shall complete and submit Standard Form-LLL, "Disclosure Form to Report Lobbying," in accordance with its instructions.

This certification is a material representation of fact upon which reliance was placed when this transaction was made or entered into. Submission of this certification is a prerequisite for making or entering into this transaction imposed by Section 1352, Title 31, U.S. Code. Any person who fails to file the required certification shall be subject to a civil penalty of not less than $10,000 and not more than $100,000 for each such failure.

The prospective participant also agrees by submitting his or her bid or proposal that he or she shall require that the language of this certification be included in all lower tier subcontracts which exceed $100,000 and that all such subrecipients shall certify and disclose accordingly.

Consultant (Firm): _____

_____ (Date)

_____ President or Authorized Official of Consultant (Signature)

EXHIBIT A-4

CERTIFICATE OF CURRENT COST OR PRICING DATA

This is to certify that, to the best of my knowledge and belief, the cost or pricing data (as defined in section 15.801 of the Federal Acquisition Regulation (FAR) and required under FAR subsection 15.804-2) submitted, either actually or by specific identification in writing, to the contracting officer or to the contracting officer's representative in support of _____* are accurate, complete, and current as of _____**. This certification includes the cost or pricing data supporting any advance agreements and forward pricing rate agreements between the offeror and the Government that are part of the proposal.

Firm _____

Name _____

Title _____

Date of Execution*** _____

* Identify the proposal, quotation, request for price adjustment, or other submission involved, giving the appropriate identifying number (e.g., RFP No.).

** Insert the day, month, and year when price negotiations were concluded and price agreement was reached.

*** Insert the day, month, and year of signing, which should be as close as practicable to the date when the price negotiations were concluded and the contract price was agreed to.

EXHIBIT B-1

SCOPE OF WORK

Project No. _____

DOCUMENTS TO BE FURNISHED BY THE CONSULTANT

EXHIBIT B-2

SCOPE OF WORK
(TASK ORDER AGREEMENT)

Each item of work under this AGREEMENT will be provided by task assignment. Each assignment will be individually negotiated with the CONSULTANT. The amount established for each assignment will be the maximum amount payable for that assignment unless modified in writing by the AGENCY. The AGENCY is not obligated to assign any specific number of tasks to the CONSULTANT, and the AGENCY'S and CONSULTANT'S obligations hereunder are limited to tasks assigned in writing. Task assignments may include, but are not limited to, the following types of work:

A. _____

B. _____

C. _____

D. _____

E. _____

F. _____

Task assignments made by the AGENCY shall be issued in writing by a Formal Task Assignment Document similar in format to page 2 of this exhibit.

An assignment shall become effective when a formal Task Assignment Document is signed by the CONSULTANT and the AGENCY, except that emergency actions requiring a 24-hour or less response can be handled by an oral authorization. Such oral authorization shall be followed up with a Formal Task Assignment Document within four working days, and any billing rates agreed to orally (for individuals, subconsultants, or organizations whose rates were not previously established in this AGREEMENT) shall be provisional and subject to final negotiation and acceptance by the AGENCY.

FORMAL TASK ASSIGNMENT DOCUMENT
TASK NUMBER _____

The general provisions and clauses of Agreement _____ shall be in full force and effect for this Task Assignment.

Location of Project:

Project Title:

Maximum Amount Payable Per Task Assignment:

Completion Date:

Description of Work:
(Note attachments and give brief description)

Agency Project Manager Signature: _____ Date: _____

Oral Authorization Date: _____ See Letter Dated: _____

Consultant Signature: _____ Date: _____

Agency Approving Authority: _____ Date: _____

EXHIBIT C-1

PAYMENT
(LUMP SUM)

A. **Lump Sum Agreement**

Payment for all consulting services for this project shall be on the basis of a lump sum amount as shown in the heading of this AGREEMENT.

1. Management Reserve Fund

   The AGENCY may desire to establish a Management Reserve Fund to provide the Agreement Administrator the flexibility of authorizing additional funds to the AGREEMENT for allowable unforeseen costs, or reimbursing the CONSULTANT for additional work beyond that already defined in this AGREEMENT. Such authorization(s) shall be in writing and shall not exceed the lesser of $50,000 or 10% of the Lump Sum Amount as shown in the heading of this Agreement. The amount included for the Management Reserve Fund is shown in the heading of the AGREEMENT. This fund may be replenished in a subsequent supplemental agreement. Any changes requiring additional costs in excess of the "Management Reserve Fund" shall be made in accordance with Section XIV, "Extra Work."

2. Maximum Total Amount Payable

   The Maximum Total Amount Payable, by the AGENCY to the CONSULTANT under this AGREEMENT, shall not exceed the amount shown in the heading of this AGREEMENT. The maximum total amount payable is comprised of the Lump Sum Amount and the Management Reserve Fund. The Maximum Total Amount Payable does not include payment for extra work as stipulated in Section XIV, "Extra Work."

B. **Monthly Progress Payments**

Partial payments may be made upon request of the CONSULTANT to cover the percentage of work completed, and are not to be more frequent than one (1) per month. To provide a means of verifying the invoiced salary costs for the Consultant's employees, the AGENCY may conduct employee interviews. These interviews may consist of recording the names, titles, salary rate, and present duties of those employees performing work on the PROJECT at the time of the interview.

C. **Final Payment**

Final payment of any balance due the CONSULTANT of the gross amount earned will be made promptly upon its verification by the AGENCY after the completion of the work under this AGREEMENT, contingent upon receipt of all PS&E, plans, maps, notes, reports, and other related documents which are required to be furnished under this AGREEMENT. Acceptance of such final payment by the CONSULTANT shall constitute a release of all claims for payment which the CONSULTANT may have against the AGENCY unless such claims are specifically reserved in writing and transmitted to the AGENCY by the CONSULTANT prior to its acceptance. Said final payment shall not, however, be a bar to any claims that the AGENCY may have against the CONSULTANT or to any remedies the AGENCY may pursue with respect to such claims.

It is agreed that payment of any billing will not constitute agreement as to the appropriateness of any item and that at the time of final audit, all required adjustments will be made and reflected in a final payment. In the event that such final audit reveals an overpayment to the CONSULTANT, the CONSULTANT agrees to refund such overpayment to the AGENCY within ninety (90) days of notice of any such payment. Such refund shall not constitute a waiver by the CONSULTANT for any claims relating to the validity of a finding by the AGENCY of overpayment.

D. **Inspection of Cost Records**

The CONSULTANT and his/her subconsultants shall keep available for inspection by representatives of the AGENCY, the STATE, and the United States for a period of three years after final payment the cost records and accounts pertaining to this AGREEMENT and all items related to or bearing upon these records with the following exception: if any litigation, claim, or audit arising out of, in connection with, or related to this contract is initiated before the expiration of the three-year period, the cost records and accounts shall be retained until such litigation, claim, or audit involving the records is completed.

EXHIBIT C-2

PAYMENT
(COST PLUS FIXED FEE)

The CONSULTANT shall be paid by the AGENCY for completed work and services rendered under this AGREEMENT as provided hereinafter. Such payment shall be full compensation for all work performed or services rendered and for all labor, materials, equipment, and incidentals necessary to complete the work specified in Section II, "Scope of Work." The CONSULTANT shall conform with the applicable portion of 48 CFR 31.

A. **Actual Costs**

Payment for all consulting services for this project shall be on the basis of the CONSULTANT's actual cost plus a fixed fee. The actual cost shall include direct salary cost, overhead, and direct nonsalary cost.

1. Direct Salary Costs

   The direct salary cost is the direct salary paid to principals, professional, technical, and clerical personnel for the time they are productively engaged in work necessary to fulfill the terms of this AGREEMENT.

2. Overhead Costs

   Overhead costs are those costs other than direct costs which are included as such on the books of the CONSULTANT in the normal everyday keeping of its books. Progress payments shall be made at the rate shown in the heading of this AGREEMENT, under "Overhead Progress Payment Rate." Total overhead payment shall be based on the method shown in the heading of the AGREEMENT. The three options are explained as follows:

   a. Actual Cost Not To Exceed Maximum Percent: If this method is indicated in the heading of this AGREEMENT, the AGENCY agrees to reimburse the CONSULTANT at the actual overhead rate verified by audit up to the maximum percentage shown in the space provided. Final overhead payment when accumulated with all other actual costs shall not exceed the total maximum amount payable shown in the heading of this AGREEMENT.

   b. Fixed Rate: If this method is indicated in the heading of the AGREEMENT, the AGENCY agrees to reimburse the CONSULTANT for overhead at the percentage rate shown. This rate shall not change during the life of the AGREEMENT.

   A summary of the CONSULTANT's cost estimate and the overhead computation are attached hereto as Exhibit D-1 and by this reference made part of this AGREEMENT. When an Actual Cost method, or the Actual Cost Not To Exceed method is used, the CONSULTANT (prime and all subconsultants) will submit to the AGENCY within three months after the end of each firm's fiscal year, an overhead schedule in the format required by the AGENCY (cost category, dollar expenditures, etc.) for the purpose of adjusting the overhead rate for billing purposes. It shall be used for the computation of progress payments during the following year and for retroactively adjusting the previous year's overhead cost to reflect the actual rate.

   Failure to supply this information by either the prime consultant or any of the subconsultants shall cause the agency to withhold payment of the billed overhead costs until such time as the required information is received and an overhead rate for billing purposes is approved.

   The STATE and/or the Federal Government may perform an audit of the CONSULTANT's books and records at any time during regular business hours to determine the actual overhead rate, if they so desire.

3. Direct Nonsalary Costs

   Direct nonsalary costs will be reimbursed at the actual cost to the CONSULTANT. These charges may include, but are not limited to the following items: travel, printing, long distance telephone, supplies, computer charges, and fees of subconsultants. Air or train travel will only be reimbursed to economy class levels unless otherwise approved by the AGENCY. Automobile mileage for travel will be reimbursed at the current rate approved for AGENCY employees and shall be supported by the date and time of each trip with origin and destination of such trips. Subsistence and lodging expenses will be reimbursed at the same rate as for AGENCY employees. The billing for nonsalary cost, directly identifiable with the Project, shall be an itemized listing of the charges supported by copies of original bills, invoices, expense accounts, and miscellaneous supporting data retained by the CONSULTANT. Copies of the original supporting documents shall be provided to the AGENCY upon request. All of the above charges must be necessary for the services to be provided under this AGREEMENT.

4. Fixed Fee

   The fixed fee, which represents the CONSULTANT's profit, is shown in the heading of this AGREEMENT under Fixed Fee. This amount does not include any additional fixed fee which could be authorized from the Management Reserve Fund. This fee is based on the scope of work defined in this AGREEMENT and the estimated man-months required to perform the stated scope of work. In the event a supplemental agreement is entered into for additional work by the CONSULTANT, the supplemental agreement may include provisions for the added costs and an appropriate additional fee. The fixed fee will be prorated and paid monthly in proportion to the percentage of work completed by the CONSULTANT and reported in the monthly progress reports accompanying the invoices.

   Any portion of the fixed fee earned but not previously paid in the progress payments will be covered in the final payment, subject to the provisions of Section IX, Termination of Agreement.

5. Management Reserve Fund

   The AGENCY may desire to establish a Management Reserve Fund to provide the Agreement Administrator the flexibility of authorizing additional funds to the AGREEMENT for allowable unforeseen costs, or reimbursing the CONSULTANT for additional work beyond that already defined in this AGREEMENT. Such authorization(s) shall be in writing and shall not exceed the lesser of $50,000 or 10% of the Total Amount Authorized as shown in the heading of this AGREEMENT. The amount included for the Management Reserve Fund is shown in the heading of this agreement. This fund may be replenished in a subsequent supplemental agreement. Any changes requiring additional costs in excess of the "Management Reserve Fund" shall be made in accordance with Section XIV, "Extra Work."

6. Maximum Total Amount Payable

   The maximum total amount payable, by the AGENCY to the CONSULTANT under this AGREEMENT, shall not exceed the amount shown in the heading of this AGREEMENT.

   The Maximum Total Amount Payable is comprised of the Total Amount Authorized, which includes the Fixed Fee and the Management Reserve Fund. The Maximum Total Amount Payable does not include payment for extra work as stipulated in Section XIV, "Extra Work."

B. **Monthly Progress Payments**

The CONSULTANT may submit invoices to the AGENCY for reimbursement of actual costs plus the calculated overhead and fee not more often than once per month during the progress of the work. Such invoices shall be in a format approved by the AGENCY and accompanied by the monthly progress reports required under Section III, General Requirements, of this AGREEMENT. The invoices will be supported by an itemized listing for each item including direct salary, direct nonsalary, and allowable overhead costs to

which will be added the prorated Fixed Fee. To provide a means of verifying the invoiced salary costs for CONSULTANT employees, the AGENCY may conduct employee interviews. These interviews may consist of recording the names, titles, and present duties of those employees performing work on the PROJECT at the time of the interview.

C. **Final Payment**

Final payment of any balance due the CONSULTANT of the gross amount earned will be made promptly upon its verification by the AGENCY after the completion of the work under this AGREEMENT, contingent upon receipt of all PS&E, plans, maps, notes, reports, and other related documents which are required to be furnished under this AGREEMENT. Acceptance of such final payment by the CONSULTANT shall constitute a release of all claims for payment which the CONSULTANT may have against the AGENCY unless such claims are specifically reserved in writing and transmitted to the AGENCY by the CONSULTANT prior to its acceptance. Said final payment shall not, however, be a bar to any claims that the AGENCY may have against the CONSULTANT or to any remedies the AGENCY may pursue with respect to such claims. The payment of any billing will not constitute agreement as to the appropriateness of any item and that at the time of final audit, all required adjustments will be made and reflected in a final payment. In the event that such final audit reveals an overpayment to the CONSULTANT, the CONSULTANT will refund such overpayment to the AGENCY within ninety (90) days of notice of the overpayment. Such refund shall not constitute a waiver by the CONSULTANT for any claims relating to the validity of a finding by the AGENCY of overpayment.

D. **Inspection of Cost Records**

The CONSULTANT and the subconsultants shall keep available for inspection by representatives of the AGENCY and the United States, for a period of three years after final payment, the cost records and accounts pertaining to this AGREEMENT and all items related to or bearing upon these records with the following exception: if any litigation, claim, or audit arising out of, in connection with, or related to this contract is initiated before the expiration of the three-year period, the cost records and accounts shall be retained until such litigation, claim, or audit involving the records is completed.

EXHIBIT C-3

PAYMENT
(NEGOTIATED HOURLY RATE)

The CONSULTANT shall be paid by the AGENCY for completed work and services rendered under this AGREEMENT as provided hereinafter. Such payment shall be full compensation for work performed or services rendered and for all labor, materials, supplies, equipment, and incidentals necessary to complete the work. The CONSULTANT shall conform with all applicable portions of 48 CFR 31.

1. **Hourly Rates**

   The CONSULTANT shall be paid by the AGENCY for work done, based upon the negotiated hourly rates shown in Exhibits D and E attached hereto and by this reference made part of this AGREEMENT. The rates listed shall be applicable for the first 12-month period and shall be subject to negotiation for the following 12-month period upon request of the CONSULTANT or the AGENCY. If negotiations are not conducted for the second or subsequent 12-month periods within 90 days after completion of the previous period, the rates listed in this AGREEMENT or subsequent written authorization(s) from the AGENCY shall be utilized for the life of the AGREEMENT. The rates are inclusive of direct salaries, payroll additives, overhead, and fee.

   In the event renegotiation of the hourly rates is conducted, the AGENCY reserves the right to audit for any change in the overhead rate currently in use by the CONSULTANT and modify the hourly rates to be paid to the CONSULTANT subsequent to the renegotiation accordingly. Any changes in the CONSULTANT'S fixed hourly rates may include salary or overhead adjustments.

2. **Direct Nonsalary Costs**

   Direct nonsalary costs will be reimbursed at the actual cost to the CONSULTANT. These charges may include, but are not limited to the following items: travel, printing, long distance telephone, supplies, computer charges, and fees of subconsultants. Air or train travel will only be reimbursed to economy class levels unless otherwise approved by the AGENCY. Automobile mileage for travel will be reimbursed as the current rate approved for AGENCY employees and shall be supported by the date and time of each trip with origin and designation of such trips. Subsistence and lodging expenses will be reimbursed at the same rate as for AGENCY employees. The billing for nonsalary cost, directly identifiable with the PROJECT, shall be an itemized listing of the charges supported by the original bills, invoices, expense accounts, and miscellaneous supporting data retained by the CONSULTANT. Copies of the original supporting documents shall be supplied to the AGENCY upon request. All above charges must be necessary for the services provided under this AGREEMENT.

3. **Management Reserve Fund**

   The AGENCY may desire to establish a Management Reserve Fund to provide the Agreement Administrator the flexibility of authorizing additional funds to the AGREEMENT for allowable unforeseen costs, or reimbursing the CONSULTANT for additional work beyond that already defined in this AGREEMENT. Such authorization(s) shall be in writing and shall not exceed the lesser of $50,000 or 10% of the Total Amount Authorized as shown in the heading of this AGREEMENT. The amount included for the Management Reserve Fund is shown in the heading of this agreement. This fund may be replenished in a subsequent supplemental agreement. Any changes requiring additional costs in excess of the "Management Reserve Fund" shall be made in accordance with Section XIV, "Extra Work."

4. **Maximum Amount Payable**

The maximum amount payable for completion of work under this AGREEMENT shall not exceed the amount shown in the heading of this AGREEMENT. The maximum amount payable includes the Management Reserve Fund, but does not include payment for extra work as stipulated in Section XIV, "Extra Work." No minimum amount payable is guaranteed under this AGREEMENT.

5. **Monthly Progress Payments**

Progress payments may be claimed on a monthly basis for all costs authorized in 1 and 2 above. The monthly invoices shall be supported by detailed statements for hours expended at the rates established in Exhibits D and E, including names and classifications of all employees, and invoices for all direct nonsalary expenses. To provide a means of verifying the invoiced salary costs for the consultant's employees, the agency may conduct employee interviews. These interviews may consist of recording the names, titles, salary rates, and present duties of those employees performing work on the project at the time of the interview.

6. **Inspection of Cost Records**

The CONSULTANT and his/her subconsultants shall keep available for inspection by representatives of the AGENCY, STATE, and the United States, for a period of three years after final payment, the cost records and accounts pertaining to this AGREEMENT and all items related to or bearing upon these records with the following exception: if any litigation, claim, or audit is started before the three-year period, the records shall be retained until all litigation, claims, or audit findings involving the records have been resolved. The three-year retention period begins when the CONSULTANT receives final payment.

7. **Final Payment**

Final payment of any balance due the CONSULTANT of the gross amount earned will be made promptly upon its verification by the AGENCY after the completion of the work under this AGREEMENT, contingent upon receipt of all PS&E, plans, maps, notes, reports, and other related documents which are required to be furnished under this AGREEMENT. Acceptance of such final payment by the CONSULTANT shall constitute a release of all claims for payment which the CONSULTANT may have against the AGENCY unless such claims are specifically reserved in writing and transmitted to the AGENCY by the CONSULTANT prior to its acceptance. Said final payment shall not, however, be a bar to any claims that the AGENCY may have against the CONSULTANT or to any remedies the AGENCY may pursue with respect to such claims.

The payment of any billing will not constitute agreement as to the appropriateness of any item and at the time of final audit, all required adjustments will be made and reflected in a final payment. In the event that such final audit reveals an overpayment to the CONSULTANT, the CONSULTANT will refund such overpayment to the AGENCY within ninety (90) days of notice of the overpayment. Such refund shall not constitute a waiver by the CONSULTANT or any claims relating to the validity of a finding by the AGENCY of overpayment.

EXHIBIT C-4

PAYMENT
(PROVISIONAL HOURLY RATE)

The CONSULTANT shall be paid by the AGENCY for completed work and services rendered under this AGREEMENT as provided hereinafter. Such payment shall be full compensation for work performed or services rendered and for all labor, materials, supplies, equipment, and incidentals necessary to complete the work. The CONSULTANT shall conform with all applicable portions of 48 CFR 31.

1. **Hourly Rates**

   The CONSULTANT shall be paid by the AGENCY for work done, based upon the provisional hourly rates shown in Exhibits D and E attached hereto and by this reference made part of this AGREEMENT. The actual hourly rates will be determined by an audit of 19XX and/or 19XX cost data. The provisional rates listed shall be utilized until the results of the audit are known and will be retroactively adjusted to reflect actual costs. The provisional and/or audited rates listed shall be applicable for the first 12-month period and shall be subject to negotiation for the following 12-month period upon request of the CONSULTANT or the AGENCY. If negotiations are not conducted for the second or subsequent 12-month periods within 90 days after completion of the previous period, the rates listed in this AGREEMENT or subsequent written authorization(s) from the STATE shall be utilized for the life of the AGREEMENT. The rates are inclusive of direct salaries, payroll additives, overhead, and fee.

   In the event renegotiation of the hourly rates is conducted, the AGENCY reserves the right to audit for any change in the overhead rate currently in use by the CONSULTANT and modify the hourly rates to be paid to the CONSULTANT subsequent to the renegotiation accordingly. Any changes in the CONSULTANT'S fixed hourly rates may include salary or overhead adjustments.

2. **Direct Nonsalary Costs**

   Direct nonsalary costs will be reimbursed at the actual cost to the CONSULTANT. These charges may include, but are not limited to the following items: travel, printing, long distance telephone, supplies, computer charges, and fees of subconsultants. Air or train travel will only be reimbursed to economy class levels unless otherwise approved by the AGENCY. Automobile mileage for travel will be reimbursed as the current rate approved for AGENCY employees and shall be supported by the date and time of each trip with origin and designation of such trips. Subsistence and lodging expenses will be reimbursed at the same rate as for AGENCY employees. The billing for nonsalary cost, directly identifiable with the PROJECT, shall be an itemized listing of the charges supported by the original bills, invoices, expense accounts, and miscellaneous supporting data retained by the CONSULTANT. Copies of the original supporting documents shall be supplied to the AGENCY upon request. All above charges must be necessary for the services provided under this AGREEMENT.

3. **Management Reserve Fund**

   The AGENCY may desire to establish a Management Reserve Fund to provide the Agreement Administrator the flexibility of authorizing additional funds to the AGREEMENT for allowable unforeseen costs, or reimbursing the CONSULTANT for additional work beyond that already defined in this AGREEMENT. Such authorization(s) shall be in writing and shall not exceed the lesser of $50,000 or 10% of the Total Mount Authorized as shown in the heading of this AGREEMENT. The amount included for the Management Reserve Fund is shown in the heading of this agreement. This fund may be replenished in a subsequent supplemental agreement. Any changes requiring additional costs in excess of the "Management Reserve Fund" shall be made in accordance with Section XIV, "Extra Work."

4. **Maximum Amount Payable**

The maximum amount payable for completion of work under this AGREEMENT shall not exceed the amount shown in the heading of this AGREEMENT. The maximum amount payable includes the Management Reserve Fund, but does not include payment for extra work as stipulated in Section XIV, "Extra Work." No minimum amount payable is guaranteed under this AGREEMENT.

5. **Monthly Progress Payments**

Progress payments may be claimed on a monthly basis for all costs authorized in 1 and 2 above. The monthly invoices shall be supported by detailed statements for hours expended at the rates established in Exhibits D and E, including names and classifications of all employees, and invoices for all direct nonsalary expenses. To provide a means of verifying the invoiced salary costs for the CONSULTANT's employees, the agency may conduct employee interviews. These interviews may consist of recording the names, titles, salary rates, and present duties of those employees performing work on the PROJECT at the time of the interview.

6. **Inspection of Cost Records**

The CONSULTANT and his/her subconsultants shall keep available for inspection by representatives of the AGENCY, STATE, and the United States, for a period of three years after final payment, the cost records and accounts pertaining to this AGREEMENT and all items related to or bearing upon these records with the following exception: if any litigation, claim, or audit is started before the three-year period, the records shall be retained until all litigation, claims, or audit findings involving the records have been resolved. The three-year retention period begins when the CONSULTANT receives final payment.

7. **Final Payment**

Final payment of any balance due the CONSULTANT of the gross amount earned will be made promptly upon its verification by the AGENCY after the completion of the work under this AGREEMENT, contingent upon receipt of all PS&E, plans, maps, notes, reports, and other related documents which are required to be furnished under this AGREEMENT. Acceptance of such final payment by the CONSULTANT shall constitute a release of all claims for payment which the CONSULTANT may have against the AGENCY unless such claims are specifically reserved in writing and transmitted to the AGENCY by the CONSULTANT prior to its acceptance. Said final payment shall not, however, be a bar to any claims that the AGENCY may have against the CONSULTANT or to any remedies the AGENCY may pursue with respect to such claims.

The payment of any billing will constitute agreement as to the appropriateness of any items and at the time of final audit, all required adjustments will be made and reflected in a final payment. In the event that such final audit reveals an overpayment to the CONSULTANT, the CONSULTANT will refund such overpayment to the agency within ninety (90) days of notice of the overpayment. Such refund shall not constitute a waiver by the consultant or any claims relating to the validity of a finding by the state of overpayment.

EXHIBIT C-5

PAYMENT
(COST PER UNIT OF WORK)

1. When the AGENCY requests that a project be undertaken, the CONSULTANT shall prepare a fee proposal based upon a typical scope of work. Upon agreement by the AGENCY and the CONSULTANT upon a scope of work and related fee, a maximum encumbrance, inclusive of expenses, will be established, to serve as a maximum amount payable for the project. For accounting purposes, the CONSULTANT will be paid by the AGENCY for work done, based upon mutually agreed unit rates for work defined in Exhibits D and E. The listed rates shall be applicable throughout the life of this AGREEMENT. The rates are inclusive of actual salaries, overhead, profit, tools, materials, and equipment necessary or incidental for the completion of the AGREEMENT work.

   Compensation for the following expenditures will be allowed when these costs are incurred directly in fulfilling the terms of this AGREEMENT:

2. The maximum total amount payable by the AGENCY to the CONSULTANT under this AGREEMENT shall not exceed the amount shown on page 1 of this AGREEMENT, unless a supplemental AGREEMENT has been negotiated and executed by the AGENCY prior to incurring any costs in excess of the maximum amount payable.

3. The CONSULTANT may submit invoices to the AGENCY not more often than once per month during the progress of the work for partial payment of work completed to date. The invoices will indicate the units of work completed each day during the invoice period in addition to the previous total. Direct nonsalary costs, such as travel, reproduction, telephone, supplies, and computer costs, shall be supported by an original or a copy of the invoice or billing instrument the CONSULTANT received for payment. For example, a copy of the telephone company's itemized listing showing each call is necessary to verify the billing for long distance telephone calls. Such invoices will be checked by the AGENCY and payment will be made in full for the amount thereof as has been found to represent the value of the completed work, less the amounts previously paid.

EXHIBIT D-1

CONSULTANT FEE DETERMINATION — SUMMARY SHEET
(LUMP SUM, COST PLUS FIXED FEE, COST PER UNIT OF WORK)

PROJECT:

DIRECT SALARY COST (DSC):

Classification	**Man Hours**	**x**	**Rate**	**=**	**Cost**
		x			$
		x			
		x			
		x			
		x			
		x			
		x			
		x			
		x			
			TOTAL DSC	=	$_____

OVERHEAD (OH COST — including Salary Additives):

OH Rate x DSC of _____% x $_____ = $_____

FIXED FEE (FF):

FF Rate x DSC or _____% x $_____ = $_____

REIMBURSABLES:

Itemized = $_____

SUBCONSULTANT COSTS (See Exhibit G): = $_____

GRAND TOTAL = $_____

PREPARED BY: _____ **DATE:** _____

EXHIBIT D-2

CONSULTANT FEE DETERMINATION — SUMMARY SHEET
(SPECIFIC RATES OF PAY)
FEE SCHEDULE

Discipline or Job Title	Hourly Rate	Overhead @ _____	Profit @ _____	Rate Per Hour

EXHIBIT E

BREAKDOWN OF OVERHEAD COST

(**Sample Only —** Actual line item and cost categories and percentages for your firm should be submitted.)

Fringe Benefits

FICA	_____
Unemployment	_____
Medical Aid and Industrial Insurance	_____
Company Insurance and Medical	_____
Vacation, Holiday, and Sick Leave	_____
Commission, Bonuses/Pension Plan	_____
Total Fringe Benefits	_____

General Overhead

State B&O Taxes	_____
Insurance	_____
Administration and Time Not Assignable	_____
Printing, Stationary, and Supplies	_____
Professional Services	_____
Travel Not Assignable	_____
Telephone and Telegraph Not Assignable	_____
Fees, Dues, Professional Meetings	_____
Utilities and Maintenance	_____
Professional Development	_____
Rent	_____
Equipment Support	_____
Office Miscellaneous, Postage	_____
Total Generated Overhead	_____
Total	_____

EXHIBIT F

PAYMENT UPON TERMINATION OF AGREEMENT BY THE AGENCY OTHER THAN FOR FAULT OF THE CONSULTANT (Refer to Agreement, Section IX)

Lump Sum Contracts

A final payment shall be made to the CONSULTANT which when added to any payments previously made shall total the same percentage of the Lump Sum Amount as the work completed at the time of termination is to the total work required for the PROJECT. In addition, the CONSULTANT shall be paid for any authorized extra work completed.

Cost Plus Fixed Fee Contracts

A final payment shall be made to the CONSULTANT which when added to any payments previously made, shall total the actual costs plus the same percentage of the fixed fee as the work completed at the time of termination is to the total work required for the Project. In addition, the CONSULTANT shall be paid for any authorized extra work completed.

Specific Rates of Pay Contracts

A final payment shall be made to the CONSULTANT for actual hours charged at the time of termination of this AGREEMENT plus any direct nonsalary costs incurred at the time of termination of this AGREEMENT.

Cost Per Unit of Work Contracts

A final payment shall be made to the CONSULTANT for actual units of work completed at the time of termination of this AGREEMENT.

EXHIBIT G

SUBCONTRACTED WORK

The AGENCY permits subcontracts for the following portions of the work of this AGREEMENT:

_____

_____

_____

_____

_____

_____

_____

_____

_____

_____

_____

_____

_____

_____

EXHIBIT G-1

SUBCONSULTANT FEE DETERMINATION — SUMMARY SHEET

PROJECT:

DIRECT SALARY COST (DSC):

Classification	**Man Hours**	**x**	**Rate**	**=**	**Cost**
		x			$
		x			
		x			
		x			
		x			
		x			
		x			
		x			
		x			

TOTAL DSC = $_____

OVERHEAD (OH COST — including Salary Additives):

OH Rate x DSC of _____% x $_____ = $_____

FIXED FEE (FF):

FF Rate x DSC or _____% x $_____ = $_____

REIMBURSABLES:

Itemized = $_____

GRAND TOTAL = $_____

PREPARED BY: _____ **DATE:** _____

EXHIBIT G-2

BREAKDOWN OF SUBCONSULTANT'S OVERHEAD COST

(**Sample Only —** Actual line item and cost categories and percentages for your firm should be submitted.)

Fringe Benefits

FICA	_____
Unemployment	_____
Medical Aid and Industrial Insurance	_____
Company Insurance and Medical	_____
Vacation, Holiday, and Sick Leave	_____
Commission, Bonuses/Pension Plan	_____
Total Fringe Benefits	_____

General Overhead

State B&O Taxes	_____
Insurance	_____
Administration and Time Not Assignable	_____
Printing, Stationary, and Supplies	_____
Professional Services	_____
Travel Not Assignable	_____
Telephone and Telegraph Not Assignable	_____
Fees, Dues, Professional Meetings	_____
Utilities and Maintenance	_____
Professional Development	_____
Rent	_____
Equipment Support	_____
Office Miscellaneous, Postage	_____
Total Generated Overhead	_____
Total	_____

EXHIBIT H

(To Be Used Only if Insurance Requirements are Increased)

The professional liability limit of the CONSULTANT to the AGENCY identified in Section XIII, Legal Relations and Insurance of this Agreement is amended to $_____.

The CONSULTANT shall provide Professional Liability insurance with minimum per occurrence limits in the amount of $_____.

- Such insurance coverage shall be evidenced by one of the following methods:
- Certificate of Insurance.
- Self-insurance through an irrevocable Letter of Credit from a qualified financial institution.

Self-insurance through documentation of a separate fund established exclusively for the payment of professional liability claims, including claim amounts already reserved against the fund, safeguards established for payment from the fund, a copy of the latest annual financial statements, and disclosure of the investment portfolio for those funds.

Should the minimum Professional Liability insurance limit required by the AGENCY as specified above exceed $1 million per occurrence or the value of the contract, whichever is greater, then justification shall be submitted to the Federal Highway Administration (FHWA) for approval to increase the minimum insurance limit.

If FHWA approval is obtained, the AGENCY may, at its own cost, reimburse the CONSULTANT for the additional professional liability insurance required.

Notes: Cost of added insurance requirements: $_____.

- Include all costs, fee increase, premiums.
- This cost shall not be billed against an FHWA funded project.
- For final contracts, include this exhibit.

SUPPLEMENTAL AGREEMENT

Project No. _____
Agency _____
Name of Project _____
Agreement No. _____

Gentlemen:

The Local Agency of _____ desires to supplement the agreement entered into with _____ and executed on _____ and identified as Agreement No. _____

All provisions in the basic agreement remain in effect except as expressly modified by this supplement.

The changes to the agreement are described as follows:

I

Section 1, SCOPE OF WORK, is hereby changed to read _____

_____

_____

II

Section IV, TIME FOR BEGINNING AND COMPLETION, is amended to change the number of calendar days for completion of the work to read _____

III

Section V, PAYMENT, shall be amended as follows:

_____

_____

as set forth in the attached Exhibit A, and by this reference made a part of this supplement.

The maximum amount payable under this agreeement as supplemented inclusive of all fees and other costs is now $ _____

If you concur in this supplement and agree to the changes as stated above, please sign in the appropriate spaces below and return to this office for final action.

Sincerely,

_____ Consultant's Signature

_____ Approving Authority

Exhibit "A"

Summary of Payments

	Basic Agreement	Supplement #1	Total
Direct Salary Cost	_____	_____	_____
Overhead (including Payroll Additives)	_____	_____	_____
Direct Non-Salary Costs	_____	_____	_____
Fixed Fee	_____	_____	_____
Total	_____	_____	_____

32.1 General Discussion

The railroad grade crossing program has the following basic objectives:

a. To reduce the accident frequency and severity at grade crossings.

b. To improve operating efficiency.

The program focus is on adding protection to projects that demonstrate a need for safety and efficiency.

To assist in this effort, Congress dedicated a portion of the Highway Trust Fund for rail/highway crossing safety improvements under Section 646 of the 1991 ISTEA. The funds are available on a 90/10 basis (90 percent federal funds and 10 percent state or local funds). When the local agency has a financial hardship, federal funds may cover 99 percent of the project construction cost. The remaining 1 percent is paid by the state of Washington from the Washington State Utilities and Transportation Commission (WUTC) Grade Crossing Protective Fund. Preliminary engineering costs will remain at the 90/10 matching basis.

The first alternative to be investigated for improving a grade crossing is consolidation. Consolidation will eliminate train-vehicle accident potential and maintenance costs. It is also possible that important accessibility may be reduced and unacceptable rerouting of vehicular traffic will result. Nevertheless, when improvement alternatives are considered, these factors should not preclude the consideration of crossing consolidation and the resulting benefits. Removal of crossing surfaces, erection of barriers, and other costs associated with closing a crossing are eligible for Section 646 funding.

The standards contained in this chapter are to be considered minimum standards for railroad/highway crossing projects. They may be inadequate if extraordinarily hazardous conditions exist. In these cases, higher levels of protection should be provided.

32.2 Selection of Appropriate Warning Devices

References: *Manual on Uniform Traffic Control Devices*
WSDOT *Design Manual*
FHWA *Railroad-Highway Grade Crossing Handbook*

.21 Passive Protection. These devices include signing and pavement markings. The crossbuck sign is the responsibility of the railroad. All other signs and pavement markings are the responsibility of the local agency and are eligible for Section 646 funding.

.22 Design Standards for Active Protection. Active grade crossing traffic control devices include all signals, bells, and gates or other devices or methods that inform motorists and pedestrians of the approach or presence of trains, locomotives, or railroad cars on grade intersections. The majority of the devices are automatically activated by the train. Active protection may be appropriate for those locations which have an exposure factor (trains per day times vehicle ADT) greater than 1,500 or are located on railroad main lines. However, a site specific evaluation of train and vehicle traffic volumes and speeds, rural or urban location, potential danger to a large number of people, sight distance and accident history should be completed before making a decision. The basic active protection device consists of post-mounted flashing lights. Gates should be added when any one of the conditions listed in Appendix 32.53 are in existence. Additional cantilevered flashing lights should be provided if any one of the conditions listed in Appendix 32.53 apply. Unless special circumstances exist, all cantilevered installations should include gates. Signal lenses shall be 30 centimeters (12 inches) in diameter. The design standards are illustrated in Appendixes 32.51 and 32.52 and are in addition to those found in the *Manual on Uniform Traffic Control Devices* (MUTCD). MUTCD design standards also apply.

a. Post-Mounted Signals. These flashing light signals are normally placed to the right of approaching highway traffic on all roadway approaches to a crossing. The design standards included as appendices to this division show the minimum dimensions for the following cases:

Appendix 32.51 — Shoulder Section
Appendix 32.52 — Curb Section

b. Automatic Gates. Automatic gates should be added to post-mounted signals when any one of the following conditions is present:

- Multiple main line railroad tracks.
- Multiple tracks at or in the vicinity of the crossing which may be occupied by a train or locomotive so as to obscure the visability of another train approaching the crossing.
- High-speed train operation combined with limited sight distance at either single or multiple track crossings (see Appendix 32.53).
- A combination of high speeds and moderately high volumes of highway and railroad traffic.
- Either a high volume of vehicular traffic, high number of train movements, school buses, or trucks carrying hazardous materials, unusually

restricted sight distance, continuing accident occurrences, or any combination of these conditions.

When utilizing gates, the departure side of the crossing is always left open to allow highway traffic to escape from the crossing.

c. Cantilevered Signals. Cantilevered flashing light signals should be added to post-mounted signals and gates when any one of the following conditions is present:

- There are considerable distractions near or beyond the crossing which would compete for the driver's attention.
- Traffic or parking conditions are such that the view of a post-mounted flashing light signal could be blocked.
- The angle of approach to the crossing is acute and post-mounted signals could go undetected.
- The highway has two or more lanes in each direction.
- The highway carries high-speed and high-volume traffic.

Unless special circumstances exist, all cantilevered installations should include gates. The design standards included as appendices to this division show the minimum dimensions for the following cases:

Appendix 32.51 — Shoulder Section
Appendix 32.52 — Curb Section

All crossing sites will be reviewed and recommendations made by a diagnostic team consisting of representatives of the Federal Highway Administration (FHWA), railroad, WUTC, local agency, and the Washington State Department of Transportation (WSDOT) TransAid Service Center and Regional TransAid Engineer.

d. Traffic Signals at or Near Grade Crossings. When highway intersection traffic control signals are within 61 m (200 feet) of a grade crossing, control of the traffic flow should be designed to provide the vehicle operators using the crossing a measure of safety at least equal to that which existed prior to the installation of such signal. Accordingly, design, installation, and operation should be based upon a total systems approach in order that all relevant features may be considered (see MUTCD Section 8C-6).

.23 Traffic Barriers. A railroad signal may be a point hazard warranting the use of a traffic barrier or crash cushion. Traffic barrier and crash cushion guidelines are shown in Section 710 of the WSDOT *Design Manual*. A guardrail should be installed if the speed limit is greater than 60 kph (35 mph).

.24 Approaches. Funding to improve road approaches for safety purposes may be considered as a part of signalization projects on a case-by-case basis. Approach work for safety improvement includes profile corrections to reduce approach grades at main line locations.

.25 Crossing Surfaces. Funding to improve crossing surfaces may be considered as a part of signalization projects on a case-by-case basis. The street or highway must have an ADT of at least 7,500 in order to be considered. Funding will be provided only on a 90/10 matching (90 percent federal/10 percent local) basis for the improvement of crossing surfaces. WUTC funding is not available for this type of project.

.26 Illumination. Railroad grade crossings may be considered for illumination where a nighttime accident pattern is known to exist or is likely to occur. These projects will be considered on a case-by-case basis and may be funded only on a 90/10 matching (90 percent federal/10 percent local) basis. WUTC funding is not available for this type of project.

.27 Design Deviations. Deviations will be considered upon receipt by the Assistant Secretary for TransAid of a written request accompanied by the following documentation:

- A fully-dimensioned (25 mm = 15 m (1″ = 50′) minimum) plan of the site, including topographic features, all right-of-way lines, location of rails, easements, structures, curbs or shoulders, pavement lines, and proposed signal locations.
- Cross-section at each signal location, with all relevant dimensions and features.
- Photographs of the site.
- A statement outlining why this deviation is justified.

32.3 Project Development Process

.31 Project Application Package. A local agency wishing to develop a project to provide protection at a railroad/highway crossing must submit to the Regional TransAid Engineer an original and two copies of the completed Project Prospectus, along with the initial Local Agency Agreement and items of supporting data listed in the Project Application Checklist (see Chapter 21).

The railroad should be contacted during the project development process to provide notification of the proposed project and to obtain relevant data on train movements. Nearly all rail trackage in Washington State is operated by the Union Pacific or Burlington Northern Santa Fe. The contact person for these railroads are listed below:

Mr. John Trumbull, Manager
Industry and Public Projects
Union Pacific Railroad Company
1313 First Street North
Nampa, ID 83651
(208) 465-8211

Mr. Mike Cowles
Coordinator Public Programs
Engineer Public Works
Burlington Northern Santa Fe Railroad Co.
2000 First Interstate Center
999 Third Avenue
Seattle, WA 98104-1105
(206) 625-6146

The Regional TransAid Engineer will assist in determining the owner of the trackage and the appropriate contact person if necessary. In completing the Project Application Package, sufficient preliminary engineering funds should be requested to cover the agency's PE costs as well as an additional $3,000 to $5,000 to cover the railroad's costs. The additional dollars for PE work done by the railroad should be shown under "other" on the Local Agency Agreement.

If existing devices are to be removed, the agency will notify the TransAid Operations Engineer who will determine the salvage rights and values, and determine the railroad's credit to the FHWA, if they are federal property.

.32 Preparation of Project Data. When preliminary engineering funding has been approved, the agency should submit the necessary project data to the railroad along with a notice to proceed. Appendix 32.54 shows a Railroad Project Data Form which provides a railroad with data to prepare an estimate of cost. The data required by the railroad is traffic lane widths, shoulder widths, curbs and sidewalks, angle at which the highway crosses the tracks, and the legal description of the crossing location. The location of any underground and overhead utilities in the area which will be excavated for the signal foundation should also be included.

.33 Railroad Agreement and Petition. Upon completion of the signal layout and design, the railroad will prepare the standard agreement shown in Appendix 32.55 and a petition to the Washington State Utilities and Transportation Commission for installation of the crossing protection as required by RCW 81.53.261. At this time, the railroad will also request construction authorization and the local agency should proceed with the construction authorization process as per 32.34.The drawing shall form part of the agreement.

Preliminary engineering and construction funding may be registered simultaneously if no right-of-way is required.

The petition and the agreement will be forwarded to the local agency for execution and return to the railroad. The railroad will file the petition with the WUTC. The WUTC will review the petition and, if appropriate, issue an order directing installation of the crossing protection.

.34 Construction Authorization. The local agency should prepare and submit the following to the Regional TransAid Engineer with the request for construction funding:

a. Right-of-Way certification (if not previously submitted).

b. Supplement to the Local Agency Agreement.

c. Railroad agreement.

When improvement of the crossing surface and/or illumination has been approved for the project, the construction cost should be shown on line "m. other" of the Local Agency Agreement at the ratio of 90 percent federal funds and 10 percent local funds.

WSDOT will review the PS&E package and request funding authorization from FHWA and the WUTC for the 1 percent matching share. The agency will be notified when construction funds are approved and the supplement to the Local Agency Agreement returned. The agency should request a contract number from the Regional TransAid Engineer and notify the railroad to proceed with construction.

.35 Construction Administration and Project Closure. Upon receipt of construction authorization, the railroad will order material and proceed with construction. Approximately five to eight months are required to obtain the signal material. The railroad will attempt to coordinate construction with other projects in the area to more effectively utilize crews.

The local agency is responsible for all work associated with a railroad agreement, from date of authorization for the railroad to proceed with the work through final completion of the work, subsequent closing of the agreement, and completion of the final audit.

The WSDOT TransAid Operations Engineer will notify the Regional TransAid Engineer of the construction schedule received from the Railroad. The Regional TransAid Engineer in turn will notify the agency that will oversee the construction of railroad work and request that they contact the railroad's project representative to confirm the construction schedule and to maintain a line of communication at the project level.

The local agency is required to document the work performed by the railroad to ensure that the railroad's billing can be verified, thereby leaving an audit trail. This documentation may be performed by random oversight which is defined as on-site reviews two or three times a week while the railroad is working.

The documentation should be a record in the form of a diary and supplemental reports of the work performed by the railroad. This record shall be sufficiently complete to establish a record of the following:

- Number and general type of labor and supervision and number of hours chargeable to the agreement work.
- Number and type of major items of equipment used and number of hours chargeable to the agreement work.
- Description of work accomplished.
- Major items of material installed.
- Major items of material removed and disposition, i.e., salvage, scrap, junk.
- Details concerning any changes or extra work or other conditions affecting the work.

Within 30 days of project completion, the railroad will by letter notify the local agency that construction is completed. The local agency requests final billing from the railroad.

The local agency and the WUTC will be notified when the signals are completed and in operation. The agency should notify the Regional TransAid Engineer when the project is completed and submit any railroad and agency billings.

WSDOT will perform the final inspection and send a 90-day closure letter to the local agency (see Chapter 53).

32.4 Other Projects With Railroad Involvement

.41 General Discussion. If a highway project contains a railroad crossing within construction limits, the local agency must notify the railroad company involved in the event that a permit of an agreement will be necessary. Early contact with the railroad will minimize delays to the project.

.42 Procedure for Securing Railroad Agreements. The standard agreement shown in Appendix 32.55 shall be used. The procedure for executing the agreement varies slightly, depending on project circumstances:

- Local agencies shall submit to the Regional TransAid Engineer two copies of the executed agreement reflecting the detailed project cost estimate.
- When the affected railroad right-of-way is owned by more than one railroad company, the local agency shall execute an agreement with each company for each crossing within the project boundaries.
- When more than one railroad company uses the affected railroad right-of-way owned by one company, the local agency shall execute the agreement with the owning company which acts on behalf of the other companies. The other railroad must be identified by name in the agreement.
- On projects where the construction contract will be administered by WSDOT, in addition to the above agreement, a three-party agreement (state, railroad, local agency) in letter form must be submitted with the plans, specifications, and estimates (PS&E). This agreement must explain that the state can make payments directly to the railroad. The three-party agreement will first be executed by the local agency and railroad, and then by the state after its review. A sample letter-type agreement is shown in Appendix 32.56.

32.5 Appendixes

32.51 Signal Design — Shoulder Section (Metric/English)

32.52 Signal Design — Curb Section (Metric/English)

32.53 Railroad/Highway Grade Crossing Protection Sight Distance Diagram and Gate Warrant Form (Metric/English)

32.54 Railroad Project Data Form

32.55 Standard Local Agency Railroad Agreement

32.56 Sample Letter — Type 3 Party Agreement

SHOULDER SECTION
ELEVATION VIEW FOR SUBMITTAL

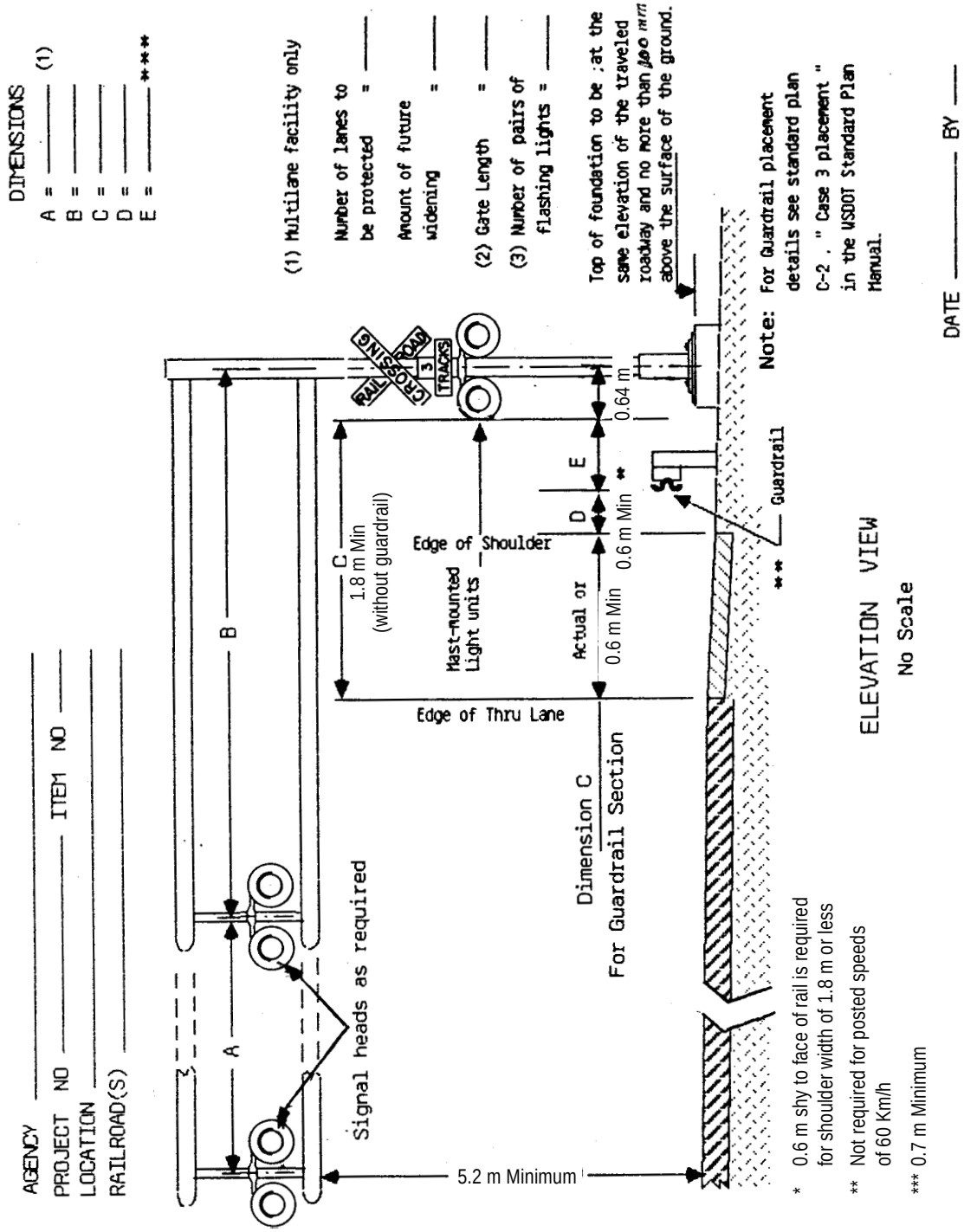

6:P:LAG3

CURB SECTION
ELEVATION VIEW FOR SUBMITTAL

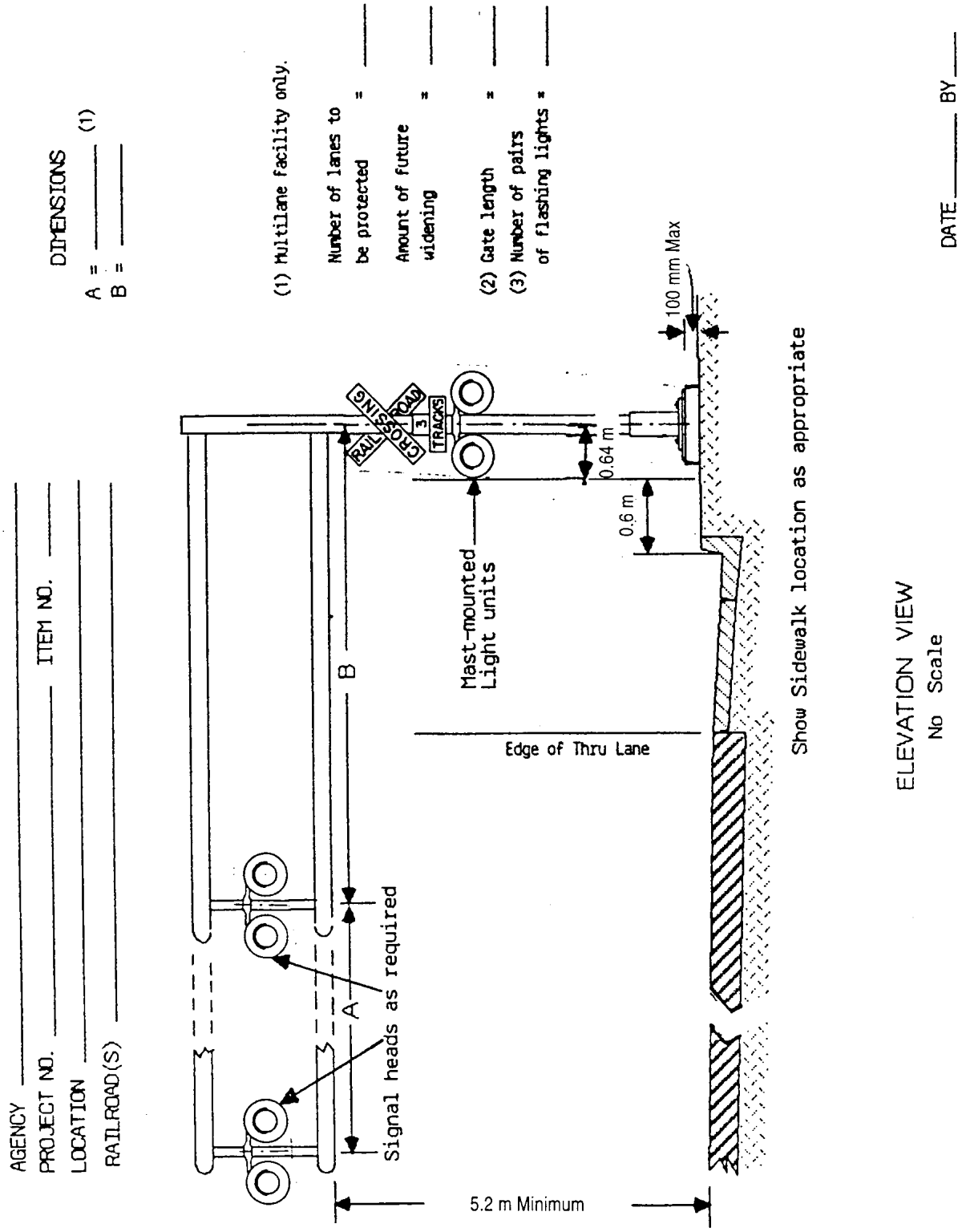

CURB SECTION
ELEVATION VIEW FOR SUBMITTAL

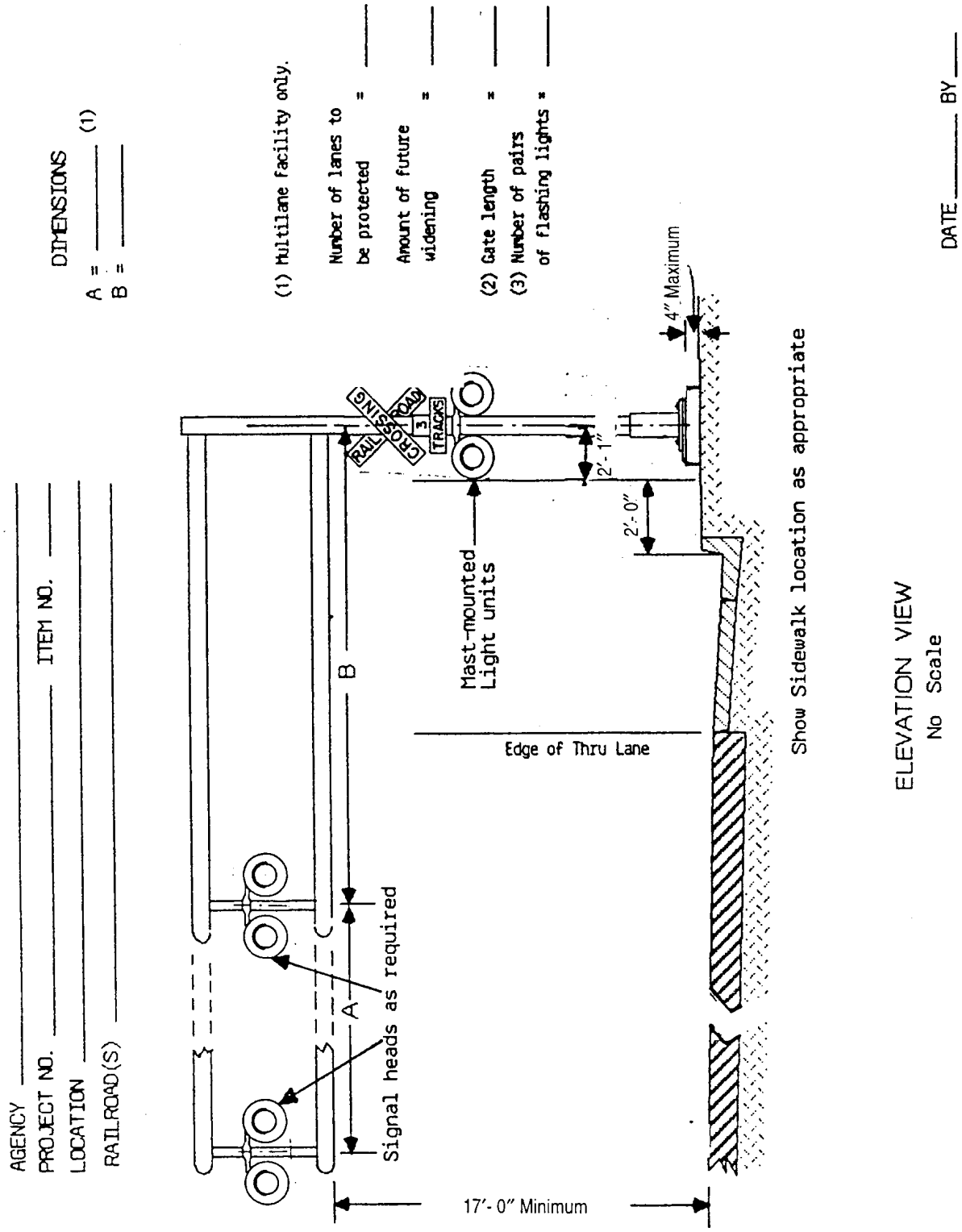

7:P:LAG3

Case 1 Departure From Stop		Case 2 Moving Vehicle									
Train Speed (km/h) V_T	0	Vehicle Speed (km/h) Vv									
		20	30	40	50	60	70	80	90	100	110
		f = 0.40	0.40	0.38	0.35	0.33	0.31	0.30	0.30	0.29	0.28
		Distance along railroad from crossing - d_T (meters)									
20	95	50	40	40	40	40	40	45	45	50	50
40	185	100	80	75	75	80	85	85	90	95	100
60	275	145	120	115	115	115	125	130	135	145	155
80	355	195	160	150	150	155	165	170	180	190	205
100	455	240	200	190	190	195	205	215	225	235	255
120	550	290	240	225	225	230	245	255	265	285	305
140	640	335	285	265	260	270	285	300	310	330	355
Distance along highway from crossing - d_H (meters)											
		25	40	55	70	95	120	150	180	215	255
Required design sight distance for combination of highway and ain vehicle speeds; 19.5 m truck crossing a single set of tracks at 90°.											

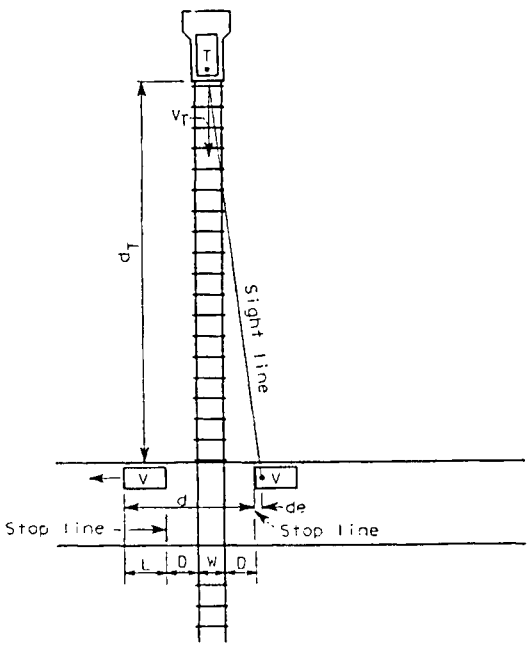

CASE 1
(stopped vehicle)

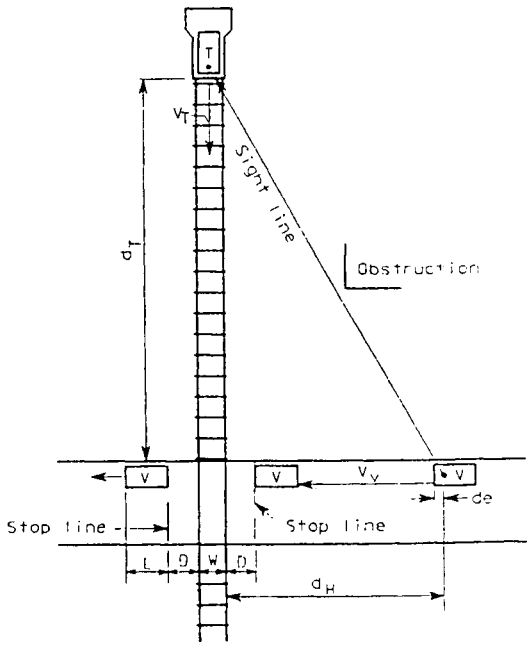

CASE 2
(moving vehicle)

Adjustments must be made for skew crossings.
Assumed flat highway grades adjacent to and at crossings.
W = Distance between outer rails (single track W = 1.5 m)
D = Distance from stop line to nearest rail (assumed 4.5 m)
d_e = Distance from driver to front of vehicle (assumed 3.0 m)

d_H = Sight distance along highway
d_T = Sight distance along railroad tracks
V_V = Velocity of vehicle
f = Coefficient of friction
V_T = Velocity of train
L = Length of vehicle (assumed 19.5 m)

8:P:LAG3

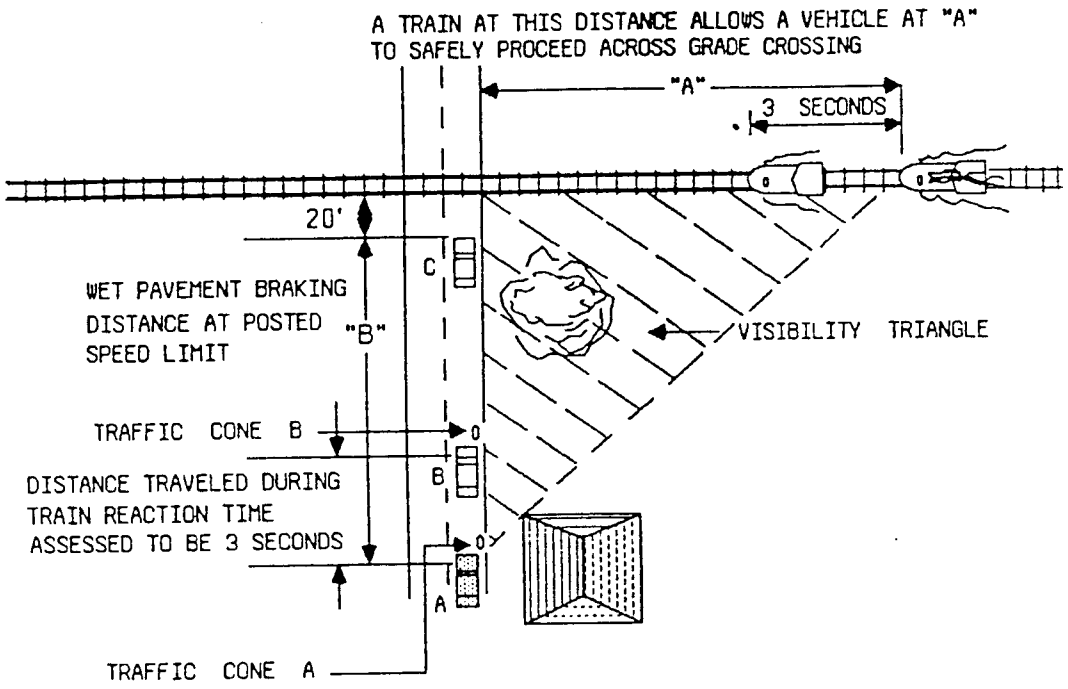

Required Design Sight Distances for Combinations of Highway and Train Vehicle Speeds

Train Speed	Highway Speed in MPH							
	0	10	20	30	40	50	60	70
	Distance Along Railroad from Crossing ("A")							
10	162	126	94	94	99	107	118	129
20	323	252	188	188	197	214	235	258
30	484	378	281	281	295	321	352	387
40	645	504	376	376	394	428	470	516
50	807	630	470	470	492	534	586	644
60	967	756	562	562	590	642	704	774
70	1,129	882	656	656	684	750	822	904
80	1,290	1,008	752	752	788	856	940	1,032
90	1,450	1,134	844	844	884	964	1,056	1,160
	Distance Along Highway from Crossing ("B")							
	20	65	125	215	330	470	640	840

Note: 1 mph = 1.61 kph and 1 foot = .304 meters

8:P:LAG3

RAILROAD PROJECT DATA

Furnish Appropriate Information to Railroad With Each Project

1. Agency Name _____
2. Location of Crossing _____
3. Number of Traffic Lanes _____ Railroad Tracks _____
4. Crossing Number Available from Railroad _____
5. Statistics:

	D _____	H _____
A _____	E _____	I _____
B _____	F _____	J _____
C _____	G _____	K _____

Rural ____ or ____ Urban

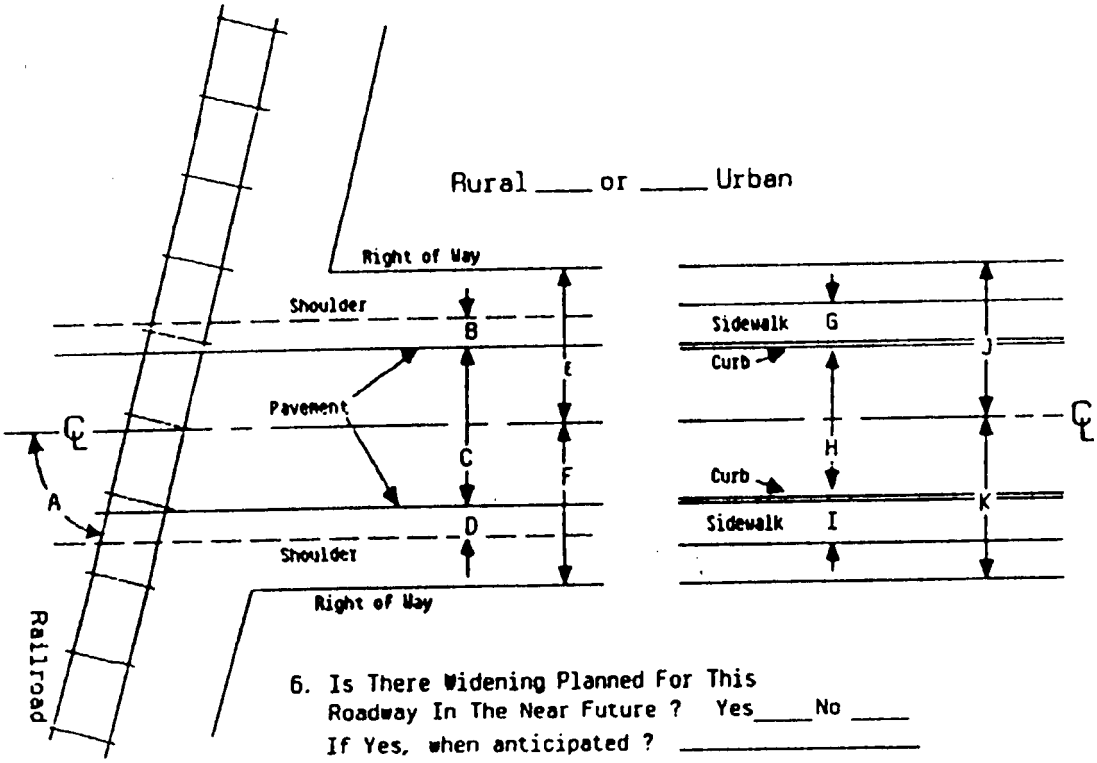

6. Is There Widening Planned For This Roadway In The Near Future ? Yes____ No ____
   If Yes, when anticipated ? _____
   If within 3 years, provide a profile of the proposed approach roadway and show proposed ultimate dimensions on above plan.

9:P:LAG3

Washington State
Department of Transportation

Local Agency Railway Agreement
Federal Aid Safety Projects Highway-Railway Grade Crossing Warning Devices

Local Agency _____ Project No. _____

Railway _____ Agreement No. _____

The above parties having complied, or hereby agreeing to comply, with the terms and conditions set forth in (1) Title 23, U.S. Code, Highways, (2) the regulations issued pursuant thereto, and (3) the Policies and Procedures promulgated by the Washington State Department of Transportation, relating to grade crossing warning devices, hereby agree to proceed with the accomplishment and completion of the project hereinafter described.

Project Description

Local Agency road name _____

Location _____

Railway line name _____

Location _____

Description of Work

The site plan attached hereto as Exhibit C further describes the work.

Construction is estimated to be completed in _____ days, following execution of this agreement and authorization to proceed.

Estimate of Cost

Type of Work	Labor	Non-Labor	Total
1. Install warning devices (type)			
a. Freight material handling			
b. Equipment rental			
c. Expenses			
d. Salvage			
e. Other			
2. Engineering and accounting			
3. Liability insurance			
4. Labor surcharge			
5. Other work by railroad* Yes ❒ No ❒ Exhibit A attached hereto			
6. Total project costs			

*If detail is required, attached Exhibit A. Insert Exhibit A totals in this line.

The above parties further stipulate that they agree to and will comply with the provisions set forth on the reverse hereof and made a part of this agreement. Where a franchise or permit exists, the parties shall determine to what extent the franchise or permit is superseded by this agreement. Such determination should be in writing and attached as part of the agreement.

Repair or replacement of damaged or obsolete signals. The cost of repair or replacement of the signals shall be borne on the ratio of _____ percent Local Agency and _____ percent railway.

This agreement shall inure to the benefit of and be binding on the parties hereto, their successors and assigns.

Adopted by Resolution / Ordinance No. _____ Railroad Official _____

Local Agency Official _____ Title _____

Date _____ Date _____

DOT Form 140-044 (front)
Revised 8/95

I. Scope of Work

The Railway will provide all the work, labor, materials, and services to install the warning devices hereinafter called "signals" as described and set forth in the "Project Description" and "Estimate of Cost."

The Local Agency shall perform those services necessary to facilitate the processing of all necessary documents required for the orderly progress of the project in accordance with the policies and procedures of the Washington State Department of Transportation (hereinafter called "Department") and the *Federal Aid Policy Guide* of the Federal Highway Administration (hereinafter called "FHWA."

The Local Agency shall install without expense to the Railway advance warning signs, standard pavement markings for railroad crossings, and guardrails or barriers to protect the signals from highway traffic when such protection is required.

II. Funding

The project will be financed in conformity with FHWA regulations adopted for safety improvement projects authorized in the Intermodal Surface Transportation Efficiency Act of 1991 or the Highway Safety Act of 1976 utilizing ninety percent (90%) federal funds and ten percent (10%) Local Agency funds for those costs necessary to complete the project.

III. Payment

Upon written authorization by the Local Agency, the Railway may proceed with the project. Following execution of this agreement, progress bills may be submitted to the Local Agency for the cost of labor, materials, and other services provided to date of billings and as shown in the Estimate of Cost or supplemental estimates of cost furnished by the Railway and accepted by the Local Agency, the Local Agency shall pay such progress billings promptly upon receipt. Final and detailed billing of all incurred costs shall be made by the Railway within one year of project completion, and the Local Agency shall pay all eligible amounts of such bill, less progress payments previously made.

The Local Agency agrees to reimburse the Railway for the amount shown in the Estimate of Cost for the actual cost of labor, materials, and other services furnished by the Railway pursuant to this agreement, provided the costs are eligible.

IV. Availability of Records

All project records in support of all costs incurred and expenditures are to be kept and maintained by the Railway and by the Local Agency in accordance with Subchapter B, Subpart H or Section 140.922(c) of the *C.F.R.*

The records shall be open to inspection by the Department and FHWA at all reasonable times and shall be retained and made available for such inspection for a period of not less than three years from the final payment of any funds to the Railway.

V. Maintenance of Facility

Upon completion of installation, the Railway shall operate and maintain the signals as required by law. The Local Agency will maintain the advance warning signs, the standard pavement markings for railroad crossings, and protecting barriers or guardrails at Local Agency expense. However, in the event that any existing or future legislation makes federal, state, or other public funds available for the operation, maintenance, repair, or replacement of signals at grade crossings, the Local Agency shall cooperate with the Railway to secure said funds for the operation, maintenance, repair, or replacement of the signals installed pursuant hereto. This agreement may be supplemented and amended as necessary for the operation and maintenance of said signals to qualify for such funds.

VI. Repair or Replacement of Damaged or Obsolete Facility

In the event one or more of the signals installed under this agreement are partially or wholly destroyed and its or their replacement value or cost of repairing cannot be recovered from the person or persons responsible for such destruction, then in that event, cost of repair of the signals or cost of installation of a new signal or signals shall be borne on a ratio agreed upon by the Railway and the Local Agency as specified on the front hereof.

If the damage to a signal is caused by highway traffic, Local Agency will cooperate with the Railway in determining the location and identification of the parties responsible to the extent of making accident records available.

If said damaged signals cannot, through age, be maintained or require replacement by virtue of the obsolescence, then the cost of replacing the signals shall be negotiated by the Local Agency and the Railway as specified on the front hereof, with such state, federal, or other public funds as may be available at the time such replacement becomes necessary.

VIII. Disposition of Signals No Longer Required

If for any reason, signals shall no longer be required at grade crossing and, in the opinion of the Railway and WSDOT TransAid, they are not obsolete, the state will take ownership and arrange to have them relocated to some other grade crossing. If said relocation is agreed upon by the WSDOT TransAid and the Railway, the divisions of cost of such relocation shall be agreed upon between the Local Agency and the Railways prior to such removal. If for any reason the signals shall no longer be required at the grade crossings and in the opinion of the Railway and WSDOT TransAid the signals are obsolete, the Railway may remove the signals and credit the Local Agency with the value of salvage recovered less cost of removal. The funds credited by the Railway will be reimbursed to the FHWA.

VIII. Relocation Required by Improvement

In the event that either railway or highway improvement will necessitate a rearrangement of relocation or alternation of the existing signals at said crossing, the party whose improvement causes such changes shall bear the entire cost thereof without expense to the other party. The Railway and WSDOT TransAid will make the decision as to whether the signals or control circuits will be obsolete or inadequate to accommodate an improvement, subject to conformance with the policies and procedures promulgated by the Washington State Department of Transportation relating to grade crossing warning devices.

IX. Nondiscrimination Provision

If the Railway enters into a contract or agreement with a contractor to perform any of the work which the Railway is required to perform under the terms or this agreement, the Railway for itself, its assigns, and successors in interest, agrees that it will not unlawfully discriminate in its choice of contractors and will include all the nondiscrimination provisions set forth in Exhibit B, attached hereto and made a part hereof, in any such contract or agreement.

X. Audit of Federal Aid Project

The Department, if services of a consultant are required, shall be responsible for audit of the consultant's records to determine eligible federal aid costs on the project. The report of said audit shall be in the Department's files and made available to the state and the federal government.

An audit shall be conducted by the Department's Internal Audit Office in accordance with generally accepted governmental auditing standards as issued by the United State General Accounting Office by the Comptroller General of the United States; WSDOT Directive D27-50, Consultant Authorization, Selection, and Agreement Administration; and Office of Management and Budget circular A-128.

If upon audit, it is found that an overpayment of federal money in ineligible items of cost has occurred, the Railway shall reimburse the Local Agency for the amount of such overpayment in excess of participation (see Section VIII). The funds credited by the Railway will be reimbursed to the FHWA.

DOT Form 140-044 (back)
Revised 8/95

Date

Name
Title
Address
City

Agency
Job Title
FA Project No.
Contract

Dear :

This letter is intended as a Memorandum of Understanding between the _____ Railroad, _____ County, and the Washington State Department of Transportation. These three organizations will be referred to in this memorandum as the "Railroad Company," the "County," and the "State," respectively.

Authority for this memorandum is based on an agreement _____, executed by the State on _____. The work described herein and covered by the subject agreements is to be performed under Project Number _____, State Contract No. _____, _____.

It is necessary to provide a method of reimbursement to the Railroad Company for the cost of providing flagging and protective service and devices resulting from the construction operations of the contractor, as set forth in the above noted agreement. Therefore, the following procedures for the submittal and payment of bills for such costs are established:

Flagging costs incurred by the Railroad Company as a result of the operations of the County's contractor shall be at the contractor's expense. The Railroad Company will submit bills for these expenses to the State, the State will pay the bills and deduct such monies paid from the amounts due the contractor on monthly estimates.

Upon completion of the project, the full amount of the estimated flagging costs, as set aside by the State as a part of the Contract Work Order Accounting Plan, less the amount paid to that date, will be retained by the State for a period of 150 calendar days after said completion. After the 150-day period, the State will refund to the contractor the balance of the retained fund, or if the retained funds are insufficient, the contractor will be billed for the additional costs incurred by the Railroad Company.

Should the County receive any bills from the Railroad Company for the flagging and protective services as described herein, they shall forward such bills to the State for payment.

Your signature and the signature of the appropriate company officer, in the spaces provided, will indicate acceptance of the provisions of this memorandum by your respective agencies.

Sincerely,

Assistant Secretary for TransAid

cc: Regional TransAid Engineer

_____

Title:
City or County

_____

Title:
Railroad Company

This chapter provides information and instructions on procedures applicable to the Emergency Relief program on and off the federal aid highway system.

Agencies should notify the Regional TransAid Engineer (RTE) involving damages to roadway systems caused by an emergency/disaster.

33.1 General Discussion

When an emergency exceeds the capability of state and local government, federal assistance can be requested from:

- The Federal Highway Administration (FHWA) under Title 23, U.S.C., Section 125 for the restoration of damaged roads and bridges on federally functionally classified routes except for rural minor collectors and local access roads.
- Federal Emergency Management Agency (FEMA) under Public Law 93-288, as amended, "Robert T. Stafford Disaster Relief and Emergency Assistance Act, Nov. 1988," for restoration of damaged roads and bridges off of the eligible federal aid classified roads and streets.

Appendix 33.51 depicts the steps in applying for disaster relief assistance. These steps are described more fully in the remainder of this chapter.

References

- State of Washington Comprehensive Emergency Management Plan
- WSDOT *Disaster Plan* (M 54-11) — November 1994
- *Emergency Relief Disaster Assistance* manual — January 1994

33.2 Initial Steps Immediately After a Disaster

.21 Initial Notification. A local Emergency Management Office immediately notifies the Washington State Emergency Management (EM) via the fastest means possible.

.22 Declaration of Emergency by Local Agency. The declaration is signed by elected official(s) in accordance with the State of Washington Comprehensive Emergency Management Plan. In accordance with RCW 38.52, the state and each political subdivision (e.g., local agency) has prepared a Comprehensive Emergency Plan which is put into effect when a disaster occurs.

.23 Recording Site Specific Costs. It is very important to document all expenses incurred by an agency in coping with the disaster or catastrophe. Records must be sitespecific, identified by route and milepost within the route. Cost records must be supported by labor, equipment, and materials. Failure to document costs as outlined above is a major reason for ineligibility findings.

.24 Additional Data Gathering. Agencies should gather evidence of the disaster such as newspaper clippings and photos that can be reproduced. This information is helpful in the preparation of the field reports to request emergency relief funds.

.25 Requesting State Assistance. During and immediately after the disaster, the local Emergency Management Office conducts "damage assessments" to determine the magnitude, dollar value, effects, and impacts of the emergency or disaster (Appendixes 33.54, 33.55, and 33.59).

It is very important to make timely and accurate damage reports to EM. These reports should describe the disaster and any local response. The "Incident Report" and "Disaster Analysis Report" forms provided by EM and completed by the local agency (see Annex G of the Comprehensive Emergency Management Plan) are approved means of providing such a report. In addition, this notification should include the local agency's "Declaration of Emergency."

.26 Proclamation by the Governor. From the information received from the local Emergency Management Office, EM will inform the Governor. If the situation warrants state assistance, EM will coordinate the state response to supplement the efforts of local governments. The Governor will proclaim a State of Emergency when necessary.

The Governor's proclamation is required to obtain assistance under both Title 23, U.S.C., Section 125, and Public Law 93-288, as amended (see Appendix 33.56).

.27 Preliminary Damage Assessments by EM, FEMA, WSDOT, and FHWA. The state, through EM and in cooperation with FEMA, WSDOT, and FHWA, begins the analysis of the situation by conducting a preliminary damage assessment to determine the severity and magnitude of the situation. This information is needed to determine what type of assistance is needed to deal with the problems.

Preliminary Damage Assessments (PDAs) are performed in accordance with the State Comprehensive Emergency Management Plan (Annex S) to obtain relatively accurate and rapid assessment of damages.

The PDA is used by the following agencies:

- By EM in formulating a report and recommendation to the Governor which is used as the basis for submitting a request to the President.

- By the FEMA Regional Director in formulating a recommendation to the FEMA Administrator and the President concerning the request from the state.
- By the Washington State Department of Transportation (WSDOT) TransAid Service Center preparing the request for Emergency Relief Assistance (ER) under Title 23 for repairs on a federal aid system.

The PDAs are prepared by assessment teams representing federal, state, and local agencies as follows:

FEMA — The team leader is a designated engineer from FEMA. The state member will be designated by EM and the local member will be designated by the local jurisdiction.

FHWA — The team leader is a designated engineer from FHWA. The state member will be designated by WSDOT and local member will be designated by the local jurisdiction.

Every effort will be made to combine teams to reduce the impact on local jurisdiction; however, there may be cases where combining teams is not practical.

Local agencies should have all relevant information available for the teams, including forms (EM 129,130, Appendixes 33.53 and 33.59) and site maps of the damaged areas, cross referenced to form EM 129.

At this point, a breakdown of damage costs is made: those covered by Title 23, Section 125, are processed by FHWA, and those covered by Public Law 93-288 are processed by EM.

From this point on, the processing of Title 23 and PL93-288 projects are different, and the procedures are shown separately in the following sections.

33.3 Emergency Relief for Eligible Federal Aid Roads and Streets

The Emergency Relief (ER) Program authorized by Title 23, U.S.C., Section 125, provides funds for emergency opening, repair, or reconstruction of roadways on an eligible federal aid road/street. It also provides emergency funds for other roads and trails on federal lands which have suffered serious damage due to natural disaster or catastrophic failure and for which an emergency has been declared by the Governor and concurred in by the FHWA Administrator (USDOT).

Federal share payable for eligible emergency repair to minimize damage, protect facilities, or restore essential traffic accomplished within 180 calendar days after the last day of the actual occurrence of the natural disaster or catastrophic failure may be eligible for 100 percent federal aid. Repairs performed beyond 180 days after the occurrence of the disaster will be funded at the current program participation ratio for the federal aid route affected.

This program is administered by FHWA through WSDOT. However, repairs to roads maintained by federal agencies (Forest Service, Park Service, etc.) are handled directly by FHWA, Federal Lands Division Office in Vancouver, Washington, and the responsible agency.

.31 Application for Federal Assistance.

a. Letter of Intent (Appendix 33.54). WSDOT TransAid prepares and transmits to FHWA a "letter of intent" to apply for Emergency Relief funds under Title 23, U.S.C., Section 125. This request may precede or follow the Governor's proclamation.

b. Acknowledgement of Letter of Intent (Appendix 33.55). The FHWA's response requests agencies to proceed with emergency repairs to restore essential travel, to protect remaining facilities, to reduce the extent of damage, to begin preliminary engineering consisting of surveys, design, and preparation of construction plans; to perform that permanent restoration work which is required as part of the emergency operation, and to use local forces or negotiated contract or equipment-rental contracts as necessary to perform the work. RECORDS MUST BE SITE-SPECIFIC (identified by K.P. (M.P.) for each eligible federal aid routes). COSTS MUST BE SUPPORTED BY LABOR, EQUIPMENT, AND MATERIAL RECORDS. This is necessary to obtain full reimbursement.

   The eligibility of such work for federal funding is contingent upon concurrence by the FHWA Administrator. Each affected local agency will be notified of FHWA's response by WSDOT TransAid.

c. Request for ER Funds. WSDOT TransAid prepares and sends an official request for ER funds to FHWA. The request is based on the following information provided by the local agency in the form of a report (see Appendix 33.57):

   - The Preliminary Damage Assessment Report.
   - Maps showing the location of damages.
   - Photographs (reproducible), newspaper articles, and related documents.
   - An impact assessment, including impact on the local agency road budget.
   - The Governor's proclamation.
   - Additional data as requested by FHWA.

d. Action on Request for ER Funds. The FHWA Division Office prepares a field report and recommendation, based on the above information plus FHWA field reviews, and submits them through channels to the FHWA Administrator.

e. Approval of ER Funds. The FHWA Administrator acts on the request and informs FHWA Regional and Division Offices. WSDOT TransAid is informed accordingly, and it notifies the local agency (Appendix 33.58).

The ER process is such that the decision on ER eligibility/noneligibility does not occur until approximately 60 days after the incident period. However, emergency operations as outlined above should be ongoing during this interval.

.32 Actions After Federal Funding Approval.

a. Preparation of Damage Survey Reports. If the disaster damage has been determined to be eligible for Title 23, U.S.C. Section 125 funds, detailed Damage Assessment forms (DAF) are prepared to determine the amount and scope of reimbursement for both emergency and permanent restoration work. The DAFs are usually prepared by the assessment team that prepared the preliminary damage assessments. Because a significant amount of time may have elapsed since the disaster, the local agency may have to fund restoration costs while waiting for reimbursement. In many cases, the emergency work will already have been completed. Therefore, accurate and detailed records are required to verify the expenditures. For a sample DAF, see Appendix 33.59.

b. Preparation of Program Documents. The approved DAF serves as the basic justification and cost document. The DAF preparation is a joint effort by FHWA, WSDOT (TransAid), and local personnel. Each agency receives a copy of the DAF. Based on detailed DAFs received, WSDOT TransAid will prepare and forward a statewide ER program of projects to FHWA for approval. Following program approval by FHWA, WSDOT TransAid will request any additional information that is required to advance a specific project to the construction stage.

c. Funds Authorization, Billings, and Payment. WSDOT TransAid will process all the required data and submit it to FHWA for fund authorization.

All further action, including processing, billing, and payment, will be in accordance with Chapter 23 of this manual.

d. Overruns. If during the course of project development the costs exceed the amount on the DAFs, a request for additional funds must be submitted to FHWA through WSDOT TransAid. This request will consist of a revised estimate and its justification, a detailed explanation of the overrun, and a supplement to the Local Agency Agreement (Chapter 22).

e. Project Closure. Final vouchers, inspection, audit, and project closure are accomplished in accordance with Chapter 53 of this manual.

.33 Determination of Eligible and Ineligible Costs. FHWA policy regarding emergency relief procedures under the ER Program is outlined in the Emergency Relief Disaster Assistance Manual (Publication No. FHWA-HNG-12 dated January 1994). Following is the basic information from the federal publication:

a. General. Only certain items of repair or reconstruction of roads, streets, and bridges are eligible under the emergency relief program. The federal government will participate in costs when they are properly supported and documented and when such costs are directly attributable and properly allocable to emergency relief projects.

The Emergency Relief Program is intended to correct disaster damage to highways. The ER program does not provide emergency transportation services (e.g., ambulances, helicopters, etc.), compensation for material, equipment, or economic losses (e.g., stockpiled material, maintenance equipment, lost revenue, etc.), or reconstruction (replacement) of highways and highway projects as defined in Title 23, U.S.C.

The emergency conditions most frequently experienced are those resulting from damage to highways caused by storms which create flooding conditions. The processing of claims for damage by hurricanes, tidal waves, earthquakes, severe storms, landslides, volcanic eruptions, and other catastrophes will normally follow the criteria established for flood disasters.

b. Basic Criteria. Damages to be corrected must have resulted from the declared disaster or catastrophic failure.

Generally, that portion of a federal aid highway facility that is the maintenance responsibility of the applicant is eligible for repair or reconstruction. Any permanent work which is not eligible for participation as a part of a regular federal aid project is not eligible for emergency relief funds.

Work already scheduled for repairing or replacing deficient facilities which are damaged during a disaster will not be eligible for ER funds. This work should be funded as originally intended.

Damage outside the right-of-way is generally not eligible unless the agency can establish maintenance responsibility. When a disaster has caused damage that consists of heavy maintenance and work frequently performed by the department's maintenance forces, the work is not eligible.

Emergency relief funds may participate in the emergency repair or reconstruction of pavements or other surface courses, shoulders, embankments, cut slopes, natural and man-built drainage channels, including riprap, cribbing, or other bank control

features, guardrail, bridges, retaining walls, signs and traffic control devices, and culverts and similar structures. The clearing of debris and other deposits in drainage courses within the highway right-of-way and outside the right-of-way is eligible where the agency has the jurisdiction and responsibility for channel maintenance.

Landscaping and functional planting are eligible when associated with major damage restoration through permanent repair methods.

c. Emergency and Incidental Permanent Work. The intent of temporary operations, including emergency repairs, is to restore essential traffic which cannot wait for a finding of eligibility and programming of a project. Emergency repair work should be accomplished in a manner which will reduce additional work required for permanent repairs.

The FHWA Division Administrator's concurrence of the need for emergency work conveyed in the division's acknowledgement to the state's letter of intent does not authorize the agency to proceed with permanent restoration work on damaged highways unless the restoration is more economical or practical to perform as an associated part of the emergency operation. This incidental restoration can be performed with the emergency work provided it is properly covered in the damage inspection report. If such work has been accomplished prior to the site damage review, retroactive approval may be given when circumstances warrant.

There may be situations in which immediate completion of the permanent work is the most economical and feasible way to quickly restore essential traffic. An example would be a bridge and approaches being washed out, construction of a detour being both costly and time consuming, and the agency having precast concrete girders readily available that could be used at the site. In such a case immediate construction of the permanent structure and approaches could be accomplished at the discretion of the state or local agency, and approval by FHWA would be handled as emergency repair.

The use of ER funds for temporary repairs to roadways will normally be limited to the amount necessary to bring the washed-out fills and slip-outs back to grade with a gravel surface. However, in most cases these emergency repairs to roadways will not be constructed to true line and grade. They will usually follow the terrain and be constructed in the easiest and fastest manner. The repair to the road, nevertheless, should be good enough so that traffic can travel over it safely at a speed reasonable for the site conditions. Where routes handle heavy traffic, an appropriate type of bituminous surface as a temporary repair will be eligible for short sections of roadway.

The placement of the final high-type pavement is normally considered permanent repair. If done as emergency work, such paving must have prior FHWA concurrence to be eligible for Federal participation. FHWA will consider traffic characteristics, remoteness of the site, traffic control requirements, and socio-economic factors before approval.

d. Force Account/Contracts for Emergency Repairs. Work shall be undertaken by competitively bid contract where time permits. The FHWA may approve a waiver of the advertising requirement if such procedures are authorized by state or local law, and bids are solicited from a reasonable number of contractors or material supply companies, as applicable.

1. Force Account. Due to the emergency character of the work, state and local forces and/or negotiated equipment rental contracts may be used in handling a considerable portion of the emergency repairs.

   In accordance with federal aid policy guide 23 CFR 668A (December 9, 1991), a formal finding for force account work for emergency repairs is not required.

2. Solicited Contract. This is one type of contract which may be warranted due to the emergency character of the work in the solicited contract. Several contractors are contacted by telephone and asked to submit bids on equipment rental, labor, and materials. Unless emergency circumstances make it impossible or infeasible to do so, provisions of 23 U.S.C. 112(c) which require a sworn statement of noncollusion apply. Likewise, a summary must be prepared showing how the solicitation was done, who was contacted, and the responses by the contractors.

3. Negotiated Contracts. Negotiated contracts should only be used to facilitate prompt, essential emergency repairs. Two types of contracts are appropriate. The cost-plus-fixed-fee method is preferred. The contractor is paid for the costs of materials, equipment, labor, and overhead. In addition, the contractor will receive an amount agreed to at the negotiation stage.

   There may be situations where it is difficult to determine the extent of the work to be performed. In these cases, it may be appropriate to use a time-and-materials contract. The contractor is paid for the cost of materials and equipment. Specified hourly rates are negotiated including wages, overhead, and profit. All direct labor hours are paid at the negotiated rates. When this type of contract is used, the local agency should closely monitor the work to assure labor efficiency.

e. Permanent Repairs. Permanent restoration work will not be eligible if performed prior to program approval and authorization by the Federal Highway Administration, unless it has been determined more economical or practical to perform such work as an associated part of the emergency repairs. Documentation of this determination is essential.

Permanent repairs may involve one or more of the following categories of work:

1. Restoration-in-Kind. The ER program provides for repair and restoration of highway facilities to predisaster conditions. Restoration-in-kind is the expected predominate type of repair to be accomplished with Emergency Relief funds. Any additional features or changes in character from that of the predisaster facility are generally not eligible for ER funding unless they can be justified because of construction, economy, prevention of future recurring damage, or technical feasibility.

2. Replacement Facilities. Where a facility has been damaged to the extent that restoration to its predisaster condition is not technically or economically feasible, a replacement facility is appropriate. Replacement facilities should be constructed to current design standards. Emergency Relief participation in a replacement roadway will be limited to the costs of current design standards of comparable capacity (i.e., number of lanes) and character (i.e., surfacing type, access control, rural/urban section). Replacement of a bridge will be the cost of a new bridge to current design standards for the type and volume of traffic it will carry during its design life.

   Emergency relief participation may be prorated at the costs of a comparable facility when the proposed replacement project exceeds the capacity and character of the destroyed facility.

3. Betterments. A betterment is defined as any additional feature, upgrading or change in capacity, or character of the facility from its predisaster condition. Betterments are generally not eligible for Emergency Relief funding unless justified on the basis of economy, suitability and engineering feasibility, and reasonable assurance of preventing future similar damage. Betterments should be obvious and quickly justified without extensive public hearing, environmental, historical, right-of-way, or other encumbrances. The justification must weigh the costs of the betterment against the probability of future recurring eligible damage and repair costs.

   Upgrading that results from construction of replacement facilities to current standards as defined above is not considered a betterment insofar as the need for further justification. However, with respect to roadways, increases in capacity or a change in character of the facility would be considered betterments and are not justified for ER participation.

   Betterments which have been approved in the past with proper justification include:

   - Installation of riprap
   - Relocation
   - Increased waterway opening
   - Slope stabilization
   - Slide stabilization
   - Dike construction
   - Grade raises

   Betterments resulting from environmental or permit requirements beyond the control of the highway agency are eligible for ER funds if these betterments are normally required when the agency makes repairs of a similar nature in its own work.

   Raising of grades, relocations, or replacements with increased waterway openings must be properly justified. The reduction of a waterway by the deposit of a large alluvial fan in the vicinity of an undamaged bridge does not qualify the undamaged bridge for replacement. When an applicant proposes to increase the waterway opening by replacing the original closed abutment structure with an open-end abutment structure, the building of a new structure is of questionable economy.

   Minor relocations and alignment shifts are frequently advisable and are eligible for Emergency Relief participation. However, any design made to avoid damage which could be expected to occur infrequently is questionable. Added features of appropriate protection, such as slope stabilization, slope protection, and slide prevention measures wherever practicable, must have proper support. Slide stabilization work has been declared ineligible in problem areas where slides recur annually. The cost of monitoring slide stabilization measures after completion of the initial stabilization is not eligible. Emergency Relief participation in the initial construction does not create a continuing ER responsibility for future additional work.

Betterments which are eligible for reimbursement will be addressed, agreed to, and documented on the detailed damage assessment form.

4. Replacement-in-Kind. Where extensive damage has occurred, ER funds may be used for replacement-in-kind as the proper solution but with added features of appropriate highway or bridge protection. Where relocation is necessary, each case must be considered carefully to determine what part of the relocation is justified for construction with ER funds participation.

5. Wayside Areas. Wayside areas include rest areas and truck weighing stations. Access and parking facilities can be cleared and protected as part of an Emergency Relief project.

6. Replacement of Culverts. Upgrading culverts to current standards must be specifically related to eligible disaster damage repair. Damaged culverts are eligible for repair in kind. Destroyed culverts are eligible for replacement to current standards. Wholesale upgrading of deficient culverts on an area or route basis is not eligible.

7. Deficient Bridges. This includes bridges unsafe in structural condition only and does not consider waterway opening, functional obsolescence or serviceability. A structurally deficient bridge which was not under construction or scheduled for replacement with other federal funds may be eligible for ER. ER funds do not supplant other federal funds. The following represent two common situations:

   (a) Bridge is damaged and is repairable. Emergency Relief funds may participate in:

   - Reasonable emergency repair to restore travel.
   - Repair of disaster damage if bridge will be structurally safe upon completion of disaster damage repair (repair of disaster damage corrects structural deficiency).
   - Repair of disaster damage if other funds are used to simultaneously correct the structural deficiencies (repair of disaster damage will not correct structural deficiency).
   - No permanent repair if bridge is scheduled for replacement.

   (b) Bridge is destroyed or repair is not feasible. Emergency Relief funds may participate in:

   - Reasonable emergency repairs to restore traffic.
   - New comparable replacement structure if bridge was not scheduled for replacement.
   - No permanent repair if bridge is scheduled for replacement.

8. Bridge Betterments. Two common bridge betterment situations are:

   (a) Bridge is destroyed. A new comparable replacement structure would be eligible. Betterments are generally not a consideration except:

   - ER funds could participate to the extent of the cost of a comparable low water crossing or movable structure.
   - Extensive relocation of a replacement bridge is an ineligible betterment and ER participation will normally be limited to the cost of the structure and a reasonable approach length.
   - The replacement of low water crossings or movable bridges with high level structures is beyond the intent of a comparable facility and is an ineligible betterment.

   (b) Bridge is seriously damaged but repair is feasible. Repair-in-kind is eligible for ER funds.

   Added protection features such as riprap, spur dikes, or additional channel work if justified as a betterment would be eligible (i.e., there is reasonable assurance that similar future damage would be prevented and the cost of the betterment does not unreasonably exceed anticipated future ER costs).

   Control features for stream channels outside the highway right-of-way are generally not eligible. Work involved in channel changes, riprap, bank protection, clearance of debris and wreckage from the channels and stream beds, and other associated permanent work is not eligible unless it can be established that the public highway agency has jurisdiction and responsibility for the maintenance and proper operation of this section of the stream. Normally, projects associated with channel work (riprap, bank protection, etc.) that require right-of-way purchases and/or easements outside the right-of-way are not eligible. The fact that the agency responsible for channel maintenance does not have funds to finance the repair and protection work is not an acceptable reason for ER fund

assistance. In situations involving requests for participation in erosion control and bank protection outside the highway right-of-way, the following items must be verified by the highway agency to obtain eligibility:

- The work is directly related to protection of the highway facility.
- The work is not eligible for funds from another agency.
- No other agency has the responsibility for such work.
- The applicant agrees to accept the future maintenance of all work performed.

When work of this type is proposed, the project documents should include a letter from the local agency covering all four of the above features including acceptance of the responsibility for maintenance. Other supporting data should include copies of correspondence with the Corps of Engineers or other appropriate agency to verify that no other eligibility or responsibility exists.

- Increased bridge width or other geometric improvements and correction of nondisaster-related structural or surfacing improvements such as deteriorated pilings or decks are not eligible.

9. Protective Work. When permanent and emergency repairs cost considerably less than proposed protective measures such as riprap, eligibility of protective measures is questionable. For example, if repairs consisting of replacement-in-kind cost only $1,500 and the estimated cost to provide sufficient protection to prevent damage under similar unusual conditions is $9,000, participation beyond that necessary for replacement-in-kind would not be economically justified.

10. "Convenient" Damage. To eliminate a recurring annual maintenance problem based on the occurrence of a disaster is questionable. For instance, an applicant proposes to replace a damaged triple box culvert and roadway fill with a bridge. This is a betterment to alleviate an annual maintenance problem which was accelerated by a disaster. ER participation in the construction cost of a bridge is limited to the amount necessary to repair the triple box culvert.

11. Rock and Mud Slides. The removal of rock and mud slides is eligible. Such a slide, unless justified on their own as a catastrophic failure, must be associated with the overall natural disaster.

    When an old slide has been activated during a natural disaster, its correction to provide a safe roadway is eligible. Should the agency propose to relocate a road instead of correcting the old slide, the cost of the relocation to predisaster capacity and character may be eligible if justified as a betterment.

    Slide stabilization is also a betterment. Emergency Relief participation must be based on detailed analysis of the slide and on reasonable assurance of preventing similar future damage showing stabilization costs do not unreasonably exceed anticipated ER costs. Such analysis must include road relocation and do-nothing alternatives and consideration of previous testing recommendations for the area.

12. Plugged Culverts. Cleaning out plugged culverts is an eligible activity as long as it is considered beyond heavy maintenance and is associated with other eligible damage. Replacement of plugged culverts should be considered eligible only when justified as a betterment or when cleaning is not cost effective.

f. Design Standards. Reconstruction of damaged roadway and bridge facilities must be to adequate standards, including appropriate safety features. Reconstruction of extensively damaged facilities, including betterment projects when adequately justified, should be to the current design standards. Replacement of roadway facilities other than bridges is limited to the existing number of lanes and surface type. Bridges may be replaced with a facility which meets current geometric and construction standards required for the type and traffic volume which such facility will carry over its design life.

g. Environmental Impact Assessment. A categorical exclusion under 23 CFR 771.115(9), (13), and (14) is generally applicable to ER projects. This would apply to repair of the damaged roadway to predisaster conditions and requires the concurrence of the Division Administrator. If the finding cannot be made, the project is subject to an environmental assessment under provisions of 23 CFR 771.

    Emergency repairs during or immediately after a natural disaster are generally classified as categorical exclusions as are general permanent repairs if they are replacements in kind (see 23 CFR 771 and 40 CFR 1508.4).

    Extensive environmental processing could jeopardize an otherwise reasonable project by removing it from an eligible category under 23 U.S.C. 125. In other words, if a situation persists with no correction for an extended period of time, it may be unreasonable to

continue to classify it as a disaster-related emergency rather than a long-term need to be funded with regular federal aid.

h. Abbreviated Plans. The FHWA Division Administrator may approve the use of abbreviated plans provided that they provide essential information necessary to describe the work to be accomplished and determine the reasonableness of unit prices for contract or force account work.

i. Administrative Expenses.

1. Regular and Extra Employees. Regular salaries and overtime salaries and wages of all the regular applicants and extra employees directly engaged in work on Emergency Relief projects are eligible for reimbursement by the federal government. Timekeeping procedures should provide for allocating employees' time to projects and/or other activities each day on an hourly basis. The timekeeping document, such as a time slip, time and attendance report, or time book, is the source document which must be available for examination by audit personnel to support direct labor costs claimed on any ER project. The document should be signed by a responsible employee having knowledge that the time distribution is accurately reported.

2. Payroll Additives. Usually referred to as a labor surcharge, a set percentage over and above the total direct labor costs charged to a project is eligible for participation. This surcharge is to cover costs of various types of leave allowances, industrial accident insurance coverage, and other employee benefits. The allowable percentage rates will normally vary from year to year, from agency to agency. Therefore, the records used in developing percentage rates should be preserved under suitable control conditions to assure availability for examination when requested. The acceptable percentage rate may be applied only to direct labor costs.

3. Other Expenses. Expenditures for organization, maintenance, general administration, supervisory overhead, or other overhead of the SHA or political subdivision shall not be eligible for federal participation. However, personnel whose activities normally place them in an overhead category may be assigned to a specific project in an emergency. During such periods, their salaries would be eligible for federal participation, provided their time is documented on source documents with Emergency Relief projects.

33.4 Emergency Relief for Roads and Streets Not Eligible for Federal Aid

Roads/streets not eligible for federal aid may qualify for disaster relief funds under Public Law 93-288, as amended (Robert T. Stafford Disaster Relief and Emergency Assistance Act, Nov., 1988) which is the authorization for federal assistance to local or state governments, private-nonprofit organizations, and Indian tribes. The Federal Emergency Management Agency (FEMA) administers this program. Although neither FHWA nor WSDOT is involved in disaster relief project funding for non-federal aid roads/streets, this section has been included for informational purposes.

This PL93-288 program provides federal reimbursement of eligible costs to repair, restore, reconstruct, or replace damaged roadway facilities not on an eligible federal aid road/street. This includes emergency opening and permanent restoration.

Before funds are made available, the Governor must proclaim a state of emergency and request assistance from the President for assistance. The President must declare either an emergency or major disaster declaration.

The Disaster Recovery Manager (DRM) of the Federal Emergency Management Agency (FEMA) and Washington State's Governor's Authorized Representative (GAR) are responsible for determining program eligibility based on criteria established by the federal government. The GAR is responsible for Program administration.

.41 Applying for Federal Assistance.

a. Governor's Request for Federal Assistance. Based on the preliminary damage assessments, the Emergency Management (EM) prepares the Governor's request letters for the Governor's signature which is then submitted through FEMA to the President of the United States.

b. Presidential Declaration. If the President determines that the situation warrants federal assistance, he declares either an emergency or major disaster and invokes applicable sections of Public Law 93-288.

c. Federal/State Agreement. After the President makes the declaration of emergency, the Governor and FEMA Administrator sign a federal/state agreement for federal, state and local participation.

.42 Actions After Federal Funding Approval.

a. Preparation of Damage Survey Reports. EM and FEMA jointly establish disaster field offices (DFO) to coordinate federal and state response.

b. Applicant Briefings — Eligibility Determination. The Governor's Authorized Representative (GAR) and Federal Disaster Recovery Manager (DRM) will conduct applicant briefings. These briefings are for local elected officials, program administrators, and

accountants/bookkeepers. Local representatives are told what kind of assistance they will receive and the process to obtain the assistance. WSDOT (TransAid) will provide a representative at the briefing to discuss the ER program.

c. GAR and DRM Determination Review. In most cases, if not all, the GAR and DRM will review and determine eligibility of the damage survey reports (DSRs) in the disaster field office (DFO). Those DSRs not determined in the DFO will be followed up by the GAR and DRM at a later date.

d. State Requirements. The GAR will coordinate with fisheries and wildlife departments to review each project (DSR) and determine if a hydraulic permit approval is required.

e. Project Modifications. The applicant does the work, and if a time extension, scope, or fiscal modification is required, the applicant agent makes a request to the GAR for consideration.

f. Project Closure. When the work has been completed, the applicant agent submits a Statement of Documentation to the GAR. The GAR determines whether or not final inspections need to be conducted based on program guidelines. Projects will be audited as part of the Single Audit Act by the State Auditors Office. Once all the program requirements have been met and final payment made, the GAR will send a close-out letter to the applicant agent.

When the federal audit or review is completed, the FEMA Regional Office forwards the reimbursement request to the FEMA National Office.

The FEMA National Office forwards the final payment through EM, then closes out the project application.

33.5 Appendixes

33.51 Emergency Relief Program Flow Chart

33.52 Local Declaration of Emergency

33.53 Example Preliminary Damage Assessment Worksheet (EM Form 129)

DEM 130 Summary Damage

33.54 Letter of Intent

33.55 FHWA Acknowledgement of Letter of Intent

33.56 Governor's Proclamation of a State of Emergency

33.57 Sample Report Requesting Emergency Relief Funds

33.58 TransAid Notification to Local Agency of FHWA Finding of Eligibility

33.59 Example Detail Damage Assessment Form (EM Form 130)

12:LAG3A

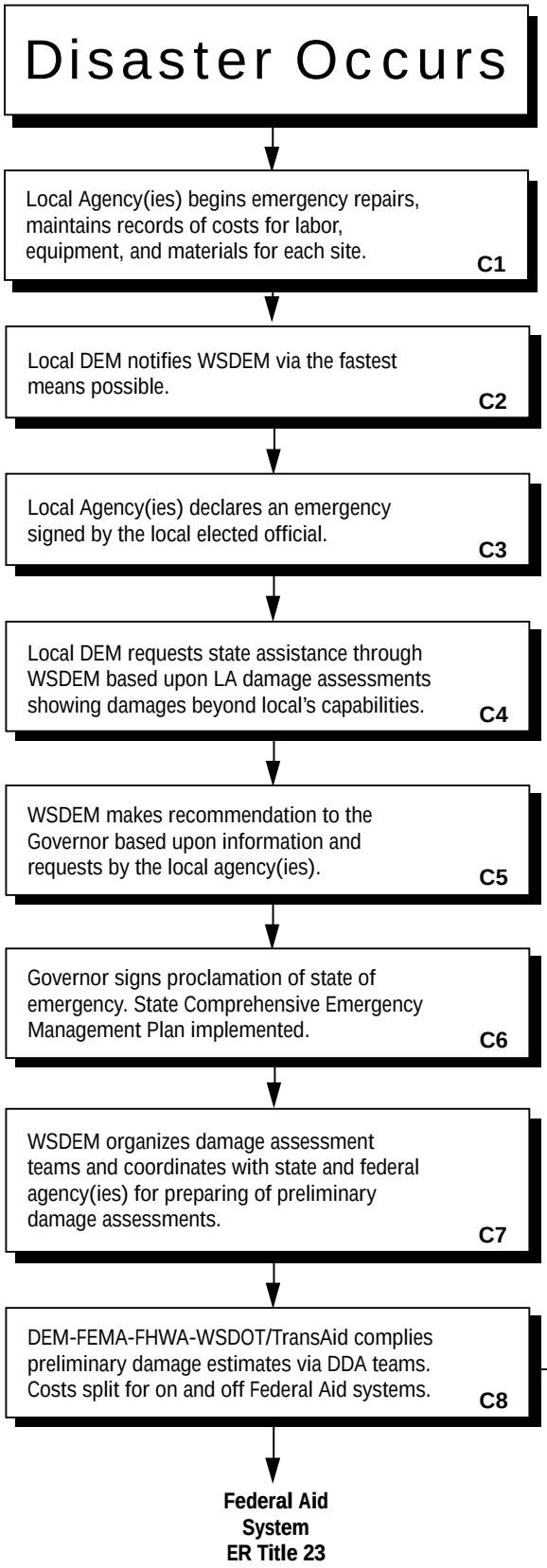

Legend

ER	Emergency Relief Program
PL	Disaster Relief Program (Public Law 93-288)
C	Combined Activity for ER and PL
FHWA	Federal Highway Administration
FEMA	Federal Emergency Management Agency
WSDOT	Washington State Department of Transportation
WSDEM or DEM	Washington State Department of Community Development/Division of Emergency Management
LA	Local Agency

ER Title 23

WSDOT-TransAid prepares letter of intent and sends to FHWA for action. **ER1**

FHWA acknowledges the letter of intent and establishes date if eligibility of ER funds are approved. **ER2**

WSDOT-TransAid advises local agency(ies) of FHWA's acknowledgment. **ER3**

WSDOT-TransAid requests Emergency Relief (ER) funds from FHWA and provides FHWA all of the information necessary for a field report including Governor's Proclamation. **ER4**

FHWA prepares a field report, the basis of requesting the approval of ER program. **ER5**

FHWA Administrator concurs in the field report and makes finding of ER fund eligibility. **ER6**

FHWA-Division notifies the state of the Administrator's action. **ER7**

WSDOT-TransAid notifies the effected local agencies. **ER8**

FHWA-WSDOT/TransAid-LA prepares detailed damage forms, the basis for setting up ER funds. **ER9**

ER 10

PL 93-288

WSDEM collates and prepares alternative recommendations to the Governor for requesting funds. **PL1**

Governor requests federal assistance through the regional FEMA office. **PL2**

FEMA office forwards request to the President with recommendations. **PL3**

President makes Presidential Declaration of Disaster. **PL4**

FEMA and Governor sign federal/state agreement. **PL5**

WSDEM and FEMA open a disaster field office and conduct briefings for applicants. **PL6**

WSDEM and FEMA set up DSR teams, conduct organizational meetings and briefings for teams. **PL7**

See WSDEM's *Disaster Assistance Manual* for details on FEMA projects.

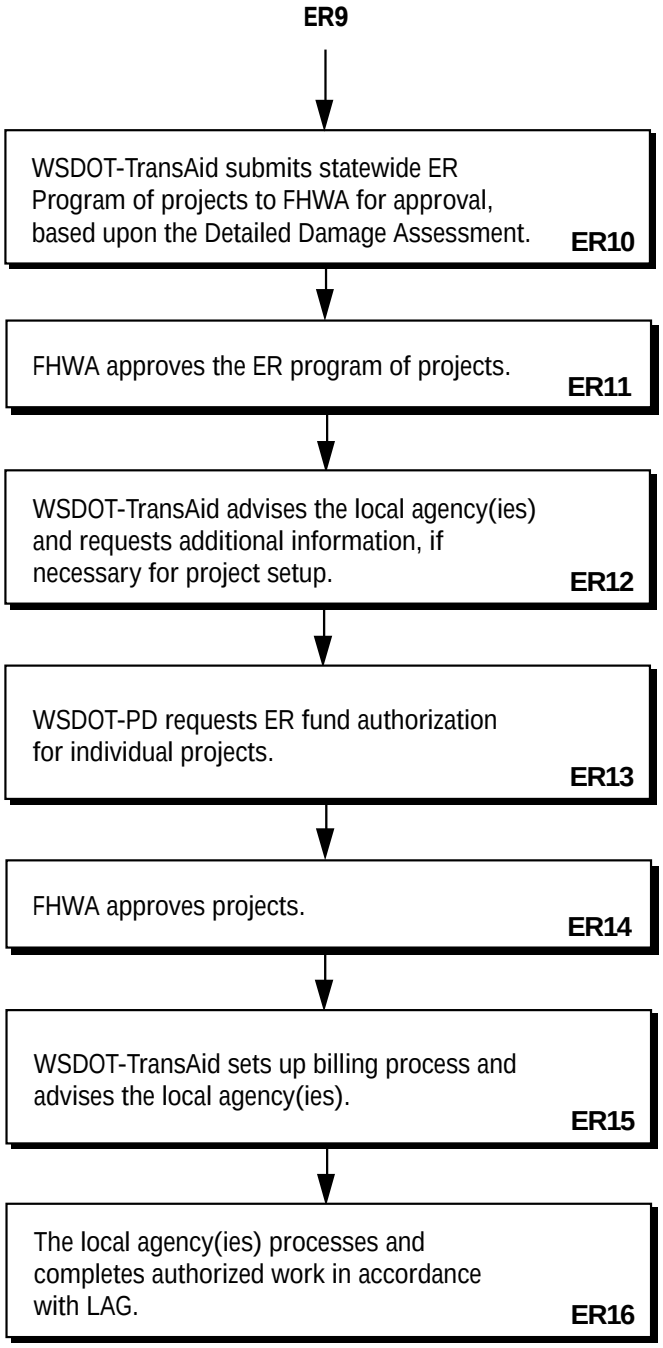
ER9
WSDOT-TransAid submits statewide ER Program of projects to FHWA for approval, based upon the Detailed Damage Assessment.
ER10
FHWA approves the ER program of projects.
ER11
WSDOT-TransAid advises the local agency(ies) and requests additional information, if necessary for project setup.
ER12
WSDOT-PD requests ER fund authorization for individual projects.
ER13
FHWA approves projects.
ER14
WSDOT-TransAid sets up billing process and advises the local agency(ies).
ER15
The local agency(ies) processes and completes authorized work in accordance with LAG.
ER16

SAMPLE

LOCAL AGENCY DECLARATION OF EMERGENCY

Date _____

WHEREAS, the _____ County Department of Community Development/ Division of Emergency Management has reported to the Board of County Commissioners, that beginning on _____, 19___, unusual weather conditions, consisting of heavy snowfall followed by rain, have caused a disaster by creating extensive flooding in parts of _____ County; and

WHEREAS, extensive damage has occurred and is still occurring to county roads and bridges, private roads, homes, businesses, and farmland; and

WHEREAS, persons and property are and will be damaged unless further efforts are taken to reduce the threat to life and property; and

WHEREAS, there is a present emergency which necessitates activation of the _____ County Disaster Preparedness Plan and utilization of emergency powers granted pursuant to RCW 36.40.180 and RCW 38.52.070(2), therefore

BE IT RESOLVED BY THE BOARD OF _____ COUNTY COMMISSIONERS:

SECTION 1

It is hereby declared that there is an emergency due to the flooding conditions in _____ County. Therefore, designated departments are authorized to enter into contracts and incur obligations necessary to combat such disaster, protect the health and safety of persons and property, and provide emergency assistance to the victims of such disaster.

SECTION 2

Each designated department is authorized to exercise the powers vested under Section 1 of this resolution in the light of the urgency of an extreme emergency situation without regard to time-consuming procedures and formalities prescribed by law (excepting mandatory constitutional requirements).

Board of County Commissioners

_____ County, Washington

Chairperson, _____

Commissioner, _____

Commissioner, _____

Note: Mailed to all county newspapers on above date.

cc: Washington State Emergency Management, re. notification by phone
Washington State Department of Transportation, Regional TransAid Engineer

Example Preliminary Damage Assessment Worksheet

PRELIMINARY DAMAGE ASSESSMENT WORKSHEET

DEM 129

COUNTY: _____ CATEGORY OF WORK: _____

PUBLIC AGENCY OR INDIAN TRIBE: _____ DATE: _____

THIS FORM SHOULD BE USED AS A WORKSHEET BY THE AFFECTED PUBLIC AGENCY OR INDIAN TRIBE TO COMPILE DAMAGE VALUES. **NOTE:** THE DAMAGES MUST BE COMPILED ON A CATEGORY - OF - WORK BASIS.

EMERGENCY WORK: CATEGORY A - DEBRIS CLEARANCE; B - PROTECTIVE MEASURES; PERMANENT WORK: C - ROAD SYSTEMS; D - WATER CONTROL FACILITIES; E - PUBLIC BUILDINGS AND EQUIPMENT; F - PUBLIC UTILITY SYSTEMS; G - PARKS AND OTHER.

1. PLEASE INDICATE TYPE OF ROAD SYSTEM (ON OR OFF) ON THE CATEGORY OF WORK LINE.
2. PLEASE TRANSFER TOTALS TO (FORM DEM 130) PRELIMINARY DAMAGE ASSESSMENT SUMMARY.
3. THE PRESIDENT DECLARES DISASTER AREAS (USUALLY) BY COUNTY, THE COORDINATION OF THE STATE/FEDERAL DAMAGE ASSESSMENT WILL BE THROUGH THE COUNTY EMERGENCY MANAGEMENT OFFICE. PLEASE PROVIDE COPIES TO THAT OFFICE **AS SOON AS POSSIBLE, TIME IS OF THE ESSENCE.**

TO BE COMPLETED BY PUBLIC AGENCY OR INDIAN TRIBE			TO BE COMPLETED BY STATE/FEDERAL TEAM	
BRIEF DESCRIPTION OF DAMAGE	LOCATION	ESTIMATED COST OF REPAIR	ESTIMATED COST OF REPAIR	COMMENTS

(Example)

Date _____

(Name) _____
Division Administrator
Federal Highway Administration
Olympia, WA 98507

Emergency Relief Funds

Dear _____:

The Washington State Department of Transportation intends to request Emergency Relief funds authorized under Sections 120 and 125 of Title 23, U.S. Code. These funds are to assist in financing repairs to the Washington State federal aid highway system necessitated by _____.

As you are aware, flooding occurred in several areas of the state and caused much damage to the federal aid system. An accurate estimate of the damage is not available at this time. Damage survey estimates will be prepared soon by the Federal Highway Administration, Washington State Department of Transportation, and the local agencies concerned.

We will submit an application for Emergency Relief funds as soon as possible.

The Governor's proclamation declaring a state of emergency is not yet available. A copy will be forwarded to your office when it is available.

Very truly yours,

Secretary of Transportation

cc: Deputy Secretary of Transportation
Assistant Secretary of Operations
Assistant Secretary of TransAid
Chief Maintenance Engineer
District Administrator
Program Management Engineer
Washington State Emergency Management

SAMPLE

FHWA ACKNOWLEDGEMENT OF LETTER OF INTENT

Date _____

Secretary of Transportation
Department of Transportation
Olympia, Washington 98504

Re: Emergency Relief Funds

Dear _____:

This is to acknowledge receipt of your letter of intent, dated _____, to request Emergency Relief Funds, authorized under Sections 120 and 125 of Title 23, U.S. Code, for the repair of damage to Federal-aid systems in _____ and _____ Counties resulting from the floods of _____.

Upon receipt of the Governor's official proclamation, you should proceed with performance of the emergency operations, including emergency repairs necessary on the Federal-aid highway systems to restore essential travel; to protect the remaining facilities; to reduce the extent of damage; to begin preliminary engineering consisting of surveys, design, and preparation of construction plans; to perform that permanent restoration work which is required as part of the emergency operations; and to use State forces and/or negotiated equipment-rental contracts as necessary to perform the work.

The eligibility of such work for ER Funds will be contingent upon a favorable finding by the Federal Highway Administrator on the eligibility of the disaster and subsequent approval of the work by FHWA.

The basis for the Administration's design will be a field report with estimates of cost to repair and reconstruct the damaged Federal-aid routes and evidence of the widespread extent and intensity of the disaster.

My office will be meeting with members of your staff to make arrangements for reviewing the disaster damage and preparing a field report and site damage reports.

If the Administrator concurs in the disaster finding, all emergency work must be included in an emergency program, and the program, when submitted for approval, shall include a detailed outline of the necessary emergency operations performed and a description of the permanent restoration work proposed. Permanent restoration work other than that performed as a part of the emergency operations shall not be performed prior to program approval and authorization by this office.

Sincerely yours,

Division Administrator

(Sample)

STATE OF WASHINGTON

PROCLAMATION BY THE GOVERNOR

WHEREAS, beginning on _____, rapid melting of a heavy snowpack, periods of freezing rain, and over three inches of rain in a short period of time caused a rapid build-up and surge of surface water in _____ County. This caused road washouts, mudslides, power outages, and flooding in homes, farms, and businesses throughout the county. The rain and flooding continue to cause further threat of damage.

WHEREAS, the severity of the destruction and damage are beyond the capabilities of _____ County, and subsequently, I find that a disaster affecting life, health, and property exists within the state of Washington.

NOW, THEREFORE, I, _____, Governor of the state of Washington, as a result of the aforementioned flooding and under the provisions of Chapter 43.06 RCW and RCW 38.52.050, do hereby proclaim that a State of Emergency exists in Washington State and that the Washington State Disaster Preparedness Plan be executed. The resources of the state of Washington are authorized to be employed to assist _____ County in a concerted effort to cope with the emergency. Additionally, the Department of Community Development/Division of Emergency Management is instructed to coordinate all state assistance in support of _____ County. The department is also instructed to determine if federal assistance is needed.

IN WITNESS WHEREOF, I have hereunto set my hand and caused the seal of the state of Washington to be affixed at Olympia.

_____

Governor of Washington

BY THE GOVERNOR:

_____

Secretary of State

OFFICE OF THE ENGINEER or PUBLIC WORKS DEPARTMENT
_____ COUNTY

Date _____

(Name) _____
Regional TransAid Engineer
Transportation Building, KF-01
Olympia, WA 98504-5201

Re: Request for Assistance
Flood Damage to _____
County Roads

Dear _____:

This letter is to request assistance, under provisions of Title 23, U.S.C., Section 125, through the Federal Highway Administration, for necessary repairs to the federal aid highway system in the form of emergency relief.

On _____, 19___, the Board of County Commissioners declared a State of Emergency in _____ County due to a major flooding condition on the _____ River. Heavy flooding continued through _____ causing a great deal of damage to public and private property throughout _____ County. Enclosed is a copy of the County Commissioners' Declaration of Emergency executed on _____, 19___.

Detailed estimates of the damage are being developed at this time. However, preliminary estimates indicate that the county road network suffered a loss in excess $_____ due to this flooding, of which $_____ covers damages to the federal aid system. The Board of County Commissioners has requested, through the State of Washington Department of Community Development/Division of Emergency Management, that the Governor issue a disaster declaration on behalf of _____ County and render all required and available assistance, including a request to the President of the United States to declare the Washington counties affected by the massive flooding a National Disaster.

_____ County is not in a position to adequately fund such restoration without substantial adverse impact to the remainder of the County. _____ County has endeavored to maintain its entire road system, including the federal aid routes, at a level of service which provides a safe and efficient transportation system for the motoring public.

Attached is the following pertinent information:

(1) Disaster impact and damage assessment.
(2) Estimated damages on county roads (on and off federal aid system).
(3) The County's Annual Maintenance and Construction Budget.
(4) A County map showing the location and limits of the damaged areas.
(5) Storm data of the region.
(6) Photos of damaged areas.
(7) Newspaper articles.

Thank you for your attention to this request. We look forward to your early response.

Sincerely,

Director of Public Works
or County Engineer

Enclosures

TransAid Notification to Local Agency of FHWA Finding of Eligibility

(Example)

Date

Agency

Emergency Relief

Dear :

The Federal Highway Administration (FHWA) has determined that costs for repairing the federal aid system roads damaged by the _____, in _____ counties, are eligible for ER funds.

The federal share of eligible costs will be 100 percent for emergency repair accomplished in the first 180 days after _____. The federal share for permanent repairs and all eligible work accomplished after the first 180 days will be based on the pro-rata share for the federal aid system damaged.

In accordance with federal regulations, the next step consists of the program preparation. This is accomplished by the preparation of a Detailed Damage Assessment Report. The Regional TransAid Engineer, along with the FHWA Area Engineer will be contacting your office very soon to schedule site visits to prepare detailed cost estimates for the individual damaged sites.

Following completion of the detailed damage assessments, TransAid, in coordination with FHWA, will set up the program and funding for eligible work. Reimbursement for work accomplished will be in accordance with the *Local Agency Guidelines*.

Sincerely,

Regional TransAid Engineer

:kmp
TP/samer
Enclosure

cc: Regional TransAid Engineer

(aid) DETAIL USDOT FEDERAL HIGHWAY ADMINISTRATION - REGION 10
DAMAGE ASSESSMENT FORM (Title 23, Federal-aid System)

Report No. _____
Sheet No. _____ of _____
Disaster No. _____

Applicant: County: Insp. Date

Location of Damage (Name of Road and Milepost) Fed-aid Route

Description of Damage

Cost Estimate (including Construction Engineering)

	Quantity	Unit	Description of Work to Date (Equipment, Labor, and Materials)	Unit Price	Cost
Emergency Repair Complete					
	Method of Work: Local Forces ☐ State Forces ☐		Emergency Contract ☐	Total Emergency Repair Complete	$
Emerg. Repair Remain.					
	Method of Work: Local Forces ☐ State Forces ☐		Emergency Contract ☐	Total Emergency Repair Remaining	$
Permanent Restoration					
				Estimated Preliminary Engineering	$
	Method of Work: Local Forces ☐ State Forces ☐		Permanent Repair Contract ☐	Total Permanent Restoration	$

Environmental Assessment Recommendation ☐ Not Required ☐ Major Action ☐ Nonmajor Action	Right-of-Way	$
	TOTAL ESTIMATED COST	$
Recommendation ☐ Eligible ☐ Ineligible	FHWA Engineer	Date
Concurrence ☐ Yes ☐ No	State Engineer	Date
Concurrence ☐ Yes ☐ No	Local Agency Representative	Date

34.1 General Discussion

The TransAid Service Center of the Washington State Department of Transportation (WSDOT) and local agencies have developed a bridge replacement selection process for selecting and prioritizing bridges to be replaced with Highway Bridge Replacement and Rehabilitation Program (HBRRP) funding.

Section 34.2 of this chapter describes each step in the bridge selection replacement process. Section 34.3 describes the roles, purpose, and membership of the committees and organizations integral to that process: the WSDOT Bridge Preservation Section, the Bridge Replacement Advisory Technical Committee, and the Bridge Replacement Advisory Committee (BRAC). Section 34.4 outlines alternative procedures for defining the scope of bridge projects.

34.2 Bridge Selection

.21 Procedures. Following are the steps involved in selecting bridges for replacement.

a. Bridge Sufficiency Ratings. The Federal Highway Administration (FHWA) calculates sufficiency ratings for every bridge in the nation. This rating is computer-calculated and is based on inventory and inspection data submitted by state and local agency bridge inspectors. The sufficiency rating formula is based on three factors: structural adequacy and safety, serviceability and functional obsolescence, and essentiality for public use. Ratings can range from 0 (worst) to 100 (best).

b. Funding Allocations. The FHWA annually allocates need-based federal HBRRP funds to each state. In Washington, currently 50 percent of the funds allocated to the state are reserved for local agency bridge replacement projects. Current federal requirements state that 15 to 35 percent of a state's allocation be spent off the federal aid system. WSDOT has no off-system bridges; thus, those percentages convert to a 30 to 70 percent portion of bridge funds to local agencies which must be spent off-system. Historically, 40 to 45 percent of local funds have been spent for off-system bridge replacement in Washington.

c. Funding Eligibility. A structurally deficient or functionally obsolete bridge with a sufficiency rating less than 50 is eligible for federal replacement funding. A structurally deficient or functionally obsolete bridge with a sufficiency rating less than 80 is eligible for federal rehabilitation funding. Projects under the $10 million estimate will be matched at a ratio of 80 percent FHWA and 20 percent local. Bridges estimated to cost over $10 million will require a funding proposal from the agency. This proposal will address the financing, ability to match at a ratio of 50 percent FHWA and 50 percent local for that portion over $10 million, and the proposed timing of fund expenditures.

Appendix 6A of the *Local Agency Bridge Inspection Manual* further explains sufficiency ratings and outlines criteria for structural deficiency and functional obsolescence.

d. Bridge Replacement Candidates. The WSDOT TransAid Bridge Engineer, in conjunction with WSDOT Bridge Preservation Section engineers, develops a pool of bridge replacement candidates. The pool is developed, starting with bridges having the lowest sufficiency ratings, followed by candidates with higher ratings until the estimated replacement costs are at least double the anticipated allocation for local agency bridges.

e. Local Agency Notification. Local agencies are notified through the WSDOT Regional TransAid Office that one or more of their bridges is being considered for replacement funding. The local agency is asked to provide input regarding its ability to provide matching funds, the appropriate scope of work, its interest in the project, current estimated costs, and other pertinent details.

f. Field Evaluation of Bridges. The WSDOT Bridge Preservation Section evaluates bridges in the replacement list and, if appropriate, calculates independent sufficiency ratings. This is done to normalize any differences which might occur in assigning ratings; the same inspectors rate all the replacement candidates.

g. BRAC Technical Committee Review. The BRAC Technical Committee reviews each bridge under consideration as a suitable candidate for funding and, when necessary, reconciles any major differences between sufficiency ratings as calculated by the local agency and by the Bridge Preservation Section. The Technical Committee also reviews and comments on rating criteria. The Committee recommends a bridge as a good, fair, or poor candidate for replacement based on capacity, bridge and approach geometrics, condition, and hydraulics.

h. BRAC Committee Selection Process. BRAC Technical Committee recommendations, including information from the local agency and WSDOT, are reviewed by BRAC. From this review, BRAC recommends bridges for funding to the Assistant Secretary for TransAid. Selected bridge candidates are presented to BRAC in one of two categories (on

or off the federal aid system) ranked by their sufficiency rating. The Committee discusses the merits of each candidate and bridges are selected until the estimated replacement cost of the candidates equals available funding. There is typically a two- to three-year time lag between a bridge's selection for replacement and actual construction; thus, future project costs are based upon an estimate of **anticipated** federal funds.

For each bridge presented, the Committee then recommends to the Assistant Secretary for TransAid that the bridge should be funded for replacement or rehabilitation based on the results of a C3R Review or project should not be funded at this time.

Bridges which are not selected for replacement funding fall into two categories: (1) Viable replacement candidates which BRAC has not selected for funding during the current year; the agency may resubmit these bridges for funding consideration at a subsequent meeting. (2) Bridges which are not appropriate replacement candidates under HBRRP funding. Although these bridges are also reviewed annually by BRAC, they are not presented as replacement candidates at future BRAC meetings.

i. Selection of Bridge Replacement Candidates. After a C3R review and consideration of BRAC recommendations, the Assistant Secretary for TransAid selects the bridges to receive HBRRP funding. Local agencies are notified, by letter, of any bridges chosen within their jurisdiction, and are asked to submit their request for funding approval through their Regional TransAid Engineer.

34.3 Bridge Replacement Committees

The primary committee specifically set up to facilitate selection of local agency bridges for replacement or rehabilitation is BRAC. The BRAC Technical Committee is a BRAC subcommittee, consisting of three members appointed by BRAC. Working extensively with these Committees in the selection process is WSDOT. The role, purpose, and membership of these entities is outlined here:

.31 The WSDOT Bridge Preservation Section. Bridges with sufficiency ratings identifying them as candidates for replacement are evaluated by a team from the Bridge Preservation Section, a section within the WSDOT Bridge and Structures Office. The team performs a field inspection the first year a bridge is eligible for consideration, then reinspects it at least once every three years thereafter until it is either selected for replacement or until a decision is made not to fund it . Inspection by a single team maintains uniformity in applying rating standards.

.32 The BRAC Technical Committee. This Committee reviews all bridge replacement candidates and reconciles any differences between the bridge sufficiency rating as originally calculated by the owner agency and the independent rating calculated by the Bridge Preservation Section. The bridges are then ranked by the revised sufficiency rating. When their review is complete, the Technical Committee recommends a bridge's appropriateness for replacement (poor, fair, or good), to BRAC. The Technical Committee consists of three engineers appointed by BRAC: one each from a city, a county, and the state; all must be engineers with extensive bridge maintenance and rehabilitation experience. The TransAid Bridge Engineer also provides input and answers questions.

.33 The Bridge Replacement Advisory Committee. BRAC reviews local agency bridge replacement candidates ranked by sufficiency rating, and recommends candidates for funding. BRAC usually meets twice a year (Spring and Fall). It consists of nine voting members: three state engineers, one each from WSDOT's TransAid, Bridge and Structures, and Program Development divisions; three county engineers appointed by the Washington State Association of County Engineers; and, three city engineers appointed by the Association of Washington Cities. Each city and county member initially serves one year as an alternate, then serves for a full, three-year term. One new city and county member is recommended for appointment each year. The Deputy Assistant Secretary for TransAid is the designated BRAC Chair.

34.4 Bridge Scoping

.41 The C3R Review — Definition/Purpose. The C3R Review is a process which provides a means for reviewing four possible solutions to a deficient bridge problem: closure, repair, rehabilitation, or replacement (C3R). The C3R process is intended to find the most cost effective scope of work and to identify any deviations from the standards that are warranted under the circumstances.

a. The C3R Review Team. This team consists of a bridge owner representative who has the authority to commit to any design deviations; the TransAid Operations Engineer as team leader; the TransAid Bridge Engineer; the Regional TransAid Engineer; and any others as appropriate. Team members conduct on-site reviews of structures recommended for a C3R Review.

b. Review Procedures. The steps involved in a C3R Review are:

1. Determining the Need for a C3R Field Review. This is generally done by BRAC, based upon recommendations of the Technical Committee and on-site inspection data gathered by the Bridge Preservation Section.

   BRAC's policy requires a C3R on each project unless waived by the C3R team.

   Outside of BRAC, a request for a C3R Review may be made by the TransAid Service Center, the FHWA, or by the local agency through the Regional TransAid Office.

2. Field Review at the Bridge Site. Once the need for a C3R Field Review is confirmed, an on-site review of the bridge is done by the C3R Review team. The team member representing the bridge owner provides the local agency's recommendations for correcting deficiencies and has the authority to approve geometric design deviations. The four possible review options are thoroughly discussed during this field review. Any appropriate alternative solutions are also considered. The TransAid Operations Engineer has authority to approve design deviations agreed to by the team during the field review. (Appendix 34.61 is the form used in C3R Reviews).

   If consensus is reached on the appropriate level and scope of the work, the Assistant Secretary for TransAid confirms, by letter to the local agency, what course of action has been chosen.

   In addition to the options available within the C3R process, the team may also recommend a Value Engineering (VE) study, a city or county design report (if appropriate) or a Type, Size, and Location (TS&L) Study and report. The TransAid Bridge Engineer provide guidance and direction for completion of these reports and studies.

3. The Design Report. A local agency may be asked to prepare a detailed Design Report if an appropriate course of action cannot be determined by the C3R team, or if more information about the appropriate scope of work is required. Information to be included in the report will be defined, in writing, by the C3R team. Bridge replacement funds are authorized for use in preparing a requested report.

4. Final Review of Design Report and Project Scoping. The completed Design Report is received and studied by the C3R team, which may meet again to discuss the most appropriate course of action. If any additional information is needed, the team will request it. When the review is concluded and a decision reached, the Assistant Secretary for TransAid will write to the local agency confirming the decision, and if appropriate, authorize work to begin.

   The FHWA may require a Type, Size, and Location Study for major bridges. A value engineering study may also be needed to develop the scope of the project.

.42 Type, Size, and Location Study for Major Structures. For bridge replacement projects estimated to cost $5 million or more, or for replacement with a "unique" site condition, the FHWA may require a local agency to conduct a TS&L Study. Factors constituting a "unique" site condition are defined by the FHWA as:

- difficult or unique foundation problems,
- new foundation types,
- new or complex designs involving unique design or operational features,
- longer than normal spans,
- bridges for which the design procedures depart from current acceptable practice.

If the proper scope of the project cannot be determined by a field C3R review, the C3R team may require a TS&L Study before determining the proper scope of the project.

.43 Value Engineering Study. C3R Review findings may lead to a recommendation for a value engineering study. A VE study may be requested at any time during the design phase, if appropriate.

34.5 Bridge Funding

The HBRRP provides federal funds to cities and counties for bridges that are deficient because of structural deficiencies, physical deterioration, or functional obsolescence.

Section 12.33 has a list of items defined as bridge work. This list can be used to determine the bridge and approach work percentages when requesting bridge funding. BRAC policy sets a limit of 15 percent for approach costs. Any participation beyond this amount must be approved by the Assistant Secretary for TransAid, based upon unique circumstances.

34.6 Appendixes

34.61 Sample C3R Review Form

22:P:LAG3B

Washington State Department of Transportation

TransAid Division

C3R Field Review Report

Date

Structure Ident.:
Agency:
Bridge Name:
Bridge Number:
Features Intersected:
Features Carried:
ADT: Year:
Year Built: Detour:

Existing Bridge Characteristics

Structure Type:
Number of Spans:
Total Length:
Max Span Length:
Curb - Curb Width:
Alignment

Present at Field Review

HQ TransAid
- ☐ Kevin Dayton
- ☐ Dave Mounts
- ☐ John Dorffeld

Regional TransAid

Agency

C3R Consensus for New Bridge

Structure Type:
Number of Spans:
Total Length:
Max Span Length:
Curb - Curb Width:
Alignment

Cost

Bridge:
Total Project:

Field Review Decisions and Comments:

Approved By: _____ Date: _____
TransAid Operations Engineer

Agreed To: _____
Authorized Local Agency Representative

Paragraph to Include in Letter to Agency:

Office Review Comments:

Contents

GUIDELINE SECTIONS

Guidelines Overview

- 11 Introduction
- 12 FHWA Funding Programs
- 13 Becoming Certified to Administer FHWA Projects
- 14 Developing Projects Using the Local Agency Guidelines

General Project Development
(Applicable to All Projects)

- 21 The Project Prospectus
- 22 The Local Agency Agreement
- 23 Progress Billings
- 24 Environmental Processes
- 25 Right-of-Way Procedures
- 26 Disadvantaged Business Enterprises
- 27 Equal Employment Opportunity and Training

Special Project Development
(Applicable to Some Projects)

- 31 Using Consultants
- 32 Railroad/Highway Crossing Program
- 33 Emergency Relief Program
- 34 Bridge Selection and Scoping

Design

- 41 General
- 42 Design Standards
- 43 Location and Design Approval
- 44 Plans, Specifications, and Estimates
- 45 State Advertising and Award Procedures
- 46 Local Advertising and Award Procedures

Construction and Post-Construction

- 51 WSDOT Administered Projects
- 52 Local Administered Projects
- 53 Project Closure

Miscellaneous

- 61 Local Agency Force Projects
- 62 Enhancement Projects
- 63 NHS Projects
- 64 Bridge Inspections
- 65 Management Systems

List of Forms

Acronyms/Glossary of Terms

Index

41.1 General Discussion

This chapter covers the design phase of projects on non-NHS routes, Federal Highway Administration (FHWA) funded projects, and discusses a delegation of authority by the FHWA to the Washington State Department of Transportation (WSDOT) TransAid Service Center in administration of FHWA funds.

This part of the manual is organized into six chapters relating to the design phase of FHWA projects — General; Design Standards; Location and Design Approval; Plans, Specifications, and Estimates; State Advertising and Award Procedures; and Local Advertising and Award Procedures.

The approving agency identified for the various phases of work is illustrated in the following matrix.

	Action	LA non-NHS CA	LA non-NHS non-CA Agency
a.	PE Fund Auth. and Modif.	F	F
b.	Exceptions to Design Stan.	S	S
c.	Design App. (inc. prelim. and adv. detail br. plan app.)	L	S
d.	Experimental Work Plans	F	F
e.	PS&E Approval	L	S
f.	State furnished mat., cost-effective determination	L	S
g.	Prop item, pub. int. find.	L	S
h.	Concurrence in Award	L	S
i.	Buy America Exemption	F	F
j.	Tied Bids	L	S
k.	State Forces Work	L	S

F = FHWA
S = WSDOT-TransAid
L = Local Agency

Different standards apply to the design of new construction, 3-R (resurfacing, restoration, and rehabilitation), 2-R (resurfacing and restoration) and low volume streets and roads projects. Each of these terms is defined in Section 41.3. Local agencies should determine which standards apply before beginning design. New construction standards and standards for 2-R projects, 3-R projects, and low volume streets and roads are given later in this chapter.

FHWA funds are also available for bridges on routes other than the FHWA system. Different standards are applicable to new or reconstructed bridges on these "off-system" roads. These standards are described in Chapter 42.

It is strongly encouraged that value engineering be used, as needed, throughout project development, construction, operation, and maintenance. Value engineering analysis should be performed on projects where its employment has a high potential for public benefit.

Value engineering should be considered on high cost and major projects. The need for value engineering should be determined on a project-by-project basis (see Chapter 43).

Design and construction standards for enhancement projects are outlined and defined in Chapter 62.

Federal law and the FHWA metric conversion plan requires all contracts to be in metric units that are advertised for bid after October 1, 2000.

Environmental documents and right-of-way plans shall be in dual units in the interim unless a hardship approval is granted by FHWA.

41.2 New Construction/Reconstruction Projects (refer to Chapter 42 for standards)

.21 A reconstruction project is designed to meet the minimum design standards for new construction for the functional class. Reconstruction includes significant changes in cross-section or shifts in both vertical and horizontal alignment. If 50 percent or more of the project length involves vertical or horizontal alignment changes, the project will be considered reconstruction. Reconstruction may require acquisition of additional right-of-way, and may include all items of work usually associated with new construction, including items a. through n. below.

a. Pavement Type Determination. The determination of pavement type is of major importance in the development of plans for any urban street and road paving improvement. The main factors to be considered in determination of pavement type are outlined in Section 520 of the WSDOT *Design Manual.*

The local agency should have on file documentation of factors considered in determining that the pavement to be used has been carefully selected in terms of engineering, economics, and current design standards. The pavement analysis should identify the design life, lifecycle costs, and impacts of the various alternatives on the total project.

The design live loading for urban streets and roads shall not be less than the current state of Washington maximum legal load, unless other analysis recommends less.

The WSDOT Materials Laboratory will provide design guidance if requested by the local agency through the Regional TransAid Engineer.

b. Structural Design. Design procedures shall conform to accepted engineering practices approved by a registered professional engineer. Bridge deck protection is required for all FHWA funded bridge construction. The recommended protective systems are outlined in the WSDOT *Bridge Design Manual*.

c. Roadway Geometrics. Design(s) shall be based upon accepted engineering practices and the requirements listed in this manual.

d. Construction Specifications. All FHWA projects, including local agency force projects, shall be constructed in conformance with the current edition of the WSDOT/ APWA *Standard Specifications for Road, Bridge, and Municipal Construction* (as outlined in Section 44.4).

e. Traffic Control. All traffic control devices shall conform to the MUTCD, as adopted and modified by the Secretary of Transportation, per RCW 47.36.030.

f. Clear Zone. The clear zone is the roadside border area starting at the edge of the traveled lane that is available for safe use by errant vehicles.

The clear zone distance tables in the WSDOT *Design Manual* and Appendix 42.31 provide criteria for establishing clear zone distances.

g. Geometric Cross-Section. It is desirable that all new construction provide embankment slopes and ditch inslopes of 4:1 or flatter. Embankment slopes of 3:1 or steeper may be used when achieving flatter slopes has demonstrated to be impractical.

h. Vertical Clearance. Vertical clearance above the paved roadway surface shall be a minimum of 5 meters (16.5 feet). Vertical clearance of structures above the walkway surface shall be a minimum of 2.44 m (8 feet).

i. Bridge Approach Railings. Approach guardrail is required at all bridge ends and shall be made structurally continuous with the bridge railing.

A guardrail layout has been developed for use when an intersecting roadway or private approach exists within the limit of the standard bridge approach guardrail. See Standard Plan C-2f in the WSDOT/ APWA *Standard Plans for Road, Bridge, and Municipal Construction.* This standard plan should be used only when it is not feasible to relocate the intersecting roadway or private approach.

j. Bridge Railings. Only bridge rail designs that have been successfully crash tested (or their equivalents) shall be used on federally funded new construction or reconstruction projects. The WSDOT *Bridge Design Manual* (M 23-50) contains guidelines and performance levels for bridge railing along with examples of bridge rail designs that have been crash tested. (Refer to Section 8.3 of the *Bridge Design Manual*.)

k. Illumination.

1. Consider roadway illumination for high activity pedestrian areas (bus stops, crosswalks, etc.).
2. Consider low energy consumption designs.

l. Pedestrian Facilities. In urban areas, sidewalks are desirable on both sides of the street. Clear sidewalk width shall be at least 1.22 m (4 feet).

m. Bicycle Facilities. On streets and roads intended to accommodate designated bicycle routes, the WSDOT *Design Manual* (M 22-01) chapter on bicycle facilities should be used as a design guideline per RCW 47.26.310(2).

n. Ramps for the Handicapped. Ramps shall be included in all walkways and/or curb construction per RCW 35.68.075. The ramps shall meet the minimum design requirements of the Americans with Disabilities Act. These standards are outlined in the June 30, 1994 Federal Register.

o. Drainage and Hydraulic Design. Refer to WSDOT *Hydraulics Manual* and Local Agency Requirements.

41.3 3-R Projects (Resurfacing, Restoration, and Rehabilitation) (refer to Chapter 42 for standards)

.31 Safety Improvements. A safety improvement evaluation (see Appendix 41.71 for guidance) must be an integral part of all projects and could include:

- Upgrading existing substandard roadway design elements — roadway design elements are the physical characteristics of the highway, such as alignment, grades, widths, sight distance, clearances, bridges, and the pavement structure including surface texture.
- Improving existing operational features — operational features include traffic control devices, lighting, and pedestrian accommodations that provide for the safe and efficient movement of vehicles and pedestrians.
- Reducing the potential hazard of existing roadside features — roadside features include sideslopes, ditches, drainage facilities, barrier systems, sign supports, luminaires, trees, utility poles, and other features adjacent to the roadway.
- Upgrading bridge safety features — on all projects which include structures with deficient safety features, consideration must be given to correcting the deficient features. Bridge rails, approach rails, connections, and terminals are considered bridge safety features.

.32 Superelevation. In order to provide the same degree of safety and comfort on 3-R projects as on any other project, superelevation, including transitions, should be provided.

Rebuilding horizontal curves to larger radii and appropriate superelevation should always be considered, especially when accident data indicate that a problem exists.

Urban arterial streets and roads should be superelevated the same as rural roadways, within the constraints imposed by adjacent development, curbs, sidewalks, weather, and other conditions.

.33 Pavement. Pavement design should use the minimum depth practical to achieve a structural section capable of carrying projected loads over the design period. A pavement design should also use a surface that provides and retains adequate skid resistance. Refer to Appendix 42.31 for design information.

.34 Geometric Cross-Section. Foreslopes (fill slopes and ditch inslopes) and cut slopes may be affected as a result of proposed work on the roadway and shoulder surfaces. Refer to Appendix 42.31 for standards.

.35 Alignment. Alignment improvements should be undertaken in cases where the number of accidents has been high and where previously installed warning signs, markings, or other devices have not proven effective.

.36 Curvature. If the calculated design speed for a particular horizontal or vertical curve is less than 24 km/h (15 mph) below the designated speed limit of the adjacent sections, and the location is not an identified high accident location, proper signs and markings informing drivers of the condition may be used in lieu of reconstruction to meet standards for the assumed design speed. When the difference is 24 km/h (15 mph) or more, or when the design speed of the horizontal or vertical curve is less than 32 km/h (20 mph), corrective action should be undertaken. If improvement is not practicable, additional signs and markings and other provisions must be used to provide for proper speed transition.

Sight distance on horizontal curves and at intersections can often be improved by minor cut slope flattening or selective clearing or both.

.37 Grades. Grades generally do not need to be flattened on 3-R projects. Steep grades and restricted horizontal or vertical curvature in combination, however, may warrant investigation.

.38 Clear Zone. For safety, it is desirable to provide a roadside recovery area that is as wide as practical. But since 3-R projects are constrained by topographic features and right-of-way, considerable judgment must be used. The clear zone must be given particular attention at identified high roadside accident locations (fixed object accidents). An adequate clear zone at some horizontal curves, especially those at the end of a downgrade, should be provided if practicable. See the following chapter (Chapter 42) for applicable standards.

41.4 2-R Projects (Resurfacing and Restoration)

Refer to Section 41.3 and the following chapter (Chapter 42) for standards.

41.5 Low Volume Roads and Streets

Refer to Chapter 42 for standards. These roads and streets have volumes less than 400 ADT and have separately developed standards.

41.6 Deviations

.61 General. Deviations from the standards in Chapter 42 will be submitted to the Regional TransAid Engineer and will be transmitted to the Assistant Secretary for TransAid for approval or denial.

The CA Agency is authorized to design projects to the standards provided in Chapter 42, following the warrants and qualifying statements given. In the event all minimum recommendations cannot be incorporated into the design, the agency shall submit the deviation for review and approval by TransAid.

.62 Documentation. A local agency shall document their reasons for deviation from these standards. The deviation should include a description of the problem and its proposed solution, a vicinity map in sufficient detail to aid in evaluating the problem, and any other information which may be helpful as a future reference. This shall be documented prior to the agency's completion of PS&E documents.

.63 Format. Appendix 41.72 is a Sample Deviation Analysis Format sheet. The sample is intended to present format only.

41.7 Appendixes

41.71 Safety Checklist — A Guideline for 2-R and 3-R Projects

41.72 Sample Deviation Analysis Format

2:P:LAG4

Project _____ _____
Number Title

_____
Local Agency

The proposed project should be given a roadside hazard inventory to determine if the following elements exist within the project termini and if the scope of the project includes construction, elimination, modification, or protection of these elements:

Drainage Structures

Existing: _____ Proposed: _____

Project includes mitering end sections: Yes: _____ No: _____

Comments: _____

_____

Guardrail (Reviewed for Adequacy)

Comments: _____

_____

Signs, Signals, and Illumination Supports

Existing: _____ Proposed: _____

Breakaway bases proposed: Yes: _____ No: _____

Comments: _____

_____

Bridge Piers/Abutments

Protection Existing: _____ Protection Proposed: _____

Comments: _____

_____

Clear Zone (Reviewed for Adequacy)

Roadside Obstacles:

Trees:

Utility Poles:

Ditch Cross-Sections:

Protection Proposed: _____

_____

Comments: _____

_____

Horizontal Alignment (Reviewed for Adequacy)

Comments: _____

_____

Vertical Alignment (Reviewed for Adequacy)

Comments: _____

_____

Roadway Widths (Reviewed for Adequacy)

Comments: _____

_____

Sight Distance (Reviewed for Adequacy)

Comments: _____

_____

Pavement Structure (Reviewed for Adequacy)

Comments: _____

_____

Traffic Control Devices

Warranted: _____ Unwarranted: _____

Comments: _____

_____

Side Slopes (Reviewed for Adequacy)

Comments: _____

_____

3:P:LAG4

Agency: _____

Project Title: _____

Project No.: _____

1. Posted Speed Limit: _____
2. Physical Comparison:
   (a) Standard Geometrics
   (b) Deviation Geometrics
   (c) Discussion
3. Cost Comparison:
   (a) Standard
   (b) Deviation
   (c) Discussion
4. Reasons Standard Cannot be Achieved at This Time:

5. Certification:

   I have examined this deviation request and believe it to be in the best public interest that it be granted.

_____ _____

Date Local Agency Engineer

42.1 General

This chapter defines the design standards that comply with the requirements of Title 23, USC Section 109(p) for Federal Highway Administration (FHWA) funded non-NHS public road projects on local streets and roads. The standards have been adopted by local agencies in accordance with RCWs 35.78 and 43.32 and apply to all arterial streets and roads. These standards cannot provide for all situations, but are intended to define the minimum elements for assistance to competent design professionals, without limiting innovation or creative effort.

For FHWA funded projects, these standards apply to all non-NHS streets and highways on federal functionally classified streets and roads except for rural minor collector and local access roads. These standards have also been accepted by the Transportation Improvement Board (TIB) and the County Road Administration Board (CRAB) as the standards applicable to their funding programs.

To be eligible for federal funding, pavement depth shall be designed to provide an extended service life of 8 years and provide a minimum surfacing depth of 30 mm (0.10 feet) for structural deficiencies and 18 mm (0.06 feet) for correcting rutting skid resistance or other nonstructural problems.

The included text and tables illustrate the minimum standards that apply to most of the design elements for FHWA funded projects. For other items of design, refer to the WSDOT *Design Manual* (M 22-01) and the 1990 AASHTO "A Policy on Geometric Design of Highways and Streets" (Green Book) for English units and the 1994 AASHTO Green Book for metric units.

Design standards are provided in English and metric units to allow the designer a choice during the transition period preceding the October 1, 2000, deadline for all FHWA contracts to be in metric units. It was recognized that other standards are being developed, published, and distributed that are needed for full implementation to metric conversion of projects. These publications include *Standard Specifications*, *MUTCD*, and other documents referred to and used in the administration of construction contracts.

42.2 City and County Design Standards

Appendixes 42.31 and 42.32 are incorporated into this manual for use in construction of local roads and streets. The statutory city and county design standards committee has adopted these publications for use on all public roads, classified as collector arterial or higher throughout Washington State. As updates are made by this committee, they will be included as an update to this manual.

42.3 Appendixes

42.31 City and County Design Standards — 1995 English Units

42.32 City and County Design Standards — 1995 Metric Units

5:P:LAG4

City and County Design Standards — 1995 English Units

The following document is the 1995 adopted City and County Design Standards.

City and County Design Standards

for the Construction of Urban and Rural Arterials and Collectors
Washington State 1995

English Units

City and County Design Standards

for the Construction of Urban and Rural Arterials and Collectors

Adopted on November 30, 1994, per RCW 35.78.030 and RCW 43.32.020

Contents

	Page
Introduction	1
Committee Membership	3
Design Standards for New Construction and Reconstruction	5
Definitions	5
Roadway Geometrics	6
Bridge and Other Design Criteria	7
Roadway Elements	8
Geometric Cross-Section for Two-Way Roads and Streets	9
Design Standards for 3-R Projects	11
Definitions	11
General Discussion	12
Design Standards for 2-R Projects	15
General	15
Design Parameters	15
References for New Construction and Reconstruction, 3-R, and 2-R Standards	17
Addresses to Acquire Reference Materials	18
Design Standards for Low Volume Roads and Streets	19
Design Elements and Other Considerations in the Low Volume Road	20
Design Process	23
Miscellaneous Considerations	24
References	24

2E:P:LAG4

Introduction

The City Design Standards Committee and the County Design Standards Committee, in accordance with RCWs 35.78.030 and 43.32.020, met to review and update current design standards for new construction and reconstruction. This addition provides English units of measurements. A metric version is available in response to a congressional mandate to convert by September 30, 1996. During 1995 and 1996, an English and metric version will be published to accommodate the transition period.

These standards apply to new construction and reconstruction projects, 2-R, 3-R, and 4-R projects, and low volume road and street projects on routes with federal functional classifications as Principal Arterials, Minor Arterials, and Collectors.

The Local Agency Engineer may approve use of minimum AASHTO and related standards as contained in the references on page 17. Construction utilizing lesser standards than these must have the approval of the Washington State Department of Transportation (WSDOT) Assistant Secretary for TransAid Service Center in accordance with RCW 35.78.040 or RCW 36.86.080 as appropriate.

In adopting these standards, the committees seek to encourage standardization of road design elements where necessary for consistency and to assure that motoring, bicycling, and pedestrian public safety needs are met. Considerations include safety, convenience, pleasant appearance, proper drainage, and economical maintenance. The committees recognize that cities and counties must have the flexibility to carry out the general duty to provide streets, roads, and highways for the diverse and changing needs of the traveling public.

These standards cannot provide for all situations. They are intended to assist, but not to substitute for, competent work by design professionals. It is expected that land surveyors, engineers, and architects will bring to each project the best skills from their respective disciplines. These standards are also not intended to limit any innovative or creative effort which could result in better quality, better cost savings, or both. An agency may adopt higher standards to fit local conditions. Special funding programs may also have varying standards.

The decision to use a particular road design element at a particular location should be made on the basis of an engineering analysis of the location. Thus, while this document provides design standards, it is not a substitute for engineering judgment.

Engineers should take into account all available information, including available funding, and use the professional judgment that comes from training and experience to make the final design determination. There should be some record, not necessarily formal or cumbersome, of the matters considered during the design process that justify decisions made regarding the final project design.

The 1990 AASHTO edition, “A Policy on Geometric Design of Highways and Streets” is referenced by page number, table, or figure number for design elements of the urban and rural highway. For those design elements not specifically identified, such as crown, superelevation, design speed, number of lanes, pavement design, intersection design, vertical clearance over walkway areas, etc., designers should refer to AASHTO.

Committee Membership

City Design Standards Committee RCW 35.78.020	County Design Standards Committee RCW 43.32.010	Other Participants
Dennis Covell Director of Engineering and Utilities City of Yakima	Ron Loewen County Engineer San Juan County	Wayne Gruen, Chair Deputy Assist. Secretary TransAid Service Center WSDOT
Dennis Wright City Engineer City of Pasco	Ken Stone County Engineer Cowlitz County	Craig Olson Association of Washington Cities
Lynn Price Assistant Engineering Division Manager City of Tacoma	Randy Knight Assistant County Engineer Pend Oreille County	Reid Wheeler/Randy Hart County Road Administration Board
Carole Richardson Design Engineer City of Spokane	Jim Haines Special Projects Engineer Spokane County	Al Deutscher Transportation Improvement Board
Linda DeBoldt, Manager Transportation Design City of Seattle	Bill Vlcek, Manager Engineering Service Section King County	
Ron Cameron City Engineer City of Tukwila	Jim Whitbread County Engineer Asotin County	

These design standards were developed with the approval and authorization of:

_____

Dennis B. Ingham
Assistant Secretary
for TransAid Service Center

Definitions

Clear Zone. The clear zone is the roadside border area starting at the edge of the traveled lane that is available for safe use by errant vehicles. The available clear zone is the distance, measured in meters, normal to the highway beginning at the edge of the traveled lane to the closest part of any fixed object or nontraversable obstacles. Establishment of a minimum width clear zone is recommended. Rigid objects and certain other obstacles within the zone should be removed, relocated to an inaccessible position outside the minimum clear zone, remodeled to make traversable, breakaway, or shielded. Traffic control signs and luminaires with breakaway supports are not considered obstacles. All new construction and reconstruction projects should consider a minimum clear zone distance.

Functional Classification. The roadway classifications referred to in this manual are the Federal Functional Classifications shown on the official functional class maps prepared by the Planning and Programming Service Center of WSDOT.

New Construction. New construction is the building of a new roadway or structure on substantially new alignment, or the upgrading of an existing roadway or structure by the addition of one or more continuous traffic lanes.

Reconstruction. A reconstruction project involves major construction activity in excess of 3-R activity (see page 11). Reconstruction includes significant changes in cross section and/or shifts in vertical or horizontal alignment. If 50 percent or more of the project length involves significant vertical or horizontal alignment changes, the project will be considered reconstruction. Reconstruction may require acquisition of additional right-of-way, and may include all items or work usually associated with new construction.

Traveled Lane. That portion of the roadway used for vehicle movement exclusive of the portion of the roadway width used or available for parking vehicles.

Average Daily Traffic (ADT). The general unit of measure for traffic defined as the total volume during a given time period (in whole days), greater than one day and less than one year, divided by the number of days in that time period.

Design Hourly Volume (DHV). The DHV is generally the 30th highest hourly volume (30 DHV) of the future year chosen for design. On the average rural road or arterial, DHV is about 15 percent of ADT. For urban areas, DHV is usually between 8 to 12 percent of the ADT.

3-R. Resurfacing, restoration, and rehabilitation of existing roadways with minimal changes to alignment or grade.

2-R. Resurfacing and restoration of existing roadways by supplementing the existing road prism.

Low Volume Roads and Streets. For this document, a collector arterial or lower classified road or street with an ADT of less than 400.

Roadway Geometrics

The following table provides some basic references to the designer. The designer should read the text associated with the referenced tables and should also consider other related tables and text in the AASHTO policy. Additional design references are on page 17.

Design Elements	References AASHTO, "A Policy on Geometric Design of Highways and Streets," 1990 Edition.
Stopping Sight Distance	Stopping Sight Distance (wet pavement) Table III-1, page 120, and text on pages 469-470 (rural) and page 480 (urban).
Passing Sight Distance	Single vehicle passing a single vehicle (Table III-5, page 133). Minimum passing sight distance single vehicle (Table VI-2B, page 471).
Entering Sight Distance (for All Movements)	Figures IX-32 through IX-40, pages 739-762, "Intersection sight distance at at-grade intersection."
Horizontal Curvature (Radius)	For speeds up to 40 mph in urban areas, use Figure III-18, page 190, "Maximum Safe and Comfortable Speed for Horizontal Curves on Low-Speed Urban Streets." In urban areas, for speeds over 40 mph and rural areas, use Table III-6, page 154, "Maximum Degree of Curve" and "Minimum Radius Determined for Limiting Values of e and f," "rural highways and high-speed urban street."
Vertical Sag Curves	Table III-42, page 293, "Design controls for sag vertical curves based on stopping sight distance." A sag vertical curve for nonilluminated roadways should be long enough so that the light beam distance is nearly the same as the stopping sight distance. Sag vertical curves shorter than shown may be justified for economical reasons in cases where an existing element, such as a structure that is not ready for replacement, controls the vertical profile.
Vertical Crest Curves	Table III-40, page 284, "Design controls for crest vertical curves based on stopping sight distance."
Vertical Grade	Table VI-3, page 472, Collector Rural and Urban up to 12 percent, or greater for short sections.

Bridge and Other Design Criteria

Design Elements	References
Bridge Width	The minimum bridge width for two-way structures is the greater of: (1) the design roadway width, or (2) the existing roadway width.
Loading	HS 25-44 (for federally funded projects), others may use HS 20-44.
Vehicular Railing	AASHTO Crash Tested Rail, or Approved Crash Tested Rail.
Pedestrian Railing	AASHTO.
Approach Railing	AASHTO Crash Tested Rail, or Approved Crash Tested Rail.
Vertical Clearance	16.5 feet minimum.
Bicycle	Chapter 1020 of the WSDOT *Design Manual* (RCW 35.75.060 and 36.82.145).
Signing	MUTCD, as modified by the Washington State Transportation Commission per RCW 47.36.030.
Americans with Disabilities Act-1990 ADA	Code of Federal Regulations 28 CFR Part 36 U.S. Department of Justice The Architectural and Transportation Barriers Compliance Board

Roadway Elements

Geometric Cross-Section for Two-Way Roads and Streets

Minimum Design Standards	Arterial											
	Principal[h]			Minor[h]				Collector[h]				
	Curbed[d]	Shouldered		Curbed[d]	Shouldered			Curbed[d]	Shouldered			
	DHV All	DHV Below 200	DHV 200 and Over	DHV All	DHV Below 100	DHV 100 to 200	DHV 201 and Over	DHV 400 and Over	ADT 400 to 750	ADT 751 to 1000	DHV 100 to 200	DHV 201 and Over
Right-of-Way	Not less than required for all design elements.											
Roadway Width[a][b][g][i]	24 ft	36 ft	40 ft	24 ft	32 ft	36 ft	40 ft	24 ft	26 ft	28 ft	34 ft	40 ft
Lane Width: (A) Exterior[b][i]	12 ft	12 ft	12 ft	12 ft	12 ft	12 ft	12 ft	12 ft	10 ft	10 ft	11 ft	12 ft
(B) Interior Thru[b]	11 ft	11 ft	11 ft	11 ft	11 ft	11 ft	11 ft	11 ft	10 ft	10 ft	11 ft	11 ft
(C) 2-Way Left Turn[b]	11 ft	11 ft	11 ft	11 ft	11 ft	11 ft	11 ft	11 ft	10 ft	10 ft	11 ft	11 ft
(D) Exclusive Turn[b]	11 ft	11 ft	11 ft	11 ft	11 ft	11 ft	11 ft	11 ft	10 ft	10 ft	11 ft	11 ft
(E) Parking	10 ft[c]			10 ft[c]					(e)			
Shoulder Width[f][g][i]		6 ft	8 ft		4 ft	6 ft	8 ft		3 ft	4 ft	6 ft	8 ft
Clear Zone/Side Slopes	AASHTO or TRB Special Report 214											
Ditch Slope (in slope)	Slopes steeper than 4:1 should only be used when achieving a 4:1 slope is impractical.											

[a]For curbed, distance from face of curb to face of curb. For shouldered, distance from outside edge to outside edge of shoulder.
[b]May be reduced to minimum allowed by AASHTO.
[c]8 feet may be acceptable when the lane is not likely to become a traffic lane in the foreseeable future.
[d]Curbed section is appropriate for urban setting.
[e]Industrial areas 8 feet to 10 feet. Residential areas 7 feet to 10 feet.
[f]When guardrail is necessary, provide 2 feet of widening or longer posts to ensure lateral support.
[g]For roads with traffic volumes of less than 400 ADT, the low volume road and street standards may be used.
[h]Federal functional classification defined by WSDOT (Planning and Programming Service Center).
[i]For guidance for one-way streets, see AASHTO, TRB Special Report 214, and the 1991 uniform fire code.

New Sidewalks (when provided)	
	• **Minimum Width** — 60 inches continuous clear width or 36 inches clear width with 60 inch by 60 inch clear passing spaces at 200-foot minimum intervals. • **Surface** — Firm, stable, and slip resistant. • **Crosslopes** — 1:50 (2%) maximum. • **Running Slope** — Minimum feasible slope consistent with slopes established by the adjacent roadway. • **Buffer** — Separation from vehicular ways by curbs or other barriers. ***Note:*** For temporary work or alterations to existing sidewalks or pedestrian facilities, refer to ADA rules. For pedestrian paths off public rights-of-ways, the designer should refer to uniform building codes and WAC 51-30 for the appropriate standards.

Definitions

Resurfacing. The addition of a layer or layers of paving material to provide additional structural integrity or improved serviceability and rideability.

Restoration. Work performed on pavement or bridge decks to render them suitable for an additional stage of construction. This may include supplementing the existing roadway by increasing surfacing and paving courses to provide structural capability, widening up to a total of 10 feet, and installing localized safety improvements. Restoration will generally be performed within the existing right-of-way.

Rehabilitation. Similar to "Restoration" except the work may include, but is not limited to, the following:

- Reworking or strengthening the base or subbase.
- Recycling or reworking existing materials to improve their structural integrity.
- Adding underdrains.
- Replacing or restoring malfunctioning joints.
- Substantial pavement under-sealing when essential for stabilization.
- Pavement grinding to restore smoothness, providing adequate structural thickness remains.
- Removing and replacing deteriorated materials.
- Crack and joint sealing but only when the required shape factor is established by routing or sawing.
- Improving or widening shoulders.

Rehabilitation may require acquisitions of additional right-of-way.

Safety Improvements. Safety improvements include:

- Upgrading existing substandard roadway design elements — roadway design elements are the physical characteristics of the highway such as alignment, grades, widths, sight distance, clearances, bridges, and the pavement structure including surface texture.
- Improving existing operational features — operational features include traffic control devices, left and right turn lanes, lighting, and pedestrian accommodations that provide for the safe and efficient movement of vehicles and pedestrians.
- Reducing the potential hazard of existing roadside features — roadside features include sideslopes, ditches, drainage facilities, barrier systems, sign supports, luminaires, trees, utility poles, and other features adjacent to the roadway.
- Upgrading bridge safety features — bridge rails, approach rails, connections, and terminals are considered bridge safety features.

General Discussion

Funding restrictions and other considerations do not always allow improvement of all existing roads and streets to the standards desirable for new construction. Therefore, when pavement condition deteriorates to the level of minimal standards, a cost-effective pavement improvement is needed.

A project becomes 3-R when the proposed improvement consists of resurfacing, restoration, or rehabilitation to preserve and extend the service life of the roadway, or enhances the safety of the traveling public.

3-R projects primarily involve work on an existing roadway surface and/or subsurface. Their purpose includes extending the service life, providing additional pavement strength, restoring or improving the original cross-section, increasing skid resistance, decreasing noise, improving the ride of the roadway, and enhancing safety.

Many factors influence the scope of 3-R projects, including:

- Roadside conditions.
- Funding constraints.
- Environmental concerns.
- Changing traffic and land use patterns.
- Deterioration rate of surfacing.
- Accidents or accident rates.

Normally, all 3-R improvements are made within the existing right-of-way, although acquiring right-of-way and/or easements should be considered when practical.

Each 3-R project should be considered in context with the entire route between logical termini and within the constraints imposed by limited funding and other considerations.

As a minimum, consider the following for a 3-R project:

- Guardrail end treatments upgraded to current standards.
- Appropriate transition and connection of approach rail to bridge rail.
- Beveled end sections for both parallel and cross-drain structures located in the clear zone.
- Relocating, protecting, or providing breakaway features for sign supports and luminaires.
- Protection for exposed bridge piers and abutments.
- Modification of raised drop inlets which present a hazard in the clear zone.

It is desirable to provide a roadside clear of fixed objects and nontraversable obstacles. The priority for action relative to roadside obstacles is: (1) eliminate, (2) modify, and (3) protect.

On all projects which include structures with deficient safety features, consideration must be given to correcting the deficient features. When complete upgrading is not practical, a partial or selective upgrading and/or other improvements should be considered to mitigate the effects of the substandard elements.

For design guidance, the designer should refer to the Transportation Research Board (TRB) Special Report 214, Designing Safer Roads, Practices for Resurfacing, Restoration, and Rehabilitation. This report recommends a variety of practices that encompass the 3-R process but with special focus on design. The designer can use the recommendations, along with other manuals, design aides, and local experience to develop the design of a 3-R project.

Design Standards for 2-R Projects

General

Funding restrictions do not always allow improvement of existing roadways to the standards desired. Therefore, when pavement condition reaches a minimal condition, cost effective pavement improvements are needed.

Resurfacing and restoration (2-R) projects involve work to restore the existing roadway surface and appurtenances for safe and efficient highway operation. This type of project provides for resurfacing of the existing roadway to provide structural adequacy, to restore the roadway surface condition, and to make minor safety improvements.

Major improvements are not the intent of this type of project. The 2-R project is defined as:

Resurfacing. The addition or replacement of a layer of paving material to provide additional structural integrity or improve serviceability and rideability.

Restoration. Work performed on either pavement sections or bridge decks to render them suitable for an additional stage of construction. This may include supplementing the existing roadway by increasing surfacing and paving courses to provide structural capability and minor shoulder widening to provide roadway section continuity. Restoration will generally be performed within the existing right-of-way.

Design Parameters

1. T**raveled Way and Roadway Width.** Resurfacing of the roadway will normally be to the existing width. This should include paving of previously unpaved shoulders. If short lengths of narrower lanes or shoulders exist within the project limits, widening should be considered to provide roadway section continuity within the project limits.

2. **Pavement**

   a. The existing pavement may be structurally adequate, but may require an overlay to correct other types of deficiencies. An 1.2 inch minimum depth of paving material should be used to correct deficiencies such as rutting, skid resistance, etc.

      If a general structural deficiency exists, the design service life minimum of eight years shall be used to determine the solution. A minimum depth of 1.2 inches is required for any structural deficiency in the surface.

   b. Existing superelevations should be evaluated. Curves that have superelevation rates less than the applicable 6 or 8 percent superelevation charts should be further evaluated. Those that are posted with advisory speeds of 15 mph or more below the speed limit, must be addressed. When the

superelevation for a curve does not meet this criteria, the maximum comfortable speed for that curve must be determined and the curve signed and marked in accordance with the provisions of the MUTCD.

3. **Safety Improvement.** Some safety improvements are normally included in 2-R projects. During project development, a generalized roadside evaluation should be prepared to identify those high priority roadside elements to be considered for mitigation.

   All high accident locations will be evaluated for treatment.

   The items below, in conjunction with the accident history and funding availability, will determine what roadside improvements will be included in the project. Safety items that are to be considered are:

   - Bridge approach guardrail — existing bridge approach guardrails should be evaluated. The transition and attachment to the bridge should be brought up to current standard. The leading or trailing guardrail ends should be upgraded when required as described below. If there is no existing approach guardrail, new approach guardrail should be installed to the current standards.
   - In the case of a bridge with wood rails, the rail will also require upgrading. All bridge rails other than wooden rails should be evaluated and consideration should be given to upgrade. The rails should be upgraded when feasible or by installing a thrie beam. The thrie beam should be mounted to the existing wood posts or an upgraded post system. The existing approach transition should be evaluated for compatibility with the bridge rail posts.
   - Remove unneeded guardrail.
   - Upgrade all guardrail ends. The preferred upgrade would be to the current standards. If standard widening is not practical, then whatever is obtainable should be achieved.
   - Update signing and pavement markings to conform to the MUTCD.
   - Relocate, protect, or provide breakaway features for sign supports and luminaires inside the clear zone.
   - Adjust utilities for location with clear zone standards.
   - Add or update traffic barriers/guardrail.
   - Beveling or extending culverts.
   - Consideration of slope flattening/ditch.
   - Adding channelization and/or illumination.
   - Improving sight distance.

References for New Construction and Reconstruction, 3-R, and 2-R Standards

The designer may use the standards and rationales incorporated into the following manuals (see page 18 for addresses to acquire reference materials).

AASHTO

- A Policy on Geometric Design of Highways and Streets
- Guide for Design of Pavement Structures
- Highway Drainage Guidelines
- Guide for Roadway Lighting
- Roadside Design Guide

Transportation Research Board (TRB)

- Highway Capacity Manual
- Special Report 214, Designing Safer Roads, "Practices for Resurfacing, Restoration, and Rehabilitation"

Washington State Department of Transportation (WSDOT)

- Standard Specifications for Road, Bridge, and Municipal Construction
- Supplement to MUTCD (WAC 468-95)
- Bridge Design Manual
- Highway Hydraulics Manual
- Standard Plans for Road, Bridge, and Municipal Construction
- Design Manual
- Pavement Design Manual

Institute of Transportation Engineers (ITE)

- Traffic Engineering Handbook

FHWA

- Manual of Uniform Traffic Control Devices (MUTCD)

ADA

- Federal/Register, June 20, 1994, Interim Final Rules, 36 CFR-Part 1191 Architectural and Transportation Barriers Compliance Board

Note: Final rules and standards are being developed. The comment period was still underway as of the date that this document was published.

Addresses to Acquire Reference Materials

AASHTO

American Association of State Highways
and Transportation Officials
444 North Capitol Street NW, Suite 249
Washington, DC 20001
(202) 624-5800
(202) 624-5806 (Fax)

TRB

Transportation Research Board
National Research Council
2101 Constitution Avenue NW
Washington, DC 20418

WSDOT

Engineering Publications
Department of Transportation
Transportation Building, Room SD3
Olympia, WA 98504-7400
(206) 705-7430
(206) 705-6808 (Fax)

ITE

Institute of Transportation Engineers
525 School Street SW, Suite 410
Washington, DC 20024
(202) 554-8050
(202) 863-5486 (Fax)

MUTCD

Superintendent of Documents
U.S. Government Printing Office
Washington, DC 20402

ADA

Office of the General Counsel
Architectural and Transportation Barriers
Compliance Board
1331 F Street NW, Suite 1000
Washington, DC 20004-1111
(202) 272-5434 (Voice), 272-5449 (TDD)
(202) 272-5447 (Fax)

Design Standards for Low Volume Roads and Streets

Note: This section is adapted from the report, "Guidelines for Low Volume Roads and Streets" developed by the Washington State Association of County Engineers/Public Works Directors.

There is universal agreement among highway, road, and street design professionals at all levels of government on the geometric standards to be applied when constructing or reconstructing high volume (ADT 1000) highway, road or street facilities. There also appears to be at least general agreement on standards and guidelines on facilities with traffic volumes as low as 400 ADT. There is less consensus, however, when it comes to facilities in the low volume category where the ADT is less than 400. It is estimated that well over half the state's 52,800 miles of county roads and city streets under the jurisdiction of licensed professional county and city engineers falls in the low volume category. These standards are in response to the need for design guidelines, procedures, and considerations specifically geared to these low volume roads and streets. The types of improvements to which the guidelines apply may be either publicly or privately funded, and either a new construction or reconstruction project.

It should be understood that these standards are directed at substantive improvements, not at so called "spot improvements" that affect only a small portion of a facility, such as an isolated curve or a minor intersection. Spot improvements on a geometrically substandard facility should be evaluated on an individual basis and be designed to blend in with the remaining adjacent features whenever a more extensive improvement cannot be justified.

These standards do not replace any of the previous standards in this document but rather serve as a supplement specifically regarding low volume facilities. The intent of these standards is identical to that of the AASHTO policy, which is "… to provide guidance to the designer by referencing a recommended range of values for critical dimensions. Sufficient flexibility is permitted to encourage independent designs tailored to particular situations." Licensed professional county and city engineers have the necessary background and experience to do such tailoring.

It should be recognized that low volume roads and streets usually serve different functions than freeways and arterials; the demands on them are not the same. To equate them with freeways and arterials would likely lead to overdesign and make them far more costly than need be. Accidents on low volume facilities are relatively rare events. National statistics indicate that on the average road carrying 50 vehicles per day, there is only one accident per year for every 2.7 miles[1]. Since accident records show that higher standards do not significantly reduce non-intersection accidents[2], it would not be cost effective to adopt high standards with this expectation.

The decision as to the appropriate design will be based in part on the facility's functional classification. If it is a new facility in the arterial or collector class, every reasonable effort should be made to construct to at least minimum design standards. If it falls into the local access class, there may be justification for a

modified minimum or special design, referred to in the AASHTO Manual under the heading of "Special Purpose Roads." Another excellent source of information regarding design standards for out-of-the-ordinary situations is the United States Forest Service (USFS) Road Preconstruction Handbook, which might be especially helpful for low volume and low speed situations in difficult terrain. When the proposed improvement is on an existing facility, a 3-R type project may turn out to be the only economically feasible solution.

Design Elements and Other Considerations in the Low Volume Road Design Process

Preface

In the following text, each of the major design elements is individually addressed as it relates to low volume road and street design. It should be noted that no single design element stands completely on its own, but that they are directly or indirectly related. The experienced designer will refer to this document and referenced publications in the process of taking a project from the programming to the construction stage.

Economic Analysis

While economic analysis is not in itself a design element, the concept is important when dealing with design of a low volume road and street. While it might be desirable from an engineering viewpoint to construct or reconstruct all improvements to full design standards, the reality is that there are not nearly enough funds available at the local level to do so. Federal fuel tax funds are available for construction on designated arterials only and must be matched with local funds. Most state fuel tax special program funds are similarly earmarked for construction on designated arterials with local matching funds required. No special program funds are available for routine maintenance activities.

The engineer must apply some sort of economic analysis to each project and determine how to strike the best balance among the desired design standards, the safety and mobility of the traveling public, and the available funds. The exact manner in which such an analysis is done is up to the professional judgment and experience of the engineer and should be appropriately documented.

Design Traffic Volume

Roads and streets should be designed for a specific traffic volume range, using either the current average daily traffic (ADT) or projected ADT for some future design year, preferably 20 years hence. Current and future land use trends should also be considered in making these decisions. On low volume facilities, traffic volumes do not normally change significantly for the foreseeable future. In an urban environment, these would typically be relatively short streets that are not likely to be extended. In rural areas, they most likely would be remote agricultural or natural resource access roads where there is little or no likelihood of land use change.

Design Speed

The geometric design features of a low volume facility should be consistent with the design speed appropriate for the facility. This may vary from a low of 20 mph in mountainous terrain to a high of 65 mph in flat terrain. It should be noted, however, that the design speed does not necessarily represent the anticipated operating or posted speed.

Sight Distance

The AASHTO Manual contains an exhaustive discussion of the factors and assumptions associated with the calculation of stopping, passing, and intersection sight distance. Stopping sight distance is a vital consideration for both urban and rural situations. Passing sight distance will likely be pertinent only in rural situations where operating speeds are in the 30 mph and higher range. Intersection sight distance must be considered in light of the terrain in which the facility is located, and in urban situations, to what extent parking is permitted. Where the improvement contemplates some kind of pavement, the simplest approach is to base the design on stopping sight distance, and to control passing and intersection situations with appropriate striping.

Horizontal Alignment

On most low volume road and streets, especially those classified as local access where design speeds are in the 20 to 25 mph range, short radius curves may be tolerated and the superelevation may not be necessary. On roads where design speeds may run as high as 65 mph, horizontal alignment becomes a most important consideration. Each individual road or street, however, is unique and must be carefully evaluated to ensure appropriate alignment. The computations involving curve radius and superelevation are important elements in the design process and are well detailed in the AASHTO Manual.

Vertical Alignment

For an urban, curbed, low volume street, the minimum acceptable grade to assure proper drainage is an important consideration. Tolerable maximum grades will vary with road use. A steeper grade may be acceptable on an urban residential street than on a rural road serving heavy trucks. Intersections on steep grades should be avoided whenever possible, especially in areas with recurring snow and ice problems. In urban areas, ease of access for emergency vehicles is also to be considered when establishing grades. For rural projects, AASHTO includes tables of maximum grades related to design speed and terrain. The design of a crest and sag vertical curves is related to design speed and is important in rural projects with higher design speeds. The AASHTO Manual is the best source for this process and for the integration of vertical and horizontal curvature.

Cross Section Elements

The AASHTO Manual and previous standards in this publication contain tables of recommended minimum roadway, pavement and shoulder widths for various design speeds and various levels of ADT, with the low end addressing all volumes below 400 ADT. It is recognized, however, that there are thousands of miles of both rural and urban roads and streets on which traffic volumes fall even below 150 ADT. In this category, there may be unique situations for which the engineer can justify and use somewhat lesser widths than those suggested by AASHTO. An example of such lesser widths is shown in the table below.

Typical Roadway Width (Feet)
Two-Lane Low Volume Roads and Streets
Based on Design Year ADT

Design Elements	**ADT 150-400 All Design Speeds**		**ADT Below 150**					
			Speeds Above 40		Speeds Below 40			
							Trucks Below 10%	
Functional Class	Coll.	Acc.	Coll.	Acc.	Coll.	Acc.	Coll.	Acc.
Roadway Width(1)	24	24	24	22	22	20	20	18(2)

(1)Roadway width is the distance from outside of shoulder to outside of shoulder regardless of surface and shoulder type. An additional 8 feet should be added for parking wherever it is to be permitted.
(2)The 1991 Uniform Fire Code requires an unobstructed width of 20 feet for any road providing access to a building, subject to certain exceptions that may be approved by the local fire authority. WAC 51-24-10201 states that "Fire apparatus access road shall be provided and maintained in accordance with locally adopted Street, Road, and Access Standards."

Drainage

All roadways must have adequate crown or adequate cross-slope to get water off the roadway. Careful cross-slope design is especially important at the ends of horizontal curves with superelevation and at intersections. The size and shape of drainage ditches will depend on the amount of runoff and the type of soils in which the road is being built. It must also be recognized that the drainage ditch and headwalls are usually in the clear zone, or recovery area, which is an important roadway safety feature. When there are curbs and gutters, especially where grades are at or near recommended minimums, the location and design of inlets becomes most important.

Clear Zone

The designer must be aware of the extensive tables of recommended clear zone distances both in the AASHTO and LAG Manuals. It must also be recognized, however, that serious accidents on low volume roads, especially on those below 150 ADT, are rare occurrences. At this low end of the scale, the cost of providing the recommended clear zone may be prohibitive. Research[4] undertaken to re-evaluate the safety needs on low volume rural roads states that the suggested values for side slopes and clear zones should be recognized as idealistic objectives and that a more realistic approach to roadside safety on low volume roads should depend on achieving a balance between the cost and the safety effectiveness of the design treatment.

It is further stated that, while the application of such an analysis to low volume roads indicates that individual roadside safety treatments yield very small safety contributions, some low cost improvements do appear to be cost effective,[5] especially on the outside of curves. The removal of certain trees and relocation of utility poles are recommended. Also cited as being cost effective are the placement of guardrails on steep slopes, removal of unnecessary guardrails on flat slopes, and the flattening of steep but low embankments. In this regard, it is most important that the designer be aware not only of pertinent published recommendations, but also of research done subsequent to their adoption. In the final analysis, the designer must apply his or her own professional judgment in making the final design decisions and be prepared to defend and justify them if necessary.

Guardrail

If it has been established that a guardrail is justified on a particular improvement the designer must determine the best location, type of construction, and post-spacing that would be most appropriate for the function and anticipated traffic volume of the facility. The designer should be aware that warrants and designs developed for high volume, high speed facilities are not necessarily appropriate for low volume and/or low speed locations[6].

Utilities

All utility structures and appurtenances that extend above the surface of the road right-of-way are a potential hazard to users of the facility and should be located near the edge of the right-of-way, especially in rural locations with higher speeds of travel. In an urban environment on curbed streets with lower speeds, the face of utility poles may be located to within 1.5 feet of the curb face. When a project involves reconstructing an existing facility in a restricted corridor, where additional right-of-way is prohibitive or impossible to acquire and existing utility structures must be accommodated, a joint effort by the roadway and utility designers will be needed to assure that a safety-sensitive design has been achieved.

Railroad Crossings

The roadway width across a railroad should be the same as the roadway width on each side of the crossing. Appropriate grade crossing controls should be provided (including advance warning signs) commensurate with the design speed of the facility and the sight distance required. Maximum practicable sight distance at the crossing itself is desirable, especially on a mainline crossing where train speeds are high.

Miscellaneous Considerations

- Roadway approaches, public or private, should be designed to provide adequate sight distance in both directions on the facility being accessed, and should not interfere with drainage.
- ADA facilities are not normally associated with low volume roads and streets, except that in an urban development with sidewalks and curbs, the appropriate wheelchair ramps should be provided at intersections. The designer should be aware of the requirements of the Americans with Disabilities Act.
- Bicycle facilities would not normally be expected in a low volume environment, unless the facility is part of an adopted bicycle trail plan. It may then be desirable to provide a widened shoulder and appropriate drainage grates.
- Pedestrian facilities should be provided where significant numbers of children are walking to or from school, or where other pedestrian traffic warrants.
- Truck turning radii as detailed in the AASHTO Manual should be provided where significant volumes of heavy trucks are expected.
- Bus pullouts would not normally be part of a low volume project design, but certainly may be provided in case of special need.

References

[1]"Highway Safety Requirements for Low Volume Roads, John C. Glennon, Transportation Research Record 702, 1979.

[2]"Economics of Design Standards for Low Volume Roads," C. H. Oglesby, NCHRP Report 63, 1969.

[3]"Designing Safer Roads, Practices for Resurfacing, Restoration, and Rehabilitation," Special Report 214, Transportation Research Board, 1987.

[4]"Highway Safety Requirements for Low Volume Rural Roads," John C. Glennon, Transportation Research Records #702, 1979.

[5]"Design and Traffic Control Guidelines for Low Volume Rural Roads," John C. Glennon, NCHRP Report 214, 1979.

[6]"Guidelines for Guardrail on Low Volume Roads," Virginia Transportation Research Council, 1990.

[7]1993 AASHTO Guide to Metric Conversion.

3E:P:LAG4

City and County Design Standards — 1995 Metric Units

The following document is the 1995 adopted City and County Design Standards.

City and County Design Standards

for the Construction of Urban and Rural Arterials and Collectors
Washington State 1995

Metric Units

City and County Design Standards

for the Construction of Urban and Rural Arterials and Collectors

Adopted on November 30, 1994, per RCW 35.78.030 and RCW 43.32.020

Contents

	Page
Introduction	1
Committee Membership	3
Design Standards for New Construction and Reconstruction	5
Definitions	5
Roadway Geometrics	6
Bridge and Other Design Criteria	7
Roadway Elements	8
Geometric Cross-Section for Two-Way Roads and Streets	9
Design Standards for 3-R Projects	11
Definitions	11
General Discussion	12
Design Standards for 2-R Projects	15
General	15
Design Parameters	15
References for New Construction and Reconstruction, 3-R, and 2-R Standards	17
Addresses to Acquire Reference Materials	18
Design Standards for Low Volume Roads and Streets	19
Design Elements and Other Considerations in the Low Volume Road	20
Design Process	23
Miscellaneous Considerations	24
References	24

2M:P:LAG4

Introduction

The City Design Standards Committee and the County Design Standards Committee, in accordance with RCWs 35.78.030 and 43.32.020, met to review and update current design standards for new construction and reconstruction. This addition converts English units of measurements to metric units, in response to a congressional mandate to convert by September 30, 1996. During 1995 and 1996, an English and metric version will be published to accommodate the transition period.

These standards apply to new construction and reconstruction projects, 2-R, 3-R, and 4-R projects, and low volume road and street projects on routes with federal functional classifications as Principal Arterials, Minor Arterials, and Collectors.

The Local Agency Engineer may approve use of minimum AASHTO and related standards as contained in the references on page 17. Construction utilizing lesser standards than these must have the approval of the Washington State Department of Transportation (WSDOT) Assistant Secretary for TransAid Service Center in accordance with RCW 35.78.040 or RCW 36.86.080 as appropriate.

In adopting these standards, the committees seek to encourage standardization of road design elements where necessary for consistency and to assure that motoring, bicycling, and pedestrian public safety needs are met. Considerations include safety, convenience, pleasant appearance, proper drainage, and economical maintenance. The committees recognize that cities and counties must have the flexibility to carry out the general duty to provide streets, roads, and highways for the diverse and changing needs of the traveling public.

These standards cannot provide for all situations. They are intended to assist, but not to substitute for, competent work by design professionals. It is expected that land surveyors, engineers, and architects will bring to each project the best skills from their respective disciplines. These standards are also not intended to limit any innovative or creative effort which could result in better quality, better cost savings, or both. An agency may adopt higher standards to fit local conditions. Special funding programs may also have varying standards.

The decision to use a particular road design element at a particular location should be made on the basis of an engineering analysis of the location. Thus, while this document provides design standards, it is not a substitute for engineering judgment.

Engineers should take into account all available information, including available funding, and use the professional judgment that comes from training and experience to make the final design determination. There should be some record, not necessarily formal or cumbersome, of the matters considered during the design process that justify decisions made regarding the final project design.

The 1990 AASHTO edition, “A Policy on Geometric Design of Highways and Streets” is referenced by page number, table, or figure number for design elements of the urban and rural highway. For those design elements not specifically identified, such as crown, superelevation, design speed, number of lanes, pavement design, intersection design, vertical clearance over walkway areas, etc., designers should refer to AASHTO. For further detail on metric conversion the designer is referred to the 1993 AASHTO Guide to Metric Conversion, and the 1994 AASHTO edition, “A Policy on Geometric Design of Highways and Streets.”

Committee Membership

City Design Standards Committee RCW 35.78.020	County Design Standards Committee RCW 43.32.010	Other Participants
Dennis Covell Director of Engineering and Utilities City of Yakima	Ron Loewen County Engineer San Juan County	Wayne Gruen, Chair Deputy Assist. Secretary TransAid Service Center WSDOT
Dennis Wright City Engineer City of Pasco	Ken Stone County Engineer Cowlitz County	Craig Olson Association of Washington Cities
Lynn Price Assistant Engineering Division Manager City of Tacoma	Randy Knight Assistant County Engineer Pend Oreille County	Reid Wheeler/Randy Hart County Road Administration Board
Carole Richardson Design Engineer City of Spokane	Jim Haines Special Projects Engineer Spokane County	John Tevis/Al Deutscher Transportation Improvement Board
Linda DeBoldt, Manager Transportation Design City of Seattle	Bill Vlcek, Manager Engineering Service Section King County	
Ron Cameron City Engineer City of Tukwila	Jim Whitbread County Engineer Asotin County	

These design standards were developed with the approval and authorization of:

_____

Dennis B. Ingham
Assistant Secretary
for TransAid Service Center

Definitions

Clear Zone. The clear zone is the roadside border area starting at the edge of the traveled lane that is available for safe use by errant vehicles. The available clear zone is the distance, measured in meters, normal to the highway beginning at the edge of the traveled lane to the closest part of any fixed object or nontraversable obstacles. Establishment of a minimum width clear zone is recommended. Rigid objects and certain other obstacles within the zone should be removed, relocated to an inaccessible position outside the minimum clear zone, remodeled to make traversable, breakaway, or shielded. Traffic control signs and luminaires with breakaway supports are not considered obstacles. All new construction and reconstruction projects should consider a minimum clear zone distance.

Functional Classification. The roadway classifications referred to in this manual are the Federal Functional Classifications shown on the official functional class maps prepared by the Planning and Programming Service Center of WSDOT.

New Construction. New construction is the building of a new roadway or structure on substantially new alignment, or the upgrading of an existing roadway or structure by the addition of one or more continuous traffic lanes.

Reconstruction. A reconstruction project involves major construction activity in excess of 3-R activity (see page 11). Reconstruction includes significant changes in cross section and/or shifts in vertical or horizontal alignment. If 50 percent or more of the project length involves significant vertical or horizontal alignment changes, the project will be considered reconstruction. Reconstruction may require acquisition of additional right-of-way, and may include all items or work usually associated with new construction.

Traveled Lane. That portion of the roadway used for vehicle movement exclusive of the portion of the roadway width used or available for parking vehicles.

Average Daily Traffic (ADT). The general unit of measure for traffic defined as the total volume during a given time period (in whole days), greater than one day and less than one year, divided by the number of days in that time period.

Design Hourly Volume (DHV). The DHV is generally the 30th highest hourly volume (30 DHV) of the future year chosen for design. On the average rural road or arterial, DHV is about 15 percent of ADT. For urban areas, DHV is usually between 8 to 12 percent of the ADT.

3-R. Resurfacing, restoration, and rehabilitation of existing roadways with minimal changes to alignment or grade.

2-R. Resurfacing and restoration of existing roadways by supplementing the existing road prism.

Low Volume Roads and Streets. For this document, a collector arterial or lower classified road or street with an ADT of less than 400.

Roadway Geometrics

The following table provides some basic references to the designer. The designer should read the text associated with the referenced tables and should also consider other related tables and text in the AASHTO policy. Additional design references are on page 17.

Design Elements	References AASHTO, "A Policy on Geometric Design of Highways and Streets," 1990 Edition. 1993 Guide to Metric Conversion.
Stopping Sight Distance	Stopping Sight Distance (wet pavement) Table III-1, page 120, and text on pages 469-470 (rural) and page 480 (urban).
Passing Sight Distance	Single vehicle passing a single vehicle (Table III-5, page 133). Minimum passing sight distance single vehicle (Table VI-2B, page 471).
Entering Sight Distance (for All Movements)	Figures IX-32 through IX-40, pages 739-762, "Intersection sight distance at at-grade intersection."
Horizontal Curvature (Radius)	For speeds up to 60 km/h in urban areas, use Figure III-18, page 190, "Maximum Safe and Comfortable Speed for Horizontal Curves on Low-Speed Urban Streets." In urban areas, for speeds over 60 km/h and rural areas, use Table III-6, page 154, "Maximum Degree of Curve" and "Minimum Radius Determined for Limiting Values of e and f," "rural highways and high-speed urban street."
Vertical Sag Curves	Table III-42, page 293, "Design controls for sag vertical curves based on stopping sight distance." A sag vertical curve for nonilluminated roadways should be long enough so that the light beam distance is nearly the same as the stopping sight distance. Sag vertical curves shorter than shown may be justified for economical reasons in cases where an existing element, such as a structure that is not ready for replacement, controls the vertical profile.
Vertical Crest Curves	Table III-40, page 284, "Design controls for crest vertical curves based on stopping sight distance."
Vertical Grade	Table VI-3, page 472, Collector Rural and Urban up to 12 percent, or greater for short sections.

Bridge and Other Design Criteria

Design Elements	References
Bridge Width	The minimum bridge width for two-way structures is the greater of: (1) the design roadway width, or (2) the existing roadway width.
Loading	HS 25-44 (for federally funded projects), others may use HS 20-44.
Vehicular Railing	AASHTO Crash Tested Rail, or Approved Crash Tested Rail.
Pedestrian Railing	AASHTO.
Approach Railing	AASHTO Crash Tested Rail, or Approved Crash Tested Rail.
Vertical Clearance	5 m minimum.
Bicycle	Chapter 1020 of the WSDOT *Design Manual* (RCW 35.75.060 and 36.82.145).
Signing	MUTCD, as modified by the Washington State Transportation Commission per RCW 47.36.030.
Americans with Disabilities Act-1990 ADA	Code of Federal Regulations 28 CFR Part 36 U.S. Department of Justice The Architectural and Transportation Barriers Compliance Board

Roadway Elements

Geometric Cross-Section for Two-Way Roads and Streets

Minimum Design Standards	Arterial											
	Principal[h]			Minor[h]				Collector[h]				
	Curbed[d]	Shouldered		Curbed[d]	Shouldered			Curbed[d]	Shouldered			
	DHV All	DHV Below 200	DHV 200 and Over	DHV All	DHV Below 100	DHV 100 to 200	DHV 201 and Over	DHV 400 and Over	ADT 400 to 750	ADT 751 to 1000	DHV 100 to 200	DHV 201 and Over
Right-of-Way	Not less than required for all design elements.											
Roadway Width[a][b][g][i]	7.2 m	10.8 m	12.0 m	7.2 m	9.6 m	10.8 m	12.0 m	7.2 m	7.8 m	8.4 m	10.2 m	12.0 m
Lane Width: (A) Exterior[b][i]	3.6 m	3.6 m	3.6 m	3.6 m	3.6 m	3.6 m	3.6 m	3.6 m	3.0 m	3.0 m	3.3 m	3.6 m
(B) Interior Thru[b]	3.3 m	3.3 m	3.3 m	3.3 m	3.3 m	3.3 m	3.3 m	3.3 m	3.0 m	3.0 m	3.3 m	3.3 m
(C) 2-Way Left Turn[b]	3.3 m	3.3 m	3.3 m	3.3 m	3.3 m	3.3 m	3.3 m	3.3 m	3.0 m	3.0 m	3.3 m	3.3 m
(D) Exclusive Turn[b]	3.3 m	3.3 m	3.3 m	3.3 m	3.3 m	3.3 m	3.3 m	3.3 m	3.0 m	3.0 m	3.3 m	3.3 m
(E) Parking	3.0 m[c]			3.0 m[c]				(e)				
Shoulder Width[f][g][i]		1.8 m	2.4 m		1.2 m	1.8 m	2.4 m		0.9 m	1.2 m	1.8 m	2.4 m
Clear Zone/Side Slopes	AASHTO or TRB Special Report 214											
Ditch Slope (in slope)	Slopes steeper than 4:1 should only be used when achieving a 4:1 slope is impractical.											

[a]For curbed, distance from face of curb to face of curb. For shouldered, distance from outside edge to outside edge of shoulder.
[b]May be reduced to minimum allowed by AASHTO.
[c]2.4 m may be acceptable when the lane is not likely to become a traffic lane in the foreseeable future.
[d]Curbed section is appropriate for urban setting.
[e]Industrial areas 2.4 m to 3.0 m. Residential areas 2.1 m to 3.0 m.
[f]When guardrail is necessary, provide 0.6 m of widening or longer posts to ensure lateral support.
[g]For roads with traffic volumes of less than 400 ADT, the low volume road and street standards may be used.
[h]Federal functional classification defined by WSDOT (Planning and Programming Service Center).
[i]For guidance for one-way streets, see AASHTO, TRB Special Report 214, and the 1991 uniform fire code.

New Sidewalks (when provided)	
	• **Minimum Width** — 1525 mm continuous clear width or 915 mm clear width with 1525 mm by 1525 mm clear passing spaces at 61 m minimum intervals. • **Surface** — Firm, stable, and slip resistant. • **Crosslopes** — 1:50 (2%) maximum. • **Running Slope** — Minimum feasible slope consistent with slopes established by the adjacent roadway. • **Buffer** — Separation from vehicular ways by curbs or other barriers. ***Note:*** For temporary work or alterations to existing sidewalks or pedestrian facilities, refer to ADA rules. For pedestrian paths off public rights-of-ways, the designer should refer to uniform building codes and WAC 51-30 for the appropriate standards.

Definitions

Resurfacing. The addition of a layer or layers of paving material to provide additional structural integrity or improved serviceability and rideability.

Restoration. Work performed on pavement or bridge decks to render them suitable for an additional stage of construction. This may include supplementing the existing roadway by increasing surfacing and paving courses to provide structural capability, widening up to a total of 3 m, and installing localized safety improvements. Restoration will generally be performed within the existing right-of-way.

Rehabilitation. Similar to "Restoration" except the work may include, but is not limited to, the following:

- Reworking or strengthening the base or subbase.
- Recycling or reworking existing materials to improve their structural integrity.
- Adding underdrains.
- Replacing or restoring malfunctioning joints.
- Substantial pavement under-sealing when essential for stabilization.
- Pavement grinding to restore smoothness, providing adequate structural thickness remains.
- Removing and replacing deteriorated materials.
- Crack and joint sealing but only when the required shape factor is established by routing or sawing.
- Improving or widening shoulders.

Rehabilitation may require acquisitions of additional right-of-way.

Safety Improvements. Safety improvements include:

- Upgrading existing substandard roadway design elements — roadway design elements are the physical characteristics of the highway such as alignment, grades, widths, sight distance, clearances, bridges, and the pavement structure including surface texture.
- Improving existing operational features — operational features include traffic control devices, left and right turn lanes, lighting, and pedestrian accommodations that provide for the safe and efficient movement of vehicles and pedestrians.
- Reducing the potential hazard of existing roadside features — roadside features include sideslopes, ditches, drainage facilities, barrier systems, sign supports, luminaires, trees, utility poles, and other features adjacent to the roadway.
- Upgrading bridge safety features — bridge rails, approach rails, connections, and terminals are considered bridge safety features.

General Discussion

Funding restrictions and other considerations do not always allow improvement of all existing roads and streets to the standards desirable for new construction. Therefore, when pavement condition deteriorates to the level of minimal standards, a cost-effective pavement improvement is needed.

A project becomes 3-R when the proposed improvement consists of resurfacing, restoration, or rehabilitation to preserve and extend the service life of the roadway, or enhances the safety of the traveling public.

3-R projects primarily involve work on an existing roadway surface and/or subsurface. Their purpose includes extending the service life, providing additional pavement strength, restoring or improving the original cross-section, increasing skid resistance, decreasing noise, improving the ride of the roadway, and enhancing safety.

Many factors influence the scope of 3-R projects, including:

- Roadside conditions.
- Funding constraints.
- Environmental concerns.
- Changing traffic and land use patterns.
- Deterioration rate of surfacing.
- Accidents or accident rates.

Normally, all 3-R improvements are made within the existing right-of-way, although acquiring right-of-way and/or easements should be considered when practical.

Each 3-R project should be considered in context with the entire route between logical termini and within the constraints imposed by limited funding and other considerations.

As a minimum, consider the following for a 3-R project:

- Guardrail end treatments upgraded to current standards.
- Appropriate transition and connection of approach rail to bridge rail.
- Beveled end sections for both parallel and cross-drain structures located in the clear zone.
- Relocating, protecting, or providing breakaway features for sign supports and luminaires.
- Protection for exposed bridge piers and abutments.
- Modification of raised drop inlets which present a hazard in the clear zone.

It is desirable to provide a roadside clear of fixed objects and nontraversable obstacles. The priority for action relative to roadside obstacles is: (1) eliminate, (2) modify, and (3) protect.

On all projects which include structures with deficient safety features, consideration must be given to correcting the deficient features. When complete upgrading is not practical, a partial or selective upgrading and/or other improvements should be considered to mitigate the effects of the substandard elements.

For design guidance, the designer should refer to the Transportation Research Board (TRB) Special Report 214, Designing Safer Roads, Practices for Resurfacing, Restoration, and Rehabilitation. This report recommends a variety of practices that encompass the 3-R process but with special focus on design. The designer can use the recommendations, along with other manuals, design aides, and local experience to develop the design of a 3-R project.

Design Standards for 2-R Projects

General

Funding restrictions do not always allow improvement of existing roadways to the standards desired. Therefore, when pavement condition reaches a minimal condition, cost effective pavement improvements are needed.

Resurfacing and restoration (2-R) projects involve work to restore the existing roadway surface and appurtenances for safe and efficient highway operation. This type of project provides for resurfacing of the existing roadway to provide structural adequacy, to restore the roadway surface condition, and to make minor safety improvements.

Major improvements are not the intent of this type of project. The 2-R project is defined as:

Resurfacing. The addition or replacement of a layer of paving material to provide additional structural integrity or improve serviceability and rideability.

Restoration. Work performed on either pavement sections or bridge decks to render them suitable for an additional stage of construction. This may include supplementing the existing roadway by increasing surfacing and paving courses to provide structural capability and minor shoulder widening to provide roadway section continuity. Restoration will generally be performed within the existing right-of-way.

Design Parameters

1. T**raveled Way and Roadway Width.** Resurfacing of the roadway will normally be to the existing width. This should include paving of previously unpaved shoulders. If short lengths of narrower lanes or shoulders exist within the project limits, widening should be considered to provide roadway section continuity within the project limits.

2. **Pavement**

   a. The existing pavement may be structurally adequate, but may require an overlay to correct other types of deficiencies. An 18 mm minimum depth of paving material should be used to correct deficiencies such as rutting, skid resistance, etc.

      If a general structural deficiency exists, the design service life minimum of eight years shall be used to determine the solution. A minimum depth of 30 mm is required for any structural deficiency in the surface.

   b. Existing superelevations should be evaluated. Curves that have superelevation rates less than the applicable 6 or 8 percent superelevation charts should be further evaluated. Those that are posted with advisory speeds of 25 km/h or more below the speed limit, must be addressed. When the

superelevation for a curve does not meet this criteria, the maximum comfortable speed for that curve must be determined and the curve signed and marked in accordance with the provisions of the MUTCD.

3. **Safety Improvement.** Some safety improvements are normally included in 2-R projects. During project development, a generalized roadside evaluation should be prepared to identify those high priority roadside elements to be considered for mitigation.

   All high accident locations will be evaluated for treatment.

   The items below, in conjunction with the accident history and funding availability, will determine what roadside improvements will be included in the project. Safety items that are to be considered are:

   - Bridge approach guardrail — existing bridge approach guardrails should be evaluated. The transition and attachment to the bridge should be brought up to current standard. The leading or trailing guardrail ends should be upgraded when required as described below. If there is no existing approach guardrail, new approach guardrail should be installed to the current standards.
   - In the case of a bridge with wood rails, the rail will also require upgrading. All bridge rails other than wooden rails should be evaluated and consideration should be given to upgrade. The rails should be upgraded when feasible or by installing a thrie beam. The thrie beam should be mounted to the existing wood posts or an upgraded post system. The existing approach transition should be evaluated for compatibility with the bridge rail posts.
   - Remove unneeded guardrail.
   - Upgrade all guardrail ends. The preferred upgrade would be to the current standards. If standard widening is not practical, then whatever is obtainable should be achieved.
   - Update signing and pavement markings to conform to the MUTCD.
   - Relocate, protect, or provide breakaway features for sign supports and luminaires inside the clear zone.
   - Adjust utilities for location with clear zone standards.
   - Add or update traffic barriers/guardrail.
   - Beveling or extending culverts.
   - Consideration of slope flattening/ditch.
   - Adding channelization and/or illumination.
   - Improving sight distance.

References for New Construction and Reconstruction, 3-R, and 2-R Standards

The designer may use the standards and rationales incorporated into the following manuals (see page 18 for addresses to acquire reference materials).

AASHTO

- A Policy on Geometric Design of Highways and Streets
- Guide for Design of Pavement Structures
- Highway Drainage Guidelines
- Guide for Roadway Lighting
- Roadside Design Guide

Transportation Research Board (TRB)

- Highway Capacity Manual
- Special Report 214, Designing Safer Roads, "Practices for Resurfacing, Restoration, and Rehabilitation"

Washington State Department of Transportation (WSDOT)

- Standard Specifications for Road, Bridge, and Municipal Construction
- Supplement to MUTCD (WAC 468-95)
- Bridge Design Manual
- Highway Hydraulics Manual
- Standard Plans for Road, Bridge, and Municipal Construction
- Design Manual
- Pavement Design Manual

Institute of Transportation Engineers (ITE)

- Traffic Engineering Handbook

FHWA

- Manual of Uniform Traffic Control Devices (MUTCD)

ADA

- Federal/Register, June 20, 1994, Interim Final Rules, 36 CFR-Part 1191 Architectural and Transportation Barriers Compliance Board

Note: Final rules and standards are being developed. The comment period was still underway as of the date that this document was published.

Addresses to Acquire Reference Materials

AASHTO

American Association of State Highways
and Transportation Officials
444 North Capitol Street NW, Suite 249
Washington, DC 20001
(202) 624-5800
(202) 624-5806 (Fax)

TRB

Transportation Research Board
National Research Council
2101 Constitution Avenue NW
Washington, DC 20418

WSDOT

Engineering Publications
Department of Transportation
Transportation Building, Room SD3
Olympia, WA 98504-7400
(206) 705-7430
(206) 705-6808 (Fax)

ITE

Institute of Transportation Engineers
525 School Street SW, Suite 410
Washington, DC 20024
(202) 554-8050
(202) 863-5486 (Fax)

MUTCD

Superintendent of Documents
U.S. Government Printing Office
Washington, DC 20402

ADA

Office of the General Counsel
Architectural and Transportation Barriers
Compliance Board
1331 F Street NW, Suite 1000
Washington, DC 20004-1111
(202) 272-5434 (Voice), 272-5449 (TDD)
(202) 272-5447 (Fax)

Design Standards for Low Volume Roads and Streets

Note: This section is adapted from the report, "Guidelines for Low Volume Roads and Streets" developed by the Washington State Association of County Engineers/Public Works Directors.

There is universal agreement among highway, road, and street design professionals at all levels of government on the geometric standards to be applied when constructing or reconstructing high volume (ADT 1000) highway, road or street facilities. There also appears to be at least general agreement on standards and guidelines on facilities with traffic volumes as low as 400 ADT. There is less consensus, however, when it comes to facilities in the low volume category where the ADT is less than 400. It is estimated that well over half the state's 85,000 kilometers of county roads and city streets under the jurisdiction of licensed professional county and city engineers falls in the low volume category. These standards are in response to the need for design guidelines, procedures, and considerations specifically geared to these low volume roads and streets. The types of improvements to which the guidelines apply may be either publicly or privately funded, and either a new construction or reconstruction project.

It should be understood that these standards are directed at substantive improvements, not at so called "spot improvements" that affect only a small portion of a facility, such as an isolated curve or a minor intersection. Spot improvements on a geometrically substandard facility should be evaluated on an individual basis and be designed to blend in with the remaining adjacent features whenever a more extensive improvement cannot be justified.

These standards do not replace any of the previous standards in this document but rather serve as a supplement specifically regarding low volume facilities. The intent of these standards is identical to that of the AASHTO policy, which is "… to provide guidance to the designer by referencing a recommended range of values for critical dimensions. Sufficient flexibility is permitted to encourage independent designs tailored to particular situations." Licensed professional county and city engineers have the necessary background and experience to do such tailoring.

It should be recognized that low volume roads and streets usually serve different functions than freeways and arterials; the demands on them are not the same. To equate them with freeways and arterials would likely lead to overdesign and make them far more costly than need be. Accidents on low volume facilities are relatively rare events. National statistics indicate that on the average road carrying 50 vehicles per day, there is only one accident per year for every 4.3 km[1]. Since accident records show that higher standards do not significantly reduce non-intersection accidents[2], it would not be cost effective to adopt high standards with this expectation.

The decision as to the appropriate design will be based in part on the facility's functional classification. If it is a new facility in the arterial or collector class, every reasonable effort should be made to construct to at least minimum design standards. If it falls into the local access class, there may be justification for a

modified minimum or special design, referred to in the AASHTO Manual under the heading of "Special Purpose Roads." Another excellent source of information regarding design standards for out-of-the-ordinary situations is the United States Forest Service (USFS) Road Preconstruction Handbook, which might be especially helpful for low volume and low speed situations in difficult terrain. When the proposed improvement is on an existing facility, a 3-R type project may turn out to be the only economically feasible solution.

Design Elements and Other Considerations in the Low Volume Road Design Process

Preface

In the following text, each of the major design elements is individually addressed as it relates to low volume road and street design. It should be noted that no single design element stands completely on its own, but that they are directly or indirectly related. The experienced designer will refer to this document and referenced publications in the process of taking a project from the programming to the construction stage.

Economic Analysis

While economic analysis is not in itself a design element, the concept is important when dealing with design of a low volume road and street. While it might be desirable from an engineering viewpoint to construct or reconstruct all improvements to full design standards, the reality is that there are not nearly enough funds available at the local level to do so. Federal fuel tax funds are available for construction on designated arterials only and must be matched with local funds. Most state fuel tax special program funds are similarly earmarked for construction on designated arterials with local matching funds required. No special program funds are available for routine maintenance activities.

The engineer must apply some sort of economic analysis to each project and determine how to strike the best balance among the desired design standards, the safety and mobility of the traveling public, and the available funds. The exact manner in which such an analysis is done is up to the professional judgment and experience of the engineer and should be appropriately documented.

Design Traffic Volume

Roads and streets should be designed for a specific traffic volume range, using either the current average daily traffic (ADT) or projected ADT for some future design year, preferably 20 years hence. Current and future land use trends should also be considered in making these decisions. On low volume facilities, traffic volumes do not normally change significantly for the foreseeable future. In an urban environment, these would typically be relatively short streets that are not likely to be extended. In rural areas, they most likely would be remote agricultural or natural resource access roads where there is little or no likelihood of land use change.

Design Speed

The geometric design features of a low volume facility should be consistent with the design speed appropriate for the facility. This may vary from a low of 30 km/h in mountainous terrain to a high of 100 km/h in flat terrain. It should be noted, however, that the design speed does not necessarily represent the anticipated operating or posted speed.

Sight Distance

The AASHTO Manual contains an exhaustive discussion of the factors and assumptions associated with the calculation of stopping, passing, and intersection sight distance. Stopping sight distance is a vital consideration for both urban and rural situations. Passing sight distance will likely be pertinent only in rural situations where operating speeds are in the 50 km/h and higher range. Intersection sight distance must be considered in light of the terrain in which the facility is located, and in urban situations, to what extent parking is permitted. Where the improvement contemplates some kind of pavement, the simplest approach is to base the design on stopping sight distance, and to control passing and intersection situations with appropriate striping.

Horizontal Alignment

On most low volume road and streets, especially those classified as local access where design speeds are in the 30 to 40 km/h range, short radius curves may be tolerated and the superelevation may not be necessary. On roads where design speeds may run as high as 100 km/h, horizontal alignment becomes a most important consideration. Each individual road or street, however, is unique and must be carefully evaluated to ensure appropriate alignment. The computations involving curve radius and superelevation are important elements in the design process and are well detailed in the AASHTO Manual.

Vertical Alignment

For an urban, curbed, low volume street, the minimum acceptable grade to assure proper drainage is an important consideration. Tolerable maximum grades will vary with road use. A steeper grade may be acceptable on an urban residential street than on a rural road serving heavy trucks. Intersections on steep grades should be avoided whenever possible, especially in areas with recurring snow and ice problems. In urban areas, ease of access for emergency vehicles is also to be considered when establishing grades. For rural projects, AASHTO includes tables of maximum grades related to design speed and terrain. The design of a crest and sag vertical curves is related to design speed and is important in rural projects with higher design speeds. The AASHTO Manual is the best source for this process and for the integration of vertical and horizontal curvature.

Cross Section Elements

The AASHTO Manual and previous standards in this publication contain tables of recommended minimum roadway, pavement and shoulder widths for various design speeds and various levels of ADT, with the low end addressing all volumes below 400 ADT. It is recognized, however, that there are thousands of kilometers of both rural and urban roads and streets on which traffic volumes fall even below 150 ADT. In this category, there may be unique situations for which the engineer can justify and use somewhat lesser widths than those suggested by AASHTO. An example of such lesser widths is shown in the table below.

Typical Roadway Width
Two-Lane Low Volume Roads and Streets
Based on Design Year ADT

Design Elements	**ADT 150-400 All Design Speeds**		**ADT Below 150**					
			Speeds Above 60 km/h		Speeds Below 60 km/h			
							Trucks Below 10%	
Functional Class	Coll.	Acc.	Coll.	Acc.	Coll.	Acc.	Coll.	Acc.
Roadway Width(1)	7.2 m	7.2 m	7.2 m	6.6 m	6.6 m	6.0 m	6.0 m	5.4 m

(1)Roadway width is the distance from outside of shoulder to outside of shoulder regardless of surface and shoulder type. An additional 2.4 m should be added for parking wherever it is to be permitted.
(2)The 1991 Uniform Fire Code requires an unobstructed width of 6 m for any road providing access to a building, subject to certain exceptions that may be approved by the local fire authority. WAC 51-24-10201 states that "Fire apparatus access road shall be provided and maintained in accordance with locally adopted Street, Road, and Access Standards."

Drainage

All roadways must have adequate crown or adequate cross-slope to get water off the roadway. Careful cross-slope design is especially important at the ends of horizontal curves with superelevation and at intersections. The size and shape of drainage ditches will depend on the amount of runoff and the type of soils in which the road is being built. It must also be recognized that the drainage ditch and headwalls are usually in the clear zone, or recovery area, which is an important roadway safety feature. When there are curbs and gutters, especially where grades are at or near recommended minimums, the location and design of inlets becomes most important.

Clear Zone

The designer must be aware of the extensive tables of recommended clear zone distances both in the AASHTO and LAG Manuals. It must also be recognized, however, that serious accidents on low volume roads, especially on those below 150 ADT, are rare occurrences. At this low end of the scale, the cost of providing the recommended clear zone may be prohibitive. Research[4] undertaken to re-evaluate the safety needs on low volume rural roads states that the suggested values for side slopes and clear zones should be recognized as idealistic objectives and that a more realistic approach to roadside safety on low volume roads should depend on achieving a balance between the cost and the safety effectiveness of the design treatment.

It is further stated that, while the application of such an analysis to low volume roads indicates that individual roadside safety treatments yield very small safety contributions, some low cost improvements do appear to be cost effective,[5] especially on the outside of curves. The removal of certain trees and relocation of utility poles are recommended. Also cited as being cost effective are the placement of guardrails on steep slopes, removal of unnecessary guardrails on flat slopes, and the flattening of steep but low embankments. In this regard, it is most important that the designer be aware not only of pertinent published recommendations, but also of research done subsequent to their adoption. In the final analysis, the designer must apply his or her own professional judgment in making the final design decisions and be prepared to defend and justify them if necessary.

Guardrail

If it has been established that a guardrail is justified on a particular improvement the designer must determine the best location, type of construction, and post-spacing that would be most appropriate for the function and anticipated traffic volume of the facility. The designer should be aware that warrants and designs developed for high volume, high speed facilities are not necessarily appropriate for low volume and/or low speed locations[6].

Utilities

All utility structures and appurtenances that extend above the surface of the road right-of-way are a potential hazard to users of the facility and should be located near the edge of the right-of-way, especially in rural locations with higher speeds of travel. In an urban environment on curbed streets with lower speeds, the face of utility poles may be located to within 0.5 m of the curb face. When a project involves reconstructing an existing facility in a restricted corridor, where additional right-of-way is prohibitive or impossible to acquire and existing utility structures must be accommodated, a joint effort by the roadway and utility designers will be needed to assure that a safety-sensitive design has been achieved.

Railroad Crossings

The roadway width across a railroad should be the same as the roadway width on each side of the crossing. Appropriate grade crossing controls should be provided (including advance warning signs) commensurate with the design speed of the facility and the sight distance required. Maximum practicable sight distance at the crossing itself is desirable, especially on a mainline crossing where train speeds are high.

Miscellaneous Considerations

- Roadway approaches, public or private, should be designed to provide adequate sight distance in both directions on the facility being accessed, and should not interfere with drainage.
- ADA facilities are not normally associated with low volume roads and streets, except that in an urban development with sidewalks and curbs, the appropriate wheelchair ramps should be provided at intersections. The designer should be aware of the requirements of the Americans with Disabilities Act.
- Bicycle facilities would not normally be expected in a low volume environment, unless the facility is part of an adopted bicycle trail plan. It may then be desirable to provide a widened shoulder and appropriate drainage grates.
- Pedestrian facilities should be provided where significant numbers of children are walking to or from school, or where other pedestrian traffic warrants.
- Truck turning radii as detailed in the AASHTO Manual should be provided where significant volumes of heavy trucks are expected.
- Bus pullouts would not normally be part of a low volume project design, but certainly may be provided in case of special need.

References

[1]"Highway Safety Requirements for Low Volume Roads, John C. Glennon, Transportation Research Record 702, 1979.

[2]"Economics of Design Standards for Low Volume Roads," C. H. Oglesby, NCHRP Report 63, 1969.

[3]"Designing Safer Roads, Practices for Resurfacing, Restoration, and Rehabilitation," Special Report 214, Transportation Research Board, 1987.

[4]"Highway Safety Requirements for Low Volume Rural Roads," John C. Glennon, Transportation Research Records #702, 1979.

[5]"Design and Traffic Control Guidelines for Low Volume Rural Roads," John C. Glennon, NCHRP Report 214, 1979.

[6]"Guidelines for Guardrail on Low Volume Roads," Virginia Transportation Research Council, 1990.

[7]1993 AASHTO Guide to Metric Conversion.

3M:P:LAG4

43.1 General Discussion

On all Federal Highway Administration (FHWA) funded transportation projects, local agencies must document location and design approval prior to preparation of plans, specifications, and estimates (PS&E).

As explained in Chapter 13, Becoming Certified, when an agency operates under Certification Acceptance (Chapter 13), the approving authority for design is the local agency. The Assistant Secretary for TransAid may delegate responsibilities for project administration to the Regional TransAid Engineer on a case-by-case basis.

A project design shall not be approved until the project's environmental considerations have been approved by FHWA, and its public hearing requirements have been met.

For all but the largest and most complex projects, the Project Prospectus serves as the Location and Design Report and approval. Where the prospectus adequately covers the items required for design approval, the local agency may approve the design using the prospectus in lieu of a Design Report.

For high cost and major projects, a value engineering study should be performed and the results or summary included in the Design Report.

When there is a subsequent change to the project design or scope, an amended location-design approval is required.

43.2 Requirements for Design Approval

The items listed below, required for design approval, are normally included in the Project Prospectus. If the project is very large or complex (see Section 43.44), the local agency should prepare a separate Design Report that discusses project objectives, design criteria, and alternatives in greater depth than is possible in a prospectus. Examples of Design Reports and assistance in preparing them may be obtained from the Regional TransAid Engineer. This guidance is provided especially for those CA agencies that only have occasional FHWA funded projects.

.21 Traffic Data. Design-year ADT, the average daily traffic forecast during the design year should be included. The design year may be any point within 8 to 20 years from the projected start of construction.

.22 Right-of-Way. Refer to Chapter 25, Right-of-Way Procedures.

.23 Horizontal-Vertical Alignment. A plan showing the proposed horizontal alignment, existing streets, and proposed intersections shall be included. Show only sufficient detail to generally portray the scope of the project. If there is little change in the profile, do not include a profile. If there is significant change, furnish a profile showing existing and recommended vertical alignments.

.24 Roadway Section. Provide typical roadway sections for each general type of roadway in the project. This is not required on signal projects if the lane description has been shown.

.25 Pavement Design Criteria. Rationale for selection of the pavement type and depth of surfacing.

.26 Cost Estimate. The costs submitted shall be included for the Project Prospectus and the Local Agency Agreement shall be used.

.27 Environmental Considerations. Documentation, including approval by FHWA.

.28 Hearing Data. Reviewing the above documentation, the local agency will determine whether the design is in conformance with all requirements. If the design is in conformance, if the necessary environmental actions (Chapter 24) have been completed and approved by FHWA, and if public hearing requirements have been met, the local agency will grant and publish design approval (see Appendixes 43.71 and 43.72).

.29 Permits. Refer to Chapter 24, Federal Environmental Process, and Appendix 44.68 for a sample list of permits that may be required.

43.3 Bridge Design Approval

.31 Policy.

a. The bridge site data should be prepared in conjunction with the Design Report. Extensive structural studies and the preparation of the bridge preliminary plans during the Design Report phase is not recommended. Expected changes to the roadway geometrics, project staging, construction costs, and other conceptual data will affect the structure and, therefore, impact the structural design effort.

b. For bridge projects that do not fall under categories described in c. or d. below, the local agency is the approving authority for location design.

c. For bridge projects that fall under the category of "major or unusual," the Assistant Secretary for TransAid approval is required at the preliminary "Type, Size, and Location" (TS&L) stage. (The FHWA regulatory requirements for large or unusual bridges contained in the *Federal Aid Policy Guide* (FAPG) also apply to large or unusual structures, tunnels, or hydraulic facilities. The definitions and requirements for major or unusual bridges will be addressed below; for other cases, refer to the FAPG.)

d. For bridge projects on state routes and for any local agency bridge project that will be advertised and awarded by the Washington State Department of Transportation (WSDOT), design approval by the Assistant Secretary for TransAid is required.

.32 Definitions. A "major bridge" is a bridge estimated to cost more than $5 million. This criterion applies to individual units of separated dual bridges. An "unusual bridge" is a bridge involving difficult or unusual foundation problems, new or complex designs with unusual structures or operational features, or a bridge for which the design standards or criteria might be questionable.

.33 Submittal of Data. Refer to Section 34.42.

The Assistant Secretary for TransAid approval of TS&L is required for major or unusual bridges before the local agency may approve the design and before the local agency may begin preparing the final PS&E.

.34 Bridges on State Right of Way. Bridge projects designed and constructed by a local agency within state right-of-way are to have a WSDOT representative assigned by the Regional Administrator to serve as the Project Coordinator and WSDOT contact for all aspects of the project. This person is to assist in reviews by the Bridge Office and others and to ensure that adequate coordination between the local agency, region, and service center offices take place at each appropriate stage.

All pertinent review data submitted to the local agency by the Bridge Office concerning constructability, safety, aesthetics, or use of the bridge by the motoring public will be forwarded to the local agency through the Project Coordinator with a copy to the TransAid Operations Engineer.

Local agencies, WSDOT, the Bridge Office, and other appropriate WSDOT representatives are to hold an early coordination meeting. Members present are to agree upon a list of key expectations and milestones that include but are not limited to: pre-scoping prior to consultant selection, design report review, prospectus stage, agreed upon periodic stage reviews of bridge plans, aesthetics, and selection of structure type. The WSDOT Project Coordinator is to ensure that all members reach agreement on the milestones and then collectively adjust or adhere to them.

43.4 Value Engineering

.41 Definition. Value Engineering (VE) is the systematic application of recognized techniques, by multidisciplined team(s). These techniques are:

- identify a product's function or service;
- establish a function's monetary value or worth;
- provide alternate ways, using creative techniques, to reliably accomplish necessary functions in the most effective and efficient manner.

Reducing the scope of a project, compromising the performance of an element, or simply substituting cheaper materials is not VE. VE is not just "good engineering." It simply answers the question, "What else will accomplish the purpose of the product, service, or process we are studying?" All costs are taken into account over the entire life of the project.

.42 Authority for VE. Paragraph 4b of DOT Order 1395.1 Use of Value Engineering (VE) by the U.S. Department of Transportation, dated April 13, 1987, provides: "All DOT grant awards for major transportation projects should strongly encourage the use of VE in the planning, design, and/or construction phases. This may include the use of VE incentive clauses in construction contracts."

.43 Why VE is Needed. The costs of highway needs far exceed the funds available for improvements. As the cost of highway construction increases, more emphasis is being placed on the maintenance and rehabilitation of existing facilities to maximize these available funds.

VE is a tool that can counteract these growing problems by providing (1) cost reduction, (2) product or process improvement, and (3) alternative means and materials for highway construction and maintenance.

.44 VE Application (General). VE may be applied at any point in highway development, operation, and maintenance. For maximum effectiveness, however, VE should be undertaken as early as possible (during the first 30 percent of design) when decisions on life-cycle costs are being made and valid project development recommendations can be implemented. When a complex, costly project is selected as a candidate for potential cost reductions, investigations should start as soon as a preliminary estimate is in hand.

VE should be employed when the ratio of potential savings to the cost of the VE study is significant. VE can also be used in evaluating standard details that are used repetitively on many projects. The cost of VE studies in preconstruction activities may be allocated to the preliminary engineering cost of the related project.

Local agencies are also encouraged to include a VE incentive clause in their construction specifications; such clauses encourage contractors to propose changes to the contract that fulfill a project's function requirements at less cost.

It is recommended that the local agency staff prepare a "VE Assessment Report" (Appendix 43.73) for all projects exceeding $2 million in total cost, or any other project determined by the staff to warrant a report. The report will address the project characteristics, cost per kilometer, potential savings of high cost items, and other considerations unique to the project. From this assessment, a recommendation will be developed as to whether a VE study is needed. If the local agency decides that a VE study should not be performed, the reasons should be documented.

When the local agency determines that a VE study should be performed, they should use the references listed in Section 43.48. The study results of the VE team should be included in the design report submitted to the Regional TransAid Engineer along with the agency's recommended alternative.

When an alternative is acceptable to the local agency and WSDOT, the local agency submits a project prospectus to the Regional TransAid Engineer. The project then proceeds as defined in this manual.

.45 VE Application (Bridge Projects)

a. Selection Process for VE Study. After the Bridge Replacement Advisory Committee (BRAC) recommends bridge projects for funding, a review of possible strategies (closure, repair, rehabilitation, or replacement) is done for those bridges identified for C3R review discussed in Chapter 34. This begins the process for identifying bridge projects for which a formal VE study may be desirable in order to define cost-effective alternate designs.

C3R review findings will be reviewed by the TransAid Operations Engineer in coordination with the local agency and the Regional TransAid Engineer. Based on these findings, the TransAid Operations Engineer will recommend to the Assistant Secretary for TransAid whether a VE study should be undertaken.

The Assistant Secretary for TransAid makes the final decision in consultation with the local agency.

.46 VE Coordinator. When the decision is made to proceed with a VE Team analysis, the TransAid Operations Engineer will be the VE Coordinator.

The VE Coordinator will:

a. Inform the local agency in writing that a VE Study Team is being formed.

b. Reach agreement with the local agency on the time and place for the study. Select the VE Team Facilitator and the other members of the VE Team.

c. Request that the local agency provide the typical project related information, the name of the local agency's VE Team member, and the name of a local agency contact person (not the VE Team member) who will be responsible for providing facility and equipment related items required by the VE Team. The local agency team member should be an unbiased representative who would normally have no direct involvement in the project.

.47 VE Study Team. The VE Study Team will be headed by a qualified facilitator not employed by the local agency. The duties and responsibilities of the facilitator will include, but are not limited to, the following:

a. Acts as chairperson at meetings of the VE Team.

b. Presents the findings and recommendations of the VE study to the local agency management and other interested agencies.

c. Provides the final VE Study Report to the local agency and the WSDOT Assistant Secretary for TransAid.

The VE Team will be comprised of five (5) members including the facilitator. One team member should have a background in bridge design or construction. If environmental factors are part of the study process, then the team should also include a member who has expertise on environmental issues. All VE Team charges will be billed to the local agency.

The VE Team will formally present their study results to local agency representatives, WSDOT TransAid, and all other interested persons. Team findings and recommendations will then be documented in a formal report and sent to the local agency as soon as possible. Courtesy copies are sent to other appropriate agencies and individuals.

The local agency will evaluate the VE Team recommendations. Should their preferred alternative differ from the prospectus or if no project prospectus has been approved, the local agency submits a new or revised prospectus for their preferred alternative to the Regional TransAid Engineer. A summary of the VE study results should be included in this transmittal as reference material. The project then proceeds as defined in this manual.

.48 Reference Materials

- *Value Engineering Guide for Cities and Counties*, Kempter-Rossman International.
- *Operating Tip — Value Engineering*, NWT^2 Center, October 1985.
- *Value Engineering Contract Provisions on Federal Aid Highway Construction Projects*, Report No. 75-84-217, FHWA, December 1984.
- *Pavement and Shoulder Maintenance Performance Guide*, Report No. TS-84-208, FHWA, August 1984 (Developed in conjunction with Arkansas, Colorado, Iowa, New Mexico, North Dakota, South Dakota, Utah, and Washington).
- *Value Engineering for Highways*, prepared for FHWA by Kempler-Rossman International, revised October 1983.
- *Value Engineering Conference Summary Report*, Report No. TS-80-246, FHWA, August 7, 1980.
- *Value Engineering — A Systematic Approach*, Arthur E. Mudge, McGraw-Hill, New York, 1971.
- *Value Engineering in the Construction Industry*, Alphonse J. Dell'isola, Construction Publishing Co., Inc., New York, 1974.

- *Guidelines for Value Engineering (VE)*, subcommittee on New Highway Materials, AASHTO-AGC-ARTBA Joint Cooperative Committee. Reprinted by USDOT/ FHWA February 1983.

43.5 Additional Data Required for Special Projects

.51 Traffic Signal Projects. The local agency shall provide warrants for signalization in accordance with Part 4c of the *Manual on Uniform Traffic Control Devices* (MUTCD). Designs for signalization at intersections with state routes require review by WSDOT. A signal permit is required for all traffic signals on state routes. An early application to the WSDOT Regional Administrator is advisable.

.52 Projects Involving State Routes. Designs for all projects involving state routes shall be submitted to the Regional TransAid Engineer for approval. All work at intersections with state routes requires submittal of an intersection plan to the Regional TransAid Engineer for approval. Prints of existing intersection plans are available from WSDOT. Revisions should be shown on these prints.

43.6 Design Approval Notices

If hearings are held or if the opportunity for a hearing has been afforded, the local agency will publish a notice of design approval. The notice is published after the hearing has been held (or the opportunity offered) and after the design has been developed and approved. Its purpose is to inform interested parties of action taken in response to their comments or concerns.

The notice is published in the same manner as the hearing notice and should include the following:

a. A description of the location or design.

b. A map or sketch of the area involved.

c. A statement announcing that maps, sketches, and other supporting documentation are available to the public at a convenient location.

43.7 Appendixes

43.71 Sample Request to Publish Notice of Design Approval

43.72 Sample FHWA Project Notice of Approval of Location and Design

43.73 Sample Format — VE Assessment Report

7:P:LAG4

Sample Request to Publish Notice of Design Approval

_____
_____
_____
_____

_____
_____
_____
_____

Gentlemen:

Please publish one time only the attached Notice of Approval of Location and Design for the project referenced above.

It is further requested that you send to this office three (3) copies of an affidavit of publication, together with your billing in triplicate.

Please mail the affidavits and invoices to:

(Address of Approving Authority)

Very truly yours,

_____
Approving Authority

Attachment

Sample FHWA Project Notice of Approval of Location and Design

The (Agency Name) does advise that the (Approving Authority on CA Agreement) has approved the following described Location and Design on _____ in _____ Agency.

The project _____ (Termini)

The proposed project provides for

All maps and data concerning this project are available for public inspection at the office of the _____ Agency Engineer, _____, Washington.

This notice is in conformance with Federal Aid Highway Act, 23 U.S.C. 101 et. seq., 128, 315, section 2(a), 2(b)(2), and 9(e)(1) of the Department of Transportation Act, 49 U.S.C. 1651(a) and (a)(2), 1657(e)(1); 49 CFR SS 1.4(c); and 23 CFR SS 1.32.

_____
Approving Authority

Sample Format — VE Assessment Report

Agency: _____ Date: _____

Project: _____ Project #: _____

Project Limits: _____

Reviewing Team: _____

Project Characteristics

Length: _____ Cost: $_____ Cost/Unit Length: $_____

Major structure (Y/N) ____
Extensive R/W (Y/N) ____
Complex project (Y/N) ____
Includes items that appear too costly (Y/N) ____
Includes critical or expensive materials (Y/N) ____

Includes items that have questionable, complex, or costly function (Y/N) ____
Includes items difficult to construct (Y/N) ____
Complicated or costly traffic control or detours (Y/N) ____

Horizontal Alignment: _____

Vertical Alignment: _____

Materials Source: _____

Design Concept: _____

Other Considerations: _____

Other Alternatives Considered: _____

Major High Cost Items and Potential Cost Saving Ideas	Cost	Potential Savings
(1) _____	$_____	$_____
(2) _____	$_____	$_____
(3) _____	$_____	$_____

Conclusions and Recommendations: _____

Approving Authority Recommendations: _____

44.1 General Discussion

After a project's location and design have been approved, work begins on the final version of its plans, specifications, and cost estimates (PS&E). These documents are used to award and administer a construction contract. The PS&E must be approved as defined in Chapter 13, Becoming Certified to Administer FHWA Projects, before the project can be advertised for construction.

PS&E approval is done by the local agency as identified in the Washington State Department of Transportation (WSDOT)/ Local Agency Certification Acceptance (CA) Agreement. The approving authority identified on the CA Agreement must approve the plans and specifications, and a professional engineer licensed in the state of Washington must seal and date the plans and specifications.

The local agency should use the Project Development Checklist (Chapter 14, Developing Projects Using Local Agency Guidelines) to check for completeness of the contract plans prior to approving them.

The local agency should have a commitment file, when applicable, containing a summary of commitments made during project development. The file should be reviewed to ensure that the commitments are incorporated in the PS&E. These commitments typically involve right-of-way or environmental considerations (see Appendix 44.68 for list of possible required permits).

A copy of the bid documents should be furnished to Regional TransAid Engineers prior to advertisement for a check of completeness.

Any local agency project with work on state routes shall obtain PS&E approval from WSDOT.

On state ad-and-award projects, WSDOT will review and approve the PS&E prior to printing contract plans. An estimate of the cost of this service can be obtained from the Regional TransAid Engineer. Refer to forms for a checklist.

44.2 PS&E Requirements

.21 Wage Rates. For information on state law requirements, contact the Municipal Research and Services Center for a listing of current laws. State and federal wage rates must be included for all Federal Highway Administration (FHWA) projects advertised by a local agency. The wage rates used will reflect the latest rates approved by the Washington State Department of Labor and Industries (L&I) and the U.S. Department of Labor. Refer to CFR 29 part 30 and RCW 39.12 and RCW 49.28.

The Federal Davis-Bacon Act predetermined minimum wage must be paid to all covered workers on federal aid projects exceeding $2,000 that are located on a federally classified highway. The Davis-Bacon requirements do not apply to force account work performed by agency forces.

If a project is located on a federally classified minor collector or below and is funded through either the bridge (BR), safety (HES) or enhancement category, the project is not subject to the federal wage rate requirement only the State law.

The applicability of Davis-Bacon to a transportation enhancement project is dependent on the relationship or linkage of the project to a federal aid highway. If the project is "linked" to a federal aid highway based on proximity or impact (i.e., without the federal aid highway the project would not exist), then Davis-Bacon requirements apply. Examples of such projects include the removal of outdoor advertising, a wetland to filter highway drainage, etc.

If the project is not "linked" to a particular federal aid highway and is eligible based solely on function (i.e., a transportation facility, such as an independent bike path, the restoration of a railroad station, etc.), then the Davis-Bacon requirements do not apply. However, the Davis-Bacon requirements apply to all projects greater than $2,000 that are physically located within the existing right-of-way of a federal aid highway, regardless of the transportation enhancement characteristics.

Another Davis-Bacon issue is the acceptability of using volunteer labor on transportation enhancement projects. The Department of Labor states in its Field Operations Handbook (Section 15): "There are no exceptions to Davis-Bacon coverage for volunteer labor unless an exception is specifically provided for in the particular Davis-Bacon Related Act under which the project funds are derived." The Davis-Bacon Related Act for the Federal Aid Highway Program (23 U.S.C. Section 113) is silent on this subject. Therefore, on transportation enhancement projects subject to Davis-Bacon coverage, a contractor or subcontractor may not use volunteer labor. On the other hand, a state highway or local government agency may use volunteer laborers under their direct control as a force account effort.

Local agencies that have phone access to the WSDOT mainframe computer in Olympia may access the Wage Rate data file. If a local agency is not "on line," wage rates can be requested through the Regional TransAid Engineer. Use the "Wage Rates Request Form" when making your request.

The effective date for state and federal rates is determined as follows:

a. State Wage Rates. L&I will use the date that bids are due as the effective date for determining prevailing wages provided that the contract is awarded within 60 days after bids are due (RCW 39.12). If the contract is not awarded within 60 days after bids are due, L&I will determine the prevailing wage on the date the contract is awarded.

b. Federal Wage Rates. This data is received from the USDOL in a document entitled "General Wage Determinations Issued Under the Davis-Bacon and Related Acts." Modifications are issued weekly by the USDOL. The effective date for federal wage rates is the date of notice in the Federal Register or the date on which written notice is received by WSDOT, whichever occurs first. All modifications on projects to which the determination applies are effective if published before contract award. The following are exceptions:

- The effective date for determining state prevailing wage rates shall be the date of bid opening. For contracts awarded more than six months after the bid opening date, the effective date for determining the wage rates shall be the award date.
- The effective date for determining federal prevailing wage rates shall be ten days prior to bid opening (or less if the engineer determines an addenda can be issued prior to bid opening). For contracts awarded more than 90 days after the bid opening date, the effective date for determining the wage rates shall be the award date.

  Prior to bid opening, the local agency may contact the Support Systems Engineer in the Plans Branch of WSDOT at (360) 705-7455, to see if wage rates have changed or pending.

  To minimize the possibility of out-of-date state and federal wage rates at the time of bid opening, the wage rates should be requested from the Regional TransAid Engineer seven days before the advertising date.

.22 Other Requirements.

a. Form FHWA-1273. Each set of contract documents shall include Form FHWA-1273, "Required Contract Provisions, FHWA Construction Contracts," and such amendments that modify the FHWA-1273. Copies of the FHWA-1273 Form and amendments are available from the Regional TransAid Engineer.

b. Affirmative Action. See Chapter 27, Equal Employment Opportunity and Training.

c. DBE. In accordance with FHWA and WSDOT efforts to increase DBE (Disadvantaged Business Enterprises) participation in FHWA projects, WSDOT has developed a management-by-objective goal-setting process for DBE participation. For additional information, see Chapter 26, Disadvantaged Business Enterprises.

d. "Buy-America" Requirements. Steel that is permanently incorporated into the project shall consist of American-made materials, as outlined in the *Standard Specifications*, Division 1-99, Section 1-06.5, and any required GSP.

   The local agency must include a provision containing the "Buy-America" requirements in each contract. General Special Provisions similar to those now used by WSDOT can be used by the local agency. These general special provisions are included in the WSDOT *Amendments and General Special Provisions p*ublication.

e. Traffic Control Plans. Traffic Control Plans (TCP) shall be consistent with Part VI of the MUTCD and shall be referenced in the contract documents.

f. Certification on Lobbying. Section 319 of Public Law 101-121 (Department of the Interior and Related Agencies Appropriations Act for Fiscal Year 1990) establishes a prohibition on using federal funds for lobbying efforts.

   The law prohibits recipients or any lower tier subrecipients of a federal contract, grant, loan, or cooperative agreement from expending federal funds to pay any person for influencing or attempting to influence a federal agency or Congress in connection with the awarding of any federal contract, the making of any federal grant or loan, or the entering into of any cooperative agreement. The extension, continuation, renewal, amendment, or modification of any federal contract, grant, loan, or cooperative agreement is also covered as follows:

   - Federal aid contractors and consultants, as well as lower tier subcontractors and subconsultants, are subject to the lobbying prohibition. To assure compliance, a certification provision (see forms) shall be included in all federal aid construction solicitations, contracts, and consultant agreements exceeding $100,000 in federal funds. Implementation of this requirement shall begin with PS&E and consultant agreement approvals.

   Local agencies, RTPOs, MPOs, and any other subgrantees (exclusive of Indian tribes and tribal or Indian organizations) which receive federal funds in excess of $100,000 from a federal aid grant, shall execute a certification and, if required, submit a completed disclosure form prior to receipt of such funds (see forms).

g. Justification for nonparticipating work items, if included in the contract (tied bids), must be approved by the local agency. Combining of bid items shall not increase the cost of the federally funded project.

h. Justification for the use of agency-supplied materials must be documented by the local agency. The materials must have been produced by agency forces or acquired through competitive bidding. Material purchased from a sole source may be used only with justification by the CA Agency.

.23 Local Ad and Award Projects. See Chapter 46.

.24 State Ad and Award Projects. See Chapter 45.

44.3 Contract Plans

For state ad-and-award projects, the plans should be prepared in accordance with the WSDOT *Plans Preparation Manual* (M 22-31). For local ad-and-award projects, there are no federal or state requirements for plan sheet size or guidelines for preparing contract plans.

For both state and local ad-and-award projects, the plans shall carry the seal and signature of a registered Professional Engineer, in accordance with RCW 18.43.070.

44.4 Specifications

WSDOT publishes and distributes the *Standard Specifications*, and the *Amendments and General Special Provisions*.

.41 *Standard Specifications*. All FHWA funded projects, including local agency force projects, will be constructed in conformance with the current combined WSDOT and APWA *Standard Specifications for Road, Bridge, and Municipal Construction*, and such amendments that modify these specifications.

.42 Amendment to the *Standard Specifications*. These amendments are approved changes to the S*tandard Specifications.*

.43 General Special Provisions. These are specifications that describe special project features in common usage.

.44 APWA Amendments. These are specifications unique to local agency projects.

.45 Special Provisions. Since Special Provisions are specifications governing matters peculiar to an individual project, they are not covered in the *Standard Specifications*. Their use should be held to a minimum and applicable *Standard Specifications* should be used instead. Issues mandated in the state and federal laws shall not be changed.

Special Provisions are required:

a. For the presentation of all features of a project not covered by the S*tandard Specifications* and *General Special Provisions*.

b. Where the *Standard Specifications* are being amended.

c. For any deviation from the *Standard Specifications* with regard to materials, construction details, measurement, and payment.

d. When noted in the WSDOT Standard Item Table.

The following paragraphs discuss some pertinent aspects of special provisions.

- All nonstandard pay items shall be covered in the Special Provisions.
- For high cost and major projects, the local agency is encouraged to include a value engineering incentive clause in their construction specifications encouraging the contractor to propose changes in contract requirements that will accomplish the project's functional requirements at less cost.
- Traffic control must be in accordance with the MUTCD. A Special Provision shall be prepared outlining traffic control requirements and including any pay items.
- Neatline measurement of quantities is allowed by special provision. This specification may allow payment of the neatline measurement from the lines and grades as shown on the plans or as directed by the Engineer's stakes on the ground. This may apply to aggregates, base course, and surfacing. On asphalt quantities, the unit price could include the cost of coring to verify density and depths. Culvert and pipeline installation may be paid by the lineal foot-in-place with bedding, backfill, and compaction as incidental to the unit price. In these instances, an item should be added for extra excavation or backfill if the profile varies or is subject to change during the contract. Shoring must be paid as a separate bid item.
- Direct reference to proprietary specifications of national, regional, or local trade associations should not be included in FHWA contract specifications; such proprietary specifications are subject to change without notice to, or acceptance by, the state or FHWA. If proprietary specifications must be used, the complete text, or such parts as are applicable, should be incorporated into special provisions for the project.
- The use of trade names in specifications and on plans should be avoided. Instead, specifications should be formulated to assure full opportunity for competition among equivalent materials, equipment, and methods. References in specifications and on plans to single trade-name materials require justification. However, where satisfactory specifications based on laboratory tests or other performance requirements cannot be developed or obtained from organizations which develop specifications, a CA Agency may use trade name designations, provided that at least three names of acceptable materials or products, if available, are listed. Experimental and research items require FHWA approval.

44.5 Estimates

The engineer's estimate of a proposed project's cost shall include the estimated quantity and estimated unit price for each proposed work item. Bridge items shall be segregated from roadway items. A tabulation for each bridge showing its applicable items shall be submitted.

If materials salvaged from the project are to be used for roadway purposes, the value of such materials should not be included in the project cost.

The estimate shall separately list the costs of nonparticipating items, local agency force work, and local agency furnished materials.

The separate cost groups shall be summarized and totaled on the first sheet of the estimate.

The Regional TransAid Engineer may be contacted for assistance in preparing the estimate. A sample estimate is shown in Appendix 44.66.

44.6 Appendixes

44.61 Sample Invitation to Bid

44.62 Sample Proposal (Metric/English)

44.63 Sample Contract

44.64 Sample City Letter of Financial Responsibility

44.65 Sample County Letter of Financial Responsibility

44.66 Sample Estimate and Grouping (Metric/English)

44.67 Instructions for Accessing WSDOT's Mainframe Computer to Obtain Wage Rate Information

44.68 Permits

Forms

FHWA Form 1273 Required Contract Provisions, FHWA Construction Contracts

Plan Preparation Checklist

DOT Form 221-008A Wage Rate Request Form

FHWA Form LLL Disclosure of Lobbying Activities

DOT Form 272-006A Contract

DOT Form 271-015 Subcontractor List

DOT Form 272-056A Disadvantaged Business Enterprise Utilization Certification

DOT Form 272-036D Proposal

11:P:LAG4A

INVITATION TO BID

LOCAL AGENCY'S LETTERHEAD

DEPARTMENT OF ENGINEERING

WASHINGTON

Sealed bids will be received by the (Local Agency), at the reception desk located in Room _____ of the _____, Washington until _____ a.m. on _____ and will then and there be opened and publicly read for the construction of the improvement(s).

All bid proposals shall be accompanied by a bid proposal deposit in cash, certified check, cashier's check, or surety bond in an amount equal to five percent (5%) of the amount of such bid proposal. Should the successful bidder fail to enter into such contract and furnish satisfactory performance bond within the time stated in the specifications, the bid proposal deposit shall be forfeited to the (Local Agency).

Maps, plans, and specifications may be obtained from this office upon payment of the amount of $_____.

Informational copies of maps, plans and specifications are on file for inspection in the Office of the Local Agency Engineer, (Local Agency), Washington.

The following is applicable to federal aid projects.

> **The (Local Agency) in accordance with Title VI of the Civil Rights Act of 1964, 78 Stat. 252, 42 U.S.C. 2000d to 2000-4 and Title 49, Code of Federal Regulations, Department of Transportation, subtitle A, Office of the Secretary, Part 21, nondiscrimination in federally assisted programs of the Department of Transportation issued pursuant to such Act, hereby notifies all bidders that it will affirmatively insure that in any contract entered into pursuant to this advertisement, disadvantaged business enterprises will be afforded full opportunity to submit bids in response to this invitation and will not be discriminated against on the grounds of race, color or national origin in consideration for an award.**

The improvement for which bids will be received is described below:

Bid Opening of

*This bolded paragraph cannot be reworded for FHWA funded projects.

12 kilometers of Laramie County Road, North Ridge Road
Project No. STPUL-6969(007)
STA. 8+658.50 to STA. 9+054.70 (English)

		PREPARATION		
1.	LUMP SUM	Mobilization	LUMP SUM	= _____
2.	LUMP SUM	Clearing and Grubbing	LUMP SUM	= _____
		GRADING		
3.	780.0 m^3	Roadway Excavation Including Haul	PER m^3	= _____
4.	413.0 m^3	Embankment Compaction	PER m^3	= _____
		STORM SEWER		
5.	12.0 EACH	Adjust Manhole	PER EACH	= _____
6.	24.0 EACH	Adjust Catch Basin	PER EACH	= _____
		SURFACING		
7.	28,870.0 TONNE	Gravel Base	PER TONNE	= _____
8.	6,500.0 TONNE	Crushed Surfacing Top Course	PER TONNE	= _____
		LIQUID ASPHALT		
9.	10.0 TONNE	Asphalt Tack Coat	PER TONNE	= _____
		CEMENT CONCRETE PAVEMENT		
10.	289.0 m^2	Cement Concrete Driveway 14 Day	PER m^2	= _____
		ASPHALT CONCRETE PAVEMENT		
11.	10,283.0 TONNE	Asphalt Concrete Pavement Class B Including Paving Asphalt	PER TONNE	= _____
		EROSION CONTROL AND LANDSCAPING		
12.	410.0 m^3	Topsoil Type B	PER m^3	= _____
		TRAFFIC		
13.	13,073.0 LIN. m	Cement Concrete Curb and Gutter	PER LIN. m	= _____
14.	19.5 HUNDRED	Lane Marker Type 1	PER HUNDRED	= _____
15.	2.1 HUNDRED	Lane Marker Type 2	PER HUNDRED	= _____
16.		One-Way Piloted Traffic Control	5,000.00 ESTIMATED	= _____
17.	600.0 HOUR	Labor for Traffic Control	12.00 PER HOUR	= _____
		OTHER ITEMS		
18.	2,000.0 LIN. m	Reconstruct Wooden Fence	PER LIN. m	= _____
			TOTAL _____	= _____

12 kilometers of Laramie County Road, North Ridge Road
Project No. STPUL-6969(007)
STA. 8+658.50 to STA. 9+054.70 (English)

		PREPARATION		
1.		Mobilization		= _____
	LUMP SUM		LUMP SUM	
2.		Clearing and Grubbing		= _____
	LUMP SUM		LUMP SUM	
		GRADING		
3.	780.0	Roadway Excavation Including Haul		= _____
	CU. YD.		PER CU. YD.	
4.	413.0	Embankment Compaction		= _____
	CU. YD.		PER CU. YD.	
		STORM SEWER		
5.	12.0	Adjust Manhole		= _____
	EACH		PER EACH	
6.	24.0	Adjust Catch Basin		= _____
	EACH		PER EACH	
		SURFACING		
7.	28,870.0	Gravel Base		= _____
	TON		PER TON	
8.	6,500.0	Crushed Surfacing Top Course		= _____
	TON		PER TON	
		LIQUID ASPHALT		
9.	10.0	Asphalt Tack Coat		= _____
	TON		PER TON	
		CEMENT CONCRETE PAVEMENT		
10.	289.0	Cement Concrete Driveway 14 Day		= _____
	SQ. YD.	PER SQ. YD.		
		ASPHALT CONCRETE PAVEMENT		
11.	10,283.0	Asphalt Concrete Pavement Class B		
	TON	Including Paving Asphalt		= _____
			PER TON	
		EROSION CONTROL AND LANDSCAPING		
12.	410.0	Topsoil Type B		= _____
	CU. YD.		PER CU. YD.	
		TRAFFIC		
13.	13,073.0	Cement Concrete Curb and Gutter		= _____
	LIN. FT.		PER LIN. FT.	
14.	19.5	Lane Marker Type 1		= _____
	HUNDRED		PER HUNDRED	
15.	2.1	Lane Marker Type 2		= _____
	HUNDRED		PER HUNDRED	
16.		One-Way Piloted Traffic Control	5,000.00	= _____
			ESTIMATED	
17.	600.0	Labor for Traffic Control	12.00	= _____
	HOUR		PER HOUR	
		OTHER ITEMS		
18.	2,000.0	Reconstruct Wooden Fence		= _____
	LIN. FT.		PER LIN. FT.	
			TOTAL _____	= _____

NON-COLLUSION DECLARATION

I, by signing the proposal, hereby declare, under penalty of perjury under the laws of the United States that the following statements are true and correct:

1. That the undersigned person(s), firm, association or corporation has (have) not, either directly or indirectly, entered into any agreement, participated in any collusion, or otherwise taken any action in restraint of free competitive bidding in connection with the project for which this proposal is submitted.

2. That by signing the signature page of this proposal, I am deemed to have signed and have agreed to the provisions of this declaration.

NOTICE TO ALL BIDDERS

To report bid rigging activities call:

1-800-424-9071

The U.S. Department of Transportation (USDOT) operates the above toll-free "hotline" Monday through Friday, 8:00 a.m. to 5:00 p.m., eastern time. Anyone with knowledge of possible bid rigging, bidder collusion, or other fraudulent activities should use the "hotline" to report such activities.

The "hotline" is part of USDOT's continuing effort to identify and investigate highway construction contract fraud and abuse and is operated under the direction of the USDOT Inspector General. All information will be treated confidentially and caller anonymity will be respected.

DOT Form 272-036H
Revised 10/94

The bidder is hereby advised that by signature of this proposal he/she is deemed to have acknowledged all requirements and signed all certificates contained herein.

A proposal guaranty in an amount of five percent (5%) of the total bid, based upon the approximate estimate of quantities at the above prices and in the form as indicated below, is attached hereto:

CASH	☐	**IN THE AMOUNT OF** _____
CASHIER'S CHECK	☐	_____ DOLLARS
CERTIFIED CHECK	☐	**($_____) PAYABLE TO THE STATE TREASURER**
PROPOSAL BOND	☐	**IN THE AMOUNT OF 5% OF THE BID**

** Receipt is hereby acknowledged of **addendum(s) No.(s)** _____, _____ & _____.

SIGNATURE OF AUTHORIZED OFFICIAL(S)

_____

_____

PROPOSAL MUST BE SIGNED

FIRM NAME _____

(ADDRESS) _____

_____

te

(1) This proposal form is not transferable and any alteration of the firm's name entered hereon without prior permission from the Secretary of Transportation will be cause for considering the proposal irregular and subsequent rejection of the bid.

(2) Please refer to section 1-02.6 of the standard specifications, re: "Preparation of Proposal," or "Article 4" of the Instructions to Bidders for building construction jobs.

(3) Should it be necessary to modify this proposal either in writing or by electronic means, please make reference to the following proposal number in your communication _____

CONTRACT

THIS AGREEMENT, made and entered into this _____ day of _____ , 19 _____ , between the city /county of _____ under and by virtue of Title 35 RCW (cit and towns) or Title 36 RCW (counties), as amended and

hereinafter called the Contractor.

WITNESSETH:

That in consideration of the terms and conditions contained herein and attached and made a part of this agreement, the parties hereto covenant and agree as follows:

I. The Contractor shall do all work and furnish all tools, materials and equipment for

in accordance with and as described in the attached plans and specifications, and the standard specifications of the Washington State Department of Transportation which are by the reference incorporated herein and made part hereof and, shall perform any changes in the work in accord with the Contract Documents.

The Contractor shall provide and bear the expense of all equipment, work and labor, of any sort whatsoever that may be required for the transfer of materials and for constructing and completing the work provided for in these Contract Documents except those items mentioned therein to be furnished by the city/county of _____ .

II. The _____ hereby promises and agrees with the Contractor to employ,
city/county

and does employ the Contractor to provide the materials and to do and cause to be done the above described work and to complete and finish the same in accord with the attached plans and specifications and the terms and conditions herein contained and hereby contracts to pay for the same according to the attached specifications and the schedule of unit or itemized prices at the time and in the manner and upon the conditions provided for in this contract.

III. The contractor for himself/herself, and for his/her heirs, executors, administrators, successors, assigns, does hereby agree to the full performance of all the covenants herein contained upon the part of the Contractor.

IV. It is further provided that no liability shall attach to the _____ by reason of entering into this contract, except as provided herein.
City/County

IN WITNESS WHEREOF, the Contractor has executed this instrument, on the day and year first below written and the Local Agency Approving Authority has caused this instrument to be executed by and in the name of the said _____ the day and year first above written.
City/County

Executed by the Contractor _____ _____, 19 .

_____

_____

_____
Contractor

Executed by the Local Agency _____ _____, 19 .

_____

_____

(SEAL)

_____
Local Agency Approving Authority

_____
(Local Agency Attorney)

Sample City Letter of Financial Responsibility (for State Ad and Award Only)

Washington State Transportation Commission
Department of Transportation
Transportation Building
P.O. Box 47390
Olympia, Washington 98504-7308

Re:

(State Ad & Award)
Award of Project

Attn:
Assistant Secretary, TransAid

Gentlemen:

The Mayor of the city of _____ gives permission to award the above noted project after advertisement and bid opening, where the bid to be awarded is not more than 10 percent above the current engineer's estimate.

Should the award bid exceed the current municipal agreement dated _____ the city agrees to assume the responsibility for arranging project financing in excess of the agreement after the contract is awarded.

_____
Mayor

_____
Date

Sample County Letter of Financial Responsibility (for State Ad and Award Only)

Washington State Transportation Commission
Department of Transportation
Transportation Building
Olympia, Washington 98504

Re:

(State Ad & Award)
Award of Project

Attn:
Assistant Secretary, TransAid

Gentlemen:

The Board of County Commissioners of _____ County gives permission to award the above noted project after advertisement and bid opening, where the bid to be awarded is not more than 10 percent above the current engineer's estimate.

Should the award bid exceed the current municipal agreement dated _____ the county agrees to assume the responsibility for arranging project financing in excess of the agreement after the contract is awarded.

_____
Chairman

_____
Date

Preliminary Estimate Dated:	January 13, 1994
Title:	North Ridge Road
Highway:	Laramie County Road
Type of Work:	Grading, surfacing, paving with asphalt concrete, construct cement concrete driveways, erosion control, and pavement marking.
Project:	STPUL-6969(007)
County:	Laramie
Total Length:	Length of Project

Estimate Cost Data:

Contract Total	391,507.50
Engineering 15%	58,726.13
Total Cost of Project:	450,233.63

Note: Include below the line items such as: value of materials furnished by agency, agency force work, signs and traffic control, royalties, etc.

Page 1 of 4

Total Preliminary Estimate
Groups 1 and 2

Item No.	Description	Unit	Price	Unit Quantity	Amount
1	Mobilization	Lump Sum		Lump Sum	$ 20,000.00
2	Clearing and Grubbing	Lump Sum		Lump Sum	1,400.00
3	Roadway Excavation Including Haul	m^3	$ 2.00	780.0	1,560.00
4	Embankment Compaction	m^3	1.00	413.0	413.00
5	Adjust Manhole	Each	300.00	12.0	3,600.00
6	Adjust Catch Basin	Each	100.00	24.0	2,400.00
7	Gravel Base Class B	Tonne	3.00	28,870.0	86,610.00
8	Crushed Surfacing Top Course	Tonne	5.00	6,500.0	32,500.00
9	Asphalt for Tack Coat	Tonne	200.00	10.0	2,000.00
10	Cement Contract Driveway 14 Day	m^2	16.00	289.0	4,624.00
11	Asphalt Concrete Pavement				
	Class B Excluding Paving Asphalt	Tonne	15.00	10,283.0	154,245.00
12	Topsoil Type B	m^3	6.00	410.0	2,460.00
13	Cement Concrete Curb & Gutter	Lin. m	3.50	13,073.0	45,755.50
14	Lane Marker Type 1	Hundred	200.00	19.5	3,900.00
15	Lane Marker Type 2	Hundred	400.00	2.1	840.00
16	One-Way Piloted Traffic Control	Estimate			6,000.00
17	Labor for Traffic Control	Hour	12.00	600.0	7,200.00
18	Reconstruct Wooden Fence	Lin. m	8.00	2,000.0	16,000.00
	Contract Total				$ 391,507.50

Laramie County Road
North Ridge Road

Page 2 of 4

Group 1 Estimate

1/13/94

Project STPUL-6969(007) Group No. 1
Federal Participation

Description: Two 3.6 m lanes from Sta. 8+658.50 to Sta. 8+954.92
F.A. Funds 83.01% Urban. Sales Tax 0.00%

Title: Laramie County Road Length: 9 kilometers

Item No.	Description	Unit	Price	Unit Quantity	Amount
1	Mobilization	Lump Sum			$ 15,000.00
2	Clearing and Grubbing	Lump Sum			1,000.00
3	Roadway Excavation Including Haul	m^3	$ 2.00	590.0	1,180.00
4	Embankment Compaction	m^3	1.00	313.0	313.00
5	Adjust Manhole	Each	300.00	9.0	2,700.00
6	Adjust Catch Basin	Each	100.00	18.0	1,800.00
7	Gravel Base Class B	Tonne	3.00	21,660.0	64,980.00
8	Crushed Surfacing Top Course	Tonne	5.00	4,900.0	24,500.00
9	Asphalt for Tack Coat	Tonne	200.00	7.0	1,400.00
10	Cement Contract Driveway 14 Day	m^2	16.00	209.0	3,344.00
11	Asphalt Concrete Pavement				
	Class B Excluding Paving Asphalt	Tonne	15.00	7,773.0	116,595.00
12	Topsoil Type B	m^3	6.00	410.0	2,460.00
13	Cement Concrete Curb & Gutter	Lin. m	3.50	10,409.0	36,431.50
14	Lane Marker Type 1	Hundred	200.00	14.8	2,960.00
15	Lane Marker Type 2	Hundred	400.00	1.6	640.00
16	One-Way Piloted Traffic Control	Estimate			5,000.00
17	Labor for Traffic Control	Hour	12.00	500.0	6,000.00
18	Reconstruct Wooden Fence	Lin. m	8.00	2,000.0	16,000.00

Group Subtotal	$ 302,303.50
Engineering 15 Percent	45,345.53
Group 1 F.A. Total	$ 347,649.03

Laramie County Road
North Ridge Road

Page 3 of 4

Group 2 Estimate

1/13/94

Project STPUL-6969(007) Group No. 2
Local Funds Only

Description: Two 3.6 m lanes from Sta. 8+954.92 to Sta. 9+054.70
No. F.A. Funds and No Sales Tax

Title: Laramie County Road Length: 3 kilometers

Item No.	Description	Unit	Price	Unit Quantity	Amount
1	Mobilization	Lump Sum			$ 5,000.00
2	Clearing and Grubbing	Lump Sum			400.00
3	Roadway Excavation Including Haul	m^3	$ 2.00	190.0	380.00
4	Embankment Compaction	m^3	1.00	100.0	100.00
5	Adjust Manhole	Each	300.00	3.0	900.00
6	Adjust Catch Basin	Each	100.00	6.0	600.00
7	Gravel Base Class B	Tonne	3.00	7,210.0	21,630.00
8	Crushed Surfacing Top Course	Tonne	5.00	1,600.0	8,000.00
9	Asphalt for Tack Coat	Tonne	200.00	3.0	600.00
10	Cement Contract Driveway 14 Day	m^2	16.00	80.0	1,280.00
11	Asphalt Concrete Pavement				
	Class B Excluding Paving Asphalt	Tonne	15.00	2,510.0	37,650.00
13	Cement Concrete Curb & Gutter	Lin. m	3.50	2,664.0	9,324.00
14	Lane Marker Type 1	Hundred	200.00	4.7	940.00
15	Lane Marker Type 2	Hundred	400.00	0.5	200.00
16	One-Way Piloted Traffic Control	Estimate			1,000.00
17	Labor for Traffic Control	Hour	12.00	100.0	1,200.00

Group Subtotal	$ 89,204.00
Engineering 15 Percent	13,380.60
Group 2 Local Funds Only Total	$ 102,584.60

Laramie County Road
North Ridge Road

Page 4 of 4

Preliminary Estimate Dated:	January 13, 1994
Title:	North Ridge Road
Highway:	Laramie County Road
Type of Work:	Grading, surfacing, paving with asphalt concrete, construct cement concrete driveways, erosion control, and pavement marking.
Project:	STPUL-6969(007)
County:	Laramie
Total Length:	Length of Project

Estimate Cost Data:

Contract Total	391,507.50
Engineering 15%	58,726.13
Total Cost of Project:	450,233.63

Note: Include below the line items such as: value of materials furnished by agency, agency force work, signs and traffic control, royalties, etc.

Page 1 of 4

Total Preliminary Estimate
Groups 1 and 2

Item No.	Description	Unit	Price	Unit Quantity	Amount
1	Mobilization	Lump Sum		Lump Sum	$ 20,000.00
2	Clearing and Grubbing	Lump Sum		Lump Sum	1,400.00
3	Roadway Excavation Including Haul	Cu. Yd.	$ 2.00	780.0	1,560.00
4	Embankment Compaction	Cu. Yd.	1.00	413.0	413.00
5	Adjust Manhole	Each	300.00	12.0	3,600.00
6	Adjust Catch Basin	Each	100.00	24.0	2,400.00
7	Gravel Base Class B	Ton	3.00	28,870.0	86,610.00
8	Crushed Surfacing Top Course	Ton	5.00	6,500.0	32,500.00
9	Asphalt for Tack Coat	Ton	200.00	10.0	2,000.00
10	Cement Contract Driveway 14 Day	Sq. Yd.	16.00	289.0	4,624.00
11	Asphalt Concrete Pavement				
	Class B Excluding Paving Asphalt	Ton	15.00	10,283.0	154,245.00
12	Topsoil Type B	Cu. Yd.	6.00	410.0	2,460.00
13	Cement Concrete Curb & Gutter	Lin. Ft.	3.50	13,073.0	45,755.50
14	Lane Marker Type 1	Hundred	200.00	19.5	3,900.00
15	Lane Marker Type 2	Hundred	400.00	2.1	840.00
16	One-Way Piloted Traffic Control	Estimate			6,000.00
17	Labor for Traffic Control	Hour	12.00	600.0	7,200.00
18	Reconstruct Wooden Fence	Lin. Ft.	8.00	2,000.0	16,000.00
	Contract Total				$ 391,507.50

Laramie County Road
North Ridge Road

Page 2 of 4

Group 1 Estimate

1/13/94

Project STPUL-6969(007) Group No. 1
Federal Participation

Description: Two 12 ft. lanes from Sta. 8+658.50 to Sta. 8+954.92
F.A. Funds 83.01% Urban. Sales Tax 0.00%

Title: Laramie County Road Length: 5.614 miles

Item No.	Description	Unit	Price	Unit Quantity	Amount
1	Mobilization	Lump Sum			$ 15,000.00
2	Clearing and Grubbing	Lump Sum			1,000.00
3	Roadway Excavation Including Haul	Cu. Yd.	$ 2.00	590.0	1,180.00
4	Embankment Compaction	Cu. Yd.	1.00	313.0	313.00
5	Adjust Manhole	Each	300.00	9.0	2,700.00
6	Adjust Catch Basin	Each	100.00	18.0	1,800.00
7	Gravel Base Class B	Ton	3.00	21,660.0	64,980.00
8	Crushed Surfacing Top Course	Ton	5.00	4,900.0	24,500.00
9	Asphalt for Tack Coat	Ton	200.00	7.0	1,400.00
10	Cement Contract Driveway 14 Day	Sq. Yd.	16.00	209.0	3,344.00
11	Asphalt Concrete Pavement				
	Class B Excluding Paving Asphalt	Ton	15.00	7,773.0	116,595.00
12	Topsoil Type B	Cu Yd.	6.00	410.0	2,460.00
13	Cement Concrete Curb & Gutter	Lin. Ft.	3.50	10,409.0	36,431.50
14	Lane Marker Type 1	Hundred	200.00	14.8	2,960.00
15	Lane Marker Type 2	Hundred	400.00	1.6	640.00
16	One-Way Piloted Traffic Control	Estimate			5,000.00
17	Labor for Traffic Control	Hour	12.00	500.0	6,000.00
18	Reconstruct Wooden Fence	Lin. Ft.	8.00	2,000.0	16,000.00

Group Subtotal	$ 302,303.50
Engineering 15 Percent	45,345.53
Group 1 F.A. Total	$ 347,649.03

Laramie County Road
North Ridge Road

Page 3 of 4

Group 2 Estimate

1/13/94

Project STPUL-6969(007)

Group No. 2
Local Funds Only

Description: Two 12 ft. lanes from Sta. 8+954.92 to Sta. 9+054.70
No. F.A. Funds and No Sales Tax

Title: Laramie County Road Length: 1.900 miles

Item No.	Description	Unit	Price	Unit Quantity	Amount
1	Mobilization	Lump Sum			$ 5,000.00
2	Clearing and Grubbing	Lump Sum			400.00
3	Roadway Excavation Including Haul	Cu. Yd.	$ 2.00	190.0	380.00
4	Embankment Compaction	Cu. Yd.	1.00	100.0	100.00
5	Adjust Manhole	Each	300.00	3.0	900.00
6	Adjust Catch Basin	Each	100.00	6.0	600.00
7	Gravel Base Class B	Ton	3.00	7,210.0	21,630.00
8	Crushed Surfacing Top Course	Ton	5.00	1,600.0	8,000.00
9	Asphalt for Tack Coat	Ton	200.00	3.0	600.00
10	Cement Contract Driveway 14 Day	Sq. Yd.	16.00	80.0	1,280.00
11	Asphalt Concrete Pavement				
	Class B Excluding Paving Asphalt	Ton	15.00	2,510.0	37,650.00
13	Cement Concrete Curb & Gutter	Lin. Ft.	3.50	2,664.0	9,324.00
14	Lane Marker Type 1	Hundred	200.00	4.7	940.00
15	Lane Marker Type 2	Hundred	400.00	0.5	200.00
16	One-Way Piloted Traffic Control	Estimate			1,000.00
17	Labor for Traffic Control	Hour	12.00	100.0	1,200.00

Group Subtotal	$ 89,204.00
Engineering 15 Percent	13,380.60
Group 2 Local Funds Only Total	$ 102,584.60

Laramie County Road
North Ridge Road

Page 4 of 4

Logon to TSO and/or SPF

At ready mode or SPF 6 type:

EX 'HWY.MVS.CLSTLIB(CLST32A9)' Enter

You are now in the CLIST

Would you like to run 32A9? Y Enter

Should I charge this to your Logon Acct? Y Enter

Do you wish to use a different Effective Date? Usually N Enter

Enter code for rates to be listed S, F, or B Enter

Do you want a title block? Y or N

Please read these prompts. You cannot use an "&" sign. The CLIST will not accept it. Also, if last character is "-" or "+", you must put a / in column 38.

Enter your title block one line at a time. Proof it, correct it, and continue.

Enter county code numbers. After the last number is entered, you must hit enter again to let the CLIST know you are done entering numbers. It then lists the entered counties for you to proof. If correct, continue.

It then asks you for the occupation codes. Again, after the last number is entered, you hit enter. It lists account codes to proof. If correct, continue.

Enter a destination code, then the job class and it gives you a job number and downloading instruction for a PC if needed.

Topics for Interagency Coordination

Topic	Agency	Conditions Requiring	When to Initiate	References
Air Pollution	DOE	Air pollution from newly-constructed point source (asphalt plant, rock crusher, etc.)	Prior to commencing construction	RCW 70.94.152
Airport-Roadway Clearance	FAA	Airspace intrusion of roadway facility (proposed construction in the vicinity of public use/military airports may require FAA notice)	During design/prior to commencing construction	FHPM 6-1-1-2 FAA Req. p.77
Building Permit	County/City	Construction of any building — value of materials over $500	Prior to commencing construction	RCW 36.21.080
Coastal Zone Management	DOE	Applicants for federal permit/license are required to certify that the activity will comply with the state's Coastal Zone Management program (Shoreline Management Act)	When applying for permit	CZMA Sec. 307 16 USC 145 RCW 90-58
Conditional Use Permit	Counties/Cities DOE	Development within 61 km (200 feet) of water must be consistent with the local Shoreline Master Plan	No permit if consistent	RCW 36.70
Cultural, Archaeological, or Historic Sites (Sec. 106)	OAHP, FHWA ACHP	Suspected/actual, cultural/archaeological historic properties impacted by project	During preparation of environmental document	RCW 43.51.750 36 CFR 800 16 USC 470 Historic Preservation Act #106
Endangered/ Threatened Species	USFWS/NMFS	Plant or animal species that are suspected to be or actually are, of endangered or threatened status	During preparation of environmental document	16 USC 1531-1543
Fish & Wildlife	USFWS, WS Depts. of Fisheries and Game	Consultant required when any waters are proposed to be modified or controlled	During preparation of environmental document	FWCA #2 33 USC 66., 662
Floodplains	DOE/Counties	Any structure/activity which may adversely the flood regime of any stream within the affect flood zone	After/during preparation or environmental document	State-Flood Control Zone Act of 1935 Federal EO 11988 (Floodplain Management)
Forest Practices Approval	DNR (Area Offices)	Public/private land capable of supporting merchantable timber — some activities: road construction, pits, pesticide use, hydraulic permits, shoreline permits, reforestation, etc.	Environmental document phase/prior to commencing construction	WAC 222
Hydraulics Permit	WS Depts. of Fisheries and Game	Projects that will use, divert, obstruct, or change the natural flow or bed of any state waters (culvert work, realignment, bridge replacement, etc.)	During/after preparation of environmental document	RCW 75.20.100
Prime & Unique Farmland	Soil Conservation Services (USDOA)	Lands impacted are of prime or unique status	During preparation of environmental document	7CFR 650
Restricted Hydro-Electric Land	FERC	Utilize land from a FERC Licensed Project	During preparation of environmental document	18 CFR Part 2,.13
"Section 4(f)" Lands	FHWA, Affected Agency DOI, HUD, and USDOA	Use of park and recreation lands, wildlife and waterfowl refuges, and historic sites of national, state or local significance	During preparation of environmental document (Amended 5/19/78) FHPM 7-7-2(20) 23 CFR 138	49 USC 1651 (f) DOT Act of 1966 #4

Topic	Agency	Conditions Requiring	When to Initiate	References
Sewage Facilities	DOE/DSHS/ County	Construction modification of domestic/industrial wastewater facilities (sewer relocation, rest area construction, etc.) **DOE:** greater than 54 900 L/Day (14,500 gpd) surface water discharge, or a mechanical-treatment-process involvement. **DSHS:** 13 200 L/Day (3,500 gpd) to 54 900 L/Day (14,500 gpd) **County:** less than 13 200 L/Day (3,500 gpd)	Prior to commencing construction	RCW 90.48.110 WAC 173.240
Shoreline Management Substantial Development	Counties/Cities DOE	Shoreline development or construction valued at $1,000 or more, or materially interfering with normal public use of water	During preparation of environmental document	RCW 90.58
Short-Term Modification (Water Quality)	DOE	Short-term activities which may result in temporary reduction of water quality standard, and activities not subject to a waste discharge permit or water quality certification	During design	WAC 173-201-035 (8)(e) WAC 173-201-035 (5)(a) (WAC 173-102-100(2)
SM-2 Surface Mine Reclamation	DNR	Mining (pitsites, quarries), 0.8 ha (2 acres) or more/9 091 tonnes (10,000 tons) or more	During preparation of environmental document	WAC 22 — Forest Practices Act
Sole Source Aquifer	EPA	Any activity which may affect the aquifer recharge zone	During preparation of environmental document	SDWA P.L. 93-423
State Waste Disposal	DOE	Discharge of waste material from sand and gravel washing, pit dewatering, or cement/asphalt plant discharge into state waters.	During design WAC 173-220	RCW 90.48.160
Temporary Air Pollution	Local Air Pollution Control Authority/ DOE	Pollutants above allowed levels for temporary periods	Prior to commencing construction	RCW 70.94
Water Pollution Discharge (NPDES)	DOE	Discharge of pollutants into state surface waters	During design	WAC 173-220 FHPCA #402 33 USC 1344 RCW 90.48.260
Water Quality	DOE	Prior to issuance of a federal permit/license for activity which involves discharge into navigable waters, certification of compliance with state water quality standards is necessary	During project development	FHWA #401 RCW 90.48.260 WAC 173-225
Water Rights	DOE	Appropriation of ground water or surface water	Prior to putting water to use	RCW 90.44 RCW 90.03.250
Waters/ Wetlands (Sec. 404 - Dredge/Fill)	Army Corps of Engineers (Coordination with USFWS)	Discharging, dredging, or placing fill materials within waters of the USA or adjacent wetlands	Early stages of project development	Sec. 404 FWPCA 1972 33 USC 1344
Waterways (Sec. 10)	Army Corps of Engineers Coordination with USFWS)	Obstruction alteration, or improvement of any navigable water (rechanneling, piers, wharfs, dolphins, bulkheads, buoys, etc.)	Early stages of projects development	Rivers and Harbors Act of 1899 33 33 USC 401 #10
Waterways (Sec. 9)	Coast Guard (Coordination with USFWS)	Bridges and causeways in navigable waters, including all tidal-influenced streams	After design	Rivers and Harbors Act o of 1899 33 USC #9
Wetlands	USFWS or NMFS	Impact to lowlands covered with shallow and sometimes temporary/intermittent waters (swamps, marches, bogs, sloughs, potholes, etc.)	During preparation of environmental document	49 USC 1651 EO 11990 (Protection of Wetlands)

Topic	Agency	Conditions Requiring	When to Initiate	References
Wild & Scenic Rivers	USFS/NPS	Impacts to rivers or streams in or having potential for designation in the National Wild and Scenic River System	During preparation of environmental document	

LEGEND:

ACHP — Advisory Council on Historic Preservation
CFR — Code of Federal Regulations
CZMA — Coastal Zone Management Act
DNR — Department of Natural Resources (state)
DOE — Department of Ecology (state)
DOI — U.S. Department of Interior
DOT — U.S. Department of Transportation
EO — Executive Order
EPA — Environmental Protection Agency (federal)
FAA — Federal Aviation Administration (DOT)
FERC — Federal Energy Regulatory Commission
FHWA — Federal Highway Administration (dot)
FWCA — Fish And Wildlife Coordination Act
FWPCA — Federal Water Pollution Control Act
FHPM — Federal Highway Program Manual
NMFS — National Marine Fisheries Service (Department of Commerce)
NPDES — National Pollutant Discharge Elimination System
NPS — National Park Service (DOI)
OAHP — Office of Archaeology And Historic Preservation (state)
RCW — Revised Code of Washington
SDWA — Safe Drinking Water Act
USC — United States Code
USDOA — U.S. Department of Agriculture
USFS — U.S. Forest Service (usdoa)
WAC — Washington Administrative Code
WS — Washington State

REQUIRED CONTRACT PROVISIONS
FEDERAL-AID CONSTRUCTION CONTRACTS

		Page
I.	General	1
II.	Nondiscrimination	1
III.	Nonsegregated Facilities	3
IV.	Payment of Predetermined Minimum Wage	3
V.	Statements and Payrolls	6
VI.	Record of Materials, Supplies, and Labor	6
VII.	Subletting or Assigning the Contract	7
VIII.	Safety: Accident Prevention	7
IX.	False Statements Concerning Highway Projects	7
X.	Implementation of Clean Air Act and Federal Water Pollution Control Act	8
XI.	Certification Regarding Debarment, Suspension, Ineligibility, and Voluntary Exclusion	8
XII.	Certification Regarding Use of Contract Funds for Lobbying	9

ATTACHMENTS

A. Employment Preference for Appalachian Contracts (included in Appalachian contracts only)

I. GENERAL

1. These contract provisions shall apply to all work performed on the contract by the contractor's own organization and with the assistance of workers under the contractor's immediate superintendence and to all work performed on the contract by piecework, station work, or by subcontract.

2. Except as otherwise provided for in each section, the contractor shall insert in each subcontract all of the stipulations contained in these Required Contract Provisions, and further require their inclusion in any lower tier subcontract or purchase order that may in turn be made. The Required Contract Provisions shall not be incorporated by reference in any case. The prime contractor shall be responsible for compliance by any subcontractor or lower tier subcontractor with these Required Contract Provisions.

3. A breach of any of the stipulations contained in these Required Contract Provisions shall be sufficient grounds for termination of the contract.

4. A breach of the following clauses of the Required Contract Provisions may also be grounds for debarment as provided in 29 CFR 5.12:

Section I, paragraph 2;
Section IV, paragraphs 1, 2, 3, 4, and 7;
Section V, paragraphs 1 and 2a through 2g.

5. Disputes arising out of the labor standards provisions of Section IV (except paragraph 5) and Section V of these Required Contract Provisions shall not be subject to the general disputes clause of this contract. Such disputes shall be resolved in accordance with the procedures of the U.S. Department of Labor (DOL) as set forth in 29 CFR 5, 6, and 7. Disputes within the meaning of this clause include disputes between the contractor (or any of its subcontractors) and the contracting agency, the DOL, or the contractor's employees or their representatives.

6. **Selection of Labor**: During the performance of this contract, the contractor shall not:

a. discriminate against labor from any other State, possession, or territory of the United States (except for employment preference for Appalachian contracts, when applicable, as specified in Attachment A), or

b. employ convict labor for any purpose within the limits of the project unless it is labor performed by convicts who are on parole, supervised release, or probation.

II. NONDISCRIMINATION

(Applicable to all Federal-aid construction contracts and to all related subcontracts of $10,000 or more.)

1. **Equal Employment Opportunity**: Equal employment opportunity (EEO) requirements not to discriminate and to take affirmative action to assure equal opportunity as set forth under laws, executive orders, rules, regulations (28 CFR 35, 29 CFR 1630 and 41 CFR 60) and orders of the Secretary of Labor as modified by the provisions prescribed herein, and imposed pursuant to 23 U.S.C. 140 shall constitute the EEO and specific affirmative action standards for the contractor's project activities under this contract. The Equal Opportunity Construction Contract Specifications set forth under 41 CFR 60-4.3 and the provisions of the American Disabilities Act of 1990 (42 U.S.C. 12101 et seq.) set forth under 28 CFR 35 and 29 CFR 1630 are incorporated by reference in this contract. In the execution of this contract, the contractor agrees to comply with the following minimum specific requirement activities of EEO:

a. The contractor will work with the State highway agency (SHA) and the Federal Government in carrying out EEO obligations and in their review of his/her activities under the contract.

b. The contractor will accept as his operating policy the following statement:

"It is the policy of this Company to assure that applicants are employed, and that employees are treated during employment, without regard to their race, religion, sex, color, national origin, age or disability. Such action shall include: employment, upgrading, demotion, or transfer; recruitment or recruitment advertising; layoff or termination; rates of pay or other forms of compensation; and selection for training, including apprenticeship, preapprenticeship, and/or on-the-job training."

2. **EEO Officer**: The contractor will designate and make known to the SHA contracting officers an EEO Officer who will have the responsibility for and must be capable of effectively administering and promoting an active contractor program of EEO and who must be assigned adequate authority and responsibility to do so.

3. **Dissemination of Policy**: All members of the contractor's staff who are authorized to hire, supervise, promote, and discharge employees, or who recommend such action, or who are substantially involved in such action, will be made fully cognizant of, and will implement, the contractor's EEO policy and contractual responsibilities to provide EEO in each grade and classification of employment. To ensure that the above agreement will be

met, the following actions will be taken as a minimum:

a. Periodic meetings of supervisory and personnel office employees will be conducted before the start of work and then not less often than once every six months, at which time the contractor's EEO policy and its implementation will be reviewed and explained. The meetings will be conducted by the EEO Officer.

b. All new supervisory or personnel office employees will be given a thorough indoctrination by the EEO Officer, covering all major aspects of the contractor's EEO obligations within thirty days following their reporting for duty with the contractor.

c. All personnel who are engaged in direct recruitment for the project will be instructed by the EEO Officer in the contractor's procedures for locating and hiring minority group employees.

d. Notices and posters setting forth the contractor's EEO policy will be placed in areas readily accessible to employees, applicants for employment and potential employees.

e. The contractor's EEO policy and the procedures to implement such policy will be brought to the attention of employees by means of meetings, employee handbooks, or other appropriate means.

4. **Recruitment:** When advertising for employees, the contractor will include in all advertisements for employees the notation: "An Equal Opportunity Employer." All such advertisements will be placed in publications having a large circulation among minority groups in the area from which the project work force would normally be derived.

a. The contractor will, unless precluded by a valid bargaining agreement, conduct systematic and direct recruitment through public and private employee referral sources likely to yield qualified minority group applicants. To meet this requirement, the contractor will identify sources of potential minority group employees, and establish with such identified sources procedures whereby minority group applicants may be referred to the contractor for employment consideration.

b. In the event the contractor has a valid bargaining agreement providing for exclusive hiring hall referrals, he is expected to observe the provisions of that agreement to the extent that the system permits the contractor's compliance with EEO contract provisions. (The DOL has held that where implementation of such agreements have the effect of discriminating against minorities or women, or obligates the contractor to do the same, such implementation violates Executive Order 11246, as amended.)

c. The contractor will encourage his present employees to refer minority group applicants for employment. Information and procedures with regard to referring minority group applicants will be discussed with employees.

5. **Personnel Actions:** Wages, working conditions, and employee benefits shall be established and administered, and personnel actions of every type, including hiring, upgrading, promotion, transfer, demotion, layoff, and termination, shall be taken without regard to race, color, religion, sex, national origin, age or disability. The following procedures shall be followed:

a. The contractor will conduct periodic inspections of project sites to insure that working conditions and employee facilities do not indicate discriminatory treatment of project site personnel.

b. The contractor will periodically evaluate the spread of wages paid within each classification to determine any evidence of discriminatory wage practices.

c. The contractor will periodically review selected personnel actions in depth to determine whether there is evidence of discrimination. Where evidence is found, the contractor will promptly take corrective action. If the review indicates that the discrimination may extend beyond the actions reviewed, such corrective action shall include all affected persons.

d. The contractor will promptly investigate all complaints of alleged discrimination made to the contractor in connection with his obligations under this contract, will attempt to resolve such complaints, and will take appropriate corrective action within a reasonable time. If the investigation indicates that the discrimination may affect persons other than the complainant, such corrective action shall include such other persons. Upon completion of each investigation, the contractor will inform every complainant of all of his avenues of appeal.

6. **Training and Promotion:**

a. The contractor will assist in locating, qualifying, and increasing the skills of minority group and women employees, and applicants for employment.

b. Consistent with the contractor's work force requirements and as permissible under Federal and State regulations, the contractor shall make full use of training programs, i.e., apprenticeship, and on-the-job training programs for the geographical area of contract performance. Where feasible, 25 percent of apprentices or trainees in each occupation shall be in their first year of apprenticeship or training. In the event a special provision for training is provided under this contract, this subparagraph will be superseded as indicated in the special provision.

c. The contractor will advise employees and applicants for employment of available training programs and entrance requirements for each.

d. The contractor will periodically review the training and promotion potential of minority group and women employees and will encourage eligible employees to apply for such training and promotion.

7. **Unions:** If the contractor relies in whole or in part upon unions as a source of employees, the contractor will use his/her best efforts to obtain the cooperation of such unions to increase opportunities for minority groups and women within the unions, and to effect referrals by such unions of minority and female employees. Actions by the contractor either directly or through a contractor's association acting as agent will include the procedures set forth below:

a. The contractor will use best efforts to develop, in cooperation with the unions, joint training programs aimed toward qualifying more minority group members and women for membership in the unions and increasing the skills of minority group employees and women so that they may qualify for higher paying employment.

b. The contractor will use best efforts to incorporate an EEO clause into each union agreement to the end that such union will be contractually bound to refer applicants without regard to their race, color, religion, sex, national origin, age or disability.

c. The contractor is to obtain information as to the referral

practices and policies of the labor union except that to the extent such information is within the exclusive possession of the labor union and such labor union refuses to furnish such information to the contractor, the contractor shall so certify to the SHA and shall set forth what efforts have been made to obtain such information.

d. In the event the union is unable to provide the contractor with a reasonable flow of minority and women referrals within the time limit set forth in the collective bargaining agreement, the contractor will, through independent recruitment efforts, fill the employment vacancies without regard to race, color, religion, sex, national origin, age or disability; making full efforts to obtain qualified and/or qualifiable minority group persons and women. (The DOL has held that it shall be no excuse that the union with which the contractor has a collective bargaining agreement providing for exclusive referral failed to refer minority employees.) In the event the union referral practice prevents the contractor from meeting the obligations pursuant to Executive Order 11246, as amended, and these special provisions, such contractor shall immediately notify the SHA.

8. **Selection of Subcontractors, Procurement of Materials and Leasing of Equipment:** The contractor shall not discriminate on the grounds of race, color, religion, sex, national origin, age or disability in the selection and retention of subcontractors, including procurement of materials and leases of equipment.

a. The contractor shall notify all potential subcontractors and suppliers of his/her EEO obligations under this contract.

b. Disadvantaged business enterprises (DBE), as defined in 49 CFR 23, shall have equal opportunity to compete for and perform subcontracts which the contractor enters into pursuant to this contract. The contractor will use his best efforts to solicit bids from and to utilize DBE subcontractors or subcontractors with meaningful minority group and female representation among their employees. Contractors shall obtain lists of DBE construction firms from SHA personnel.

c. The contractor will use his best efforts to ensure subcontractor compliance with their EEO obligations.

9. **Records and Reports:** The contractor shall keep such records as necessary to document compliance with the EEO requirements. Such records shall be retained for a period of three years following completion of the contract work and shall be available at reasonable times and places for inspection by authorized representatives of the SHA and the FHWA.

a. The records kept by the contractor shall document the following:

(1) The number of minority and non-minority group members and women employed in each work classification on the project;

(2) The progress and efforts being made in cooperation with unions, when applicable, to increase employment opportunities for minorities and women;

(3) The progress and efforts being made in locating, hiring, training, qualifying, and upgrading minority and female employees; and

(4) The progress and efforts being made in securing the services of DBE subcontractors or subcontractors with meaningful minority and female representation among their employees.

b. The contractors will submit an annual report to the SHA each July for the duration of the project, indicating the number of minority, women, and non-minority group employees currently engaged in each work classification required by the contract work. This information is to be reported on Form FHWA-1391. If on-the job training is being required by special provision, the contractor will be required to collect and report training data.

III. NONSEGREGATED FACILITIES

(Applicable to all Federal-aid construction contracts and to all related subcontracts of $10,000 or more.)

a. By submission of this bid, the execution of this contract or subcontract, or the consummation of this material supply agreement or purchase order, as appropriate, the bidder, Federal-aid construction contractor, subcontractor, material supplier, or vendor, as appropriate, certifies that the firm does not maintain or provide for its employees any segregated facilities at any of its establishments, and that the firm does not permit its employees to perform their services at any location, under its control, where segregated facilities are maintained. The firm agrees that a breach of this certification is a violation of the EEO provisions of this contract. The firm further certifies that no employee will be denied access to adequate facilities on the basis of sex or disability.

b. As used in this certification, the term "segregated facilities" means any waiting rooms, work areas, restrooms and washrooms, restaurants and other eating areas, timeclocks, locker rooms, and other storage or dressing areas, parking lots, drinking fountains, recreation or entertainment areas, transportation, and housing facilities provided for employees which are segregated by explicit directive, or are, in fact, segregated on the basis of race, color, religion, national origin, age or disability, because of habit, local custom, or otherwise. The only exception will be for the disabled when the demands for accessibility override (e.g. disabled parking).

c. The contractor agrees that it has obtained or will obtain identical certification from proposed subcontractors or material suppliers prior to award of subcontracts or consummation of material supply agreements of $10,000 or more and that it will retain such certifications in its files.

IV. PAYMENT OF PREDETERMINED MINIMUM WAGE

(Applicable to all Federal-aid construction contracts exceeding $2,000 and to all related subcontracts, except for projects located on roadways classified as local roads or rural minor collectors, which are exempt.)

1. **General:**

a. All mechanics and laborers employed or working upon the site of the work will be paid unconditionally and not less often than once a week and without subsequent deduction or rebate on any account [except such payroll deductions as are permitted by regulations (29 CFR 3) issued by the Secretary of Labor under the Copeland Act (40 U.S.C. 276c)] the full amounts of wages and bona fide fringe benefits (or cash equivalents thereof) due at time of payment. The payment shall be computed at wage rates not less than those contained in the wage determination of the Secretary of Labor (hereinafter "the wage determination") which is attached hereto and made a part hereof, regardless of any contractual relationship which may be alleged to exist between the contractor or its subcontractors and such laborers and mechanics. The wage determination (including any

additional classifications and wage rates conformed under paragraph 2 of this Section IV and the DOL poster (WH-1321) or Form FHWA-1495) shall be posted at all times by the contractor and its subcontractors at the site of the work in a prominent and accessible place where it can be easily seen by the workers. For the purpose of this Section, contributions made or costs reasonably anticipated for bona fide fringe benefits under Section 1(b)(2) of the Davis-Bacon Act (40 U.S.C. 276a) on behalf of laborers or mechanics are considered wages paid to such laborers or mechanics, subject to the provisions of Section IV, paragraph 3b, hereof. Also, for the purpose of this Section, regular contributions made or costs incurred for more than a weekly period (but not less often than quarterly) under plans, funds, or programs, which cover the particular weekly period, are deemed to be constructively made or incurred during such weekly period. Such laborers and mechanics shall be paid the appropriate wage rate and fringe benefits on the wage determination for the classification of work actually performed, without regard to skill, except as provided in paragraphs 4 and 5 of this Section IV.

b. Laborers or mechanics performing work in more than one classification may be compensated at the rate specified for each classification for the time actually worked therein, provided, that the employer's payroll records accurately set forth the time spent in each classification in which work is performed.

c. All rulings and interpretations of the Davis-Bacon Act and related acts contained in 29 CFR 1, 3, and 5 are herein incorporated by reference in this contract.

2. **Classification:**

a. The SHA contracting officer shall require that any class of laborers or mechanics employed under the contract, which is not listed in the wage determination, shall be classified in conformance with the wage determination.

b. The contracting officer shall approve an additional classification, wage rate and fringe benefits only when the following criteria have been met:

(1) the work to be performed by the additional classification requested is not performed by a classification in the wage determination;

(2) the additional classification is utilized in the area by the construction industry;

(3) the proposed wage rate, including any bona fide fringe benefits, bears a reasonable relationship to the wage rates contained in the wage determination; and

(4) with respect to helpers, when such a classification prevails in the area in which the work is performed.

c. If the contractor or subcontractors, as appropriate, the laborers and mechanics (if known) to be employed in the additional classification or their representatives, and the contracting officer agree on the classification and wage rate (including the amount designated for fringe benefits where appropriate), a report of the action taken shall be sent by the contracting officer to the DOL, Administrator of the Wage and Hour Division, Employment Standards Administration, Washington, D.C. 20210. The Wage and Hour Administrator, or an authorized representative, will approve, modify, or disapprove every additional classification action within 30 days of receipt and so advise the contracting officer or will notify the contracting officer within the 30-day period that additional time is necessary.

d. In the event the contractor or subcontractors, as appropriate, the laborers or mechanics to be employed in the additional classification or their representatives, and the contracting officer do not agree on the proposed classification and wage rate (including the amount designated for fringe benefits, where appropriate), the contracting officer shall refer the questions, including the views of all interested parties and the recommendation of the contracting officer, to the Wage and Hour Administrator for determination. Said Administrator, or an authorized representative, will issue a determination within 30 days of receipt and so advise the contracting officer or will notify the contracting officer within the 30-day period that additional time is necessary

e. The wage rate (including fringe benefits where appropriate) determined pursuant to paragraph 2c or 2d of this Section IV shall be paid to all workers performing work in the additional classification from the first day on which work is performed in the classification.

3. **Payment of Fringe Benefits:**

a. Whenever the minimum wage rate prescribed in the contract for a class of laborers or mechanics includes a fringe benefit which is not expressed as an hourly rate, the contractor or subcontractors, as appropriate, shall either pay the benefit as stated in the wage determination or shall pay another bona fide fringe benefit or an hourly case equivalent thereof.

b. If the contractor or subcontractor, as appropriate, does not make payments to a trustee or other third person, he/she may consider as a part of the wages of any laborer or mechanic the amount of any costs reasonably anticipated in providing bona fide fringe benefits under a plan or program, provided, that the Secretary of Labor has found, upon the written request of the contractor, that the applicable standards of the Davis-Bacon Act have been met. The Secretary of Labor may require the contractor to set aside in a separate account assets for the meeting of obligations under the plan or program.

4. **Apprentices and Trainees (Programs of the U.S. DOL) and Helpers:**

a. Apprentices:

(1) Apprentices will be permitted to work at less than the predetermined rate for the work they performed when they are employed pursuant to and individually registered in a bona fide apprenticeship program registered with the DOL, Employment and Training Administration, Bureau of Apprenticeship and Training, or with a State apprenticeship agency recognized by the Bureau, or if a person is employed in his/her first 90 days of probationary employment as an apprentice in such an apprenticeship program, who is not individually registered in the program but who has been certified by the Bureau of Apprenticeship and Training or a State apprenticeship agency (where appropriate) to be eligible for probationary employment as an apprentice.

(2) The allowable ratio of apprentices to journeyman-level employees on the job site in any craft classification shall not be greater than the ratio permitted to the contractor as to the entire work force under the registered program. Any employee listed on a payroll at an apprentice wage rate, who is not registered or otherwise employed as stated above, shall be paid not less than the applicable wage rate listed in the wage determination for the classification of work actually performed. In addition any apprentice performing work on the job site in excess of the ratio permitted under the registered program shall be paid not less

than the applicable wage rate on the wage determination for the work actually performed. Where a contractor or subcontractor is performing construction on a project in a locality other than that in which its program is registered, the ratios and wage rates (expressed in percentages of the journeyman-level hourly rate) specified in the contractor's or subcontractor's registered program shall be observed.

(3) Every apprentice must be paid at not less than the rate specified in the registered program for the apprentice's level of progress, expressed as a percentage of the journeyman-level hourly rate specified in the applicable wage determination. Apprentices shall be paid fringe benefits in accordance with the provisions of the apprenticeship program. If the apprenticeship program does not specify fringe benefits, apprentices must be paid the full amount of fringe benefits listed on the wage determination for the applicable classification. If the Administrator for the Wage and Hour Division determines that a different practice prevails for the applicable apprentice classification, fringes shall be paid in accordance with that determination.

(4) In the event the Bureau of Apprenticeship and Training, or a State apprenticeship agency recognized by the Bureau, withdraws approval of an apprenticeship program, the contractor or subcontractor will no longer be permitted to utilize apprentices at less than the applicable predetermined rate for the comparable work performed by regular employees until an acceptable program is approved.

b. Trainees:

(1) Except as provided in 29 CFR 5.16, trainees will not be permitted to work at less than the predetermined rate for the work performed unless they are employed pursuant to and individually registered in a program which has received prior approval, evidenced by formal certification by the DOL, Employment and Training Administration.

(2) The ratio of trainees to journeyman-level employees on the job site shall not be greater than permitted under the plan approved by the Employment and Training Administration. Any employee listed on the payroll at a trainee rate who is not registered and participating in a training plan approved by the Employment and Training Administration shall be paid not less than the applicable wage rate on the wage determination for the classification of work actually performed. In addition, any trainee performing work on the job site in excess of the ratio permitted under the registered program shall be paid not less than the applicable wage rate on the wage determination for the work actually performed.

(3) Every trainee must be paid at not less than the rate specified in the approved program for his/her level of progress, expressed as a percentage of the journeyman-level hourly rate specified in the applicable wage determination. Trainees shall be paid fringe benefits in accordance with the provisions of the trainee program. If the trainee program does not mention fringe benefits, trainees shall be paid the full amount of fringe benefits listed on the wage determination unless the Administrator of the Wage and Hour Division determines that there is an apprenticeship program associated with the corresponding journeyman-level wage rate on the wage determination which provides for less than full fringe benefits for apprentices, in which case such trainees shall receive the same fringe benefits as apprentices.

(4) In the event the Employment and Training Administration withdraws approval of a training program, the contractor or subcontractor will no longer be permitted to utilize trainees at less than the applicable predetermined rate for the work performed until an acceptable program is approved.

c. Helpers:

Helpers will be permitted to work on a project if the helper classification is specified and defined on the applicable wage determination or is approved pursuant to the conformance procedure set forth in Section IV.2. Any worker listed on a payroll at a helper wage rate, who is not a helper under a approved definition, shall be paid not less than the applicable wage rate on the wage determination for the classification of work actually performed.

5. **Apprentices and Trainees (Programs of the U.S. DOT):**

Apprentices and trainees working under apprenticeship and skill training programs which have been certified by the Secretary of Transportation as promoting EEO in connection with Federal-aid highway construction programs are not subject to the requirements of paragraph 4 of this Section IV. The straight time hourly wage rates for apprentices and trainees under such programs will be established by the particular programs. The ratio of apprentices and trainees to journeymen shall not be greater than permitted by the terms of the particular program.

6. **Withholding:**

The SHA shall upon its own action or upon written request of an authorized representative of the DOL withhold, or cause to be withheld, from the contractor or subcontractor under this contract or any other Federal contract with the same prime contractor, or any other Federally-assisted contract subject to Davis-Bacon prevailing wage requirements which is held by the same prime contractor, as much of the accrued payments or advances as may be considered necessary to pay laborers and mechanics, including apprentices, trainees, and helpers, employed by the contractor or any subcontractor the full amount of wages required by the contract. In the event of failure to pay any laborer or mechanic, including any apprentice, trainee, or helper, employed or working on the site of the work, all or part of the wages required by the contract, the SHA contracting officer may, after written notice to the contractor, take such action as may be necessary to cause the suspension of any further payment, advance, or guarantee of funds until such violations have ceased.

7. **Overtime Requirements:**

No contractor or subcontractor contracting for any part of the contract work which may require or involve the employment of laborers, mechanics, watchmen, or guards (including apprentices, trainees, and helpers described in paragraphs 4 and 5 above) shall require or permit any laborer, mechanic, watchman, or guard in any workweek in which he/she is employed on such work, to work in excess of 40 hours in such workweek unless such laborer, mechanic, watchman, or guard receives compensation at a rate not less than one-and-one-half times his/her basic rate of pay for all hours worked in excess of 40 hours in such workweek.

8. **Violation:**

Liability for Unpaid Wages; Liquidated Damages: In the event of any violation of the clause set forth in paragraph 7 above, the contractor and any subcontractor responsible thereof shall be liable to the affected employee for his/her unpaid wages. In addition, such contractor and subcontractor shall be liable to

the United States (in the case of work done under contract for the District of Columbia or a territory, to such District or to such territory) for liquidated damages. Such liquidated damages shall be computed with respect to each individual laborer, mechanic, watchman, or guard employed in violation of the clause set forth in paragraph 7, in the sum of $10 for each calendar day on which such employee was required or permitted to work in excess of the standard work week of 40 hours without payment of the overtime wages required by the clause set forth in paragraph 7.

9. **Withholding for Unpaid Wages and Liquidated Damages:**

The SHA shall upon its own action or upon written request of any authorized representative of the DOL withhold, or cause to be withheld, from any monies payable on account of work performed by the contractor or subcontractor under any such contract or any other Federal contract with the same prime contractor, or any other Federally-assisted contract subject to the Contract Work Hours and Safety Standards Act, which is held by the same prime contractor, such sums as may be determined to be necessary to satisfy any liabilities of such contractor or subcontractor for unpaid wages and liquidated damages as provided in the clause set forth in paragraph 8 above.

V. STATEMENTS AND PAYROLLS

(Applicable to all Federal-aid construction contracts exceeding $2,000 and to all related subcontracts, except for projects located on roadways classified as local roads or rural collectors, which are exempt.)

1. **Compliance with Copeland Regulations (29 CFR 3):**

The contractor shall comply with the Copeland Regulations of the Secretary of Labor which are herein incorporated by reference.

2. **Payrolls and Payroll Records:**

a. Payrolls and basic records relating thereto shall be maintained by the contractor and each subcontractor during the course of the work and preserved for a period of 3 years from the date of completion of the contract for all laborers, mechanics, apprentices, trainees, watchmen, helpers, and guards working at the site of the work.

b. The payroll records shall contain the name, social security number, and address of each such employee; his or her correct classification; hourly rates of wages paid (including rates of contributions or costs anticipated for bona fide fringe benefits or cash equivalent thereof the types described in Section 1(b)(2)(B) of the Davis Bacon Act); daily and weekly number of hours worked; deductions made; and actual wages paid. In addition, for Appalachian contracts, the payroll records shall contain a notation indicating whether the employee does, or does not, normally reside in the labor area as defined in Attachment A, paragraph 1. Whenever the Secretary of Labor, pursuant to Section IV, paragraph 3b, has found that the wages of any laborer or mechanic include the amount of any costs reasonably anticipated in providing benefits under a plan or program described in Section 1(b)(2)(B) of the Davis Bacon Act, the contractor and each subcontractor shall maintain records which show that the commitment to provide such benefits is enforceable, that the plan or program is financially responsible, that the plan or program has been communicated in writing to the laborers or mechanics affected, and show the cost anticipated or the actual cost incurred in providing benefits. Contractors or subcontractors employing apprentices or trainees under approved programs shall maintain written evidence of the registration of apprentices and trainees, and ratios and wage rates prescribed in the applicable programs.

c. Each contractor and subcontractor shall furnish, each week in which any contract work is performed, to the SHA resident engineer a payroll of wages paid each of its employees (including apprentices, trainees, and helpers, described in Section IV, paragraphs 4 and 5, and watchmen and guards engaged on work during the preceding weekly payroll period). The payroll submitted shall set out accurately and completely all of the information required to be maintained under paragraph 2b of this Section V. This information may be submitted in any form desired. Optional Form WH-347 is available for this purpose and may be purchased from the Superintendent of Documents (Federal stock number 029-005-0014-1), U.S. Government Printing Office, Washington, D.C. 20402. The prime contractor is responsible for the submission of copies of payrolls by all subcontractors.

d. Each payroll submitted shall be accompanied by a "Statement of Compliance," signed by the contractor or subcontractor or his/her agent who pays or supervises the payment of the persons employed under the contract and shall certify the following:

(1) that the payroll for the payroll period contains the information required to be maintained under paragraph 2b of this Section V and that such information is correct and complete;

(2) that such laborer or mechanic (including each helper, apprentice, and trainee) employed on the contract during the payroll period has been paid the full weekly wages earned, without rebate, either directly or indirectly, and that no deductions have been made either directly or indirectly from the full wages earned, other than permissible deductions as set forth in the Regulations, 29 CFR 3;

(3) that each laborer or mechanic has been paid not less that the applicable wage rate and fringe benefits or cash equivalent for the classification of worked performed, as specified in the applicable wage determination incorporated into the contract.

e. The weekly submission of a properly executed certification set forth on the reverse side of Optional Form WH-347 shall satisfy the requirement for submission of the "Statement of Compliance" required by paragraph 2d of this Section V.

f. The falsification of any of the above certifications may subject the contractor to civil or criminal prosecution under 18 U.S.C. 1001 and 31 U.S.C. 231.

g. The contractor or subcontractor shall make the records required under paragraph 2b of this Section V available for inspection, copying, or transcription by authorized representatives of the SHA, the FHWA, or the DOL, and shall permit such representatives to interview employees during working hours on the job. If the contractor or subcontractor fails to submit the required records or to make them available, the SHA, the FHWA, the DOL, or all may, after written notice to the contractor, sponsor, applicant, or owner, take such actions as may be necessary to cause the suspension of any further payment, advance, or guarantee of funds. Furthermore, failure to submit the required records upon request or to make such records available may be grounds for debarment action pursuant to 29 CFR 5.12.

VI. RECORD OF MATERIALS, SUPPLIES, AND LABOR

1. On all Federal-aid contracts on the National Highway System, except those which provide solely for the installation of protective devices at railroad grade crossings, those which are constructed on a force account or direct labor basis, highway beautification contracts, and contracts for which the total final construction cost for roadway and bridge is less than $1,000,000 (23 CFR 635) the contractor shall:

a. Become familiar with the list of specific materials and supplies contained in Form FHWA-47, "Statement of Materials and Labor Used by Contractor of Highway Construction Involving Federal Funds," prior to the commencement of work under this contract.

b. Maintain a record of the total cost of all materials and supplies purchased for and incorporated in the work, and also of the quantities of those specific materials and supplies listed on Form FHWA-47, and in the units shown on Form FHWA-47.

c. Furnish, upon the completion of the contract, to the SHA resident engineer on Form FHWA-47 together with the data required in paragraph 1b relative to materials and supplies, a final labor summary of all contract work indicating the total hours worked and the total amount earned.

2. At the prime contractor's option, either a single report covering all contract work or separate reports for the contractor and for each subcontract shall be submitted.

VII. SUBLETTING OR ASSIGNING THE CONTRACT

1. The contractor shall perform with its own organization contract work amounting to not less than 30 percent (or a greater percentage if specified elsewhere in the contract) of the total original contract price, excluding any specialty items designated by the State. Specialty items may be performed by subcontract and the amount of any such specialty items performed may be deducted from the total original contract price before computing the amount of work required to be performed by the contractor's own organization (23 CFR 635).

a. "Its own organization" shall be construed to include only workers employed and paid directly by the prime contractor and equipment owned or rented by the prime contractor, with or without operators. Such term does not include employees or equipment of a subcontractor, assignee, or agent of the prime contractor.

b. "Specialty Items" shall be construed to be limited to work that requires highly specialized knowledge, abilities, or equipment not ordinarily available in the type of contracting organizations qualified and expected to bid on the contract as a whole and in general are to be limited to minor components of the overall contract.

2. The contract amount upon which the requirements set forth in paragraph 1 of Section VII is computed includes the cost of material and manufactured products which are to be purchased or produced by the contractor under the contract provisions.

3. The contractor shall furnish (a) a competent superintendent or supervisor who is employed by the firm, has full authority to direct performance of the work in accordance with the contract requirements, and is in charge of all construction operations (regardless of who performs the work) and (b) such other of its own organizational resources (supervision, management, and engineering services) as the SHA contracting officer determines is necessary to assure the performance of the contract.

4. No portion of the contract shall be sublet, assigned or otherwise disposed of except with the written consent of the SHA contracting officer, or authorized representative, and such consent when given shall not be construed to relieve the contractor of any responsibility for the fulfillment of the contract. Written consent will be given only after the SHA has assured that each subcontract is evidenced in writing and that it contains all pertinent provisions and requirements of the prime contract.

VIII. SAFETY: ACCIDENT PREVENTION

1. In the performance of this contract the contractor shall comply with all applicable Federal, State, and local laws governing safety, health, and sanitation (23 CFR 635). The contractor shall provide all safeguards, safety devices and protective equipment and take any other needed actions as it determines, or as the SHA contracting officer may determine, to be reasonably necessary to protect the life and health of employees on the job and the safety of the public and to protect property in connection with the performance of the work covered by the contract.

2. It is a condition of this contract, and shall be made a condition of each subcontract, which the contractor enters into pursuant to this contract, that the contractor and any subcontractor shall not permit any employee, in performance of the contract, to work in surroundings or under conditions which are unsanitary, hazardous or dangerous to his/her health or safety, as determined under construction safety and health standards (29 CFR 1926) promulgated by the Secretary of Labor, in accordance with Section 107 of the Contract Work Hours and Safety Standards Act (40 U.S.C. 333).

3. Pursuant to 29 CFR 1926.3, it is a condition of this contract that the Secretary of Labor or authorized representative thereof, shall have right of entry to any site of contract performance to inspect or investigate the matter of compliance with the construction safety and health standards and to carry out the duties of the Secretary under Section 107 of the Contract Work Hours and Safety Standards Act (40 U.S.C. 333).

IX. FALSE STATEMENTS CONCERNING HIGHWAY PROJECTS

In order to assure high quality and durable construction in conformity with approved plans and specifications and a high degree of reliability on statements and representations made by engineers, contractors, suppliers, and workers on Federal-aid highway projects, it is essential that all persons concerned with the project perform their functions as carefully, thoroughly, and honestly as possible. Willful falsification, distortion, or misrepresentation with respect to any facts related to the project is a violation of Federal law. To prevent any misunderstanding regarding the seriousness of these and similar acts, the following notice shall be posted on each Federal-aid highway project (23 CFR 635) in one or more places where it is readily available to all persons concerned with the project:

NOTICE TO ALL PERSONNEL ENGAGED ON FEDERAL-AID HIGHWAY PROJECTS

18 U.S.C. 1020 reads as follows:

"Whoever, being an officer, agent, or employee of the United States, or of any State or Territory, or whoever, whether a person, association, firm, or corporation, knowingly makes any false statement, false representation, or false report as to the character, quality, quantity, or cost of the material used or to be used, or the quantity or quality of the work performed or to be

performed, or the cost thereof in connection with the submission of plans, maps, specifications, contracts, or costs of construction on any highway or related project submitted for approval to the Secretary of Transportation; or

Whoever knowingly makes any false statement, false representation, false report or false claim with respect to the character, quality, quantity, or cost of any work performed or to be performed, or materials furnished or to be furnished, in connection with the construction of any highway or related project approved by the Secretary of Transportation; or

Whoever knowingly makes any false statement or false representation as to material fact in any statement, certificate, or report submitted pursuant to provisions of the Federal-aid Roads Act approved July 1, 1916, (39 Stat. 355), as amended and supplemented;

Shall be fined not more that $10,000 or imprisoned not more than 5 years or both."

X. IMPLEMENTATION OF CLEAN AIR ACT AND FEDERAL WATER POLLUTION CONTROL ACT

(Applicable to all Federal-aid construction contracts and to all related subcontracts of $100,000 or more.)

By submission of this bid or the execution of this contract, or subcontract, as appropriate, the bidder, Federal-aid construction contractor, or subcontractor, as appropriate, will be deemed to have stipulated as follows:

1. That any facility that is or will be utilized in the performance of this contract, unless such contract is exempt under the Clean Air Act, as amended (42 U.S.C. 1857 et seq., as amended by Pub.L. 91-604), and under the Federal Water Pollution Control Act, as amended (33 U.S.C. 1251 et seq., as amended by Pub.L. 92-500), Executive Order 11738, and regulations in implementation thereof (40 CFR 15) is not listed, on the date of contract award, on the U.S. Environmental Protection Agency (EPA) List of Violating Facilities pursuant to 40 CFR 15.20.

2. That the firm agrees to comply and remain in compliance with all the requirements of Section 114 of the Clean Air Act and Section 308 of the Federal Water Pollution Control Act and all regulations and guidelines listed thereunder.

3. That the firm shall promptly notify the SHA of the receipt of any communication from the Director, Office of Federal Activities, EPA, indicating that a facility that is or will be utilized for the contract is under consideration to be listed on the EPA List of Violating Facilities.

4. That the firm agrees to include or cause to be included the requirements of paragraph 1 through 4 of this Section X in every nonexempt subcontract, and further agrees to take such action as the government may direct as a means of enforcing such requirements.

XI. CERTIFICATION REGARDING DEBARMENT, SUSPENSION, INELIGIBILITY AND VOLUNTARY EXCLUSION

1. **Instructions for Certification - Primary Covered Transactions:**

(Applicable to all Federal-aid contracts - 49 CFR 29)

a. By signing and submitting this proposal, the prospective primary participant is providing the certification set out below.

b. The inability of a person to provide the certification set out below will not necessarily result in denial of participation in this covered transaction. The prospective participant shall submit an explanation of why it cannot provide the certification set out below. The certification or explanation will be considered in connection with the department or agency's determination whether to enter into this transaction. However, failure of the prospective primary participant to furnish a certification or an explanation shall disqualify such a person from participation in this transaction.

c. The certification in this clause is a material representation of fact upon which reliance was placed when the department or agency determined to enter into this transaction. If it is later determined that the prospective primary participant knowingly rendered an erroneous certification, in addition to other remedies available to the Federal Government, the department or agency may terminate this transaction for cause of default.

d. The prospective primary participant shall provide immediate written notice to the department or agency to whom this proposal is submitted if any time the prospective primary participant learns that its certification was erroneous when submitted or has become erroneous by reason of changed circumstances.

e. The terms "covered transaction," "debarred," "suspended," "ineligible," "lower tier covered transaction," "participant," "person," "primary covered transaction," "principal," "proposal," and "voluntarily excluded," as used in this clause, have the meanings set out in the Definitions and Coverage sections of rules implementing Executive Order 12549. You may contact the department or agency to which this proposal is submitted for assistance in obtaining a copy of those regulations.

f. The prospective primary participant agrees by submitting this proposal that, should the proposed covered transaction be entered into, it shall not knowingly enter into any lower tier covered transaction with a person who is debarred, suspended, declared ineligible, or voluntarily excluded from participation in this covered transaction, unless authorized by the department or agency entering into this transaction.

g. The prospective primary participant further agrees by submitting this proposal that it will include the clause titled "Certification Regarding Debarment, Suspension, Ineligibility and Voluntary Exclusion-Lower Tier Covered Transaction," provided by the department or agency entering into this covered transaction, without modification, in all lower tier covered transactions and in all solicitations for lower tier covered transactions.

h. A participant in a covered transaction may rely upon a certification of a prospective participant in a lower tier covered transaction that is not debarred, suspended, ineligible, or voluntarily excluded from the covered transaction, unless it knows that the certification is erroneous. A participant may decide the method and frequency by which it determines the eligibility of its principals. Each participant may, but is not required to, check the nonprocurement portion of the "Lists of Parties Excluded From Federal Procurement or Nonprocurement Programs" (Nonprocurement List) which is compiled by the General Services Administration.

i. Nothing contained in the foregoing shall be construed to require establishment of a system of records in order to render in good faith the certification required by this clause. The knowl

edge and information of participant is not required to exceed that which is normally possessed by a prudent person in the ordinary course of business dealings.

j. Except for transactions authorized under paragraph f of these instructions, if a participant in a covered transaction knowingly enters into a lower tier covered transaction with a person who is suspended, debarred, ineligible, or voluntarily excluded from participation in this transaction, in addition to other remedies available to the Federal Government, the department or agency may terminate this transaction for cause or default.

* * * * *

Certification Regarding Debarment, Suspension, Ineligibility and Voluntary Exclusion--Primary Covered Transactions

1. The prospective primary participant certifies to the best of its knowledge and belief, that it and its principals:

a. Are not presently debarred, suspended, proposed for debarment, declared ineligible, or voluntarily excluded from covered transactions by any Federal department or agency;

b. Have not within a 3-year period preceding this proposal been convicted of or had a civil judgement rendered against them for commission of fraud or a criminal offense in connection with obtaining, attempting to obtain, or performing a public (Federal, State or local) transaction or contract under a public transaction; violation of Federal or State antitrust statutes or commission of embezzlement, theft, forgery, bribery, falsification or destruction of records, making false statements, or receiving stolen property;

c. Are not presently indicted for or otherwise criminally or civilly charged by a governmental entity (Federal, State or local) with commission of any of the offenses enumerated in paragraph 1b of this certification; and

d. Have not within a 3-year period preceding this application/proposal had one or more public transactions (Federal, State or local) terminated for cause or default.

2. Where the prospective primary participant is unable to certify to any of the statements in this certification, such prospective participant shall attach an explanation to this proposal.

* * * * *

2. **Instructions for Certification - Lower Tier Covered Transactions:**

(Applicable to all subcontracts, purchase orders and other lower tier transactions of $25,000 or more - 49 CFR 29)

a. By signing and submitting this proposal, the prospective lower tier is providing the certification set out below.

b. The certification in this clause is a material representation of fact upon which reliance was placed when this transaction was entered into. If it is later determined that the prospective lower tier participant knowingly rendered an erroneous certification, in addition to other remedies available to the Federal Government, the department, or agency with which this transaction originated may pursue available remedies, including suspension and/or debarment.

c. The prospective lower tier participant shall provide immediate written notice to the person to which this proposal is submitted if at any time the prospective lower tier participant learns that its certification was erroneous by reason of changed circumstances.

d. The terms "covered transaction," "debarred," "suspended," "ineligible," "primary covered transaction," "participant," "person," "principal," "proposal," and "voluntarily excluded," as used in this clause, have the meanings set out in the Definitions and Coverage sections of rules implementing Executive Order 12549. You may contact the person to which this proposal is submitted for assistance in obtaining a copy of those regulations.

e. The prospective lower tier participant agrees by submitting this proposal that, should the proposed covered transaction be entered into, it shall not knowingly enter into any lower tier covered transaction with a person who is debarred, suspended, declared ineligible, or voluntarily excluded from participation in this covered transaction, unless authorized by the department or agency with which this transaction originated.

f. The prospective lower tier participant further agrees by submitting this proposal that it will include this clause titled "Certification Regarding Debarment, Suspension, Ineligibility and Voluntary Exclusion-Lower Tier Covered Transaction," without modification, in all lower tier covered transactions and in all solicitations for lower tier covered transactions.

g. A participant in a covered transaction may rely upon a certification of a prospective participant in a lower tier covered transaction that is not debarred, suspended, ineligible, or voluntarily excluded from the covered transaction, unless it knows that the certification is erroneous. A participant may decide the method and frequency by which it determines the eligibility of its principals. Each participant may, but is not required to, check the Nonprocurement List.

h. Nothing contained in the foregoing shall be construed to require establishment of a system of records in order to render in good faith the certification required by this clause. The knowledge and information of participant is not required to exceed that which is normally possessed by a prudent person in the ordinary course of business dealings.

i. Except for transactions authorized under paragraph e of these instructions, if a participant in a covered transaction knowingly enters into a lower tier covered transaction with a person who is suspended, debarred, ineligible, or voluntarily excluded from participation in this transaction, in addition to other remedies available to the Federal Government, the department or agency with which this transaction originated may pursue available remedies, including suspension and/or debarment.

* * * * *

Certification Regarding Debarment, Suspension, Ineligibility and Voluntary Exclusion--Lower Tier Covered Transactions:

1. The prospective lower tier participant certifies, by submission of this proposal, that neither it nor its principals is presently debarred, suspended, proposed for debarment, declared ineligible, or voluntarily excluded from participation in this transaction by any Federal department or agency.

2. Where the prospective lower tier participant is unable to certify to any of the statements in this certification, such prospective participant shall attach an explanation to this proposal.

* * * * *

XII. CERTIFICATION REGARDING USE OF CONTRACT FUNDS FOR LOBBYING

(Applicable to all Federal-aid construction contracts and to all related subcontracts which exceed $100,000 - 49 CFR 20)

1. The prospective participant certifies, by signing and submitting this bid or proposal, to the best of his or her knowledge and belief, that:

a. No Federal appropriated funds have been paid or will be paid, by or on behalf of the undersigned, to any person for influencing or attempting to influence an officer or employee of any Federal agency, a Member of Congress, an officer or employee of Congress, or an employee of a Member of Congress in connection with the awarding of any Federal contract, the making of any Federal grant, the making of any Federal loan, the entering into of any cooperative agreement, and the extension, continuation, renewal, amendment, or modification of any Federal contract, grant, loan, or cooperative agreement.

b. If any funds other than Federal appropriated funds have been paid or will be paid to any person for influencing or attempting to influence an officer or employee of any Federal agency, a Member of Congress, an officer or employee of Congress, or an employee of a Member of Congress in connection with this Federal contract, grant, loan, or cooperative agreement, the undersigned shall complete and submit Standard Form-LLL, "Disclosure Form to Report Lobbying," in accordance with its instructions.

2. This certification is a material representation of fact upon which reliance was placed when this transaction was made or entered into. Submission of this certification is a prerequisite for making or entering into this transaction imposed by 31 U.S.C. 1352. Any person who fails to file the required certification shall be subject to a civil penalty of not less than $10,000 and not more than $100,000 for each such failure.

3. The prospective participant also agrees by submitting his or her bid or proposal that he or she shall require that the language of this certification be included in all lower tier subcontracts, which exceed $100,000 and that all such recipients shall certify and disclose accordingly.

ATTACHMENT A - EMPLOYMENT PREFERENCE FOR APPALACHIAN CONTRACTS

(Applicable to Appalachian contracts only.)

1. During the performance of this contract, the contractor undertaking to do work which is, or reasonably may be, done as on-site work, shall give preference to qualified persons who regularly reside in the labor area as designated by the DOL wherein the contract work is situated, or the subregion, or the Appalachian counties of the State wherein the contract work is situated, except:

a. To the extent that qualified persons regularly residing in the area are not available.

b. For the reasonable needs of the contractor to employ supervisory or specially experienced personnel necessary to assure an efficient execution of the contract work.

c. For the obligation of the contractor to offer employment to present or former employees as the result of a lawful collective bargaining contract, provided that the number of nonresident persons employed under this subparagraph 1c shall not exceed 20 percent of the total number of employees employed by the contractor on the contract work, except as provided in subparagraph 4 below.

2. The contractor shall place a job order with the State Employment Service indicating (a) the classifications of the laborers, mechanics and other employees required to perform the contract work, (b) the number of employees required in each classification,
(c) the date on which he estimates such employees will be required, and (d) any other pertinent information required by the State Employment Service to complete the job order form. The job order may be placed with the State Employment Service in writing or by telephone. If during the course of the contract work, the information submitted by the contractor in the original job order is substantially modified, he shall promptly notify the State Employment Service.

3. The contractor shall give full consideration to all qualified job applicants referred to him by the State Employment Service. The contractor is not required to grant employment to any job applicants who, in his opinion, are not qualified to perform the classification of work required.

4. If, within 1 week following the placing of a job order by the contractor with the State Employment Service, the State Employment Service is unable to refer any qualified job applicants to the contractor, or less than the number requested, the State Employment Service will forward a certificate to the contractor indicating the unavailability of applicants. Such certificate shall be made a part of the contractor's permanent project records. Upon receipt of this certificate, the contractor may employ persons who do not normally reside in the labor area to fill positions covered by the certificate, notwithstanding the provisions of subparagraph 1c above.

5. The contractor shall include the provisions of Sections 1 through 4 of this Attachment A in every subcontract for work which is, or reasonably may be, done as on-site work.

AMENDMENT
REQUIRED CONTRACT PROVISIONS
FEDERAL-AID CONSTRUCTION CONTRACTS
(Exclusive of Appalachian Contracts)

Under Section IV, Paragraph 2b(4) is deleted.

Under Section IV, Paragraph 4, "and helpers" is deleted from the title.

Under Section IV, Paragraph 4a(1), add:

> The provisions in this section allowing apprentices to work at less than the predetermined rate when they are registered in a bona fide apprenticeship program registered with the U.S. Department of Labor, Employment and Training Administration, or with the Bureau of Apprenticeship and Training, does not preclude a requirement for the Contractor to pay apprentices the full applicable predetermined rate in the event a State Apprenticeship Agency, recognized by the Bureau, has not approved, or withdraws approval, of an apprenticeship program.

Under Section IV, Paragraph 4c is deleted.

Under Section IV, Paragraph 6 is revised by deleting "helpers" and "helper".

Under Section IV, Paragraph 7 is revised by deleting "helpers".

Under Section V, Paragraph 2a is revised by deleting "helpers".

Under Section V, Paragraph 2d(2) is revised by deleting "helper".

Amendment to Form FHWA 1273
Revised June 27, 1994

Washington State
Department of Transportation

Local Agency
Plans Preparation Checklist

Rd./St. No./Name	Project No.	P.I.N.	P.E. / Design Eng.	F.A. No (s) or Local Agency
Job Title				Program
Prepared By	Phone No.	District Reviewer		Phone No.

✓ Items Required On This Project — IN Initial When Complete

Permits & Approvals	N/A	✓	IN
Army Corp Of Eng. (Sec. 10 Or Sec. 404)			
FAA Airport/Highway Clearence			
FERC Restricted Hydro-Electric Land			
USFWS Wellands Report			
USFWS/NMFS Endangered/Threatened Species		✓	
Soil Conservation Service Prime & Unique Farmlands			
Nat'l Forest Restriction			
Park Restriction (4(f))			
OAHP Historic/Archaeological (Sec. 106)		✓	
EPA Sole Source Aquifer			
Dept's Of Fish. And Wildlife HPA			
DOE Water Quality Cert.			
DOE/Counties Flood Plains			
DOE Coastal Zone Management Act			
DOE Discharge Of Pollutants Into Surface Water (NPDES)			
DOE State Waste Disposal			
DOE Short Term Mod.			
DOE Water Right Approp.			
DOE Water Pollution Control Plan			
Counties/Cities DOE Shoreline Management Substantial Development			
Counties/Cities DOE Conditional Use			
EIS Commitments			
NEPA (All Federal Aid Projects)			
SEPA		✓	

Railroads	N/A	✓	IN
Railway Easement (Checked for Stipulations)			
Railway Construction Agreement			
Railroad Insurance			
Flagging Cost Estimate			

Cities	N/A	✓	IN
Approval Of City Streets As Detours (Agreement)			
City Participation In Cost (Agreement)			
City Streets Used As Haul Roads (Agreement)			
Construction Permits			
Turnback Agreement			

County	N/A	✓	IN
Approval Of County Roads As Detours (Agreement)			
County Participation In Cost (Agreement)			
County Roads Used As Haul Roads (Agreement)			
Construction Permits			
Turnback Agreement			

Compare Previous Approvals	N/A	✓	IN
Detours			
Approved Recl. Plan For Pit Site			
Approval For Tied Bids			
Approval Not To Use Bridge Approach Slab			

Hydraulics	N/A	✓	IN
Pipe Alternates			

Materials	N/A	✓	IN
Sufficient Quantity in Pit Site			
Spec. Conditions – Wet Soil, Unsuitable, Etc.			
Spec. Treat. For Exist. Pave.			
Ret. Wall Data Sheet For Rock Walls Over 5' And All Other Walls Over 10'			
pH And Soil Resistivity Values For Pipe Alternates			

Plans – General	N/A	✓	IN
Township, Range, Subdivision, North Arrow, Scale Bar Each Sheet		✓	
State Boundary, County Line, Corporate Limit			
Reservation, Park Or Forest Boundary			
Project Limits Noted		✓	
Construction Limits Noted			
Federal Aid Sections Noted			
Ultimate Const. Detailed (FA Jobs)			
Note "Bridges Included" Or "Bridges Not Included"			
Equations Noted			
Contract Recl. Plan Included			
Index To Plans (More Than 30 Sheets)			
Sheets Numbered (In Pencil Or Use Ref. No. For Large Projects)		✓	
Project Title Block Left Blank		✓	
Sheets Identified In Lower Left Corner		✓	
Sheet Titles In Ink In Lower Right Title Block		✓	
Local Agencies & St. Aid Seals & Signatures			
Consultant Signatures & Seals			
Consultant Written Consent To Revise Plan			
All Plan Sheets In Proper Order		✓	
Connect. To Existing Streets, Driveways, Etc. (Field Rev.)			
No Combination Of Ink And Pencil on Same Sheet		✓	
Plan Symbols In Accord. Chapter 5 – Legend		✓	
Min. Lettering Height 1/8" On Full Size Sheet		✓	

Vicinity Map	N/A	✓	IN
Reasonable Scale To Show The Project		✓	
Project Limits By Milepost And Stationing		✓	
Construction Limits By Milepost And Stationing			
Equations And Exceptions			
Distances To Towns – Rural Projects Only			
Pit, Waste, and Stockpile Sites And Haul Roads			
Detour Routes			
Railroad Lines – IMPORTANT To Show Any In Area			
If Staged Project, Show Staging For Future FA Funding			
Show Bridge No.			

Summary of Quantities	N/A	✓	IN
All Necessary Groups Per Chapter 3		✓	
Seperate Groups For Agreement Work			
Review For Order, Nomenclature And Standard Number		✓	
Look For Unusual And Non-Standard Items – These Need Sp. Provs.		✓	
Use Std. Item No. For Std. Items		✓	
All Items Tabulated		✓	
Check Quantities From Plans		✓	
Q.A. Items			

Roadway Sections	N/A	✓	IN
Mainline			
Ramps			
Frontage Roads			
City/County Roads At Intersections			
Road Approaches			
Detours			
Trails			
Bridge Approach Slab			
Bridge			
Label Sections			
Sta Limits For Each Sec – Entire Length Of Each Rdwy Must Be Covered			
Check For Overlap And Gaps In Stationing			
Show Future Overlay On F.A. Projects For Future FA Funding			
Conformance With Soils Report			
Conformance With Design Report			
Guardrail Widening Detail			
Shoulder Dressing Detail			
Slope Rounding Detail			
Broken Back Subgrade Shoulder Detail			
ACP Planing Detail			
Table For Variable Slopes			
Legend All Sheets			
Reference Notes			
Note Equations And Exceptions			
Lift Thickness For ACP And Surfacing (Compacted Depth)			
No "Min." Or "Max." For Surf. And Paving Depths Or Slopes			

Alignment, R/W, Grading & Existing Features Plan	N/A	✓	IN
Curve Data, Super Elevation Rates			
Show Cut And Fill Catch Line			
Monumentation – Protect Existing, Install New			
Legend Or Reference Note On All Sheets			
Alignment Plan Must Show R/W Centerline (Including R/W Curve Data) And Const. Centerline With Ties If Different			
R/W And L/A Must Agree With Approved R/W & L/A Plan			
Show RR Alignment And RR R/W			
Are Easements And/Or Permits Required			
Show Turnback Lines			
Complete Topog Incl. Utilities (Field Review)			
Show Site Prep. And Demolition Work			
All Items To Be Removed Shown			
Show Fencing			
Show Guardrail (Or Paving Plan)			

Quantity Tabulations	N/A	✓	IN
Same Order And Nomenclature As On Summary Of Quantities			
Items Required On Q-Tab Per Chapter 3			
Round Off Quantities Per Chapter 3			
Correct Totals (Sheet And Project)			
Transfer Project Totals To Summary Of Quantities			
Guide Post Color And Reflector Type Indicated			

Quantity Tabulations (Cont.)	N/A	✓	IN
1-2 Raised Pave. Mark. Color Indicated			
Traffic Arrow Type Indicated			
Agreement Items Denoted			
Plan Sheet Reference Number Filled In			
Stations Agree With Plans			
Guardrail Placement Case			
Radius And G.R. Length For Non-Std. Bends			
Design "F" Guardrail Terminal Approval By Bridge			
Leave Every 5th Item Column And Station Line Blank			
Appropriate Special Provision Referred To In GENERAL NOTES			

Profiles	N/A	✓	IN
Mainline			
Ramps			
Frontage Roads			
Detours			
Trails			
Show Equations And Exceptions			
Plan/Profile Sheets, Stationing Must Be Identical			
Coordinate With Roadway Sections And Plans			
Show Bridges ("Included" or "Not Included")			
Show Quantities Per Chapter 3 (10 Sta. Totals)			
Round Off Quantities Per Chapter 3			
Correct Totals To Summary Of Quantities			
Show Unsuit. Exc. Limits And Excavation Slopes			
Superelevation Diagrams, Match Rates As Shown On Alignment Plan			
Datum Symbol And Bench Mark Locations			
Show Road Approach Arrow & Indicate Lt. & Rt.			

Structure Notes	N/A	✓	IN
Order And Nomenclature Of Item As Shown On Summ. Of Quant.			
Round Off Quantities Per Chapter 3			
Correct Totals (Sheet & Project)			
Transfer Project Totals To Summ. Of Quant.			
Consistency Between Structure Notes, Plans, Profiles, And Spec's.			
Agreement Items Noted			
Steel., Alum., And Conc. Pipe Alter. Provided			
Alternate Treat. For Steel And Alum. Pipe			
Maximum Height Of Cover Column On Structure Notes In Pencil, Or Separate Level In CAD Files			
Note Beveled End Sections			
Leave Every 5th Item Column Blank			
Appropriate Special Provision Referred To In GENERAL NOTES			
Leave Several Station Lines Blank Between Ref. Sheet Nos.			
Box Culvert Quantities			

Drainage Plans And Profiles	N/A	✓	IN
Legend Or Reference Note On All Sheets			
Need Profiles For Major Culverts And Sewer Systems			
Conformance With Hydraulics Report			
Pipes Over 30" Dia. Need Design Review By Hydraulics			
Details Required For Work Not Covered By Standard Plans			
Show Distance Between Structures (i.e. ℄ C.B. to ℄ C.B.)			

Utility Relocations	N/A	✓	IN
Existing Utilities Must Be Shown In Plans			
Reloc. Costs – Reflect In Below-The-Line Costs			
Timing Of Work – Address In Provisions			
Details			

Channelization And Paving Plan	N/A	✓	IN
Paving Plan And Road. Sect. Must Agree			
Legend Or Reference Note On All Sheets			
Show Paving Plan For I/C And Intersections			
Channelization Details			
Show Guide Posts Especially I/C And Intersections			
Show Pave. Marking (Optional)			

Miscellaneous Details	N/A	✓	IN
Required For Work Not Covered By Standard Plans			

Illumination Plans, Schedules And Details	N/A	✓	IN
Legend Or Reference Note On All Sheets			
Conflicts With Existing Features, i.e., Utilities, Drainage, & Sidewalks			
All Work Within R/W Or Construction Permit Areas			

Signal Plans, Schedules And Details	N/A	✓	IN
Legend Or Reference Note On All Sheets			
Conflicts With Existing Features			
Traffic Signal Approval/Permit No.			
All Work Within R/W Or Construction Permit Areas			

Signing Plans and Sign Specifications	N/A	✓	IN
Legend Or Reference Note On All Sheets			
Separate Set Of Plan Sheets For Construction Signing			
Separate Plan Sheet Specifications For Sign Removal/Relocation			

Landscape	N/A	✓	IN
Contour Grading Plan			
Planting Detail			
Approval From Dist. Landscape			
Approval From HQ Landscape			
Wildflower Policy (Federal Aid Projects)			

Rest Areas	N/A	✓	IN

Viewpoints	N/A	✓	IN

Minor Structures (Ret. Wall)	N/A	✓	IN
Quantities Tabulated			

Building Plans, Schedules and Details	N/A	✓	IN
Any Building Being Constructed Will Require A Building Permit			

Bridge Plans	N/A	✓	IN
Match Of Wingwalls To Walls On District PS&E			
Items To Be Included On District Plans			
Gravel Backfill			
Drainage			
Barrier			
Approach Slabs			
Slope Protection			
Riprap			
Conduit Runs			
Aesthetic Appearance Of Bridge Connection To Barrier Or Guardrail			
Log Of Test Boring Prepared			
Profile, Alignment, And Stations Match District PS&E			

Traffic Control Plans	N/A	✓	IN
Project Specific Traffic Control Plans			
Detour Plan If Needed – May Require Agreements Thru State Aid			
Detour Sign Details			

Traffic Control Plans (Cont.)	N/A	✓	IN
Bid Items Required For:			

N/A	✓	IN		N/A	✓	IN	
			Change Mess. Sign				Sign Cover
			Chann. Devices				Temp. Conc. Barr.
			Const. Sign Class A				Temp. Illum. Sys.
			Contr. Furn. Const. Signs				Temp. Impact Atten.
			Contr. Pioit. Traff. Control				Truck Mount. Imp. Atten.
			Deline. Light				Temp. Inert. Barr. Config.
			Emerg. Traff. Control				Temp. Pave. Mark.
			Rem. Temp. Pave. Mark				Temp. Sig. Sys.
			Reset. Conc. Barr.				Traff. Control Labor
			Reset. Deline. Light				Traff. Control Super.
			Reset Temp. Imp. Atten.				Traff. Control Vehicle
			Reset Temp. Inert. Barr.				Traff. Safe. Drum
			Sequent. Arrow Sign				Type III Barr.

Reasonable Quantities For Traffic Control Items – Send To Constr. Proj. Engr.'s For Approval			

Special Provisions	N/A	✓	IN
Notice To All Planholders			
Table Of Contents – Computer Generated			
Amendments And GSP's Arranged In Proper Order			
All Special Provisions Entered Into Computer (WORD)			
Appendix Prepared (Good Reproducible Copy)			
Special Provisions For All Non-Standard Items			
Standard Item Table Is A Guide To What Items Need Specials:			
Need A Special Provision For Each Item That Appears On The			
Summary Of Quantities That Is Not Covered In Standard Specification			
Sales Tax Checked, Appropriate GSP Used			
Special Provision For Agree. Stipulation			
Check Amendments And GSP's Against Up-To-Date Index List			
Any Fed. Money In A Proj. Requires All Fed Provisions Per GSP Index			
Prevention Of Environmental Pollution And Preservation Of Public Natural Resources (HB 621)			
Environmental Regulations – Verify Correct For Location			
Obtain Copy Of Any New Ordinance And Get It Added To GSP's			
Archeological, Paleontological			
Wildlife, Fisheries And Pollution Regulations			
Additional Requirements Requested By F&W Etc., (From HPA, WPCP)			
Expiration Date Of Permit And Work "Windows"			
Trainees – Determined In Headquarters			
MBE Goal – Determined In Headquarters			
RR Provisions			
Compare To Local Map To Find RR Lines			
Include RR GSP And Mention In Transmittal Letter			
Forest Practices Permit: Merchantable Timber			
5,000 Or More Board Feet (One Logging Truckload) Use GSP			
Traffic			
Work Period Specs			
Lane Closure Hours With Appropriate Liquid. Damages			
Construction Impact Specs.			
METRO Notification Paragraph			
Time For Completion (Be Very Careful To Select Correct GSP For Intended Purpose)			
Signal Jobs With State Furnished Equipment Have A Unique Provision			
Clearing And Grubbing Including Disposal Of Debris Per Chapter 3			
Removal Of Structures And Obstructions Per GSP Instructions			
Anticipated Quantities Must Be Listed			
Salvaged Items (Verify With Maint.)			
Disposal Of Material (State Waste Site May Require Haul Road Agreements)			
Roadside Seeding Including Fertilizer Application			

Wage Rates Request Form

FED. RATES* ☐ YES ST. RATES ☐ YES

SR _____

TITLE _____

_____

JOB NO.: _____

REVIEWER: _____

DATE: _____

WORK ORDER: _____

EFF. DATE: _____

01 ☐ ADAMS	17 ☐ DOUGLAS	33 ☐ KING	49 ☐ PACIFIC	65 ☐ STEVENS
03 ☐ ASOTIN	19 ☐ FERRY	35 ☐ KITSAP	51 ☐ PEND OREILLE	67 ☐ THURSTON
05 ☐ BENTON	21 ☐ FRANKLIN	37 ☐ KITTITAS	53 ☐ PIERCE	69 ☐ WAHKIAKUM
07 ☐ CHELAN	23 ☐ GARFIELD	39 ☐ KLICKITAT	55 ☐ SAN JUAN	71 ☐ WALLA WALLA
09 ☐ CLALLAM	25 ☐ GRANT	41 ☐ LEWIS	57 ☐ SKAGIT	73 ☐ WHATCOM
11 ☐ CLARK	27 ☐ GRAYS HARBOR	43 ☐ LINCOLN	59 ☐ SKAMANIA	75 ☐ WHITMAN
13 ☐ COLUMBIA	29 ☐ ISLAND	45 ☐ MASON	61 ☐ SNOHOMISH	77 ☐ YAKIMA
15 ☐ COWLITZ	31 ☐ JEFFERSON	47 ☐ OKANOGAN	63 ☐ SPOKANE	99 ☐ ALL (Except those marked)

OCCUPATIONS FOR STATE WAGE RATES FOR ALL CONSTRUCTION
OCCUPATIONS FOR FEDERAL WAGE RATES FOR HIGHWAY CONSTRUCTION

010 ☐ Heat and Frost Insulators and Asbestos Workers
020 ☐ Certified Asbestos Abatement Workers
030 ☐ Boilermakers
050 ☐ Bricklayers & Marble Masons
065 ☐ Cabinet Makers
070 ☐ Carpenters
090 ☐ Cement Masons/Finishers
100 ☐ Communication Tech.
110 ☐ Divers & Tenders
130 ☐ Dredging Workers
150 ☐ Drywall Finishers
170 ☐ Electricians
190 ☐ Lineman - Powerline Construction (Both Required)
230 ☐ Elevator Constructors
250 ☐ Fence Erectors & Laborers
260 ☐ Flaggers
270 ☐ Glaziers
290 ☐ Inland Boatman
310 ☐ Insulation Applicators (Ceiling and Wall)
330 ☐ Ironworkers
350 ☐ Laborers
360 ☐ Laborers (Sewer & Water Const.)
370 ☐ Landscape Construction
390 ☐ Lathers
430 ☐ Mason Tenders, Hod Carriers & Mortarmen
440 ☐ Millwright & Machine Erectors
450 ☐ Painters
480 ☐ Piledrivers
490 ☐ Plasterers
510 ☐ Plasterer Tenders
530 ☐ Plumbers & Pipefitters
570 ☐ Power Equip. Op.
580 ☐ Power Equip. Op. (Sewer & Water Const.)
590 ☐ Refrig. & Air Conditioning Mechanics
610 ☐ Roofer & Waterproofers
620 ☐ Shipbuilders & Ship Repairers
630 ☐ Sheetmetal Workers
635 ☐ Sign Men - Electrical
640 ☐ Sign Hangers & Painters & Constr. Men
650 ☐ Soft Floor Layers
670 ☐ Sprinkler Fitters-Fire Prevention
710 ☐ Sun Screen Installers & Window Tinters
720 ☐ Surveyors
730 ☐ Teamsters
750 ☐ Telephone Line Const. (Outside - Pole & Underground)
770 ☐ Terrazzo Workers & Tile Setters
790 ☐ Tile, Marble & Terrazzo Helpers
820 ☐ Traffic Control Stripers
830 ☐ Well Drillers and Irrigation Pump Installers

* NOTE: See instructions on reverse side for requesting Federal Wage Rates for contracts that include building contruction.

DOT 221.0-9A (Revised 1-91)

FED RATES YES

OCCUPATIONS FOR FEDERAL WAGE RATES FOR BUILDING CONSTRUCTION
* Except within counties 5, 21 and 77.

850 ☐ Asbestos Workers (BLDG.)

855 ☐ Boilermakers (BLDG.)

860 ☐ Bricklayers; Marble Setters (BLDG.)

865 ☐ Carpenters (BLDG.)

870 ☐ Cement Masons (BLDG.)

871 ☐ Communications Tech. (BLDG.)

872 ☐ Drywall Finishers (BLDG.)

875 ☐ Electricians (BLDG.)

880 ☐ Electronic Technicians (BLDG.)

885 ☐ Elevator Mechanics (BLDG.)

890 ☐ Glaziers (BLDG.)

895 ☐ Insulation Applicators (BLDG.)

900 ☐ Ironworkers (BLDG.)

905 ☐ Lathers (BLDG.)

907 ☐ Lineman (BLDG.)

908 ☐ Millwrights (BLDG.)

910 ☐ Painters (BLDG.)

915 ☐ Plasterers (BLDG.)

920 ☐ Plumbers (BLDG.)

925 ☐ Roofers (BLDG.)

930 ☐ Sheet Metal Workers (BLDG.)

935 ☐ Soft Floor Layers (BLDG.)

940 ☐ Sprinkler Fitters (BLDG.)

945 ☐ Terrazzo Workers; Tile Setters (BLDG.)

950 ☐ Tile, Marble, & Terrazzo Finishers (BLDG.)

955 ☐ Landscape Construction (BLDG.)

960 ☐ Laborers (BLDG.)

965 ☐ Power Equipment Operators (BLDG.)

970 ☐ Truck Drivers (BLDG.)

FEDERAL WAGE RATES REQUEST INSTRUCTIONS:

1. When the contract includes federally funded highway and building construction, request the State and Federal rates on front of this form as well as the above Federal rates.

2. When the contract includes only federally funded building construction, request state rates on the front of this form as well as the above Federal rates.

3. When the contract includes building construction in the Counties EXCEPTED above, the Federal rates are obtained by submitting a 308 form to the U.S.D.O.L., Washington DC. Request state rates from the front of this form.

DISCLOSURE OF LOBBYING ACTIVITIES

Approved by OMB
0348-0046

Complete this form to disclose lobbying activities pursuant to 31 U.S.C. 1352
(See reverse for public burden disclosure.)

1. Type of Federal Action:
- ☐ a. contract
- b. grant
- c. cooperative agreement
- d. loan
- e. loan guarantee
- f. loan insurance

2. Status of Federal Action:
- ☐ a. bid/offer/application
- b. initial award
- c. post-award

3. Report Type:
- ☐ a. initial filing
- b. material change

For Material Change Only:
year _____ quarter _____
date of last report _____

4. Name and Address of Reporting Entity:
☐ Prime ☐ Subawardee
Tier _____, *if known:*

Congressional District, *if known:*

5. If Reporting Entity in No. 4 is Subawardee, Enter Name and Address of Prime:

Congressional District, *if known:*

6. Federal Department Agency:

7. Federal Program Name/Description:

CFDA Number, *if applicable:* _____

8. Federal Action Number, *if known:*

9. Award Amount, *if known:*
$

10. a. Name and Address of Lobbying Entity
(if individual, last name, first name, MI):

b. Individuals Performing Services *(including address if different from No. 10a)*
(last name, first name, MI):

(attach Continuation Sheet(s) SF-LLL-A, if necessary)

11. Amount of Payment *(check all that apply):*
$ _____ ☐ actual ☐ planned

12. Form of Payment *(check all that apply):*
- ☐ a. cash
- ☐ b. in-kind; specify: nature _____
  value _____

13. Type of Payment *(check all that apply):*
- ☐ a. retainer
- ☐ b. one-time fee
- ☐ c. commission
- ☐ d. contingent fee
- ☐ e. deferred
- ☐ f. other; specify: _____

14. Brief Description of Services Performed or to be Performed and Date(s) of Service, including officer(s), employee(s), or Member(s) contacted, for Payment Indicated in Item 11:

(attach Continuation Sheet(s) SF-LLL-A, if necessary)

15. Continuation Sheet(s) SF-LLL-A attached: ☐ Yes ☐ No

16. Information requested through this form is authorized by title 31 U.S.C. section 1352. This disclosure of lobbying activities is a material representation of fact upon which reliance was placed by the tier above when this transaction was made or entered into. This disclosure is required pursuant to 31 U.S.C. 1352. This information will be reported to the Congress semi-annually and will be available for public inspection. Any person who fails to file the required disclosure shall be subject to a civil penalty of not less than $10,000 and not more than $100,000 for each such failure.

Signature: _____

Print Name: _____

Title: _____

Telephone No.: _____ **Date:** _____

Federal Use Only:

Authorized for Local Reproduction
Standard Form - LLL

INSTRUCTIONS FOR COMPLETION OF SF-LLL, DISCLOSURE OF LOBBYING ACTIVITIES

This disclosure form shall be completed by the reporting entity, whether subawardee or prime Federal recipient, at the initiation or receipt of a covered Federal action, or a material change to a previous filing, pursuant to title 31 U.S.C. section 1352. The filing of a form is required for each payment or agreement to make payment to any lobbying entity for influencing or attempting to influence an officer or employee of any agency, a Member of Congress, an officer or employee of Congress, or an employee of a Member of Congress in connection with a covered Federal action. Use the SF-LLL-A Continuation Sheet for additional information if the space on the form is inadequate. Complete all items that apply for both the initial filing and material change report. Refer to the implementing guidance published by the Office of Management and Budget for additional information.

1. Identify the type of covered Federal action for which lobbying activity is and/or has been secured to influence the outcome of a covered Federal action.

2. Identify the status of the covered Federal action.

3. Identify the appropriate classification of this report. If this is a followup report caused by a material change to the information previously reported, enter the year and quarter in which the change occurred. Enter the date of the last previously submitted report by this reporting entity for this covered Federal action.

4. Enter the full name, address, city, state and zip code of the reporting entity. Include Congressional District, if known. Check the appropriate classification of the reporting entity that designates if it is, or expects to be, a prime or subaward recipient. Identify the tier of the subawardee, e.g., the first subawardee of the prime is the 1st tier. Subawards include but are not limited to subcontracts, subgrants and contract awards under grants.

5. If the organization filing the report in item 4 checks "Subawardee", then enter the full name, address, city, state and zip code of the prime Federal recipient. Include Congressional District, if known.

6. Enter the name of the Federal agency making the award or loan commitment. Include at least one organizational level below agency name, if known. For example, Department of Transportation, United States Coast Guard.

7. Enter the Federal program name or description for the covered Federal action (item 1). If known, enter the full Catalog of Federal Domestic Assistance (CFDA) number for grants, cooperative agreements, loans, and loan commitments.

8. Enter the most appropriate Federal identifying number available for the Federal action identified in item 1 (e.g., Request for Proposal (RFP) number; Invitation for Bid (IFB) number; grant announcement number; the contract, grant, or loan award number; the application/proposal control number assigned by the Federal agency). Include prefixes, e.g., "RFP-DE-90-001."

9. For a covered Federal action where there has been an award or loan commitment by the Federal agency, enter the Federal amount of the award/loan commitment for the prime entity identified in item 4 or 5.

10. (a) Enter the full name, address, city, state and zip code of the lobbying entity engaged by the reporting entity identified in item 4 to influence the covered Federal action.

    (b) Enter the full names of the individual(s) performing services, and include full address if different from 10 (a). Enter Last Name, First Name, and Middle Initial (MI).

11. Enter the amount of compensation paid or reasonably expected to be paid by the reporting entity (item 4) to the lobbying entity (item 10). Indicate whether the payment has been made (actual) or will be made (planned). Check all boxes that apply. If this is a material change report, enter the cumulative amount of payment made or planned to be made.

12. Check the appropriate box(es). Check all boxes that apply. If payment is made through an in-kind contribution, specify the nature and value of the in-kind payment.

13. Check the appropriate box(es). Check all boxes that apply. If other, specify nature.

14. Provide a specific and detailed description of the services that the lobbyist has performed, or will be expected to perform, and the date(s) of any services rendered. Include all preparatory and related activity, not just time spent in actual contact with Federal officials. Identify the Federal official(s) or employee(s) contacted or the officer(s), employee(s), or Member(s) of Congress that were contacted.

15. Check whether or not a SF-LLL-A Continuation Sheet(s) is attached.

16. The certifying official shall sign and date the form, print his/her name, title, and telephone number.

Public reporting burden for this collection of information is estimated to average 30 minutes per response, including time for reviewing instructions, searching existing data sources, gathering and maintaining the data needed, and completing and reviewing the collection of information. Send comments regarding the burden estimate or any other aspect of this collection of information, including suggestions for reducing this burden, to the Office of Management and Budget, Paperwork Reduction Project (0348-0046), Washington, D.C. 20503

Certification for Federal-Aid Contracts

The prospective participant certifies, by signing and submitting this bid or proposal, to the best of his or her knowledge and belief, that:

(1) No Federal appropriated funds have been paid or will be paid, by or on behalf of the undersigned, to any person for influencing or attempting to influence an officer or employee of any Federal agency, a Member of Congress, an officer or employee of Congress, or an employee of a Member of Congress in connection with the awarding of any Federal contract, the making of any Federal grant, the making of any Federal loan, the entering into of any cooperative agreement, and the extension, continuation, renewal, amendment, or modification of any Federal contract, grant, loan, or cooperative agreement.

(2) If any funds other than Federal appropriated funds have been paid or will be paid to any person for influencing or attempting to influence an officer or employee of any Federal agency, a Member of Congress, an officer or employee of Congress, or an employee of a Member of Congress in connection with this Federal contract, grant, loan, or cooperative agreement, the undersigned shall complete and submit Standard Form-LLL, "Disclosure Form to Report Lobbying," in accordance with its instructions.

This certification is a material representation of fact upon which reliance was placed when this transaction was made or entered into. Submission of this certification is a prerequisite for making or entering into this transaction imposed by Section 1352, Title 31, U.S. Code. Any person who fails to file the required certification shall be subject to a civil penalty of not less than $10,000 and not more than $100,000 for each such failure.

The prospective participant also agrees by submitting his or her bid or proposal that he or she shall require that the language of this certification be included in all lower tier subcontracts, which exceed $100,000 and that all such subrecipients shall certify and disclose accordingly.

CONTRACT

THIS AGREEMENT, made and entered into this _____ day of _____, 19 _____, between the city /county of _____ under and by virtue of Title 35 RCW (cities and towns) or Title 36 RCW (counties), as amended and

hereinafter called the Contractor.

WITNESSETH:

That in consideration of the terms and conditions contained herein and attached and made a part of this agreement, the parties hereto covenant and agree as follows:

I. The Contractor shall do all work and furnish all tools, materials and equipment for

in accordance with and as described in the attached plans and specifications, and the standard specifications of the Washington State Department of Transportation which are by the reference incorporated herein and made part hereof and, shall perform any changes in the work in accord with the Contract Documents.

The Contractor shall provide and bear the expense of all equipment, work and labor, of any sort whatsoever that may be required for the transfer of materials and for constructing and completing the work provided for in these Contract Documents except those items mentioned therein to be furnished by the city/county of _____.

II. The _____ hereby promises and agrees with the Contractor to employ,
city/county

and does employ the Contractor to provide the materials and to do and cause to be done the above described work and to complete and finish the same in accord with the attached plans and specifications and the terms and conditions herein contained and hereby contracts to pay for the same according to the attached specifications and the schedule of unit or itemized prices at the time and in the manner and upon the conditions provided for in this contract.

III. The contractor for himself/herself, and for his/her heirs, executors, administrators, successors, assigns, does hereby agree to the full performance of all the covenants herein contained upon the part of the Contractor.

IV. It is further provided that no liability shall attach to the _____ by reason of entering into this contract, except as provided herein.
City/County

IN WITNESS WHEREOF, the Contractor has executed this instrument, on the day and year first below written and the Local Agency Approving Authority has caused this instrument to be executed by and in the name of the said _____ the day and year first above written.
City/County

Executed by the Contractor _____ _____ , 19 .

_____

_____

_____
Contractor

Executed by the Local Agency _____ _____ , 19 .

_____

(SEAL)

_____

_____
Local Agency Approving Authority

_____
(Local Agency Attorney)

Contract
Hwy. & Bldg. Const.

DOT 272-007A
1/90

Washington State
Department of Transportation

Subcontractor List

Prepared in compliance with Chapter 378 Laws of 1993

To be Submitted with the Bid Proposal

Project Name _____

Subcontractors that are proposed to perform categories of work exceeding 10 percent of the contract price must be listed below. The categories of work are to be listed below the subcontractor's name. If no subcontractor fits this criteria, enter "none proposed."

Subcontractor Name _____
Categories of Work _____

Subcontractor Name _____
Categories of Work _____

Subcontractor Name _____
Categories of Work _____

Subcontractor Name _____
Categories of Work _____

Subcontractor Name _____
Categories of Work _____

Subcontractor Name _____
Categories of Work _____

Subcontractor List

To be Submitted with the Bid Proposal

Subcontractor Name _____
Categories of Work _____

Subcontractor Name _____
Categories of Work _____

Subcontractor Name _____
Categories of Work _____

Subcontractor Name _____
Categories of Work _____

Subcontractor Name _____
Categories of Work _____

Subcontractor Name _____
Categories of Work _____

Subcontractor Name _____
Categories of Work _____

Subcontractor List

To be Submitted with the Bid Proposal

Categories of work exceeding 10 percent of the contract price to be performed by the prime contractor must be listed below. If no categories of work to be performed by the prime contractor exceeds 10 percent, enter "NONE."

Prime Contractor Name _____

Categories of Work _____

NON-COLLUSION DECLARATION

I, by signing the proposal, hereby declare, under penalty of perjury under the laws of the United States that the following statements are true and correct:

1. That the undersigned person(s), firm, association or corporation has (have) not, either directly or indirectly, entered into any agreement, participated in any collusion, or otherwise taken any action in restraint of free competitive bidding in connection with the project for which this proposal is submitted.

2. That by signing the signature page of this proposal, I am deemed to have signed and have agreed to the provisions of this declaration.

NOTICE TO ALL BIDDERS

To report bid rigging activities call:

1-800-424-9071

The U.S. Department of Transportation (USDOT) operates the above toll-free "hotline" Monday through Friday, 8:00 a.m. to 5:00 p.m., eastern time. Anyone with knowledge of possible bid rigging, bidder collusion, or other fraudulent activities should use the "hotline" to report such activities.

The "hotline" is part of USDOT's continuing effort to identify and investigate highway construction contract fraud and abuse and is operated under the direction of the USDOT Inspector General. All information will be treated confidentially and caller anonymity will be respected.

The bidder is hereby advised that by signature of this proposal he/she is deemed to have acknowledged all requirements and signed all certificates contained herein.

A proposal guaranty in an amount of five percent (5%) of the total bid, based upon the approximate estimate of quantities at the above prices and in the form as indicated below, is attached hereto:

CASH	☐	**IN THE AMOUNT OF** _____
CASHIER'S CHECK	☐	_____ DOLLARS
CERTIFIED CHECK	☐	**($_____) PAYABLE TO THE STATE TREASURER**
PROPOSAL BOND	☐	**IN THE AMOUNT OF 5% OF THE BID**

** Receipt is hereby acknowledged of **addendum(s) No.(s)** _____, _____ & _____.

SIGNATURE OF AUTHORIZED OFFICIAL(S)

_____

_____

PROPOSAL MUST BE SIGNED

FIRM NAME _____

(ADDRESS) _____

_____

STATE OF WASHINGTON CONTRACTOR'S LICENSE NUMBER _____

FEDERAL ID NO. |__|__|__|__|__|__|__|__|__|

Note:
(1) This proposal form is not transferable and any alteration of the firm's name entered hereon without prior permission from the Secretary of Transportation will be cause for considering the proposal irregular and subsequent rejection of the bid.
(2) Please refer to section 1-02.6 of the standard specifications, re: "Preparation of Proposal," or "Article 4" of the Instructions to Bidders for building construction jobs.
(3) Should it be necessary to modify this proposal either in writing or by electronic means, please make reference to the following proposal number in your communication. _____

Washington State
Department of Transportation

Disadvantaged Business Enterprise Utilization Certification

To be eligible for award of this contract the bidder must fill out and submit, as a part of his/her proposal, the following certification relating to Disadvantaged Business Enterprise (DBE) requirements. This certification shall be deemed a part of the resulting contract. Failure to fill out and submit this certification, the inclusion of a false certification, or insufficient projected use of DBEs, shall be considered as evidence that the proposal is non-responsive to the invitation to bid. ***Information on certified firms is available from OMWBE, phone (360) 753-9693.***

_____ certifies that the following Disadvantaged Business Enterprise(s)
Name of Bidder

(DBE) have been contacted regarding participation on this project and, if it is the successful bidder on this project, it shall award subcontracts to or enter into supply agreements with the following DBEs as indicated: (if necessary, use additional sheet).

Name of DBE Certification No.	CAPACITY (Prime, Joint Venture, Subcontractor, Manufacturer, Regular Dealer, or Service Provider)	Description of Work	Amount to be Applied Towards Goal *
1.			
2.			
3.			
4.			
5.			
6.			
7.			
8.			
9.			
10.			

Disadvantaged Business Enterprise Subcontracting Goal: _____ DBE Total $ _____ **

* *See the section "Counting DBE Participation Toward Meeting the Goal" in the Special Provisions of this Contract.*

** *The Contracting Agency will utilize the above data to determine whether or not the bidder has met the goal or the average goal attainment of all bidders.*

This chapter is used by local agencies wanting the Washington State Department of Transportation (WSDOT) to advertise and award their Federal Highway Administration (FHWA) construction contracts at the service center level or at the regional level. For these agencies, Chapter 51, WSDOT Administered Projects, will also apply.

45.1 General Discussion

The Regional Administrator will appoint a WSDOT Project Engineer to administer project construction (Chapter 51). The Project Engineer will administer the project in accordance with the *Local Agency Guidelines* manual and in the same manner as other FHWA funded projects.

The documents that the local agency must submit to WSDOT in order to have a project advertised and awarded by the state are listed in Chapter 51, which describes the procedures for advertising and awarding a construction contract when WSDOT is the awarding authority.

45.2 Submittals

When WSDOT is to advertise and award a construction contract on an FHWA project, the local agency will prepare and submit the following documents to WSDOT. (Additional details on the content and format of these documents are found in Chapter 44, Plans, Specifications, and Estimates, and in the WSDOT *Construction Manual.*)

.21 Contract Plans, Specifications, and Estimates (PS&E). The originals and one copy of these shall be submitted to the Regional TransAid Engineer. Review of the PS&E and bridge plans by WSDOT must be scheduled well in advance of the advertising date of the project. WSDOT review time on complex projects varies between 12 to 18 weeks depending on the type of project and whether the project is advertised by the region or by the service center. Contact the Regional TransAid Engineer to coordinate the submittal time of the PS&E and bridge plans, and for an advance estimate of the time and cost for the reviews.

.22 Local Agency Letter of Financial Responsibility. See Chapter 44, Plans, Specifications, and Estimates, and Appendix 44.64.

45.3 Procedures

.31 Olympia Service Center Advertising and Award. The following process will be used for reviewing contract documents, advertising for bids, evaluating bids, and awarding a construction contract.

a. The local agency prepares the PS&E package and submits it to the Regional TransAid Engineer.

b. The Regional TransAid Engineer reviews the PS&E package for completeness and sends it to the Regional Plans Engineer. The Regional Administrator assigns a WSDOT Project Engineer to administer the project construction (see Chapter 51).

c. The Regional Plans Engineer reviews the PS&E and sends it to the WSDOT Olympia Service Center Plans Branch for review and approval by the State Design Engineer. At this time, an advertising date is set.

d. After its review, the Plans Branch sends out office copies of the PS&E to the local agency and other offices within WSDOT for their final review prior to advertising.

e. WSDOT advertises the project for at least three weeks.

f. WSDOT receives bids during the period set aside for bid preparation and receipt.

g. On the date established in the bid advertisement, WSDOT opens and reads the bids received.

h. WSDOT tabulates and evaluates the bids, and sends the bid results to the Regional TransAid Engineer.

i. The Regional TransAid Engineer advises the local agency of the bid results.

j. The Local Agency Agreement must be supplemented if any overrun or underrun occurs beyond the authorized amount. See Section 22.3.

k. WSDOT awards the construction contract to the lowest responsible bidder.

l. The WSDOT Regional Administrator and Olympia Service Center Construction Office administer the project in the same manner as other FHWA projects and in accordance with departmental policy.

.32 Regional Advertising and Award. Whenever requested by the local agency, the region advertises and awards projects in accordance with WSDOT's directive D 27-02. No project cost limitation applies. When the engineer's contract estimate exceeds $50,000, the bid participants are required to furnish a bid deposit and a contract bond and they shall be prequalified under Section 1-02.1 of the *Standard Specifications*. The region will publish the call for bids in not less than one trade paper of general circulation in the state. Bid notices will be submitted to the local chapter of the Associated General Contractors (AGC), the established minority and women's association within the region, any other organization expressing interest in the project, and others as directed by WSDOT's Pre-Contract Administration.

The following process will be used for reviewing contract documents, advertising for bids, evaluating bids, and awarding a construction contract:

a. The local agency prepares the PS&E and proposal forms and submits them to the Regional TransAid Engineer for region advertisement and award of the contract. Amendments and General Special Provisions of the *Standard Specifications* should be used to the maximum extent possible.

b. The Regional TransAid Engineer reviews the PS&E package for completeness and sends it to the Regional Plans Engineer for region review and final approval. At this time, an advertising date is set. The Regional Administrator assigns a WSDOT Project Engineer to administer project construction.

c. After the region's review, the Regional Plans Engineer sends office copies of the PS&E out to the local agency, Regional TransAid, and other offices within the region office for their final review prior to advertising.

d. The region advertises the project for at least three weeks.

e. The region receives bids during the period set aside for bid preparation and receipt.

f. On the date established in the bid advertisement, the region opens and reads the bids received.

g. The region tabulates and evaluates the bids, and sends the bid results to the local agency via the Regional TransAid Engineer.

h. The Regional TransAid Engineer consults with the local agency prior to the project award.

   If the lowest responsible bid does not exceed the engineer's contract estimate by 10 percent or more, the region awards the contract.

   If the lowest responsible bid exceeds the engineer's estimate by 10 percent or more, the Regional Administrator shall submit a copy of the bid, a tabulation of all bids, justification to accept or reject the bid, and any other related documents to the local agency for approval or disapproval.

i. If approval is made by the local agency, the region will award and execute the contract to the lowest responsible bidder.

   (***Note:*** Before award, the Local Agency Agreement must be supplemented when the contract amount is greater than the authorized amount.)

j. The WSDOT Regional Administrator and Regional Construction Office administer the project in the same manner as other federal aid projects and in accordance with department policy.

k. The region bills the agency in accordance with the terms of the Local Agency Agreement.

21:P:LAG4B

This chapter is used by local agencies operating under Certification Acceptance (Chapter 13) and choosing to advertise and award construction contracts themselves. Chapter 52, Local Administered Projects, will also apply to these agencies.

Local agencies wanting to have the Washington State Department of Transportation (WSDOT) to administer their construction contracts should refer to Chapter 51, WSDOT Administered Projects.

46.1 General Discussion

Local agencies may let contracts for their projects provided that the following conditions are met:

.11 **T**he local agency uses the advertising and award procedures outlined in this section to advertise for bids, select the lowest responsible bidder, and award the contract.

.12 A Local Agency Agreement between the state and local agency is in effect setting forth the conditions under which the project will be constructed.

.13 The local agency is participating in the cost of the project or has other special interests in it.

.14 The local agency is certified for project administration in accordance with Chapter 13, Becoming Certified to Administer FHWA Projects.

No project can be advertised until the local agency has approved the PS&E, the project's right-of-way has been certified to the Federal Highway Administration (FHWA), construction funds have been authorized by the Assistant Secretary for TransAid, and a contract number has been obtained from the Regional TransAid Engineer.

46.2 Procedures

The Regional TransAid Engineer will monitor local agency compliance with the following procedures for bid advertising and processing of projects.

.21 **Funding**. A Local Agency Agreement and construction funds must be authorized by the Assistant Secretary for TransAid before a contract is advertised.

.22 **Bidding Procedures**. The local agency is prohibited from establishing any procedures or requirements for qualification or licensing of contractors, which prevents the submission of bids or prohibits consideration of bids submitted by any responsible contractor, whether resident or nonresident of the state, except as outlined below.

The prequalification of prospective bidders is the responsibility of the local agency. WSDOT will not prequalify prospective bidders for local agency projects. A local agency may at its option use the WSDOT prequalification procedure specified in the WSDOT/APWA *Standard Specifications*. When an agency does not prequalify prospective bidders, they should afford 10 days after notification for the low bidder to provide evidence of capability to perform the work. The evaluation of capability should include consideration of experience, personnel, equipment, financial resources, and performance record; the information should be sufficient to enable the bidder to obtain the required qualification rating prior to the contract award.

Qualification must, as a minimum, consist of bonding capability as required by state law and compliance with licensing requirements of state law. The local agency may include additional requirements.

When an agency is considering tied bids, the tied projects must be open to bid by disadvantaged business enterprises (DBEs). Specialized contracts such as fencing, landscaping, concrete work, etc., should be considered to permit maximum opportunity for disadvantaged business enterprises.

When the DBE participation goal is included in the contract provisions, meeting the goal is part of the bidding requirements, as explained in Chapter 26, Disadvantaged Business Enterprises, and Chapter 44, Plans, Specifications, and Estimates.

For all FHWA projects, bidding opportunities, on a nondiscriminatory basis, shall be afforded to all qualified bidders regardless of state boundaries, race, sex, color, or national origin.

No bidder shall be disqualified or prevented from competitive bidding by restricting the purchase of a surety bond or insurance policy from any surety or insurer outside the state and authorized to do business with the state.

.23 **Preparation of the Project Proposal**. See WSDOT/APWA *Standard Specification* 1.02.6.

.24 **Advertising of the Project**. FHWA projects previously approved should be advertised for a three-week period prior to opening of bids. The three-week advertising period begins when the first of two advertisements is published. If an agency wants an advertising period of less than three weeks, documentation by the CA local agency for the shorter period must be in the project file. Examples of shorter advertising periods are as follows:

- Emergency correction of roadways or bridges.
- To meet the conditions of a fisheries permit.
- To meet the conditions of a Bureau of Reclamation Permit (Irrigation Canal).

The project will be advertised in the official legal publication for the agency and, if necessary, other newspapers to provide the widest possible, coverage commensurate with the size of the project.

The local agency will comply with the standard USDOT Title VI Assurances by inclusion of the following language in the solicitations for bids:

> "The local agency hereby notifies all bidders that it will affirmatively insure that in any contract entered into pursuant to this advertisement, disadvantaged business enterprises will be afforded full opportunity to submit bids in response to this invitation and will not be discriminated against on the grounds of race, color, or national origin in consideration for an award."

Should an addendum be necessary during the advertising period to correct or add something to the bid or plan data, such addenda shall be approved by the CA local agency prior to transmittal to the individual contractors holding the plans, specifications, and bid document data. Each bidder shall present with their bid written notice of their receipt of each addendum received.

.25 Bid Opening. All bids received in accordance with the terms of the advertisement shall be publicly opened and announced, either item by item or by total amount.

If any bid received is not read, the name of the bidder and the reason for not reading the bid shall be publicly announced at the bid opening.

Adequate justification for rejecting any bids must be documented by the local agency.

.26 Evaluation Bids for Award. The local agency shall verify that all required bid documents have been properly submitted and executed by all bidders. All bids are then reviewed for accuracy, unbalancing of bid items, etc., and tabulations checked and confirmed. Any corrections to the bid tabulations are made, if necessary, in accordance with the WSDOT/APWA *Standard Specifications*, Section 1-02 and 1-03.

When there is a specified DBE goal for the project, the successful bidder will be selected on the basis of having submitted: (1) the lowest responsive bid which has met the DBE goal; or (2) when the DBE participation is less than the specified goal, responsiveness will be determined on the basis of good faith efforts to attain the goal.

When the Special Provisions contain an incentive clause encouraging the contractor to propose changes to accomplish the project's functional requirements at less cost, and the successful bidder has used this option, the proposed changes would be carefully studied and a justification prepared supporting or not supporting the changes.

The local agency shall prepare a tabulation of bids showing the item details for at least the three lowest acceptable bids.

The local agency shall document the reason(s) for rejecting the low bid and may reject all bids for any reason(s).

Reasons for justifying an unusual award:

- Where the competition is good; or
- Where the project is essential to the public interest (safety, emergency repair, etc.); or
- Where the engineer's estimate is clearly in error to a significant amount; or
- Where readvertising would likely result in higher bids.

If the local agency determines that the lowest bidder is not qualified, it shall document those findings prior to awarding the bid to the next-lowest responsible bidder.

The Local Agency Agreement must be supplemented if any overrun or underrun occurs beyond the authorized amount. See Section 22.3.

One originally signed Supplemental Agreement form must be submitted to the Regional TransAid Engineer. This supplemental agreement form will be retained by WSDOT. It is the responsibility of the local agency to submit an additional supplemental agreement form or copy if they need an executed supplemental agreement for their files.

.27 Award of Contract. After bids have been tabulated and evaluated in accordance with the procedures described above, the construction contract may be awarded to the lowest responsive bidder.

After award by the local agency, the contractor must be advised of the award in writing. For an example of an award letter for a contract that has an identified DBE goal, see Appendix 46.42. The second, third, fourth, and fifth paragraphs must be included in the local agency letter. An award letter for contracts without a DBE goal can be similar but would not include the second, third, fourth, and fifth paragraphs.

.28 Execution of Contract. Local agencies shall not execute a contract with any contractor who is not registered or licensed in accordance with state laws.

The local agency prepares the necessary documents and forwards them for execution by the successful bidder and the proper officials of the local agency.

A sample of a standard contract agreement is in Appendix 44.63. The Regional TransAid Engineers can furnish these standard forms upon request.

46.3 Submittal of Award Data

Before construction begins, the local agency must submit the following information to the Regional TransAid Engineer:

- Tabulation of bids
- Engineer's estimate
- Award letter to the contractor
- DBE participation (also required for contracts without assigned DBE goals, Form 272-056A)
- The estimated completion date or the number of working days for the contract

46.4 Appendixes

46.41 Sample Request for Concurrence to Award

46.42 Sample Condition of Award Letter (DBE Contract Goals)

46.43 Sample Contract Bond

22:P:LAG4B

Sample Request for Concurrence to Award

Project Title _____ FHWA Project No. _____

Attached are the following required documents plus any additional information that may be applicable:

_____ Bid proposal from the lowest responsible bidder.

_____ Bid bond.

_____ Noncollusion Plan Certification.

_____ DBE Certification (if required).

_____ Tabulation of Bids.

_____ FHWA cost breakdown showing total project cost, FHWA participation and Local Agency participation.

_____ Additional documents.

_____ _____

Date Local Agency Engineer

_____ _____

Date Approving Authority

Sample Condition of Award Letter Local Agency Letterhead

Date of Award

To: — contractor —

Project Title
FA No.
Contract No.

This will advise that the contract for the above referenced project has been awarded to your firm at your bid price of $_____.

This letter shall become a contract specification at the time of award.

It is the policy of the United States Department of Transportation and the — local agency's name — that Disadvantaged Business Enterprises (DBE), as defined in the specifications for this contract, shall have the maximum opportunity to participate in the performance of contracts financed in whole or in part with federal funds. Consequently, (except as specifically provided in the specifications for this contract) the requirements of 49 CFR 23 apply to this contract.

As contractor, you are agreeing to ensure that DBE as defined in the specifications of this contract have the maximum opportunity to participate in the performance of this contract. In this regard, you are obliged to take all necessary and reasonable steps in accordance with 49 CFR 23 to ensure DBEs are informed of this project and given equal consideration in awarding of work. You are legally bound not to discriminate on the basis of race, color, national origin, or sex in theperformance of this contract.

The award of this contract was made with the understanding that you will be subcontracting the following bid items to the firms as indicated:

Subcontractor	Bid Items	Subcontractor Approx. Amount	Bid Proposal Amount

The total of the above subcontract(s) is $_____. The contract will be forwarded to you at an early date. The contract must be signed and returned in accordance with the mailing instructions furnished with the contract documents. Please return these documents within _____ calendar days after the date of award.

Very truly yours,

— local agency —

cc: Regional TransAid Engineer

CONTRACT BOND

KNOW ALL MEN BY THESE PRESENTS, That

of _____, as Principal, and _____

as Surety, are jointly and severally held and bound unto the _____
city/county

in the penal sum of Dollars ($ _____), for the payment of which we jointly and severely bind ourselves, our heirs, executors, administrators, and assigns, and successors and assigns, firmly by these presents.

THE CONDITION of this bond is such that whereas, on the _____

day of _____ A.D., 19 _____ , the said _____

Principal, herein, executed a certain contract with the _____
city/county

by the items, conditions and provisions of which contract the said _____ ,

Principal, herein, agree to furnish all material and do certain work, to wit: That _____

_____ will undertake and complete the construction of

according to the maps, plans and specifications made a part of said contract, which contract as so executed, is hereunto attached, is now referred to and by reference is incorporated herein and made a part hereof as fully for all purposes as if here set forth at length. The bond shall cover all approved change orders as if they were in the original contract.

NOW, THEREFORE, If the Principal herein shall faithfully and truly observe and comply with the terms, conditions and provisions of said contract in all respects and shall well and truly and fully do and perform all matters and things by
undertaken to be performed under said contract, upon the terms proposed therein, and within the time prescribed therein, and until the same is accepted, and shall pay all laborers, mechanics, subcontractors and material men, and all persons who shall supply such contractor or subcontractor with provisions and supplies for the carrying on of such work, and shall in all respects faithfully perform said contract according to law, then this obligation to be void, otherwise to remain in full force and effect.

WITNESS our hands this _____ day of _____, 19 _____

_____

_____

_____

PRINCIPAL

_____

_____

_____

ATTORNEY-IN-FACT, SURETY

_____

NAME AND ADDRESS LOCAL OFFICE OF AGENT

APPROVED:

_____

CITY/COUNTY

By: _____

APPROVING AUTHORITY

Date: _____, 19 _____

SURETY BOND NUMBER

CONTRACT NUMBER

Contents

GUIDELINE SECTIONS

Guidelines Overview

- 11 Introduction
- 12 FHWA Funding Programs
- 13 Becoming Certified to Administer FHWA Projects
- 14 Developing Projects Using the Local Agency Guidelines

General Project Development (Applicable to All Projects)

- 21 The Project Prospectus
- 22 The Local Agency Agreement
- 23 Progress Billings
- 24 Environmental Processes
- 25 Right-of-Way Procedures
- 26 Disadvantaged Business Enterprises
- 27 Equal Employment Opportunity and Training

Special Project Development (Applicable to Some Projects)

- 31 Using Consultants
- 32 Railroad/Highway Crossing Program
- 33 Emergency Relief Program
- 34 Bridge Selection and Scoping

Design

- 41 General
- 42 Design Standards
- 43 Location and Design Approval
- 44 Plans, Specifications, and Estimates
- 45 State Advertising and Award Procedures
- 46 Local Advertising and Award Procedures

Construction and Post-Construction

- 51 WSDOT Administered Projects
- 52 Local Administered Projects
- 53 Project Closure

Miscellaneous

- 61 Local Agency Force Projects
- 62 Enhancement Projects
- 63 NHS Projects
- 64 Bridge Inspections
- 65 Management Systems

List of Forms

Acronyms/Glossary of Terms

Index

This chapter is used on NHS or non-NHS routes by those local agencies for whom the Washington State Department of Transportation (WSDOT) advertises and awards projects.

51.1 General Discussion

WSDOT is responsible for the proper expenditure of Federal Highway Administration (FHWA) funds on local agency projects and will administer all construction activities to ensure compliance with applicable rules and that all documentation is in order.

WSDOT will assign a contract number after the PS&E has been approved and construction funds have been authorized. No FHWA reimbursement for construction can be made until a contract number has been assigned. Reimbursement will follow the method indicated in Chapter 22, The Local Agency Agreement.

Non-NHS projects will be administered in accordance with Chapter 52 of the LAG manual. NHS projects administered by WSDOT will be in accordance with the CA procedures. The Regional Administrator will select one of the following for administration of the project.

1. Assign a WSDOT Project Engineer and WSDOT staff.
2. Assign a WSDOT Project Engineer and a mix of WSDOT staff and local agency staff.
3. Assign a WSDOT Project Engineer and local agency staff.
4. Assign a WSDOT Project Engineer and a WSDOT-selected consultant's engineering staff (when available WSDOT and/or local agency staff will be used to supplement the consultant's staff).

The local agency will appoint a project coordinator to be the contact person for the Project Engineer.

51.2 Preconstruction Conference

As soon as practicable after a contract is awarded, the Project Engineer should arrange a conference with the contractor and shall notify the local agency project coordinator and Regional TransAid Engineer of the time and place.

Minutes of the conference should be taken and copies transmitted to the local agency, the contractor, and all other agencies and firms that were invited to the conference.

51.3 Changes and Extra Work

The Project Engineer must receive local agency concurrence of changes and funding before submitting any change order to the WSDOT Assistant Administrator for Regional Operations. The Project Engineer will prepare the change order in the WSDOT Construction Contracts Information System (CCIS). The change order is sent to the local agency for their concurrence and signature and a copy is sent to the Regional TransAid Engineer.

If a change order or the accumulation of change orders will result in the final cost of the project exceeding the amount authorized in the Local Agency Agreement, the local agency (prior to performing the work) must submit a supplement to the Local Agency Agreement in accordance with Chapter 22 of this manual. The local agency should contact the Regional TransAid Engineer for assistance in preparing the supplement and to determine if FHWA funds are available for the overrun.

A copy of the executed change order will be sent by the Project Engineer to the local agency.

2:P:LAG5

This chapter is used for non-NHS routes by local agencies operating under Certification Acceptance and choosing to administer construction contracts themselves. In the sequence of project development, this follows Chapter 46, Local Advertising and Award Procedures. For NHS routes, refer to Chapter 63, NHS Projects.

Local agencies whose construction contracts are administered by the Washington State Department of Transportation (WSDOT) should refer to Chapter 51, WSDOT Administered Projects.

The following chart illustrates the contract administration and oversight responsibilities for the Federal Highway Administration (FHWA) (F), WSDOT (S), and local CA agencies(L):

	Action	Local CA non-NHS	Local non-CA Agency non-NHS
a.	Construction Fund Auth.	F	F
b.	Changes/Extra Work/ Nonparticipation	L	S/L
c.	Claims	L	S/L
d.	Project Inspections	L	S/L
e.	Final Inspection	S	S
f.	Final Acceptance	S	S

52.1 General Discussion

WSDOT is responsible for the proper expenditure of FHWA funds on local agency projects. TransAid will consult and work with local agencies as needed and will perform systematic project management reviews to ensure that proper procedures are followed.

Except for transportation enhancement projects, construction will be administered and materials will be inspected in accordance with the WSDOT *Construction Manual* and this chapter of the LAG. For exceptions, see Section 52.32. In case of conflicting guidelines, this chapter governs the *Construction Manual*. FHWA projects are subject to EEO and DBE compliance reviews by WSDOT. Refer to Chapter 62, Enhancement Projects, and Chapter 63, NHS Projects, for criteria governing construction of NHS and enhancement projects.

Appendix 52.95 illustrates the major timeline for construction contracts and provides more details for specification references.

52.2 Preconstruction Conference

After a contract is awarded, the Local Agency should arrange a conference with the contractor. The Local Agency Engineer shall notify the Regional TransAid Engineer of the time and place of the conference.

On large, complex projects, a preconstruction conference should be held before each construction phase. It may be desirable to hold separate conferences for some specialized construction items such as paving, roadside planting, or electrical work. The preconstruction conference may include a partnering session if appropriate. For a sample conference agenda, refer to Appendix 52.91.

The meeting should be documented and copies of the minutes transmitted to the Regional TransAid Engineer and each agency, organization, and firm that has involvement or interest in the project (see Appendix 52.92).

52.3 Quality Control

The quality of materials and workmanship on a project must conform to the contract specifications so that the public funds expended will have purchased a safe, economical, and fully functional transportation facility.

.31 General. The source for each type of material must be approved by the local agency.

WSDOT's Materials Lab maintains and updates a "Materials Sources Data" (MSD) book and data on the mainframe computer. To access the information on the MSD book or computer data, the local agency should contact the Regional TransAid Engineer. Upon request, the Regional TransAid Engineer will provide a hard copy of material sources or a complete MSD book and instruct the local agency of the updating process.

Reimbursement of FHWA funds may be denied for work done contrary to or in disregard of the contract documents.

Measurement of materials shall be as specified in the contract documents.

The Local Agency Engineer shall follow the quality control requirements in Section 9-5 of the WSDOT *Construction Manual* for taking acceptance samples and tests.

.32 Exceptions to the WSDOT *Construction Manual*. The following exceptions to the WSDOT *Construction Manual* may be used by the local agency, in developing a plan for construction oversight. The agency may submit their plan through the Regional TransAid Engineer for review and comment by the TransAid Operations Engineer. If these methods are not utilized, the WSDOT *Construction Manual* shall prevail.

The following procedures are approved exceptions to the *Construction Manual* requirements:

- The local agency may develop their own Record of Materials, and approve manufacturers not listed on the approved WSDOT manufacturers list.

- Asphalt plant inspectors and scalepersons are not required at established commercial sources. This exception does not allow the agency to eliminate acceptance sampling of the materials.
- Local agencies have the option of independent assurance sampling.
- The following items may be accepted with an approved catalogue cut and documented by visual inspection or a manufacturer's material certification (provided manufacturer's certification is based on actual testing):
  - Electrical items
  - Paving or geotextile fabrics
  - Fencing of any kind
  - Landscaping or irrigation items
  - Glare screens
  - Traffic buttons or paints
  - Guardrail items
- Minor quantities may be increased to 450 tonnes (500 tons) for all aggregate items, treated or untreated, from an established commercial source.
- Local agencies may test their own signal cabinets.
- Local agencies may lower the density testing requirements to 90 percent of the rice density for nonstructural overlay pavement designs with a thickness of 30 to 50 mm (1.25 to 2 inches). This should be limited to areas or projects with documented foundation problems and on overlay of existing pavements.
- Local agencies may use a minimum of two sets of concrete cylinders to verify the compressive strength requirements for commercial concrete on a contract.

52.4 Progress Payments

Progress payments must be based on measurements of work performed so that the contractor can be fairly compensated and so that public funds will not be expended on work that has not been done.

.41 General. Progress estimates should be prepared on a preselected date each month.

The Local Agency shall document the quantities paid each month.

Progress estimates should be prepared promptly and may be forwarded to the contractor for review and signature.

.42 Statement of Intent to Pay Prevailing Wages. The contractor and subcontractors of every tier shall submit form LI 700-29 to L&I for approval of the wage rates they intend to pay. Each statement must be accompanied by the filing fee established by L&I (required by RCW 39.12.030 and 040).

The approved pink copy of form LI 700-29 shall be on file with the local agency before any payment is made to the contractor. Subcontractors of every tier shall have an approved copy of this form on file with the local agency before any payment can be made for their work.

52.5 Changes and Extra Work

Prior to beginning work, an agency should have a written policy for the approval of change orders to ensure that approval, either verbal or written, is given and documented.

It is important to distinguish between actual changes to the contract work and normal overruns and underruns that may occur. Whenever a change in the contract is required, the agency shall prepare a change order. The change order shall include an explanation in sufficient detail so that everyone involved will understand the need for the change. The explanation shall include a detailed justification of the cost associated with the change. All change orders must be numbered in sequence.

To be eligible for FHWA participation, all change orders must be approved by the Local Agency. No change order work shall be done prior to approval. In the case of emergency situations, verbal approval may suffice. Verbal approval must be followed by submission of the corresponding change order within ten calendar days.

When changes in the work will alter the termini, character, and scope of an approved project, approval of the Assistant Secretary for TransAid is required prior to the commencement of the physical work. Refer to Chapter 21, The Project Prospectus, for further information.

.51 Administrative Settlement Costs. Administrative settlement costs are costs related to the defense and settlement of contract claims including, but not limited to, salaries of contracting officers or their authorized representatives, attorneys or members of arbitration boards, appeal boards, etc., which are allocable to the findings and determination of contract claims, but not including administrative or overhead costs.

FHWA funds may participate in administrative settlement costs which are:

- Incurred after notice of claim.
- Properly supported.
- Directly allocable to a specific FHWA project.
- For employment of special counsel for review and defense of contract claims when recommended by the agency's legal counsel and approved in advance by WSDOT.

When a claim is submitted, the Regional TransAid Engineer should be contacted for advice on how to proceed.

52.6 Termination of Contract

Section 1-08.10 of the Standard Specifications, Termination of Contract, contains procedures and criteria for termination of a contract.

52.7 Compliance With Federal Contract Provisions

FHWA requires that all subcontracts at any tier be in writing, per 23 CFR, Section 635.116(b). This includes contracts between the prime contractor and their subcontractors, and contracts between subcontractors and their agents.

Each of these subcontracts also must physically contain the following documents, none of these documents can be included by reference only.

- The general special provision (GSP) entitled "Required Federal Aid Provisions,"
- Form FHWA 1273 "Required Contract Provisions Federal Aid Construction Contracts," and
- The minimum wage rates for the contract as required by RCW 39.12 and Title 29 of the Code of Federal Regulations.

It is the responsibility of the local agency to ensure full compliance with the provisions above.

Implementation of the DBE and EEO programs are also federal contract requirements. Refer to Chapter 26, Disadvantaged Business Enterprises, and Chapter 27, Equal Employment Opportunity and Training.

52.8 Physical Completion of Construction

The local agency will carry out the following requirements to terminate the construction contract and ready the project for acceptance by WSDOT and FHWA:

.81 Notice of Physical Completion. Within 10 calendar days after physical completion of the work by the contractor, the Local Agency Project Engineer shall notify the contractor by letter that the construction is physically complete, and the project is subject to inspection, audit, and acceptance by the state. The agency shall diligently pursue closure of the contract.

.82 Final Inspection. The Local Agency Project Engineer shall send a request for WSDOT inspection and acceptance to the Regional TransAid Engineer within 15 days of physical completion of work by the contractor. A copy of the physical completion letter that was sent to the contractor should accompany the request.

.83 Final Reports. A construction project is considered complete when the items listed below have been completed. All certifications and reports shall be retained for at least three years after final acceptance of the project.

a. Final Estimate (Approving Authority File). When the contractor has a claim pending against the local agency and wants to receive a final estimate, a claim must be submitted by letter detailing specific items and amounts. (When a claim is submitted, immediately contact the Regional TransAid Engineer so FHWA can be informed of the claim's details at an early stage. See Section 1-09.12(2) of the WSDOT/APWA *Standard Specifications*.)

b. Comparison of Preliminary and Final Quantities (Approving Authority File). A listing of items showing the preliminary and final quantities.

c. Certified Final Bill for Utility Agreement, if applicable, to Regional TransAid Engineer.

d. Final Records (Approving Authority File). The Local Agency Project Engineer must document the work performed on the contract. Documentation consists of field books, inspector's record of field tests, Project Engineer's and inspector's diaries, all invoices, weigh bills, truck measurements, quantity tickets, receiving reports, field office ledgers, mass diagrams, cross-sections, computer listings, and work profiles. Photographs or video tapes before, during, and after construction could be useful, especially if care is taken to show any unusual conditions, equipment, or procedures.

   Final records shall be retained by the local agency for at least three years following acceptance of the project by WSDOT TransAid. The local agency will receive from the Assistant Secretary for TransAid the administrative review letter showing the starting and ending date of the three-year retention period (OMB Circular A-128).

e. Record of Material Samples and Tests.

f. Materials Certification (Appendix 52.94). The intent of the materials certification is to assure that the quality of all materials incorporated into the project is in conformance with the plans and specifications and thus ensure a service life equivalent to the design life.

   This materials certification shall be completed in accordance with Section 9-1.5 of the *Construction Manual* or Chapter 52.3 of the *LAG* manual and is submitted along with the completion letter to the Regional TransAid Engineer.

g. Affidavit of Wages Paid. Upon completion of a contract, the prime contractor and every subcontractor or agent shall submit Form LI-700-7, "Affidavit of Wages Paid," to L&I for certification of the wage rates paid on the project. Each affidavit must be accompanied by the filing fee established by L&I.

   Local agencies are required to retain a percentage of money earned by the contractor according to the provisions of RCW 60.28.011. An L&I-certified copy

of Form LI-700-7 from the prime contractor and every subcontractor or agent must be on file with the local agency before the retained sum will be released.

h. Release for the Protection of Property Owner and General Contractor. Upon completion of the contract, Form LI-263-83, furnished by L&I, shall be properly executed by the prime contractor and submitted to L&I. When L&I, based on its records, has verified that the industrial insurance and medical-aid premiums have been paid by the prime contractor and every subcontractor, a statement to that effect will be issued by the L&I contract release clerk. A copy of this statement must be on file with the local agency before the retained percentage can be released.

i. WSDOT Form 140-542, "Affidavit of Amounts Paid DBE Participants," shall be submitted by the contractor to the local agency on all projects that contain DBE goals. This form should also be submitted when a qualified DBE contractor or subcontractor is employed on a project, regardless of whether that DBE is a condition of award or not. This form is submitted when the project is complete and accompanies the final estimate. (See Chapter 26, Disadvantaged Business Enterprises.)

.84 Project Acceptance. The approving authority's approval of the final estimate will be considered as the local agency's acceptance of the project.

52.9 Appendixes

52.91 Sample Preconstruction Conference Agenda

52.92 Sample Preconstruction Conference Minutes

52.93 Sample Letter Requesting WSDOT Project Inspection and Acceptance

52.94 Sample Materials Certification

52.95 Timeline for Construction Contracts

Forms

See Chapter 11 of the WSDOT *Construction Manual*.

LAG Form Weekly Statement of Working Days

LAG Form Change Order

3:LAG5

Sample Preconstruction Conference Agenda

I. ORDER OF WORK (Progress Schedule)

II. UTILITIES AND RAILROADS

A. Project Engineer prepare list of affected services and representative to be contacted.

B. Underground services should be located.

C. Notification time required by organizations.

D. Insurance required, if any.

III. SUBCONTRACTORS AND AGENTS

A. Request for approval must be submitted along with a Statement of Intent to Pay Prevailing Wage and Subcontractor or Agent Certification.

B. Nature of work to be performed by each.

C. Subcontractor's route correspondence via prime contractor.

D. Prime contractor must have a representative with authority on the job at all times (designated by letter).

E. DBE subcontract work — indepth discussion including conditions of award if any.

IV. RECORDS AND REPORTS

A. Description of required forms and initial supply should be handed out or mailed to prime contractor.

B. All reports must be handled through prime contractor's office.

C. Request for approval of sources of material should be submitted as soon as possible.

D. Falsework plans, if required.

E. Certified payrolls must be submitted on time and wage rate interviews will be conducted.

F. EEO and trainee requirements — indepth discussion.

G. DBE requirements when the contract contains DBE goals — indepth discussion.

H. Required job site posters (provided to Prime Contractor).

I. Davis-Bacon statement regarding the USDOL, WSDOT and local agency's role in investigations for labor compliance.

J. ADA requirements.

V. TRAFFIC CONTROL AND SAFETY

A. *Manual On Uniform Traffic Control Devices* will control signing.

B. Review and discussion of Traffic Control Plan (TCP).

C. Safety control on structures.

D. Flagman should use standard paddle and vest and must be certified with flagman card.

E. Speed regulation of construction equipment.

F. Contractor and project engineer designate by name the individual responsible for construction traffic control.

G. Safety and health requirements.

H. Request police to report all construction zone accidents to the contracting authority.

I. Gross legal load limits shall be adhered to.

J. The local agency will monitor the requirements of RCW 46.61.655 as amended by Substitute House Bill No. 1363 and cooperate with law enforcement agencies in the enforcement as provided in Section 1-07.1 of the Standard Specifications. Substitute House Bill No. 1363 deals with covered loads or 6 inches of freeboard.

VI. ENVIRONMENTAL CONSIDERATIONS

A. Commitment files.

B. Standard Specifications/Special Provisions.

C. Contractor responsibility to obtain permits.

D. Department of Ecology requires registration of rock crushers in accordance with WAC 173-400.

VII. DISMISS DISINTERESTED PARTIES (list those leaving)

VIII. REOPEN WITH GENERAL CONSTRUCTION DISCUSSION

A. Contractor explains how he plans to pursue the work.

B. Review of anticipated construction problems.

C. Conflict resolution — need for partnering.

4:P:LAG5

To: (Contractor)

Agency _____
Project Title _____
F.A. _____
Contract No. _____

Date:

Attention: (Contractor's Representative)

1. Time:
   Location of meeting:

2. Persons attending and organizations represented:

3. Description of work:

4. Discussion items:

Prepared by: _____

_____

cc: Regional TransAid Engineer
Each agency, organization, and firm who has involvement or interest in the project.

Sample Letter Requesting WSDOT Project Inspection and Acceptance

LOCAL AGENCY LETTERHEAD

Date

Regional TransAid Engineer
Department of Transportation

Contract No.
Contract Name
Federal Aid No.

Dear Sir:

For your information, I am sending you a copy of the contract completion letter that was sent to the contractor. I request inspection and acceptance of the project by WSDOT.

Very truly yours,

(Director of Public Works)
(County Engineer)
(City Engineer)
(Local Agency Engineer)

Project _____ Contract No. _____

Checklist for Project Certification

	Yes	No	
1.	_____	_____	Request for approval of material sources was submitted for all items listed on the record of materials and as required by Chapter 9-4 of the WSDOT *Construction Manual* or alternative procedures authorized by LAG 52.32.
2.	_____	_____	All preliminary samples requested by or for approval of source were submitted and approved or an alternate approval material or product was used.
3.	_____	_____	All samples and documentation including manufacturer's certificate of compliance, shop drawings, mill test certificates, etc., as required by the record of materials were submitted and subsequently approved.
4.	_____	_____	If job quantities differed by more than 10 percent from those listed on the record of materials, acceptance samples were taken at the frequency listed in Chapter 9-5.7 of the *Construction Manual* or alternative procedures authorized by LAG 52.32.
5.	_____	_____	All items requiring inspection at the point of fabrication were so inspected and were accepted at the jobsite by the presence of an approved stamp, sticker, tag, or mark.
6.	_____	_____	The results of the tests on acceptance samples indicate that the materials incorporated in the construction work, and the construction operations controlled by sampling and testing, were in conformity with the approved plans and specifications. Exceptions to the plans and specifications are explained on the back hereof (or on attached sheet).
7.	_____	_____	Items added by change order and not listed on the record of materials were accepted in accordance with procedures listed in Chapter 9 of the *Construction Manual* or alternative procedures authorized by LAG 52.32.

Note: Any "No" answers on this checklist must be fully explained and documented. Attach test reports representing nonspecification material as well as an explanation of the circumstances leading to acceptance of said material. All seven items must be completed before the project can be certified.

Certified
Signature _____ Date _____
(Approving Authority)

- Award Date 1-03 WSDOT
- Execution (WSDOT), Notice to Proceed (APWA)
- Begin Work 1-08.4 WSDOT

Working or Calendar Days set by Contract

• Substantial Completion	1-08.9 WSDOT 1-05.11(1) APWA
• Physical Completion	1-08.5 WSDOT 1-05.11(2) APWA
• Contract Completion	1-05.12 APWA
• Completion Date/Final Acceptance	1-08.5 WSDOT 1-05.12 APWA

See Prompt Pay Section 1-09.9

• Final Payment	1-09.9(4) APWA
• Retainage Release	1-09.9(2) APWA

Washington State Department of Transportation

WEEKLY STATEMENT OF WORKING DAYS

CONTRACTOR

ADDRESS (Street, City, State, ZIP Code)

CONTRACT NO.	FEDERAL AID PROJECT NO.	HIGHWAY NO. OR COUNTY	STATEMENT NO.	DATE

THE FOLLOWING STATEMENT SHOWS THE NUMBER OF WORKING DAYS CHARGED TO YOUR CONTRACT FOR THE WEEK ENDING

DATE	DAY	WEATHER CONDITION	WORKABLE DAYS	UNWORKABLE DAYS	REASON FOR UNWORKABLE DAYS
	Sunday				
	Monday				
	Tuesday				
	Wednesday				
	Thursday				
	Friday				
	Saturday				

DAYS THIS WEEK		
DAYS PREVIOUSLY REPORTED		
TOTAL DAYS TO DATE		

NOTE: ROUND ALL TIME TO THE NEAREST ½ DAY

CURRENT STATUS	
WORKING DAYS SPECIFIED IN CONTRACT	
*APPROVED EXTENSION OF TIME	
TOTAL AUTHORIZED TIME OF CONTRACT	
LESS WORKABLE DAYS CHARGED	
** WORKING DAYS REMAINING	

SUMMARY OF WEEK'S ACTIVITIES

* Indicate change order number or date of Headquarters letter granting time extension (show only on the first statement that the extension of time is reported)

** Use negative totals to show overrun in time

PROJECT ENGINEER

→ **NOTE:** The contractor will be allowed 10 days from date of this report in which to protest in writing the correctness of this statement, otherwise it shall be deemed to have been accepted as correct.

DOT FORM 422-032 (Revised 5-80) 1152

DISTRIBUTION WHITE—CONTRACTOR PINK—DISTRICT ENGINEER
CANARY—HQ CONSTRUCTION GOLDENROD—PROJECT ENGINEER

Washington State Department of Transportation

Change Order

Date:
Page of

Contract No:
Contract Title:
Change Order No:

Federal Aid No:

Prime Contractor:

( ) Ordered by Engineer under the terms of Section 1-04.4 of the Standard Specifications

( ) Change proposed by Contractor

Endorsed By:	Surety Consent:
Contractor	Attorney in Fact
Date	Date

Original Contract Amount:
Current Contract Amount:
Estimated Net Change This Order:
Estimated Contract Total After Change:

Approval Required: ( ) District ( ) Headquarters ( ) Local Agency

If the amount authorized in the Local Agency Agreement is exceeded and federal funds are not available for this change, the local agency will assume the total cost of this change order.

( ) Approval Recommended ( ) Approved Project Engineer Date	Approved: Approving Authority per C.A. Agreement Date
( ) Approval Recommended ( ) Approved By: Date	Other Approval When Required Signature Date Representing

DOT 140-005 LAG 140-479
Revised 5/94

53.1 General Discussion

After substantial completion of the work, the agency shall diligently pursue contract completion. In cases where the contractor is not diligently pursuing completion, the agency shall impose liquidating damages penalties, completion of remaining work with local forces or unilateral closure and claims against the contractor.

After the construction phase of a non-NHS FHWA transportation project, done either by competitive bidding or by local agency forces, specific procedures are carried out to terminate the project's finances and review project performance. These procedures are necessary in order to settle any outstanding contract obligations, and to ensure that funds were expended properly.

Chapter 53 lists requirements for closing the project accounts at WSDOT and FHWA and discusses project management reviews and project audits.

Consistent with criteria established for FHWA oversight, the following chart establishes responsibilities for preparation of project closing documents and actions for FHWA (F), WSDOT (S), and Local CA agencies (L):

	Local CA Agency non-NHS	Local non-CA Agency non-NHS
Documents		
a. Completion Letter	L	S/L
b. Material Certification	L	S/L
c. List of Change Orders	L	S/L
d. WSDOT Final Accep. Date	L	S/L
e. Comparison of Quantities	L	S/L
f. DOT 140-500	S	S
Actions		
a. Nonpart. Approval	S	S
b. Advance FMIS Steps	F	F
c. Final Voucher	S/F	S/F

(FMIS = Federal Management Information Systems)

53.2 Closure

After the construction contract is complete, a 90-day project closure period begins. During this period, the local agency must complete the requirements described below. No further payment will be made after the 90-day closure period without the approval of the Assistant Secretary for TransAid. The local agency may request, however, that the 90-day closure period be extended. In this case, the local agency shall submit a written request to the Assistant Secretary for TransAid justifying an extended closure period.

.21 Completion Letter. Within 15 calendar days of physical completion, the local agency shall submit a completion letter to the Regional TransAid Engineer.

.22 WSDOT Project Review. The Regional TransAid Engineer will conduct the final field inspection. It is suggested that the Regional TransAid Engineer be invited to the final project inspection with the contractor. If the final inspection reveals items that must be corrected or resolved before the project can be closed, these will be noted in the final inspection report. The Regional TransAid Engineer will work with the local agency to make the necessary corrections or to accomplish resolutions. If there is an unresolvable item indicating that a portion of project work is ineligible for FHWA reimbursement, WSDOT will issue a letter of notification outlining the ineligible work items and related costs.

.23 Final Billing. Within 90 calendar days of the completion date, the local agency shall submit the following documents to the Regional TransAid Engineer, clearly marked "Final Billing:"

a. The local agency's final billing on Form PPC2.

b. Written justification for billings exceeding the Local Agency Agreement amount. These require approval by the Assistant Secretary for TransAid.

Upon receipt of the final billing, WSDOT will pay the federal share or bill the local agency as appropriate.

.24 Project Approval. The Assistant Secretary for TransAid will inform the local agency when FHWA has approved the Final Voucher and will explain what records must be retained and for how long.

53.3 Project Management Review

In order to be reasonably certain that local agencies are administering FHWA funds in accordance with the *Local Agency Guidelines*, the TransAid Operations Engineer will conduct project management reviews annually on selected local agency ad-and-award projects. These reviews will cover:

- General procedural compliance items noted in OMB Circular A-128.
- Procedures in the *Local Agency Guidelines*.
- Items of special interest developed from State Auditor's reports, recommendations from FHWA, and previous process reviews.
- Compliance with "Equal Employment Opportunity" and "Disadvantaged Business Enterprise" programs.

.31 Preparation. The Assistant Secretary for TransAid, through the Regional TransAid Engineer, will schedule management reviews with the designated agencies and will request that the local agency managers participate. The local agency should have all pertinent documentation ready for the scheduled review. Typical procedural review questions are listed in Appendix 53.51. Typical documents to be examined during this review are also listed in Appendix 53.51. All deficiencies will be identified for the agency at the Project Management Review (PMR). Copies of documentation not available at the time of review shall be submitted through the Regional TransAid Engineer within 21 days. After the 21-day period, the final PMR letter will be sent to the agency.

.32 Deficiencies. If no major deficiencies are found in the local agency's project management methods, the local agency will be informed in writing of the review team's findings and recommendations.

If major deficiencies exist, the local agency will be asked to take corrective action within 60 days. If the deficiencies include ineligible work, WSDOT will issue a citation letter.

If deficiencies exist in the agency's procedures, management practices, or systems, or if specific project errors are found, WSDOT's administrative response might be one or more of the following:

- No action against the agency.
- Joint conference with the Local Agency, Regional TransAid Engineer, and the Assistant Secretary of TransAid or his designee.
- Limit or withhold the agency's future Certification Acceptance authority (Chapter 13) to the extent deemed necessary:

a. Allow Certification on a project-by-project basis.

b. Direct WSDOT to assign a Project Engineer to each project for supervision, inspection, and administration.

c. Contract the supervision, inspection, and administration to a consulting firm.

d. Delay project authorization until adequate supervision, inspection, and administration is available from the local agency, WSDOT, or consultants.

- Establish a repayment plan when violations to procedures make certain expenditures ineligible for federal reimbursement. Per Section VII of the Local Agency agreement, withholding of funds from the local agency's gasoline tax distribution may be necessary if a satisfactory repayment plan is not established within 45 days.

53.4 Financial and Compliance Audit

.41 By the State Auditor. The local agency is responsible for ensuring that an audit is performed in accordance with OMB Circular A-128. WSDOT is also responsible for ensuring that FHWA funds are properly expended. The State Auditor will therefore audit each local agency.

.42 By WSDOT. A project audit by WSDOT Auditors is triggered by deficiencies found during:

a. A routine audit by the State Auditor, either on an FHWA project or on any other project where federal funds are involved.

b. A project management review.

.43 Project Records. Project records shall be maintained in accordance with the terms of the Local Agency Agreement and shall be made available to the audit personnel upon request. It is helpful if field notes and other documentation are available in sufficient detail to facilitate the audit review.

.44 Audit Report. The state auditor will submit a formal audit report to the Assistant Secretary for TransAid and to FHWA. If findings on a particular audit arise, TransAid will contact the agency to confirm the findings and coordinate resolution with the agency and TransAid. Audit findings must be resolved within six months of the date that the audit report is issued. Audits will normally include the following categories:

- Interagency Agreements
- Land Development or Land Acquisition Projects
- Tier Contracting Procedures
- Fund Management — Transactions
- Accounting Methods — Cash or Accrual
- DBE-EEO Practices
- Use of Grant Acquired Equipment

53.5 Appendixes

53.51 Local Agency Documentation Review Checklist

53.52 Enhancement Project Checklist

Forms

WSDOT Form 140-500 Final Inspection of Federal Aid Project

10:LAG5

Agency: _____ Date: _____
Project Title: _____
Federal Aid Project No.: _____ Contract No.: _____
Reviewers: _____
_____
_____

Table of Organization and CA Agreement Review:

Action	Approving Authority
Design Approval	_____
PS&E Approval	_____
Tied Bids	_____
Contract Award	_____
Change Orders	_____

Preliminary Engineering:

Design Approved By: _____ Date: _____
PS&E Approved By: _____ Date: _____
Agency Supplied Materials Approved By:
Sole Source Items? Yes _____ No _____
If Yes, FHWA Approval Date: _____
Changes in Scope, Limits, Character, Cost? Yes _____ No _____
If Yes, FHWA Approval Date: _____
Tied Bids Approved By: _____ Date: _____

Advertising and Award:

FHWA Construction Authorization Date: _____
Advertising Dates: _____
Three Week Advertising Period? Yes _____ No _____
Affidavits of Publication in File? Yes _____ No _____
Bid Opening Date: _____
Award Date: _____
Award to Lowest Bidder? Yes _____ No _____
If Not, Explain: _____
Contract Execution Date: _____
Contract Award Amount: $_____
Award Information Transmitted to WSDOT? Yes _____ No _____
First Working Day: _____ No. of Working Days: _____
No. of Working Days Complete: _____
Preconstruction Conference Minutes Review:
Comments: _____
_____
_____

Minutes Sent To:			
	Regional TransAid Engineer?	Yes _____	No _____
	Contractor?	Yes _____	No _____
	All Invitees?	Yes _____	No _____

Commitment File (DOT Form 220-021 or equal):

Environmental and Permit Conditions Met Yes _____ No _____
Right-of-Way Commitments to Landowner Met Yes _____ No _____
Maintenance Obligations Identified Yes _____ No _____

Construction Contract Administration:

Approval of Subcontractors:

Subcontractor	Amount ($)	Approval Date	DBE/WBE?

Specialty Items Subbed: _____ Amount: $_____

Percent of Contract Subbed: _____%
Allowable = (Contract Amount Specialty Items) 0.70 = _____

Change Orders:

No.	Verbal Approval Date	Written Approval Date	Comments	Documented

Claims by Contractor? Yes _____ No _____
Comments: _____
_____

Project Diaries and Inspector's Daily Reports Signed and Up to Date? Yes _____ No _____

Payrolls:

Wage Rates Included in Contract? Yes _____ No _____
Payrolls on File? Yes _____ No _____
Certified by Contractor? Yes _____ No _____
Checked and Initialed by Agency? Yes _____ No _____

Prime/Subs	Wage Rate Interview	Intent to Pay Wages	Affidavit Wages Paid

Any L&I Violations on Contract? Yes _____ No _____
If Yes, How Resolved? _____

EEO Compliance:

Right-of-Way Yes _____ No _____
Consultant Yes _____ No _____
Hearings Yes _____ No _____
Monthly Utilization Reports (CC 257) on File for Prime and Subs (Greater Than $10,000) Yes _____ No _____
PR-1391 on File and Sent to Regional TransAid? Yes _____ No _____
Comments: _____

Training:

Training Goal Set? Yes _____ No _____ Hours _____
Training Plan Approved by Agency: Yes _____ No _____
Training Goal Met? Yes _____ No _____ Hours _____
Comments: _____

DBE Compliance:

DBE Goal Set: $_____
DBE Condition of Award Amount: $_____
How Was DBE Certification Verified Prior to Award? _____

DBE On-Site Review Conducted for Each Sub? Yes _____ No _____
Change Orders Affects on DBEs: Yes _____ No _____
Additional Work Provided to DBEs? Yes _____ No _____
Any Changes to DBE Goals? Yes _____ No _____
Approved by TransAid Engineer? Yes _____ No _____
Affidavit of Amounts Paid to DBEs Sent to Regional TransAid Engineer? Yes _____ No _____

Bridge Construction Projects:

Bridge Rail Crash Tested Design Used? Yes _____ No _____
(New Construction Only, Any Funding Program)

Contract Completion:

Completion Date: _____
Completion Letter to Contractor Date: _____
End of Project Materials Certification From Project Engineer to Approving Authority Date: _____

Local Agency Documentation Enhancement Project Review Checklist

Agency: _____ Date: _____
Project Title: _____
Federal Aid Project No.: _____ Contract No.: _____
Reviewers: _____
_____
_____

Project Administration Responsibility:

Preliminary Engineering:

Consultant Selection: _____ Date: _____
Standard Agreement Used? Yes _____ No _____
If Not, TransAid Approval Date: _____
Design Approved By: _____ Date: _____
PS&E Approved By: _____ Date: _____
Agency Supplied Materials Approved By:
Sole Source Items? Yes _____ No _____
Changes in Scope, Limits, Character, Cost? Yes _____ No _____
If Yes, TransAid Approval Date: _____
Tied Bids Approved By: _____ Date: _____
Minimum Contents of Bid Package Included? Yes _____ No _____
Standard Specifications used? Yes _____ No _____
If Not, Explain: _____

Advertising and Award:

FHWA Construction Authorization Date: _____
Advertising Dates: _____
Three Week Advertising Period? Yes _____ No _____
Affidavits of Publication in File? Yes _____ No _____
Bid Opening Date: _____
Award Date: _____
Award to Lowest Bidder? Yes _____ No _____
If Not, Explain: _____
Contract Execution Date: _____
Contract Award Amount: $_____
Award Information Transmitted to WSDOT? Yes _____ No _____
First Working Day: _____ No. of Working Days: _____
No. of Working Days Complete: _____
Environmental and Permits Conditions Met? Yes _____ No _____
Right of Way Certified/Commitments to Landowner Met? Yes _____ No _____

Construction Contract Administration:

Approval of Subcontractors:

Subcontractor	Amount ($)	Approval Date	DBE/WBE?

Percent of Contract Subbed: _____%
Allowable = (Contract Amount — Specialty Items) 0.70 = _____

Change Orders:

No.	Verbal Approval Date	Written Approval Date	Comments	Documented

Claims by Contractor? Yes _____ No _____
Comments: _____

Project Diaries and Inspector's Daily Reports Signed and Up to Date? Yes _____ No _____

Payrolls:

Wage Rates Included in Contract? Yes _____ No _____

Prime/Subs	Wage Rate Interview	Intent to Pay Wages	Affidavit Wages Paid

Building Permit Required for Project? Yes _____ No _____
If Yes, Building Permit Issue Date: _____

Any L&I Violations on Contract? Yes _____ No _____
If Yes, How Resolved? _____

EEO Compliance:

Monthly Utilization Reports (CC 257) on File
for Prime and Subs (Greater Than $10,000) Yes _____ No _____
PR-1391 on File and Sent to TransAid? Yes _____ No _____
Comments: _____

Training:

Training Goal Set? Yes _____ No _____ Hours _____
Training Plan Approved by Agency: Yes _____ No _____
Training Goal Met? Yes _____ No _____ Hours _____
Comments: _____

DBE Compliance:

DBE Goal Set: $_____

DBE Condition of Award Amount: $_____

How Was DBE Certification Verified Prior to Award? _____

_____

DBE On-Site Review Conducted for Each Sub?	Yes _____	No _____
Change Orders — Affects on DBEs:	Yes _____	No _____
Additional Work Provided to DBEs?	Yes _____	No _____
Any Changes to DBE Goals?	Yes _____	No _____
Approved by TransAid Engineer?	Yes _____	No _____
Affidavit of Amounts Paid to DBEs Sent to TransAid Engineer?	Yes _____	No _____

Comments: _____

_____

_____

Contract Completion:

Completion Date: _____

Completion Letter to Contractor Date: _____

Non-CA or Building Department Certification of Completed Work in Accordance With Project Plans and Specifications Date: _____

13:P:LAG5

Washington State
Department of Transportation

Final Inspection of Federal Aid Project

Constructed Under 23 U.S.C. 117

PROJECT TITLE					
FEDERAL AID NO.			CONTRACT NO.	AGENCY	
DESCRIPTION OF WORK					
CONTRACTOR'S NAME			CONTRACT AWARD AMOUNT $	FINAL CONTRACT COST (DO NOT INCLUDE CONSTRUCTION ENGINEERING) $	
% SUBLET	TRAINING CONTRACT HOURS	TOTAL HOURS PAID	DBE CONTRACT GOAL $	DBE CONDITION OF AWARD AMOUNT $	DBE AFFADAVIT OF AMOUNT PAID $
DATE OF INSPECTION	INSPECTION MADE BY				
IN COMPANY WITH					
REMARKS					

Comments

Marking and signing in conformance with contract plans? _____

Roadside obstacles? _____

Materials certified by agency? _____

Claims? _____

Change Orders? _____

Completed in accordance with specified working days? _____

Other? _____

☐ This project has been completed in substantial conformance with the project prospectus and contract plans.

☐ This project has the following deficiencies which must be corrected prior to final acceptance:

SIGNATURE OF TRANSAID ENGINEER	DATE

DOT Form 140-500
Revised 8/95

Contents

GUIDELINE SECTIONS

Guidelines Overview

- 11 Introduction
- 12 FHWA Funding Programs
- 13 Becoming Certified to Administer FHWA Projects
- 14 Developing Projects Using the Local Agency Guidelines

General Project Development
(Applicable to All Projects)

- 21 The Project Prospectus
- 22 The Local Agency Agreement
- 23 Progress Billings
- 24 Environmental Processes
- 25 Right-of-Way Procedures
- 26 Disadvantaged Business Enterprises
- 27 Equal Employment Opportunity and Training

Special Project Development
(Applicable to Some Projects)

- 31 Using Consultants
- 32 Railroad/Highway Crossing Program
- 33 Emergency Relief Program
- 34 Bridge Selection and Scoping

Design

- 41 General
- 42 Design Standards
- 43 Location and Design Approval
- 44 Plans, Specifications, and Estimates
- 45 State Advertising and Award Procedures
- 46 Local Advertising and Award Procedures

Construction and Post-Construction

- 51 WSDOT Administered Projects
- 52 Local Administered Projects
- 53 Project Closure

Miscellaneous

- 61 Local Agency Force Projects
- 62 Enhancement Projects
- 63 NHS Projects
- 64 Bridge Inspectiond
- 65 Management Systems

List of Forms

Acronyms/Glossary of Terms

Index

June 1997

61.1 General Discussion

Congress determined that competitive bidding is the preferred method of performing projects. Therefore, local agencies using their own forces to construct Federal Highway Administration (FHWA) projects must demonstrate that this is the most cost-effective method. Only local agencies operating under CA may administer an FHWA project using agency forces. It is the responsibility of the agency to ensure that the agency-force work is within its day labor statutory limits for construction costs (refer to RCW 36.77 and 35.77).

Projects may be designed and constructed by one local agency on behalf of another when approved by the Washington State Department of Transportation (WSDOT).

This chapter addresses the differences between Local Ad and Award, local administered projects by contract and bidders, Chapters 46 and 52, and construction performed by the Local Agency forces.

The development of a project for construction by local agency forces follows the same procedures as for a competitive bid contract as defined in Chapters 43 and 44 through the right-of-way acquisition process (Chapter 25).

61.2 PS&E Requirements

The requirements of Chapter 44, will apply to the design and development of these projects.

61.3 PS&E Approval

The PS&E must be approved as described in Chapter 44.

61.4 Fund Authorization

A supplement to the Local Agency Agreement (Chapter 22) must be submitted to the Regional TransAid Engineer requesting authorization of construction funds.

61.5 Contract Number

Construction work by local forces shall not start until a TransAid contract number has been obtained from the Regional TransAid Engineer.

61.6 Construction Administration

.61 General Discussion. FHWA and the Washington State Department of Transportation (WSDOT) are responsible for the proper expenditure of FHWA funds on local agency projects. In this capacity, Olympia Service Center and Regional TransAid Personnel will consult and work with local agencies as needed and will perform systematic project management reviews to ensure that proper procedures are followed.

General guidelines for construction will be administered in accordance with the *Local Agency Guidelines* (LAG) Chapter 52. Materials will be inspected in accordance with the WSDOT *Construction Manual* and LAG Chapter 52. (In case of conflicting guidelines, Chapter 52 governs over the *Construction Manual*.)

.62 Preconstruction Conference. Refer to Chapter 52.

.63 Quality Control. The quality of materials and workmanship on the project must conform to the project specifications so that the public funds expended will have purchased a safe, economical, and fully functional transportation facility. Refer to Chapter 52.

.64 Progress Billing. Progress billing must be based on all work performed. Costs of the labor, equipment, and material must be documented, as described in Chapter 23.

.65 Changes and Extra Work. An agency should have a written policy for the approval of change orders to ensure that approval, either verbal or written, is given and documented prior to beginning work.

Whenever a change in the project work is required, the Local Agency shall prepare a change order and submit it to the approving authority for approval. This procedure is described in Chapter 52.

.66 Completion of Construction. The local agency will carry out the following requirements to ready the project for acceptance by WSDOT:

- Final Inspection — within 15 calendar days after completion of the work by agency forces, the Local Agency Project Engineer shall notify the Regional TransAid Engineer with a request for final inspection and acceptance. Refer to Chapter 52.
- Final Reports — a construction project is complete when the items listed below are submitted by the Local Agency to the Regional TransAid Engineer or the approving authority.

  a. Final Billing (approving authority file).

  b. Comparison of Preliminary and Final Costs (approving authority file). A listing showing the preliminary and final costs of the labor, equipment, and material.

  c. Final Records (approving authority file). The Local Agency Project Engineer must document the work performed on the project. Documentation consists of any field books, inspector's record of field tests, project engineer's and inspector's

diaries, all invoices, weigh bills, truck measurements, quantity tickets, receiving reports, field office ledgers, mass diagrams, cross-sections, computer listings, work profiles, approved time slips, etc., when they are a basis of payment for work performed or material furnished. Photographs or video before, during, and after construction could be useful, especially if care is taken to show any unusual conditions, equipment, or procedures.

Final records shall be retained as specified in Chapter 53.

d. Record of Material Samples and Tests. Records of samples and tests will be retained by the local agency for at least three years following acceptance of the project by the Assistant Secretary for TransAid.

e. Materials Certification (Chapter 52). The intent of the material certification is to assure that the quality of all materials incorporated into the project is in conformance with the plans and specifications and thus ensures a service life equivalent to the design life.

This material certification shall be completed in accordance with Sections 9-1.5C and 9-5.4 of the *Construction Manual*, and the sample in LAG Chapter 52.

This certification shall be retained by the local agency as specified in Chapter 53.

61.7 Project By One Agency for Another Agency

WSDOT approval is required whenever one local agency uses its forces to perform construction work for another agency. The request for approval shall include the following information:

.71 Kinds of work to be performed.

.72 Two cost estimates or other types of justifications; one for contracted work, and one for work by agency forces.

.73 Reason(s) why the work to be performed by agency forces is considered cost-effective.

The cost estimate for the competitive bidding work may be based on unit prices, including any related engineering and administrative costs necessary to prepare, monitor, and close the project. The unit prices shall be based on competitive bidding on comparable construction work in the same general locality.

The requesting agency shall submit the request to the Regional TransAid Engineer.

The Project Development Checklist should be used to guide these projects.

61.8 Appendixes

61.81 Sample Local Agency Force Preconstruction Conference

2:LAG6

(Sample Agenda Outline)

I. Order of Work

II. Utilities and Railroads

a. Local Agency project engineer prepare list of affected services and representative to be contacted.

b. Underground service should be located.

c. Notification time required by organizations.

d. Insurance required, if any.

III. Traffic Control and Safety

a. Uniform Traffic Control Devices Manual will control signing.

b. Review and discussion of traffic control plan (TCP).

c. Safety control on structures.

d. Flagman should use standard paddle and vest and must be certified with flagman card.

e. Speed regulation of construction equipment.

f. Local Agency project engineer designate by name the individual responsible for construction traffic control.

g. Safety and health requirements.

h. Request police to report all construction zone accidents to the Local Agency engineer.

IV. Environmental Considerations

a. Commitment files.

b. Standard Specifications/Special Provisions.

V. General Construction Discussion

a. Local Agency engineer explains how he plans to pursue the work.

b. Review of anticipated construction problems.

3:P:LAG6

62.1 General Discussion

ISTEA requires that a nominal 10 percent of a portion of the Surface Transportation Program (STP) funds be set aside for transportation enhancements. An Enhancement Advisory Committee (EAC) has developed statewide selection criteria for projects funded by statewide or regional STP funds. Refer to Chapter 12.

Enhancements encompass a broad range of activities and are defined as follows:

- Provision of facilities for pedestrians and bicycles.
- Acquisition of scenic easements and scenic or historic sites.
- Scenic or historic highway programs.
- Landscaping and other scenic beautification.
- Historic preservation, rehabilitation, and operation of historic transportation buildings, structures, or facilities (including historic railroad facilities and canals).
- Preservation of abandoned railway corridors (including their conversion and use for pedestrian or bicycle trails).
- Control and removal of outdoor advertising.
- Archaeological planning and research.
- Mitigation of water pollution due to highway runoff.

62.2 Standards

Because of the variety of project categories allowed under this fund, the Washington State Department of Transportation (WSDOT) and the Federal Highway Administration (FHWA) have delegated to local agencies awarded enhancement projects the authority to design and construct them using the standards shown in Appendix 62.51.

62.3 Special Requirements

Project design and construction may also be performed by modified CA agencies following these guidelines.

.31 The bid documents must be approved by a full CA agency or the Regional TransAid Engineer, prior to advertisement.

.32 All agencies with less than full CA status must supply a Certification Statement that the work has been completed in accordance with the project application, plans, specifications, and all applicable state and local codes, public work contracting requirements, and laws.

.33 All agencies without full CA status must have written approval of change orders from full CA agencies or from the Regional TransAid Engineer prior to performing the work.

.34 For projects that involve procurement and installation, refer to:

RCW 36.32 — Counties
RCW 35.23 — Cities
RCW 39.04 — Municipalities

The WSDOT/APWA standard specifications should be used whenever possible. Division 1 or 1-99 of those specifications are recommended for complying with federal and state laws and regulations.

All design standard specifications, right-of-way, and construction documents must be developed under the supervision of a licensed professional engineer, architect, or land surveyor and must be stamped with a professional seal. The plans and the cover of the specifications also require a professional seal along with any changes to the approved design.

Relationships and agreements for performing joint work need to contain a clear understanding of the responsibilities and the scope of work.

62.4 Minimum Contents of Bid Package

- Cover-Project name, project engineer's name (P.E. stamped)
- Notice to Planholders (Chapter 44)
- Vicinity Map
- Special Provisions (with professional seal)
- Federal Aid Provisions and Amendments (Chapter 44)
- Wage Rates
- Bid Proposal
- DBE Goal Notice (if goal is assigned) (Chapter 26)
- Proposal Bond
- Noncollusion Affidavit
- Lobbying Certificate
- DBE Certification (if goal is assigned) (Chapter 26)
- Proposal Signature Sheet
- Plans With a Professional Seal
- Traffic Control Plans When Appropriate (Use MUTCD)
- Davis-Bacon Documents — wage requirements (Chapter 44)

62.5 Appendixes

62.51 Enhancement Standards

4:P:LAG6

Minimum Standards for Enhancement Projects

Work Type	Funding	① Design	Environ-mental	Civil Rights	Right of Way	① Plans Specs and Estimates	Bid Procedures	② ③ ④ Construction Contract Administration	Final Inspection Project Revenue
Bicycle, Pedestrian Paths, and Lanes	See *LAG Manual* Chapters 14, 21, 22, and 23	WSDOT *Design Manual* per RCW 35.75.06 and 36.75.24	See *LAG Manual* Chapter 24	See *LAG Manual* Chapters 26 and 27	See *LAG Manual* Chapter 25	See *LAG Manual* Chapter 44 or as approved by the Regional TransAid Engineer	See *LAG Manual* Chapters 43 and 46 and RCW 39.04 Small Works Bidding	② All agencies must supply a certifying statement	See *LAG Manual* Chapter 53 (Revised June 5, 1992 by FHWA)
Landscaping and Irrigation Sec. 1320 *Design Manual*		WSDOT *Design Manual* Chapters 13.20 and 13.30						② → WSDOT/APWA *Standard Specifications*, WSDOT *Construction Manual*, *LAG Manual*; Chapter 52	
Public Roads and Dual Use Bicycle/ Pedestrian Lanes		*LAG Manual* Chapter 41						Per Uniform Building Codes (permit requirements, inspections, materials, etc.)	
③ Bicycle Facilities (Lockers, Racks, etc.)		Per Agency Adopted Standards						→	
Structures		WAC 51-11 to 30 RCW 19.27 State Building Codes							
③ Bus Shelters		Per Agency Adopted Standards and 49 CFR 37 APP A							
Historic Preservation		U.S. Dept. Interior Stds. for Rehabilitation Contact: SHPO 753-7436							
Buildings/Utilities		WAC 51-11 to 30 RCW 19.27 State Building Codes							

Notes

① Bid documents must be approved by a full CA agency or the Regional TransAid Engineer.

② All agencies must supply a Certification Statement that the work has been completed in accordance with the project application, plans, specifications, and all applicable state and local codes, public work contracting requirements, and laws.

③ For projects that involve procurement and installation, refer to: RCW 36.32 — Counties, RCW 35.23 — Cities, and RCW 39.04 — Municipalities.

④ All agencies with less than full CA status must have written approval of change orders from the Regional TransAid Engineer or a full CA agency prior to performing the work.

DLM/GRB 2-19-93

2:TA9

5:P:LAG6

63.1 General Discussion

This chapter addresses criteria to be used on projects on the National Highway System (NHS) routes. The ISTEA of 1991 established a major new federal aid system, the NHS. According to the Federal Highway Administration (FHWA), the NHS "is the centerpiece of the newly structured federal aid highway program." The Secretary of Transportation of USDOT is directed by Congress to develop the NHS in cooperation with the states and local areas. The NHS will include the interstate system; other routes identified for their strategic defense characteristics; routes providing access to major ports, airports, public transportation, and intermodal transportation facilities; and principal arterials that provide regional service.

The proposed NHS has been developed by the Washington State Department of Transportation (WSDOT) Planning and Programming Service Center in cooperation with local and regional officials based on guidelines established by the U.S. Secretary of Transportation and on the functional reclassification (see Section 12.36). The proposed NHS resulting from this cooperative designation process has been submitted to FHWA and is being considered by the U.S. Congress.

Congress is to take action on approving the system by September 30, 1995. Until then, the NHS in Washington will include all streets and highways submitted to FHWA. The proposed NHS system in Washington has about 5 360 km (3,323 miles).

Although a part of the NHS, the Interstate System retains its separate identity and receives separate funding. The local agency mileage on this proposed NHS system, by agency, is listed in Appendix 63.71.

63.2 Types of Eligible Projects

These include construction, rehabilitation, resurfacing, restoration, and operational improvements for highways, highway safety improvements, highway related technology transfer activities, and carpool and vanpool projects.

63.3 Standards

Design and construction standards for all new construction or reconstruction projects and for all 3R multi-lane limited access projects on the NHS shall meet or exceed AASHTO standards in accordance with Title 23 USC, Section 109(b) and Section 109(c). For other projects on the NHS, the currently approved standards stipulated in the WSDOT Design, Construction, and LAG manuals, as applicable or subsequent approved revisions will be met.

For 3R NHS projects, on other than multi-lane limited access facilities, regardless of funding, the minimum design standards will be Section 430 WSDOT *Design Manual* (M 22-01) Standards or approved revisions.

These standards are applicable for both WSDOT administered and local agency administered (through WSDOT) projects. FHWA will be notified promptly of all policy changes in these manuals, laws, regulations, or directives affecting FHWA projects.

63.4 NHS Certification Acceptance

All local agency NHS projects will be administered under Certification Acceptance (CA) procedures, regardless of federal funding source, except for certain high cost or unique bridge projects.

63.5 Project Approval Actions

In accordance with the Stewardship Agreement, the oversight option which applies to Federal-aid highway projects on local agency routes is 23 SC 117 Certification Acceptance procedures (NHS off the Interstate system and Non-NHS projects). For these procedures, the following chart establishes the contract administration and oversight responsibilities for the FHWA (F), the WSDOT (S), and Local CA Agencies (L):

	Local CA NHS
Construction Fund Auth.	F
Changes/Extra Work/ Non-participation	L
Claims	L
Project Inspections	L
Final Inspection	S
Final Acceptance	S
PR/PE	F

Title 23 USC and 23 CFR provisions apply to all NHS Federal aid projects regardless of federal funding source or approval authority. State standards may be used on non-NHS projects, except for federal requirements pertaining to contracts (bid proposal content including Davis Bacon and DBE) and procurement procedures (competitive bidding and Brooks Act).

63.6 NHS Components

About 160 km (100 miles) of the proposed NHS are not under WSDOT jurisdiction. Of these local agency routes, 51 km (32 miles) are major STRAHNET connectors, 37 km (23 miles) are principal arterial routes, and 72 km (45 miles) are connectors to ports and airports.

Although the state has not included any future routes on their proposed NHS, certain routes will be advanced for the NHS later. These projects would be either extensions or realignments of existing NHS routes.

63.7 Appendixes

63.71 List of Local Agency NHS Routes

63.72 Local Agency NHS Route Terminii

6:P:LAG4

STP Distribution Attributable to the Proposed NHS System

Local Jurisdiction by MPO/RTPO	Approximate NHS Km	Approximate NHS Miles	%NHS	Lead Agency
Clallam County	1.37	0.85	0.86	
Richland	5.15	3.20	3.25	
Pasco	0.93	0.58	0.59	BFRC
Douglas County	6.45	4.00	4.07	
East Wenatchee	0.34	0.21	0.21	Douglas County
King County	3.52	2.18	2.21	
Renton	4.87	3.02	3.07	
Seatac	3.79	2.35	2.39	
Seattle	53.02	32.87	33.41	
Tukwilla	3.19	1.98	2.01	
Port of Seattle	2.02	1.25	1.27	
Kitsap County	16.86	10.45	10.62	
Port Orchard	1.18	0.73	0.74	
Pierce County	2.15	1.33	1.35	
Fife	0.20	0.12	0.12	
Tacoma	1.83	1.13	1.15	
Snohomish County	5.25	3.25	3.31	
Everett	2.02	1.25	1.27	PSRC
Spokane County	6.99	4.33	4.40	
Spokane	0.34	0.21	0.21	SRTC
Whitman County	4.49	2.78	2.83	
Pullman	0.71	0.44	0.45	Whitman County
Thurston County	1.57	0.97	0.99	
Lacey	7.54	4.67	4.75	
Olympia	1.71	1.06	1.08	
Tumwater	4.04	2.50	2.54	TRPC
Walla Walla Port	1.17	0.72	0.73	Walla Walla County
Whatcom County	0.42	0.26	0.26	
Bellingham	7.91	4.90	4.98	WCCOG
Yakima County	2.89	1.79	1.82	
Union Gap	0.94	0.58	0.59	
Yakima	3.92	2.43	2.47	YVCOG
Total	**158.78**	**98.39**	**100.00%**	

7:P:LAG6

Agency Name	Function	Route Name	Start Location	Ending Location
Bellingham	Alaskan Ferry	12th Street	Donovan Avenue	Harris Avenue
Bellingham	Alaskan Ferry	Harris	12th	Alaskan Ferry
Bellingham	Port of Bellingham	Meridian Street	I-5	Orchard Drive
Bellingham	Port of Bellingham	Squallicum Way	Meridian Street	Roeder-RR
Bellingham	Port of Bellingham	Roeder Avenue	RR Underpass	Bay Street
Bellingham	Port of Bellingham	Chestnut Street	Bay Street	Cornwall Street
Bellingham	Port of Bellingham	Cornwall Avenue	Holly Street	Wharf Street
Clallam County	Port Angeles Airport	Airport Road	SR 101	Edgewood Drive
Clallam County	Port Angeles Airport	Edgewood Drive	MP 3.08	MP 3.35
Douglas County	Wenatchee Airport	Grant Road	E Wen E C/L	Wenatchee Airport
East Wenatchee	Wenatchee Airport	Grant Road	State Highway 28	East C/L
Everett	Boeing Access	Seaway Boulevard	John Fluke Drive	Merrill Creek Drive
Everett	Paine Field	Airport Road	South C/L	SR 526
Fife	Strahnet Port of Tacoma	Port of Tacoma Road	I-5	North C/L
King County	Rainier Avenue South	Rainer Avenue South	Renton C/L	Seattle C/L
King County	North Truck Access	Westminister Way	N 145 Street	North 157 Street
Kitsap County	Strahnet Navy Fuel	Beach Drive	Port Orchard C/L	Navy Fuel Depot
Kitsap County	Strahnet Bangor Access	Clear Creek Road	Kitsap Mall	Bangor Gate 10
Lacey	Amtrack Station	Martin Way NE	I-5	College Street
Lacey	Amtrack Station	College Street SE	Martin Way North	Yelm Highway
Lacey	Amtrack Station	Yelm Highway	College Street	Ruddell Road
Olympia	Port of Olympia	Henderson Boulevard	I-5	Union Avenue
Olympia	Port of Olympia	Plum Street	Union Avenue	State Avenue
Other Benton	Hanford Access	Stevens Drive (DOE)	Spengler Road	Horn Rapid Road
Pasco	Pasco Airport	20th Avenue	I-182	Argent Road
Pierce County	Strahnet South Mcchord	Bridgeport Way SW	Mcchord Drive South	I-5
Pierce County	Strahnet North Mcchord	112th Street South	Mcchord AFB	South Tacoma Way
Pierce County	Strahnet North Mcchord	S Tacoma Way	112th Street South	SR 512
Pierce County	Strahnet Port of Tacoma	E Port of Tacoma Road	Tacoma: To North	Fife: Pacific
Port of Seattle	North Access Seatac Airport	Airport Freeway	SR 518	Seatac Airport
Port Orchard	Strahnet Navy Fuel	SR 166	P.O. C/L	East Corp Lm
Pullman	Pullman Airport	Airport Road	Main Street (SR 270)	Ua Bndy
Renton	Boeing Renton Plant	Airport Way	Rainier Avenue North	Logan Avnue South
Renton	Boeing Renton Plant	Logan Avenue North	Airport Way	N 6th Street
Renton	Boeing Renton Plant	N 6th Street	Logan Avenue North	Park Avenue North
Renton	Boeing Renton Plant	N Park Street	N 6th Street	I 405
Renton	Rainier Avenue South	Rainer Avenue South	S 2nd Street	Renton C/L
Richland	Hanford Access	Stevens Drive	Jadwin Avenue	Spengler Road
Seatac	South Access Seatac Airport	12th Place S/S 188th Street	I-5	SR 509
Seattle	West Seattle Freeway	West Seattle Freeway	South Columbian Way	Alaskan Rps
Seattle	Boeing Field Access	E Marginal Way South	South C/L	1 Avenue South Bridge
Seattle	Railroad Access	S Hanford Street	E Marginal Way South	1 Avenue South
Seattle	Rainer Avenue South	Rainier Avenue South	Seattle C/L	I-90
Seattle	North Truck Access	Elliott Avenue	Elliott On RP	Denny Way
Seattle	North Truck Access	Western Avenue	Bell Street	Denny Way
Seattle	North Truck Access	Elliott Avenue West	W Denny Way	Mercer Place

Agency Name	Function	Route Name	Start Location	Ending Location
Seattle	North Truck Access	15 Avenue West	W Galer Street	West Emerson Street
Seattle	North Truck Access	15 Avenue NW	W Emerson Street	NW 87 Street
Seattle	North Truck Access	Holman Road NW	Nw 87 Street	Greenwood Avenue North
Seattle	North Truck Access	Greenwood Avenue North	Holman Road North	N 145 Street
Seattle	Strahnet N Port of Seattle	Mercer Street	Fairview Avenue North	Queen Anne Avenue North
Seattle	Strahnet N Port of Seattle	W Mercer Street	Queen Anne Avenue N	W Mercer Place
Seattle	Strahnet N Port of Seattle	W Mercer Place	W Mercer Street	Elliott Avenue North
Seattle	Strahnet N Port of Seattle	Elliott Avenue West	W Mercer Place	W Galer Street
Seattle	Strahnet N Port of Seattle	14 Avenue West	Elliott Avenue West	Magnolia Bridge
Seattle	Strahnet N Port of Seattle	Magnolia Bridge	E End Bridge	W End Bridge
Seattle	Strahnet S Port of Seattle	W Marginal Way SW	1 Avenue South Bridge	Chelan Avenue SW
Seattle	Strahnet S Port of Seattle	Chelan Avenue SW	W Marginal Way SW	Sw Spokane Street
Seattle	Strahnet S Port of Seattle	SW Spokane Street	Chelan Avenue SW	11 Cr Avenue SW
Seattle	Strahnet S Port of Seattle	SW and S Spokane Street	11 Cr Avenue SW	S Spokane SR Street
Seattle	Strahnet S Port of Seattle	S Spokane Street; N and S Roadway	South Spokane Street	6 Avenue South
Seattle	Strahnet S Port of Seattle	6 Avenue South	South Forest Street	South Spokane EB Street
Seattle	Strahnet S Port of Seattle	S Forest Street	6 Avenue South	Airport Way South
Seattle	Strahnet S Port of Seattle	11 Avenue SW; E and W Roadway	Sw Spokane Street	Sw Hanford Street
Seattle	Strahnet S Port of Seattle	11 Avenue SW	11 Er Avenue SW	Sw Florida Street
Seattle	Strahnet Waterfront Terminal	E Marginal Way South	Alaskan Nb Fy	Alaskan Way South
Seattle	Strahnet Waterfront Terminal	Alaskan Way South	E Marginal Way South	SR 519
Seattle	Strahnet Waterfront Terminal	Alaskan Way	Madison Street	Broad Street
Seattle	Strahnet Waterfront Terminal	Broad Street	Alaskan Way	Elliott Avenue
Snohomish County	Paine Field	Airport Road	Everett C/L	East Gibson Road
Snohomish County	Paine Field	128th Street SW	East Gibson Road	I-5
Spokane	Felts Field	Fancher Way	Trent Avenue	Rutter Avenue
Spokane County	Spokane International	Airport Drive	Spokane Inter. Airport	SR 2
Spokane County	Felts Field	Sprague Avenue	I-90	Fancher Road
Spokane County	Felts Field	Fancher Road	Sprague Avenue	SR 290
Tacoma	Strahnet Port of Tacoma	E Port of Tacoma Road	E 11th Street	South City Limits
Thurston County	Amtrack Station	Yelm Highway	Ruddell Road	Amtrack Station
Tukwila	Boeing Field Access	Boeing Access Road	M L King Jr Way	East Marginal Way
Tukwila	Boeing Field Access	East Marginal	Boeing Access	North C/L
Tumwater	Olympia Airport	Airdustrial Way	I 5	Capitol Way
Tumwater	Olympia Airport	Capitol Boulevard	Dennis Street	South C/L
Union Gap	Yakima Airport	Valley Mall Boulevard	I-82	Main Street
Union Gap	Yakima Airport	Main Street	Valley Mall Boulevard	North Corp Limit
Walla Walla Port	Walla Walla Airport	Airport Way/A Street	SR 12	6th Avenue
Whatcom County	Bellingham Airport	Bennett Drive	I 5 Intchange	W Bakerview Road
Whitman County	Pullman Airport	Airport Road	UAB	Pullman Airport
Yakima	Yakima Airport	South 1st Street	South C/L	Washington
Yakima	Yakima Airport City Sec	Washington Avenue	1st Avenue	28th Avenue
Yakima County	Strahnet Yakima Firing Center	Firing Center Road	I-82	Yakima Firing Center
Yakima County	Yakima Airport County Sec	Washington Avenue	1st Avenue	28th Avenue

8:P:LAG6

64.1 General Discussion

In 1988, the Federal Highway Administration (FHWA) issued substantial revisions to the National Bridge Inspection Standards (NBIS). This resulted in stricter, more demanding bridge inspection criteria with which state and local agencies must comply.

This chapter outlines current NBIS requirements and discusses inspection program Quality Assurance Reviews, Major Bridge Repair Reporting, and Washington State Department of Transportation (WSDOT) inspection services available to local agencies.

The NBIS requires: (1) A bridge inspection organization staffed by qualified employees; (2) preparation, establishment, and maintenance of bridge records, including a Master List of bridges requiring underwater and special inspections; (3) performance of all required inspections and establishment of inspection schedules for each type of inspection; (4) computation and assignment of a safe load-carrying capacity for each structure inspected, and; (5) scour screening/analysis of bridges over water to determine scour susceptibility.

64.2 Qualifications/Training of Inspection Personnel

The NBIS require formation of a bridge inspection organization staffed by qualified employees who meet the minimum qualifications outlined in Section 64.21 below. The local agency bridge engineer is responsible for ensuring that bridge inspection personnel meet the minimum qualifications.

A Bridge Inspector Experience and Training Record for each employee is maintained by the Local Agency (see forms). This record contains the employee's educational data (name of school, major, number of years, and degree); any state professional registration number; titles and hours of inspection training courses taken; titles and hours of special technical training courses taken; accumulated bridge inspection experience; and a WSDOT inspector identification number. A WSDOT inspector identification number will be issued when a copy of a completed Bridge Inspector Experience and Training Record, signed by the Local Agency, is sent to the TransAid Bridge Engineer.

The NBIS require the following minimum qualifications for bridge inspection personnel:

.21 Agency Bridge Inspection Organization Administrator.

a. Must be a registered Professional Engineer, **or**

b. Be qualified for registration as a professional engineer under state laws, **or**

c. Have a **minimum** of ten years' experience in bridge inspection assignments in a responsible capacity **with** completion of a comprehensive training course based on FHWA's *Bridge Inspector's Training Manual/90* and subsequent additions.

.22 Agency Bridge Inspection Team Leader.

a. Must have the same qualifications as the organization administrator; or

b. A minimum of five years' experience in bridge inspection assignments in a responsible capacity a**nd** completion of a comprehensive training course based on the *Bridge Inspector's Training Manual/90*.

An alternative acceptable means for establishing bridge inspection team leader qualifications is current certification as a Level III or IV Bridge Safety Inspector under the National Society of Professional Engineer's program for National Certification in Engineering Technologies (NICET). (**Note:** NICET Certification is not a substitute for the number of years' experience required in either classification above.)

.23 Bridge Inspector's Assistant.

a. The NBIS do not set specific training or educational requirements for this position; however, the FHWA publication *Bridge Inspector's Training Manual*/90 suggests that the assistant have the following background:

- Graduation from a standard or vocational high school is a minimum requirement; two years of experience in one or more of the following fields is desired but not mandatory: (1) structural maintenance; (2) structural inspection; (3) high steel construction; (4) surveying.

Training for local agency staff is offered each year by the TransAid Service Center. The classes are specifically designed to offer local agency employees an opportunity to upgrade their bridge inspection skills and enhance their ability to effectively perform the variety of inspections now required by the NBIS. Available training includes: Bridge Inspection Fundamentals, 32 hours; SWIBS Coding, 24 hours, and; Bridge Inspection, 64 hours.

Further information and details about these training opportunities can be obtained from the TransAid Bridge Engineer.

64.3 Records and File Requirements

An accurate and current file for each bridge must be maintained by the owner agency as well as current, accurate information about bridge inspection personnel and the bridge inspection program.

.31 Inventory Records. The NBIS require that an inventory of all bridge structures meeting the definition of a bridge be prepared and maintained, and that all structure inventory and appraisal data be compiled and retained for collection by the Federal Highway Administration (FHWA) as needed.

In Washington, inventory records for bridges are kept and maintained in one computer database called the State of Washington Inventory of Bridges and Structures (SWIBS). From this database, information can easily be forwarded to the FHWA upon request; transferred to the national database called the National Bridge Inventory (NBI); or formatted into reports.

Inventory records in the SWIBS system can be created, deleted, or updated by using the Inventory Coding Form and the Inspection Coding Form; or, by using the County Road Administration Board's (CRAB) PC-based system. These records are established and maintained to accurately reflect the current conditions and configurations for each bridge throughout its service life. While another agency may maintain the records or perform the inspections, responsibility for the bridge's safety rests with the owner agency.

.32 Bridge Files. Each bridge file must include the following:

a. Bridge inventory information (current SWIBS form).

b. Copies of present and previous inspection reports.

c. Bridge maintenance history (repairs recommended and made).

d. Elevation and deck photographs.

e. Bridge plans if available. (May be kept separately if they are well organized.)

f. Bridge load rating calculations.

g. Bridge scour calculations.

h. Correspondence relating to the bridge.

i. Other relevant information.

.33 Master List. Section 650.303, subsections (e) (1-4) of the NBIS require that a Master List be maintained for:

a. Bridges with fracture critical members.

b. Bridges with underwater components which cannot be visually evaluated at low water or examined by feel due to excessive water depth or turbidity.

c. Bridges having unique or special features requiring additional attention during inspection.

Information on the Master List must contain the last inspection date, a description of findings, and follow-up actions for each bridge.

The person in charge of the local agency bridge inspection unit is responsible for determining which bridges will be kept on the Master List, their inspection frequency, the inspection, and procedures.

.34 General Files. Information about the inspection program which must be kept on file includes:

a. Correspondence relating to the bridge inspection program.

b. Master Lists (see Section .33).

c. Personnel files.

Further information and instructions on bridge and other files is available in Section 5 of the *Local Agency Bridge Inspection Manual.*

64.4 Inspection Types and Frequencies

In most cases, the NBIS require bridge inspections at least once every two years; however, some flexibility in determining inspection frequency has been provided.

Certain bridges, such as those showing an extensive or rapid degree of wear or deterioration, will require inspection more frequently than every two years. The frequency and depth of the inspection will depend on a variety of factors which are evaluated by the person in charge of the inspection program.

Inspection data are kept in the State of Washington Inventory of Bridges and Structures (SWIBS) and in each bridge file. Inspections required by the NBIS include:

a. **Inventory Inspection.** This is a bridge's first required inspection. It is done before new bridges go into service; when existing bridges are added to the inventory; when detour bridges are in service longer than three years; or when major changes to an existing bridge are made. Data from this inspection provides baseline information and verifies data entered on the SWIBS Inventory Coding Form. Completion of this form adds the structure to SWIBS, where it will remain throughout its service life.

Under the newly established procedures (1988 NBIS revisions) certain elements of the inventory inspection will have to be performed on every bridge. This includes coding new fields; verifying data; adding baseline stream cross sections; performing scour evaluations; conducting fathometric surveys, and other factors which are now required.

b. **Routine Inspections.** These provide observations and measurements used to track the bridge's physical, structural, and functional condition throughout its use and until it is removed from service. The frequency is at least once every two years at regular intervals.

c. **Fracture Critical Inspections.** These are required on all bridges which contain one or more fracture critical members. The frequency is every two years, or more often if necessary. Typical examples of fracture critical members are pins on trusses and pins and links on two-steel girder systems.

d. **Underwater Inspections.** These are required on bridges with elements not visible from the surface or not accessible to examination at low water. The frequency is at least once every five years.

e. **Scour Inspection.** The purpose of the scour inspection is to assess the current condition and depth of the streambed, determine the susceptibility of the streambed to scour, and determine what countermeasures can be taken to safeguard the bridge. Minimum inspection frequency is once every two years on any bridge with piers on erodible soils.

f. **Unique/Special Features Inspections.** Special inspections are required for all bridges having unique design features requiring special expertise, equipment or inspection procedures. Such features should be identified on the bridge inventory coding form and on the Master List. Examples include (but are not limited to) movable, suspension and cable-stayed bridges, or bridges of sufficient height to warrant the use of an Under Bridge Inspection Truck (UBIT).

g. **UBIT Inspections.** An Under Bridge Inspection Truck (UBIT) is used to provide the inspector sufficient access to bridge elements or members which would otherwise be too far out of reach for adequate evaluation. This inspection usually represents an additional function within the routine inspection and is performed as often as necessary to determine the structure's condition.

h. **In-Depth Inspection.** This is not generally required for an entire bridge but is utilized to further analyze or assess known or suspected deficiencies revealed during a Routine Inspection. Frequency: As needed.

i. **Damage Inspections.** These are conducted when bridge damage has occurred or is suspected due to environmental or human causes. Frequency: As needed.

j. **Interim Inspections.** This is a partial inspection performed to monitor and evaluate bridge members known or suspected of being deficient or highly susceptible to rapid deterioration. Frequency: As needed during the interval between routine inspections.

k. **Flood Inspections.** These are performed during or immediately after significant flooding at bridge sites with a potential for flood or scour damage. Frequency: As needed.

64.5 Bridge Load Ratings

The NBIS require that each structure subject to inspection be rated for safe load-carrying capacity in accordance with Section 6 of AASHTO's *Manual for Condition Evaluation of Bridges 1994*. To meet these requirements, there are three rating methods which can be used: the Load and Resistance Factor Design (LRFD) Method, or the Working Stress (WS) Method, or the Load Factor (LF) Method.

FHWA requires that all operating and inventory ratings be entered into the SWIBS inventory record in the AASHTO HS20 loading format. FHWA has established the Load Factor (LF) Method as the rating method for all steel and concrete structures. Requirements for timber structures, which are currently rated using the working stress method, are not expected to change.

For each bridge, calculations of safe load-carrying capacities for the following truck configurations are made:

- AASHTO Type 3
- AASHTO Type 3S2
- AASHTO Type 3-3
- Overload 1 (Optional)
- Overload 2 (Optional)

Calculations for the first three loadings listed above are required by the NBIS; the two overload configurations are not required but their use is recommended to assist agencies in better assessing overload capacities throughout their jurisdictions.

The operating and inventory rating as established for the loading is to be recorded in the bridge inventory records (SWIBS), along with the method used to arrive at this rating.

If the maximum legal load allowed on state roads by RCW 46.44.041 exceeds a bridge's acceptable safe load capacity as determined by AASHTO load rating procedures, the bridge must be posted to show its maximum load limit. Such posting must be in accordance with Washington Administrative Code (WAC) 468-95. If the bridge condition changes sufficiently to affect its load-carrying capacity, the load rating must be updated.

64.6 Bridge Scour Analysis

FHWA requires a scour screening/analysis of all bridges over water. Listed below is the two-step process:

1. Initial screening of all bridges over water to determine if they are scour critical or not. The bridge pier scour evaluation form found in the *Local Agency Inspection Manual* and the Bridge Exclusion List are used for this screening. If the bridge is identified as low risk for scour, no further calculations are required.

2. Bridges that cannot be determined to be safe from the initial scour screening are further analyzed using FHWA publications HEC 18 and HEC-20. Each bridge's susceptibility to scour damage must be determined either, (1) stable for calculated scour conditions, (2) scour critical, or (3) scour risk cannot be determined due to unknown foundations.

At the completion of the scour analysis, the proper code needs to be recorded in the bridge inventory records (SWIBS).

64.7 Quality Assurance Reviews

To ensure that compliance with the NBIS is maintained and that local bridge inspection programs are functioning effectively, the WSDOT TransAid Bridge Engineer conducts annual Quality Assurance Reviews statewide. A sufficient number of reviews are conducted to ensure review of all agencies at least every three years. The reviewer works with agency personnel in evaluating the program's strengths and weaknesses and makes suggestions for correction of any program deficiencies. Those elements of a local agency inspection organization which will be closely scrutinized include:

a. Certification of staff qualifications made by the public works director or Local Agency engineer; confirmation that the organization's bridges are being inspected by personnel who meet the qualifications outlined by the NBIS;

b. Availability of the necessary equipment to perform required inspections;

c. Completeness and organization of bridge files;

d. Accurate and current Master Lists;

e. Completion of accurate bridge load ratings for each structure subject to inspection;

f. Thoroughness and completeness of inspections;

g. Inspection timetable, i.e., timely completion of inspections at proper intervals as outlined by the NBIS.

Following this review, a close-out conference is held to discuss the report. Formal findings are prepared and are reviewed and signed by the Assistant Secretary for TransAid. The findings are then sent to the local agency.

In addition to the Quality Assurance Review, the Federal Highway Administration coordinates with TransAid engineers in conducting their periodic reviews of bridge inspection programs statewide. Both state and local agencies are visited, recommendations for improvements are made, and reports are filed. If a local agency program is out of compliance with the NBIS in a given area, a request to achieve compliance will be made. If the agency fails to do so, federal highway funds can be withheld until compliance is achieved.

64.8 Major Bridge Repair Reports

A Major Bridge Repair Report must be submitted to the TransAid Bridge Engineer when a bridge has failed, or when an inspection results in temporary closure, or load posting pending repairs. The TransAid office should also be notified by telephone of bridge failures resulting in death or serious injury within one working day.

The FHWA periodically samples these reports to verify that the need for repair was reported promptly and that the recommended repairs were completed in a timely manner. The FHWA may also conduct field checks to verify that the work has been accomplished as stated. Local agencies should be prepared to show evidence that they are carrying out major bridge repair in a timely manner.

64.9 WSDOT and Other Inspection Services

Local agencies can request bridge inspection assistance through the TransAid Service Center. Such assistance is rendered on a cost-reimbursable basis. Partial funding assistance has been provided to those agencies facing the greatest financial impact in meeting the new inspection requirements.

The TransAid Bridge Engineer will meet with local agency representatives wanting to contract with WSDOT, and will assist them in preparing a bridge inspection agreement. Inspection services available through WSDOT include: routine inspections, underwater inspections, fracture critical inspections, UBIT inspections, fathometric surveys, bridge load rating calculations, bridge scour analysis, and special inspections.

WSDOT can also provide local agencies with special inspection equipment such as a UBIT, on an hourly fee basis. Contact the TransAid Bridge Engineer. See the forms section of this manual for an example of the Bridge Inspection Agreement used by WSDOT to assist local agencies.

Local agencies can also arrange to have outside consultants provide some or all of their inspection services. Local agencies can contract independently with a qualified consultant or they can contract with the WSDOT Bridge Office to hire a consultant qualified to meet their needs. The Bridge Office maintains files on consultants qualified to provide bridge inspection services required by the NBIS.

Forms

WSDOT Form 140-093 Bridge Inspection Agreement

LAG Form Bridge Inspector Experience and Training Record

9:P:LAG6

Washington State Department of Transportation

BRIDGE INSPECTION AGREEMENT WORK BY STATE	ORGANIZATION AND ADDRESS	
AGREEMENT NO.	ESTIMATED COSTS See Exhibit "A"	DESCRIPTION OF WORK See Exhibit "A"

This AGREEMENT made and entered into this _____ day of _____, _____ by and between the State of Washington, Washington State Department of Transportation, acting by and through the Secretary of the Department of Transportation, under virtue of RCW 47.28.140, and hereinafter designated as the "STATE," and the above named organization, hereinafter designated as the "AGENCY,"

Whereas, the AGENCY has requested the STATE to perform certain work as described above, and the AGENCY does not have adequate personnel or equipment to perform the work,

NOW THEREFORE, IT IS HEREBY AGREED AS FOLLOWS:

I
GENERAL

The STATE as agent, acting for and on behalf of the AGENCY, shall perform Bridge Inspection work as described on attachment(s). The work is to be performed on a frequency described in the State of Washington Inventory of Bridges and Structures (SWIBS). The attachment describes the initial work to be performed and includes an estimated cost of the initial work to be performed.

As the above described work is required on a routine basis, this agreement shall remain in effect until terminated in writing by either the AGENCY or the STATE. At least thirty days notice shall be given for termination.

A document describing the annual work to be performed by the STATE, and an estimated cost of the annual work, shall be furnished to the AGENCY on an annual basis.

II
PAYMENT

The AGENCY agrees to reimburse the STATE for Bridge Inspection work in accordance with the current Department of Transportation rate schedule for this type of work. The STATE shall furnish the AGENCY with a current rate schedule upon request.

The AGENCY agrees further that if payment for progress billings is not made to the STATE within forty-five (45) days after the AGENCY has been billed for the work, the STATE may withhold any monies which the AGENCY is entitled to receive from the Motor Vehicle Fund and apply the withheld monies to the amount billed by the STATE until satisfied.

III
INDEMNIFICATION AND HOLD HARMLESS PROVISION

The AGENCY shall indemnify and hold the STATE, its employees and officers harmless from and shall process and defend at its own expense any and all claims, damages, suits or penalties, losses, or costs of whatsoever kind or nature (hereafter, claims) arising in any way from the project, including but not limited to claims brought by any contractor or subcontractor, any governmental agency or any third party for injury, death or damage to property both real and personal. The AGENCY specifically and expressly agrees that it waives its immunity under industrial insurance (Title 51 RCW) with respect to any claims brought by the AGENCY employees against the STATE and that such waiver was mutually negotiated by the parties. It is further understood and agreed that by this reference RCW 4.24.115 (as amended by Ch. 305, Laws of 1986) is incorporated in and made a part of this indemnity and hold harmless provision as though expressly set forth herein.

IV
RIGHT OF ENTRY

The AGENCY hereby grants and conveys to the STATE the right of entry upon all land which the AGENCY has interest, within or adjacent to the right of way of the highway or street for the purpose of accomplishing the work described as part of this agreement.

IN WITNESS WHEREOF, the parties hereto have executed this AGREEMENT as of the day and year first above written.

LOCAL AGENCY

By: _____

Title: _____

Date: _____

STATE OF WASHINGTON DEPARTMENT OF TRANSPORTATION

By: _____

Title: _____

Date: _____

Bridge Inspector Experience and Training Record

Team Leader Name: _____

Agency Name: _____

WSDOT Inspector Identification Number: _____

Education:

Institution	Major	Years	Degree

Professional Registration:

State	Branch	Reg. No.

Bridge Inspection Training:

Course	Hours	Sponsor	Date

Special Technical Training:

Course	Hours	Sponsor	Date

Bridge Inspection Experience:

Agency/Firm	Bridge Duties	Years	

To the best of my knowledge, the above information is true and accurate.

Team Leader's Signature: _____

Having reviewed the above information, I conclude that this individual meets the minimum qualifications for a bridge inspection team leader as specified in the current National Bridge Inspection Standards (see back of form).

Signature of Agency Head
or Consulting Firm Head: _____

Name (print or type): _____

Title: _____

Date: _____

National Bridge Inspection Standards

Appendix C — Code of Federal Regulations
650.307 Qualifications of Inspection Personnel

a. The individual in charge of the organizational unit that has been delegated the responsibilities for bridge inspection, reporting, and inventory shall possess the following minimum qualifications:

   1. Be a registered professional engineer, or
   2. Be qualified for registration as a professional engineer under the laws of the state, or
   3. Have a minimum of 10 years in bridge inspection assignments in a responsible capacity and have completed a comprehensive training course based on the *Bridge Inspector's Training Manual*.

b. An individual in charge of a bridge inspection team shall possess the following minimum qualifications:

   1. Have the qualifications specified in paragraph (a) above, or
   2. Have a minimum of 5 years experience in bridge inspection assignments in a responsible capacity and have completed a comprehensive training course based on the *Bridge Inspector's Training Manual*, or
   3. Have current certification as a Level III or IV Bridge Safety Inspector under the National Society of Professional Engineer's program for National Certification in Engineering Technologies (NICET).

65.1 General Discussion

To ensure that transportation facilities developed using Federal Highway Administration (FHWA) and Federal Transit Administration (FTA) funds continue to operate safely with no loss of function during their useful lives, federal law requires that they be properly maintained. The local agency and the Washington State Department of Transportation (WSDOT) each have responsibilities in this area: the local agency maintains the projects, and the WSDOT reviews the local agency's maintenance efforts.

"To maintain" shall mean to perform normal maintenance operations for the preservation of the entire project, including roadway surface, shoulders, roadsides, structures, and such traffic control devices as are necessary for its safe and efficient utilization.

The local agency agrees in Section IX of the Local Agency Agreement to maintain projects constructed on any federal aid system.

A detailed description is given in Title 23, Subpart G, of the Code of Federal Regulations.

65.2 Review of Maintenance

WSDOT will conduct periodic reviews of the maintenance of federally funded projects by local agencies. The local agency will be contacted by the Regional TransAid Engineer when deficiencies in their maintenance of the projects are reported.

65.3 Management Systems

.31 General. TransAid is firmly committed to assisting local agencies in implementing management systems. Although not required for use of federal funds, implementation of management systems are required for sound management practices. Management systems are a valuable tool to provide consistent, accurate, and objective information to base management decisions throughout the agency's management processes. They provide the most effective method for an agency to manage its resources whether those resources are its funds, work force, or capital assets.

The purpose of the management systems is to improve the efficiency of the local agency's transportation system and to protect its investment in transportation infrastructure. These systems act as tools to provide pertinent information necessary to make more effective management decisions.

TransAid encourages agencies to implement their own management systems for bridges, safety, pavements, and where applicable, to participate actively in their regional congestion management system.

Federal funds available to develop and implement the management systems include:

- National Highway System.
- Surface Transportation Program.
- FHWA State Planning and Research.
- CM/AQ funds may be used in certain cases where the system will contribute to attainment of national air quality standards.
- Highway Bridge Replacement/ Rehabilitation Program funds may be used for a bridge management system and the input and maintenance of data.
- Federal Transit Act, Section 9 (Capital, Planning, and Operating).
- Federal Transit Act, Section 9 (Transit Planning).
- Federal Transit Act, Section 26(a)(2) (State Planning and Research).

.32 Pavement Management System (PMS). PMS is a systematic process that provides, analyzes, and summarizes pavement information for use in selecting and implementing cost-effective pavement construction, rehabilitation, and maintenance programs. PMS applies to all federally functional classified routes except those classified as rural minor collector or local.

WSDOT recommends all agencies implement a computerized PMS if possible. All counties are required to have a PMS, per WAC 136-320, to receive County Arterial Preservation Program (CAPP) funds. The benefits gained with such a system far out weigh the slight increase in effort and initial expense. To provide full benefits, the system should include a method of data collection/ management and data analysis. Elements of data collection/ management should include:

- an inventory of the road/street network;
- work history of the network including surfacing and base layer types, thickness, and year of application;
- a routine survey of the road/street pavement surface condition at least every two years using the *Pavement Surface Condition Rating Manual*; and
- a method of storing and retrieving the collected data.

The areas of analysis should include pavement surface condition performance with a prediction model that uses the pavement surface distress data to predict future pavement condition and service life, investment at both the network and project level, and the performance of the pavement management system itself.

Most agencies in the state currently involved with PMS have systems based on data collection described in the *Pavement Surface Condition Rating Manual*. Agencies are strongly encouraged to use this process since it is a proven method used by most agencies. It conforms to WAC 136-320 (for counties), and provides both cities and counties a wealth of support through existing training courses, manuals, videos, and experience of other agencies already using the method.

There are software packages available through several private vendors, CRAB, and TransAid that meet these specifications and conform to the common methodology used within Washington State.

Although a computerized system is recommended, TransAid provides StreetWise, a simplified paper-and-pencil system, to store data and calculate the pavement surface condition for those smaller agencies that do not want to use a computerized process. StreetWise is designed to help smaller agencies manage their street network at the entry level. When added to a basic filing system and work history, StreetWise provides a very functional PMS. It is based on the more sophisticated computerized systems used by larger agencies in Washington and results in pavement condition ratings that are comparable. This means that if an agency opts to use a computer software version at a later date, both the inventory and inspection data are usable, no historical data or collection efforts are lost.

StreetWise has been designed with the smaller city street network in mind and was developed with extensive input from several small cities. The system provides a basic inventory, data collection/storage, pavement surface condition evaluation, maintenance strategy, and budget summary. It provides the ability to prioritize maintenance/construction needs but stops short of providing a predictive model for determining pavement life expectancy or service life. For these features, the agency should use a computer software version.

StreetWise is comprised of a Pavement Condition Form and five look-up tables to determine the pavement condition. An additional Budget Summary Sheet is also provided to assist in developing a pavement maintenance/construction budget. To increase simplicity, data collection and mathematical calculations have been minimized.

While StreetWise is useful, smaller agencies are strongly encouraged to adopt and implement a PMS program like those in use by the larger jurisdictions because of the forecasting capabilities they offer. The benefits that this capability offers in long-range planning, program development, and budgeting far outweigh the additional effort required to operate a computerized system.

Washington Local Agency Pavement Management Resources

Pavement Management Programs

TransAid	(360) 705-7383	• PaveSmart • StreetWise (NonComputer)
CRAB	(360) 753-5989	• CPMPS-CRIS
Various Vendors		
NWPMA	(360) 705-7383	• Interagency Support

Training and Direct Support

TransAid	(360) 705-7383	• PaveSmart • StreetWise • Introduction to PMS • Direct Support
CRAB (Counties)	(360) 753-5989	• CPMPS • CRIS • Introduction to PMS • Direct Support
TRANSPEED	(206) 543-5539	• Introduction to PMS • Effective Implementation of PMS
NWT^2 Center	(360) 705-7477	• Pavement Condition Rating • NHI Courses • General Training Services
Various Vendors		• Training • Direct Support

Publications and Other Aids

TransAid	(360) 705-7386	• *A Guide for Local Agency Pavement Management* • *Pavement Surface Condition Rating Manual* • *Pavement Surface Condition Rating Video*

.33 Bridge Management System (BMS). The purpose of a management system for bridges is to provide necessary information for making sound decisions on maintenance, repair, rehabilitation, or replacements of bridges. BMS applies to all bridges on all public roads.

BMS is a decision support tool that supplies analyses and summaries data, has mathematical models to make predictions and recommendations, and provides the means by which alternative policies and programs may be efficiently considered. A BMS includes formal procedures for collecting, processing, and updating data, predicting deterioration, identifying alternative actions, predicting costs, determining optimal policies, performing short- and long-term budget forecasts, and recommends programs and schedules for implementation within policy and budget constraints.

The BMS is managed by the WSDOT Bridge and Structures Office. The state uses Pontis, a software package developed by AASHTO and sponsored by FHWA. The Bridge Office maintains the database and provides system output. Local agencies have had direct involvement in Pontis implementation through the Bridge Inspection Committee (BIC) and the Bridge Replacement Advisory Committee (BRAC). For further information, contact the TransAid Bridge Engineer at (360) 705-7379.

Local agencies are not required to implement Pontis themselves, but it is available if they desire to do so. They may use their existing systems and processes. Agencies shall perform their own bridge condition surveys and provide the condition data to WSDOT.

Although the Pontis Survey format is different than that used for the National Bridge Inventory (NBI), a separate inspection to collect data is not necessary. There is currently computer software in development that will be used by WSDOT to automatically convert Pontis data to the NBI format. Until the new software is fully developed, data will need to be collected in both the existing and Pontis formats.

TransAid will support local agencies in implementing the statewide system by providing training for inspectors in condition surveys and to other staff in using the Pontis output. Training and technical assistance in the use of Pontis itself will also be available, for those agencies who choose to use it themselves.

.34 Highway Safety Management System (SMS). SMS is a systematic process that has the goal of reducing the number and severity of traffic crashes.

The Washington SMS has two key elements, the collaboration process and the decision process. The collaboration process is basically a communications and information sharing network that links all of the state's safety stakeholders for sharing information and safety needs. The central feature of this process is the SMS Standing Committee, a formalized, multi-jurisdictional team comprised of all transportation safety stakeholders in Washington. Team members represent federal, state, regional, and local organizations, including individual cities and counties if they choose to participate. The committee provides a forum for sharing safety needs, identifying solutions, and coordinating implementation of the solutions. The Standing Committee has established several subcommittees to focus on specific areas such as funding, training, programming, etc., and active local agency participation is greatly encouraged.

The second key element is the Five-Step Process, a simple, logical step-by-step process to assist in making effective safety decisions. Those steps are:

1. Needs Identification
2. Solution/Resource Development
3. Investment Prioritization/Implementation
4. Investment Tracking
5. Investment Evaluation

Local agencies are strongly encouraged to review and evaluate their current transportation safety procedures and processes to see where they can be improved with respect to the Five-Step Decision Process.

Although developing a formalized SMS within an agency is not mandated within the Washington State SMS, TransAid recognizes the need for such systems and the benefits gained in saving lives and in reducing injuries. A local agency SMS will provide an objective method of identifying those safety problems and the countermeasures that will provide the most effective payback. As a result, TransAid strongly encourages local agencies to become involved in enhancing their own safety management process and is actively supporting those agencies in their effort to do so.

.35 Congestion Management System (CMS). CMS is a systematic process that provides information on transportation system performance and alternative strategies to alleviate congestion and enhance the mobility of persons and goods. The purpose of CMS is to develop, establish, and implement a system for managing congestion. The CMS is managed at the MPO and state levels. Cities, counties, and those MPOs without Transportation Management Areas (TMAs) are required to have their own individual congestion management systems. The three MPOs with the three TMAs will manage their own self-defined systems. WSDOT will be responsible for the remainder of the state.

The CMS is centered around Washington's existing planning and programming processes with modifications. It consists primarily of the congestion evaluation and needs assessment processes used to produce the current "Washington Transportation Policy Plan" and the "Washington State Systems Plan."

A committee composed of WSDOT, MPOs, transit agencies, cities, counties, transportation researchers, and FHWA provides coordination between the individual participating system managers in the areas of CMS components, scoping, and analysis of statewide topics related to CMS.

.36 Traffic Monitoring Systems for Highways (TMS). TMS is a systematic process for the collection, analysis, summary, and retention of highway related person and vehicular traffic data, including public transportation on public highways and streets.

The TMS is not a management system but rather a series of requirements for data collection supporting the management system and various federal data collection processes.

These monitoring requirements are managed by the WSDOT TRIP Division. Data collected by local agencies that is supplied to FHWA or to the six management systems must meet these requirements. A detailed description of the requirements of the TMS can be found in Title 23, Subpart H, of the Code of Federal Regulations.

11:P:LAG6

List of Forms

	Form Number	Rev. Date
Project Initiation		
Six-Year Transportation Improvement Program	140-049	4-95
Local Agency Federal Aid Project Prospectus	140-101EF	1-97
Impact of Specific Damage	DES-128	
Preliminary Damage Assessment Worksheet	DES-129	
Preliminary Damage Assessment Report	DES-130	
Preliminary Damage Assessment Form	FHWA	
Damage Assessment Form (Detail)	140-516LAG	
Special Transportation Planning Study Agreement	224-080	8-95
Request Preliminary Engineering Funds		
Local Agency Agreement	140-039	8-95
Progress Billing		
Federal Aid Request for Payment	PPC2	4-91
Consultant Selection Process		
Independent Estimate for Consultant Services	140-012	10-82
Standard Consultant Agreement Form	140-089	2-93
Supplement to Consultant Agreement	140-063	3-91
Personal Service Contract for Appraiser		8-86
Consultant Agreement for Acquisition Services		
Location and Design Approval		
A Guideline for 2-R and 3-R Projects		
Environmental		
Environmental Classification Summary	140-100EF	1-97
Right-of-Way Funding and Acquisition		
Government Agreement for Aid	224-075	9-93
Federal Aid Requirement Checklist		10-90
Disclosure of Lobbying Activities	LLL	
Bridge Inspection		
Bridge Inspection Agreement	140-093	3-92
Bridge Inspector Experienced and Training Record		
Plans, Specifications, and Estimates		
Standard Local Agency Railway Agreement	140-044	8-95
Required Contract Provisions, Federal Aid Construction Contracts	FHWA-1273	8-89
Federal Aid Proposal Notice	272-036G	8-85
Noncollusion Declaration	272-036H	4-92
Bid Proposal Signature Sheet	272-036D	7-91
Contract	272-006A	1-90
	272-007A	1-90
Wage Rates Request Form	221-008A(X)	4-91
Local Agency Plans Preparation Checklist		

	Form Number	Rev. Date
Request Construction Funds		
Supplement to Local Agency Agreement	140-041	8-95
Local Ad and Award		
Award of Contract		
Bid Price Data	FHWA-45	12-88
Contract Bond	272-002A	6-90
Construction Administration		
Intent to Pay Prevailing Wages	F700-029-000	6-93
Change Order — State Ad and Award	140-005	8-91
Weekly Statement of Working Days	422-022	5-86
For Other Forms, see LAG Manual listing and WSDOT *Construction Manual* — Chapter 11, Forms		
Project Completion		
Affidavit of Wages Paid	LI 700-7	11-89
Affidavit of Wages Paid to DBE Participants	140-542	8-95
Certification of Material		
Final Inspection of Federal Aid Project	140-500	8-95

The following forms are provided in the WSDOT *Construction Manual* M 41-01 (CN) in Chapter 11.

Form No.	Form Name
421-023	Affidavit of Amounts Paid DBE/MBE/WBE Participants
272-050	Apprentice/Trainee Approval Request
350-022	Approved for Shipment Sticker
350-021	Approved for Shipment Tag
350-092	Asphalt Concrete Pavement Compaction Control Report
350-072	Asphalt Concrete Pavement Compaction Control Report Underlying Readings
421-026	Asphalt Concrete Pavement Random Sample Worksheet
350-073	Asphalt Concrete Test Section Report
440-002	Asphalt Paving Projects Rating Program
350-016	Asphalt Sample Label
540-020	Backflow Device Test Report
350-043	Certification of Cement Shipment
350-109	Certification of Materials Origin
450-001	Concrete Delivery Ticket
350-009	Concrete Test Cylinder Transmittal Letter
421-506	Contract Progress Schedule
420-004	Contractor and Subcontractor or Agent Certification for Federal-Aid Projects
350-112	Correlation Nuclear Gauge to Core Density
351-015	Daily Compaction Test Report
422-002	Daily Report of Asphalt Plant Operations
422-008	Daily Report of Force Account Worked
422-644	Daily Report of BST Operations
350-142	Daily Report of Street Operations
424-003	Employee Interview Report
421-014	Examination Sheet for Contract Items
350-004	Fabrication Progress Report
750-001	Fall Protection Plan
272-060	Federal-Aid Highway Construction Annual Project Training Report
PR-1391	Federal-Aid Highway Construction Contractors' Annual EEO Report
272-061	Federal-Aid Highway Construction Cumulative Training Report
PR-1392	Federal-Aid Highway Construction Summary of Employment Data
350-074	Field Density Test Report (Nuclear Gauge)
422-635	Field Note Record
422-637	Field Note Record for Drainage
422-636	Field Note Record (Sketch Grid)
134-146	Final Contract Voucher Certificate
FHWA-1446C	Final Inspection of Federal-Aid Project
422-018	Final Record Notes Plain
422-009	Final Record Notes Title Page
422-009B	Final Record Notes Title Page
230-036B	Follow-Up Documentation Review
422-010	Force Account Equipment Rate Request
350-564	Gradation Chart 0.45 Power
350-010	Grading Chart
230-036A	Initial Documentation Review (Procedures)
422-004	Inspector's Daily Report
422-004A	Inspector's Daily Report
422-020	Inspector's Record of Field Test
422-021	Item Quantity Ticket
351-003	Log of Test Borings

Form No.	Form Name
272-051	M/D/WBE On-Site Review
350-077	Materials Acceptance Report
350-115	Material Certification and Project Checklist
351-005	Maximum Density Curve
272-054	Monthly Employment Utilization Report Worksheet
350-054	Monthly Progress Sampling and Inspection Report
350-053	Notice of Asphalt Shipment
421-007	Order to Resume Work
421-006	Order to Suspend Work
440-004	Pavement Roughness Test
540-506	Pesticide Application Record
450-004	Pile Book
350-023	Pit Evaluation Report
450-005	Post-Tensioning Record
350-026	Preliminary Sample Transmittal
350-086	Prestress Pile Record
450-002	Prestressed Concrete Girder Report
421-010	Prime Contractor Performance Report
421-025	Public Liability and Property Damage Insurance Certification
350-100	Quick Extraction
421-015	Recapitulation of Final Contract Examination
420-012	Recommended Changes to Specifications and Construction Manual
350-029	Record of Materials
SSA-53	Records Inventory Disposition Authority & Transfer Schedule
421-009	Release Retained Percentage (Except Landscaping)
350-042	Report of Beam Test
350-071	Request for Approval of Materials Source
421-012	Request to Sublet Work
50-056	Sample Transmittal
422-027	Scaleman's Daily Report
351-006	Soil Sample Transmittal Letter
FHWA-47	Statement of Materials and Labor Used by Contractors on Highway Construction
350-114	Summary Report of Acceptance, Sampling and Testing
350-044	Test of Concrete Pipe
410-027	Test Pile Record
350-067	Thickness Measurements: Pavement and Treated Base Cores Transmittal Report
422-012	Title Sticker Final Record Books
272-049	Training Program
410-025	Transmittal of Falsework, Form, and Shop Drawings
350-572	Transmittal of Manufacturer's Certificate of Compliance
CC257	U.S. DOL Monthly Employment Utilization Report
410-001	Verbal Approval
422-024	Water Delivery Record
440-001	Weekly Report of Pavement Construction
350-006	Weekly Report of Pore Pressure Measurements
350-007	Weekly Report of Settlement Measurements

1:P:LAG7

Acronyms

AASHTO — American Association of State Highway and Transportation Officials

ACHP — Advisory Council on Historic Preservation

ACP — Asphalt Concrete Pavement

ADA — Americans with Disabilities Act

ADT — Average Daily Traffic

AGC — Associated General Contractors

AMRL — AASHTO Materials Reference Laboratory

ANSI — American National Standards Institute

APWA — American Public Works Association

ATB — Asphalt Treated Base

BIC — Bridge Inspection Committee

BFRC — Benton-Franklin Regional Council

BMS — Bridge Management System

BRAC — Bridge Replacement Advisory Committee

BRR — Bridge Replacement and Rehabilitation, a federal aid funding program administered by FHWA and WSDOT

CA — Certification Acceptance

CAAA — Clean Air Act Amendments of 1990

CCIS — Construction Contracts Information System

CCRL — Cement and Concrete Reference Laboratory

CE (NEPA) — Categorical Exclusions

CE (SEPA) — Categorical Exemptions

CEQ — Federal Council on Environmental Quality

CFR — Code of Federal Regulations

CM/AQ — Congestion Mitigation and Air Quality Program

CMS — Congestion Management System

COA — Condition of Award

COG — Council of Governments

CRAB — County Road Administration Board

C3R — Close, Repair, Rehabilitate, or Replace

CTR — Commute Trip Reduction Legislation

CUF — Commercially Useful Function (DBE)

CZMP — Coastal Zone Management Program

CZMA — Coastal Zone Management Act

DAF — Damage Assessment Forms

DB — Disadvantaged Business

DBE — Disadvantaged Business Enterprise

DCD/DEM — Department of Community Development/ Division of Emergency Management

DEIS — Draft Environmental Impact Statement

DFO — Disaster Field Offices

DHV — Design Hourly Volume

DLI — Washington State Department of Labor and Industries

DNR — Department of Natural Resources

DNS — Declaration of Non-Significance (SEPA Document)

DOC — Federal Department of Commerce

DOE — Washington State Department of Ecology

DOI — Federal Department of the Interior

DOT — Federal Department of Transportation (same as USDOT)

DRM — Disaster Recovery Manager

DSR — Damage Survey Report

DS&S — Decent, Safe, and Sanitary (housing)

DT — Diagnostic Team

DV — Determination of Value

EA — Environmental Assessment; Economic Area

EAC — Enhancement Advisory Committee

ECR — External Civil Rights

EEO — Equal Employment Opportunity

EIS — Environmental Impact Statement

EO — Executive Order

EPA — Federal Environmental Protection Agency

EQA — Environmental Quality Administrator

ER — Emergency Relief

FA — Federal Aid

FAA — Federal Aviation Administration

FAPG — Federal Aid Policy Guide

FAS — Federal Aid Secondary

FAUS — Federal Aid Urban Systems

FEIS — Final Environmental Impact Statement

FEMA — Federal Emergency Management Agency

FERC — Federal Energy Regulatory Commission

FHWA — Federal Highway Administration

FLH — Federal Lands Highway

FMIS — Federal Management Information System

FMV — Fair Market Value

FONSI — Finding of No Significant Impact

FTA — Federal Transit Administration

FWCA — Fish and Wildlife Coordination Act

FWPCA — Federal Water Pollution Control Act

F&WS — Federal Fish and Wildlife Service (also USFWS)

GAR — Governor's Authorized Representative

GMA — Growth Management Act

GSP — General Special Provisions

HBRRP — Highway Bridge Replacement and Rehabilitation Program

HHS, HES — High Hazard and Hazard Elimination

HOV — High-occupancy Vehicle

HPR — Highway Planning and Research Projects

HUD — Federal Department of Housing and Urban Development

IC — Interstate Completion

IDT — Interdisciplinary Team

IISC — Institute ISTEA Steering Committee

IM — Instructional Memorandum (FHWA document)

IM — Interstate Maintenance

IMS — Intermodal Management System

ISTEA — Intermodal Surface Transportation Efficiency Act of 1991

ITE — Institute of Transportation Engineers

LA — Local Agency

LAG — Logal Agency Guidelines

LF — Load Factor

LPA — Local Public Agency

LRFD — Load and Resistance Factor Design

LRP — Long-Range Plan

L&I — Washington State Department of Labor and Industries

MOA — Memorandum of Agreement

MPO — Metropolitan Planning Organization

MUTCD — Manual on Uniform Traffic Control Devices

MSA and CMSA — Metropolitan Statistical Area

MSD — Material Sources Data

NAAQS — National Ambient Air Quality Standards

NACHP — National Advisory Council for Historic Preservation

NBI — National Bridge Inventory

NBIS — National Bridge Inspection Standards

NCHRP — National Cooperative Highway Research Program

NEPA — National Environmental Policy Act; see also SEPA

NHS — National Highway System

NICET — National Certification in Engineering Technologies

NMFS — National Marine Fisheries Service

NPDES — National Pollutant Discharge Elimination System

NPS — National Park Service of the Federal Department of the Interior

OA — Obligation Authority

OAHP — Office of Archaeological and Historic Preservation

OEO — WSDOT's Office of Equal Opportunity

OFCCP — Office of Federal Contract Compliance Programs (Department of Labor)

OFM — Washington State Office of Fiscal Management

OJT — On-the-Job Training

OMB — Federal Office of Management and Budget

OMWBE — Washington State Office of Minority and Women's Business Enterprise

OST — Office of the Secretary of Transportation

PCAA — Washington State Planning and Community Affairs Agency

PDA — Preliminary Damage Assessment

PDEIS — Preliminary Draft Environmental Impact Statement

PE — Preliminary engineering; also Professional Engineer

PL — Public Law

PM — Project Manager

PMS — Pavement Management System

PPM — Policy and Procedure Memorandum

P&PSC — Planning and Programming Service Center

PR — Preliminary Report

PSRC — Puget Sound Regional Council

PS&E — Plans, Specifications, and Estimates

PTMS — Public Transportation Management System

RCW — Revised Code of Washington

ROD — Record of Decision

RRP, RRS — Railway-Highway Grade Crossing

RTPO — Regional Transportation Planning Organization

R&D — Research and Development

R/R — Railroad, Railway

R/W — Right-of-Way

SCS — Soil Conservation Service (US Department of Agriculture)

SDWA — Safe Drinking Water Act

SEPA — State of Washington Environmental Policy Act

SHPO — Washington State Historical Preservation Officer

SIP — State Implementation Plan

SMS — Safety Management System

SMSA — Standard Metropolitan Statistical Area

SOV — Single Occupancy Vehicle

SRTC — Spokane Regional Transportation Council

STIP — Statewide Transportation Improvement Program

STP — Surface Transportation Program

Strahnet — Strategic Highway Network

SWIBS — State of Washington Inventory of Bridges and Structures

SWRTC — Southwest Washington Regional Transportation Council

SWW — Southwest Washington

TCP — Traffic Control Plan

TCM — Transportation Control Measures

TDM — Transportation Demand Management

TIP — Transportation Improvement Program

TMA — Transportation Management Areas

TMS — Traffic Monitoring System

TRB — Transportation Research Board

TRICO — Tricounty

TRPC — Thurston Regional Planning Council

TSM — Transportation System Management

TSME — Transportation Systems Management Element

TS&L — Type, Size, and Location Stage of Design

T2 — Technology Transfer

UBIT — Under Bridge Inspection Truck

USC — United States Code

USDA/USDOA — United States Department of Agriculture

USDOL — United States Department of Labor

USDOT — United States Department of Transportation (same as DOT)

USFS — United States Forest Service

USFWS — United States Fish and Wildlife Service (also F&WS)

UZA — Urbanized Area

VE — Value Engineering

WAC — Washington Administrative Code

WCCOG — Whatcom County Council of Governments

WDW — Washington State Department of Wildlife

WOAP — Work Order Accounting Plan

WS — Working Stress

WSDES — Washington State Department of Emergency Services

WSDOT — Washington State Department of Transportation

WSEO — State of Washington Energy Office

WUTC — Washington Utilities and Transportation Commission

YVCOG — Yakima Valley Council of Governments

2-R — Resurfacing and Restoration

3-R — Resurfacing, Restoration, and Rehabilitation

4-R — Resurfacing, Restoration, Rehabilitation, and Reconstruction

Glossary of Terms

ADA — The Americans with Disabilities Act of 1990 which mandates sweeping changes in building codes, transportation, and hiring practices to prevent discrimination against persons with disabilities, not just in projects involving federal dollars, but all new public places, conveyances, and employers.

Ad and Award — Advertising and award of a construction contract. Includes all aspects of contract administration.

Administrative Settlement — A negotiated settlement of a right of way acquisition case in which the acquiring agency has adminstratively approved payment in excess of fair market value as shown on the agency's approved determination of value (DV).

Agency Administrator — A local agency official empowered by position or delegated the authority to administer transportation projects.

Agency-Force Work — Construction work done by an agency's employees, or by one public agency for another.

Annual Average Daily Traffic (AADT) — The estimate of typical daily traffic on a road segment for all days of the week, Sunday through Saturday, over the period of one year.

Annual Element — The first year of a local agency's six-year Street or Road Program which is reviewed each year by the Areawide Clearinghouse to ensure intergovernmental coordination of transportation programs.

Annual Seasonal Factors — The set of 12 factors, one for each month of the year, that is used to adjust coverage counts to estimates of AADT. Annual seasonal factors make use of the full year's data collected by continuous counters.

Approval Authority — The position title designated in the Certification Acceptance Qualification Agreement as responsible for approving a document or stage of a federal aid transportation project.

APWA Amendments — A supplement to the WSDOT/ APWA Standard Specifications.

Areawide Clearinghouse — A regional planning agency that reviews the transportation programs of constituent agencies to ensure areawide coordination.

Automatic Traffic Recorder — A device that records the continuous passage of vehicles across all lanes of a given section of roadway by hours of the day, days of the week, or months of the year.

CA — Certification Acceptance, the process of approving local agencies to administer their federal aid transportation projects.

CAAA — The Clean Air Act Amendments of 1990 identify "mobile sources" (vehicles) as primary sources of pollution and call for stringent new requirements in metropolitan areas and states where attainment of National Ambient Air Quality Standards (NAAQS) is or could be a problem.

CE (NEPA) — Categorical exclusions, actions that do not individually or cumulatively have a significant effect on the environment.

CE (SEPA) — Categorical exemptions, actions that do not individually or cumulatively have a significant effect on the environment. CEQ — Federal Council on Environmental Quality.

CFR — The codified administrative regulations of the federal government.

CM/AQ — The Congestion Mitigation and Air Quality Program is a $6 billion funding program contained in Title I of ISTEA. Funds are provided for projects and activities which reduce congestion and improve air quality.

CMS — Congestion Management Systems require large metropolitan areas (200,000 population or more) and states to develop management plans which make new and existing transportation facilities more effective through the use of travel demand management and operational mangement strategies.

COG — Council of Governments is a voluntary consortium of local government representatives, from contiguous communities, meeting on a regular basis and formed to cooperate on common planning and to solve common development problems of their area.

C3R — Close, repair, rehabilitate, or replace options to improving existing public bridges.

CTR — The Commute Trip Reduction legislation which requires major employers in the eight most populated counties in the state to take measures to reduce the number of single occupant vehicle (SOV) trips and the number of vehicle miles traveled (VMT) by their employees.

City/County, Local Agency, or Agency — Any municipal corporation within the state of Washington.

Class I Projects — Those projects likely to have a significant impact and requiring an EIS.

Class II Projects — Those projects with no significant impact and excluded from environmental documentation requirements.

Class III Projects — Those projects in which the significance of impacts is not established. Such projects require an EA to evaluate the extent of the project impacts.

Coastal Zone Management — Applicants for federal permits or licenses must certify that their project will comply with the State Coastal Zone Management Program (Shoreline Management Act—RCW 90.58—applies to projects within 61 m (200 feet) of a shoreline).

Coast Guard Permit — A permit issued by the Coast Guard for all structures in navigable waterways (Rivers and Harbors Act (33 USC9).

Commitment File — A file containing a summary of local agency commitments made to other agencies or groups during project development which will be incorporated into the design and construction of a project.

Community — A major subdivision of a municipality, composed of neighborhoods, considered as a unit for planning purposes.

Completion Letter — A letter from the local agency Engineer notifying the construction contractor that a project is complete. A letter from the local agency notifying the Regional TransAid Engineer that the project is complete subject to inspection, audit, and acceptance by the state. The letter is required on competitive bid contracts and local agency force projects.

Construction — The building of a street, a portion of a street or a facility that did not previously exist. It may be on new right of way or on existing right of way.

Consultant — An individual, public or private organization or institution of higher learning having expertise in professional disciplines applicable to transportation programs.

Consultant Service — Utilization of professional expertise external to an agency, on a contract basis, to perform a specific study, project, or task. Does not include personal-service contracts for routine, continuing, and necessary tasks.

Continuous Counter — An automatic traffic recorder that operates continuously for all hours of a year.

Corridor Hearing — See location hearing.

Coverage Count — A traffic count taken as part of the requirement for system-level estimates of traffic. The count is typically short-term, and may be volume, classification, or weigh-in-motion.

DBE — Disadvantaged business enterprise, a small business concern: (a) which is at least 51 percent owned by one or more socially and economically disadvantaged individuals, or, in the case of any publicly-owned business, at least 51 percent of the stock of which is owned by one or more socially and economically disadvantaged individuals; and (b) whose management and daily business operations are controlled by one or more of the socially and economically disadvantaged individuals who own it.

Declaration of Non-significance (SEPA Document) — The written decision by the agency administrator that a proposal will not have a significant environmental impact and no EIS is required (WAC 197-11-340).

Declaration of Significance (SEPA Document) — The written decision by the agency administrator that a proposal could have significant adverse impact and, therefore, requires an EIS (WAC 197-11-340).

DEIS — Draft Environmental Impact Statement, a document identifying a course of action, alternative actions, analysis of the environmental impacts of alternates considered, and proposed mitigation of impacts. The DEIS is circulated to other agencies and the public for review and comment.

Design Hearing — A public hearing to examine the design features of a proposed transportation facility.

Design Report — A formal documentation of design considerations and conclusions reached in the development of a project. The design report is prepared to record the evaluations of the various disciplines which result in design recommendations. This report is then reviewed and, upon concurrence, results in approval of the design. For most projects, the Project Prospectus serves as the design report.

Determination of Value — The agency's approved fair market value of a right of way acquisition.

Deviation or Design Deviation — Departure from applicable design standards.

Discipline Report — A report documenting findings concerning impacts of a project relative to an individual area of expertise (e.g., botany, acoustics, sociology). The report evaluates the impacts of the proposal and, where appropriate, includes recommendations concerning the course of action considered most desirable to fulfill the requirements of environmental laws and regulations addressed by the discipline.

DNS — Declaration of Non-Significance (SEPA Document), the written decision by the agency administrator that a proposal will not have a significant environmental impact and no EIS is required (WAC) 197-11-340).

Draft Environmental Impact Statement (DEIS) — A document identifying a course of action, alternative actions, analysis of the environmental impacts of alternates considered, and proposed mitigation of impacts. The DEIS is circulated to other agencies and the public for review and comment.

EA — Environmental Assessment, a document prepared for federally funded, permitted, or licensed projects, that are not categorical exclusions (CE) but do not appear to be of sufficient magnitude to require an EIS. The EA provides sufficient analysis and documentation to determine if a Finding of No Significant Impact (FONSI) can be adopted or if an EIS must be prepared.

EAC — The Enhancement Advisory Committee sets criteria for projects to receive funding from the Surface Enhancements Program and advises WSDOT in project selection.

EEO — Equal Employment Opportunity. A general term referring to all contract provisions relative to EEO.

EIS — Environmental Impact Statement, a detailed written statement of project environmental effects required by state and/or federal law. This term refers to either a Draft or Final Environmental Impact Statement, or both, depending on context.

Environmental Checklist (SEPA Document) — A local agency document used to determine whether an action will significantly impact the environment. The checklist form contained in WAC 197-11-960 is used for all actions not categorically exempt or not clearly requiring an EIS.

Environmental Document — A term used for any document that identifies the social, economic, and environmental effects of a proposed action.

ER — Emergency Relief, a federal aid funding program administered by FHWA and WSDOT.

Fair Offer — An offer to acquire real property for just compensation, which is the approved appraisal of the property's fair market value.

Federal Aid Requirement Checklist — A list of requirements for acquiring right-of-way on federal aid projects.

Federal Aid Project Prospectus (WSDOT Form 140-009) — Page 1 is used for the FHWA federal aid programing purposes. Pages 2 and 3 give the state and FHWA additional information about the proposed project.

FEIS — Final Environmental Impact Statement, a document containing an evaluation of the course of action that an agency intends to follow. It contains the same information required for the DEIS, with appropriate revisions reflecting comments received from circulation of the DEIS and from public meetings.

Final Estimate — An estimate of the total cost of a project prepared after completion of the construction contract and used as the basis for final payment to the contractor.

Financial Responsibility Letter — A letter from the local agency approving authority advising the TransAid Engineer that a construction contract may be awarded and that the agency will arrange for project funding above the amount in the current Local Agency Agreement.

Flood Hazard — Construction affecting a flood-control zone, through flooding, erosion, or deposition of materials.

Flood Control Zone — A zone subject to flooding, as defined on maps available from the WSDOT Regional TransAid Engineer. FONSI — Finding of No Significant Impact, a federal lead-agency document presenting the reasons why a proposal will not significantly affect the environment and an EIS will not be prepared. The FONSI includes the EA and references any other related environmental documents.

Force-Account Work — Construction work not covered in the contract documents and of a type not amenable to definition by a change order. Force-account reimbursement is used when it is difficult to provide adequate measurement or to estimate the cost of certain items of work. The contractor is reimbursed for the cost of the work plus profit using established weighted wage rates, equipment-rental rates, and the invoice cost of materials.

Foreslopes — The roadway fill slope or ditch in slope.

Functional Classification — The roadway classifications referred to in this manual are the federal functional classifications shown on the official functional class maps prepared by the Planning and Programming Service Center of WSDOT. Examples: principal arterial, minor arterial, collector arterial.

Functional Classification — The grouping of streets and highways into classes, or systems, according to the character of service they are intended to provide. The recognition that individual roads do not serve travel independently and most travel involves movement through a network of roads is basic to functional classification.

Functional System — Highways of a similar type as determined by functional classification.

FTA — Federal Transit Administration (formerly the Urban Mass Transit Administration, UMTA).

GSP — General Special Provisions, construction contract specifications supplementing the Standard Specifications.

Hearing Summary — Summary of comments received from the hearings and those received from the evaluation of the DEIS.

Highway Traffic Data — Estimates of the amounts of person or vehicular travel, vehicle usage, or vehicle characteristics associated with a system of highways or with a particular location on a highway. These types of data include estimates of the number of vehicles traversing a section of highway or system of highways during a prescribed time period (traffic volume), the portion of such vehicles that may be of a particular type (vehicle classification), the weights of such vehicles including weight of each axle and associated distances between axles on a vehicle (vehicle weight), or the average number of persons being transported in a vehicle (vehicle occupancy).

HHS, HES — Hazard Elimination, a federal aid funding program administered by FHWA and WSDOT.

HOV — High-occupancy vehicle, e.g. bus, van, carpool.

IDT — Interdisciplinary Team, a team composed of appropriate disciplines that identifies and evaluates social, economic, and environmental impacts of proposed projects.

IISC — Institute ISTEA Steering Committee, the highest state policy committee which formulates ISTEA policy, consisting of eight public transportation bodies.

Improvement — Betterment in traffic service without major changes in the existing facility. This includes widening, signals, illumination, curbs, gutters, drainage, sidewalks, and other items which add value to the existing facility.

ISTEA — Intermodal Surface Transportation Efficiency Act of 1991.

Lead Agency — A federal, state, or local agency taking primary responsibility for preparing an environmental document.

Liquidated Damages — Amounts of money to be assessed against a contractor for late completion. These amounts must be related to the actual damages suffered by the owner because of the late completion.

Local Agency Agreement — An agreement to allocate federal funds to a transportation project. Negotiated between a local agency and WSDOT.

Local Agency, City/County, or Agency — Any municipal corporation within the state of Washington.

Local Match — That portion of a project's cost paid for with local agency funds.

Location Hearing — A public hearing to examine the location of a proposed transportation facility, also called corridor or route hearing.

LRP — Long-Range Plan is a 20-year forecast plan, now required at both the metropolitan and state levels, which must consider a wide range of social, environmental, energy, and economic factors in determining overall regional goals and how transportation can best meet these goals.

Maintenance — Work directed toward preservation of the existing roadway and related appurtenances as necessary for safe and efficient operation. Any surface treatments less than 18-mm (0.75-inch) thick crack sealing, etc. are considered to be maintenance and are not 3-R activities.

Matching Funds — See local match.

MPO — Metropolitan Planning Organization is the agency designated by the Governor (or governors in multistate areas) to administer the federally required trnasportation planning in a metropolitan area. An MPO must be in place in every urbanized area over 50,000 population. The MPO is responsible for the long-range plans and the transportation improvement program. The official name for an MPO may also be Council of Governments, Planning Association, Planning Authority, Regional or Area Planning Council, Regional or Area Planning Commission.

MUTCD — Manual on Uniform Traffic Control Devices for Streets and Highways, USDOT and FHWA.

MSA and CMSA — Metropolitan Statistical Area is the census classifications for areas having a population over 50,000. The MSA may contain several urbanized areas, but contains one or more central city or cities. When the commuting patterns of two MSAs have caused them to merge, the result is a Consolidated Metropolitan Statistical Area (CMSA).

NAAQS — National Ambient Air Quality Standards were set by the Environmental Protection Agency to define air pollution. EPS established NAAQS measures for six pollutants: carbon monoxide, ozone, particulate matter, lead, sulfur dioxide, and nitrous oxide.

Neighborhood — A secondary subdivision of a municipality, a portion of a community, considered as a unit for planning purposes.

New Construction — The building of a new roadway or structure on substantially new alignment, or the upgrading of an existing roadway or structure by the addition of one or more lanes. If 50 percent or more of the project length involves vertical or horizontal alignment changes, the project is new construction. The following types of projects are not classed as new construction, and the 3-R standards apply:

- Modernization of an existing street or road by resurfacing, widening lanes, adding shoulders, or adding turn lanes at intersections.

- Temporary replacement of a street or roadway, immediately after the occurence of a natural disaster or catastrophic failure, to restore the facility for the health, welfare, and safety of the public.

Nonparticipating Items — Items of project work that are not a part of the federal aid funding.

Notice of Intent — A federal notice, printed in the Federal Register, advising that an EIS will be prepared and considered for a proposal.

OA — Obligation Authority. Under ISTEA, it is vested with WSDOT except for STP funded projects within TMA boundaries.

Opportunity for Hearing — Soliciting public interest in holding a hearing by publishing notice.

PL — Public law, the designation for a law passed by the U.S. Congress before codification into the USC.

P&PSC — Planning and Programming Service Center. WSDOT's branch responsible for coordinating with local agencies on planning issues.

PONTIS — A bridge management system created cooperatively by FHWA, the state of California, and six "technical advisory" states. Meets ISTEA requirements.

Prequalifying Prospective Bidders — A process by which a contracting agency in advance of considering, opening, or accepting bids, or in advance of issuing bid proposals, establishes limitations on amounts and types of work contractors are permitted to bid on and to have underway at one time.

Progress Billing — A request from a local agency or contractor to WSDOT for state/federal reimbursement for work completed on a federal aid transportation project during a defined time period.

Progress Estimate — An estimate of the total amount of work completed by a contractor as of the estimate date listed by work item.

Progress Payment — A payment by a public agency to a consultant or construction contractor for work completed on a federal aid transportation project during a defined time period.

Project — An undertaking to construct.

Project Application Checklist.

Project Engineer — The person designated by a local agency to oversee development of a project.

Project Management Review (PMR) — A review of an agency's project administration conducted by the WSDOT TransAid Operations personnel.

Project Prospectus — A document prepared by a local agency and submitted to WSDOT describing a proposed transportation project. Used to support authorization of federal funds.

Proprietary Specifications — Those referring to specific products by trade name and model.

Proximity Damages — An element of severance damages caused by the proximity of the remainder of a land parcel to the improvement being constructed, such as a highway. It may also arise from proximity to an objectionable site or improvement, or from all causes such as dirt, noise, or vibration.

Public Involvement Plan — A required, integral part of an environmental study plan which outlines procedures for presenting information to the public, obtaining public comment, and considering public opinion.

Quad County (Quad-Co) — A Regional Transportation Planning Organization that includes Adams, Grant, Kittitas, and Lincoln Counties.

Qualifying Low Bidders — A process by which a contracting agency proceeds, after bid opening, to consider the qualifications of the apparent low bidder to perform the work.

Record of Decision — A document prepared by the federal lead agency, after an EIS has been completed, outlining the final decision on a proposal. It identifies the decision, alternatives considered, and measures to minimize harm; and it outlines a monitoring or enforcement program.

Regional Administrator — The Engineer in charge of each of the six transportation regions in the state.

Regional Representative — A designee of the Regional Administrator responsible for WSDOT monitoring of a federally-assisted local agency project.

Regional TransAid Engineer — The region's designated representative for local agency and WSDOT liaison.

Rehabilitation — Similar to "Restoration'' except the work may include reworking or strengthening the base or subbase, recycling or reworking existing materials to improve their structural integrity, adding underdrains, improving or widening shoulders. Rehabilitation may include acquisition of additional right of way.

Relocation Plan — A plan for relocating persons and personal property displaced by public projects.

Remainder — The portion of a land parcel not acquired for public right-of-way.

Repair — Replacement or rebuilding of a facility which is worn out, destroyed, or damaged. Repair includes overlays 18-mm (0.75-inch) thick or thicker. Crushed surfacing placed to 18-mm (0.75-inch) thick or thicker and covering more than 10 percent of the original surface area may be considered repair.

Restoration — Work performed on pavement or bridge decks to render them suitable for resurfacing. This may include supplementing the existing roadway by increasing surfacing and paving courses to provide structural capability, and widening up to a total of 3 meters (10 feet). Restoration will generally be performed within the existing right-of-way.

Resurfacing — The addition of a layer or layers of paving material to provide additional structural integrity, improved serviceability, and rideability.

Right-of-Way Certification — A letter from a local agency to the TransAid Engineer certifying that right of way has been acquired in accordance with federal regulations.

Right-of-Way Project Analysis — WSDOT Form 262-060 required on all federal aid projects as part of the R/W Certification.

Roadway Width — The portion of a street or road, between curbs or including shoulders, intended for vehicular use. This definition is for use in Design Standards only.

ROD — Record of Decision, a document prepared by the federal lead agency, after an EIS has been completed, outlining the final decision on a proposal. It identifies the decision, alternatives considered, and measures to minimize harm; and it outlines a monitoring or enforcement program.

Route Hearing — See location hearing.

RRP, RRS — Railway-Highway Grade Crossing, a federal aid funding program administered by FHWA and WSDOT.

Rural Area — Any land area outside the boundaries of the federally-designated urban areas as shown on the official urban area maps on file at WSDOT.

Scoping — A process for identifying issues and alternatives for an EIS.

Section 4(F) Evaluation — A document presenting the consideration, consultations, mitigative measures, and alternatives studied for the use of properties identified in Section 4(F) of the U.S. Department of Transportation Act as amended (49 USC 1653H).

Section 4(F) Lands — Generally, public parks, recreation areas, wildlife refuges, and historic sites.

See Effects — Social, economic, and environmental effects.

SEPA Checklist — See "environmental checklist."

Severance Damages — The reduction of the market value of a remaining area because of a partial acquisition of property or property rights (damage to the remainder). See also proximity damages.

Shoreline Management — See Coastal Zone Management.

Six-Year Road or Street Program — See TIP.

Small Business Concern — A small business as defined according to Section 3 of the Small Business Act and other relevant regulations.

Small Purchase Procedures — Procedures to utilize external personal service or equipment rental for routine, continuing, and necessary tasks.

Socially And Economically Disadvantaged Individuals — Black Americans, Hispanic Americans, Native Americans, Asian-Pacific Americans, Asian-Indian Americans, and any other minorities or individuals found to be disadvantaged by the Small Business Administration pursuant to Section 8(a) of the Small Business Act. These individuals must be U.S. citizens or lawfully admitted permanent residents.

Special Provisions — A portion of the construction contract specifications separate from the General Provisions and covering conditions unique to a specific project.

Standard Specifications — Sets of typical construction contract specifications.

Stipulated Settlement — Final settlement of a right of way acquisition case through the acquiring agency's attorney that is stipulated (agreed to) by the property owner and any other interested parties prior to trial, and evidenced by a stipulated Judgment and Decree of Appropriation being filed in the superior court having jurisdiction.

Study Plan — An outline of the study process for the development of a project requiring an environmental impact statement.

Surety — A bonding company, for example.

Surfaced Width — The portion of a street or road for use by moving vehicles, between curbs or shoulders, including turning lanes where such lanes are appropriate, but excluding parking lanes and/or shoulders.

TCM — Transportation Control Measures are implemented to enable nonattainment areas meet their emissions goals. They can include Transportation Demand Management measures, parking policies and pricing, or other system improvements which reduce congestion.

TDM — Transportation Demand Management measures try to reduce the proportion of SOV commuters. TDM measures can include portion of non-SOV modes of transportation, car and vanpool formation assistance, transit subsidies, and a variety of other measures.

Tied Bids — The practice of letting a single construction contract for two or more projects. Usually done to take advantage of economies of scale, such as more favorable unit prices for larger quantities of material.

TIP — Transportation Improvement Program is a three-year transportation investment strategy, required at the metropolitan level, and a two-year program at the state level, which addresses the goals of the long-range plans and lists priority projects and activities for the region. (At the state level, the TIP is also known as a STIP, not to be confused with a SIP.)

TMA — Transportation Management Areas. Any area over 200,000 population is automatically a Transportation Management Area, which subjects it to additional planning requirements but also entitles it to earmarked funds for large, urbanized areas under the Surface Transportation Program. There are three TMAs: PSRC, SWRTC, and SRTC.

Traffic Data Collection Session — The collection of highway traffic data for a defined period of time at a specific highway location.

Traffic Monitoring Guide (TMG) — The FHWA's statement of good traffic monitoring practices. The TMG describes the number and duration of traffic data collection sessions and the adjustments that need to be made to the collected data in order to develop location or system level estimates of the average traffic volume. The TMG also describes vehicle classification and truck weight data collection programs.

Tri-County (Tri-Co) — A Regional Transportation Planning Organization that includes Ferry, Stevens, and Pend Orielle Counties.

True Cost Estimate — The most refined estimate of all acquisition costs of all parcels within a project.

TS&L — The type, size, and location stage of design development of bridges. A specific report (TS&L Report) which must be prepared on major or unusual bridges.

Urbanized Area — An area with a population over 50,000 within boundaries established by the U.S. Census Bureau or by responsible state and local officials in cooperation with each other. There are nine in Washington: Seattle-Everett, Tacoma, Yakima, Spokane, Vancouver, Tri-Cities, Bellingham, Olympia-Lacey-Tumwater, and Kelso-Longview.

Urban Area — Any land area within the boundaries of the federally-designated urban areas (population over 5,000) as shown on the official urban-area maps on file at WSDOT.

UZA — Urbanized Area is a census classification for areas having a population of 5,000 or more which meet certain population density requirements.

Walkway — A continuous way designated for pedestrians and separated from through lanes for motor vehicles by a curb, space, pavement marking, or other barrier.

Wetlands — Lands covered by shallow water or lands where the water table is at or near the surface; includes marshes, swamps, bogs, natural ponds, wet meadows and river overflow.

Withholding Resolution — A resolution passed by the local agency legislative body authorizing WSDOT to withhold a portion of the agency's fuel-tax allotment to pay for a transportation project being administered by the state. WOAP — Work Order Accounting Plan.

4.61 Percent Program — "1/2¢ Gas Tax," "Arterial Fund."

6.92 Percent Program — "Gas Tax," "Road" or "Street Fund" (formerly 6-7/8¢ Program).

2:P:LAG7

Index

Description

Acceptance Samples and Tests — 52.3, 52.8
Acquisition Process — 25.02, 25.03, 25.04
(a) Appraisal — 25.05
(b) Appraisal Review — 25.05
(c) Title Evidence — 25.06
(d) Negotiations — 25.07
(e) Administrative Settlement — 25.09
(f) Relocation Assistance — 25.10
Acquiring Right-of-Way — 25.02, 25.03, 25.04
Acquisition Procedures — 25.02
Addenda, Local Ad and Award — 46
Administrative Settlements — 25.09
Administrative Settlement Costs Under Local Ad and Award — 52
Affidavit of Amounts Paid DBE Participants (WSDOT Form 140-542) — 26, 52
Affidavit of Wages Paid (Form LI-700-7) — 52
Affirmative Action — 27
Agency-Provided Materials Sources — 52, 61
Agreement for Aid — Appendix 25.74
Allowable Costs — 23
Allowable Other Costs Subject to FHWA's Approval — 23
Amendment to the Annual Element — 12
Annual Element and WIRP Procedures:
(a) Approval and Project Initiation — 12, 21
(b) For Local Agencies Inside an Urbanized Area — 12
(c) For Local Agencies Outside the Urbanized Area — 12
Appraisal — 25
(a) Certificate of Appraiser — Appendix 25.145, 25.146, 25.147
(b) Personal Service Contract for Appraiser — 31
(c) Appraisal Report Forms, Sample — Appendix 25.146
(d) Review Appraiser Form, Sample — Appendix 25.147
Appraiser Qualifications — 25.05
Audit:
(a) By State Auditor — 53.41
(b) By WSDOT — 53.42
(c) Project Records — 53.3
(d) Report — 53.44
Award of Contract, Local Ad and Award — 46

Bid Opening, Local Ad and Award — 46
Bidding Procedures Local Ad and Award — 46
Billing Procedures:
(a) For PE, R/W, Local Ad and Award Construction and Agency Force Work — 23
(b) For State Ad and Award Construction — 23
BRAC Technical Committee — 34.3
Bridge Condition Unit — 34
Bridge Design Approval:
(a) Definitions — 43
(b) "Major and Unusual" Bridges, Type, Size, and Location (TS&L) — 34.42, 43
(c) Policy — 43
(d) Submittal of Data — 43

Description

Bridge Inspections:
(a) Administrator Qualifications — 64
Bridge Management System (BMS) — 12.13, 65
Bridge Replacement Advisory Committee — 34.3
Bridge Replacement and Rehabilitation Program (BR, BRM, BROS, BRS) — 12.32, 34, 64
Buy America Requirements — 44

C3R Review — 34.41, Appendix 34.61
Categorical Exclusion — NEPA/Categorical Exemption — SEPA (CE) Class II — 24
Certificate of Appraiser — 25.05
Certification Acceptance (CA):
(a) Application — 13.4
(b) Compliance — 13.5
(c) Features — 13.2
(d) Qualification Agreement — Appendix 13.61
(e) Requirements — 13.3
Certification Sample — All Right-of-Way Acquired — Appendix 25.149
Certification Sample — Right to Occupy all Right-of-Way Acquired — Appendix 25.150
Certification Sample — All Right-of-Way Not Acquired — Appendix 25.151
Certificate of Current Cost or Price Data — 31
Certified to Administer Federal Aid Projects — 13
Change Order:
(a) Local Agency (WSDOT Form 140-005) — Forms, 52
(b) Sample (WSDOT Form 421-005) — Forms, 52
Changes and Extra Work:
(a) Local Ad and Award — 52
(b) State Ad and Award — 51
Checklists:
(a) Documentation Review — Appendix 53.51
(b) Environmental Process Class III, Environmental Assessment (EA) NEPA/SEPA — 24
(c) Project Application Checklist — Appendix 21.31
(d) Project Development — Appendix 14.52
(f) Request for Concurrence to Award — 45, 46
City/County Design Standards — 42
City Letter of Financial Responsibility, Sample — 51
Coast Guard Permit — 24
Coast Zone Management Program — 24
Collector Streets, New Construction — 42
Commitment File, Environmental Process — 24
Commitments File, P,S&E — 53
Completion Letter — 53
Completion of Construction, Local Ad and Award — 52
Compliance with Federal Contract Provision, Local Ad and Award — 44
Concurrence to Award — 45, 46
Condition of Award Letter, Sample — 26, 52
Congestion Management System — 12.13, 65
Construction Administration Under Local Ad and Award — 52
Construction Administration Under Local Force Work — 61
Construction Administration Under State Advertising and Award — 51
Construction Contract Administration — 52
Consultants — General Discussion — 31
Consultant Agreement — Forms, 31

Description

Contract:
(a) Bond, Local Ad and Award — 46
(b) Compliance On-Site Review — 52
(c) Numbers — 22, 46
(d) Plans — 44
(e) Sample — 45
Contractor's Annual EEO Report (FHWA Form 1391) — 27
Coordinating Transportation Programs With Planning Agencies — 12
Council on Environmental Quality (CEQ) — 24
County Letter of Financial Responsibility, Sample — 45

Damage Survey Report, Preparation — 33
Department of Community Development (DCD) — 12
Design Approval — 43
Design Details for New Urban and Rural Construction — Appendix 42.31
Design Hearing: — 43
Design Report — 43
Design Standards for 3-R Projects — Appendix 42.31
Developing Projects Using the Local Agency Guidelines — 14
Deviation Analysis Format — 42
Disadvantaged Business Enterprises (DBE) — 26, 52
Disaster Analysis Report — 33
Discipline Report — 43
District Advertising and Award — 45
District Clearinghouse Map —
Documentation Required for Authorization of Funds — 21-23
Documentation for Right-of-Way — 25.6
Donation Statement, Sample — 25
Draft Environmental Impact Statement (DEIS) — 24

EIS Outline (M 31-11) — 24
Emergency Relief Program (ER) — 33
Emergency Relief (ER) — 12.33, 33
Enhancement Advisory Committee (EAC) — 12.31
Enhancement Funds — 12.3, 62
Environmental Process — 24
Employment Opportunity (EEO) and Training — 27
Estimate, Sample — 44
Evaluation of Bids for Local Ad and Award — 46
Examples of Participating and Nonparticipating Costs — 46
External Civil Rights — WSDOT — 26, 27
External Funding Sources for Local Projects — 12

Fair Offer — 25
Federal Emergency Management Agency (FEMA) — 33
Federal Aid Highway Construction Annual Project Training Report (WSDOT Form 272-060A) — 27
Federal Aid Highway Construction Cumulative Training Report (WSDOT Form 272-061A) — 27
Federal Aid Requirement Checklist — 21.31
FHWA Form — Forms
(a) 1273, Required Contract Provisions, Federal Aid Construction —
(b) 1392, Summary of Employee Data for the Month Ending July 31 —
(c) 45, Bid Price Data —
FHWA Funding Programs — 12

Description

Final Billing — 23, 53
Final Environmental Impact Statement (FEIS) — 24
Final Estimate — 53
Final Records — 53
Final Section 4(f) Evaluation — 24
Finding of No Significant Impact (FONSI) — 24
Flood Control Zone — 24
Flow Charts:
(a) Emergency Relief Program — 33
(b) For Environmental Process — 24
(c) Project Development — 14
(d) Railway/Highway Grade Crossing Project Development — 32
Fracture Critical Inspection — 64
Functional Classification — 12
Fund Authorization, Local Force Project — 22
Funds, Matching — 12

Growth Management Act (GMA) — 12.26

Hazard Elimination Program (HES & HHS) — 12
Headquarters Advertising and Award — 45
Hearing Opportunity, Procedures for — 24

Identification of Federal Aid Participating and Nonparticipating Charges — 23
Incident Report — 33
Independent Assurance Samples — 52
Instructions for Completing Form PPC2 — 23
Interdisciplinary Team (IDT) — 34
Intermodal Transportation Facilities and Systems (IMS) n— 12.13, 65
Invoice Form PPC2, “Federal-aid Request for Payment” — 23, Forms

List of City Code Numbers — 21
List of County Code Numbers and WSDOT Region Numbers — 21
List of Forms — Forms
List of Urban Area Numbers — 22
Load Ratings, Bridges — 34, 42, 64
Lobbying:
(a) Certification Regarding the Restrictions of the Use of Federal Funds — 12, 31, 44, Forms
(b) Disclosure of Lobbying Activities — 31, 44, Forms
Local Ad and Award Procedures — 46
(a) Advertising of Project
(b) Award of Contract
(c) Bid Opening
(d) Bidding Procedures
(e) DBE Goals in Selecting Successful Bidder
(f) Evaluation Bids for Award
(g) Execution of Contract
(h) Federal Form 45
(i) General Discussion
(j) Notice to Contractors Availability
(k) On-Site PS&E Review
(l) Preparation of Project Proposal
(m) Prequalification of Prospective Bidders
(n) Procedures
(o) Tied Bids
(p) Submittal of Award Data to WSDOT

Description

Local Agency Agreement — 22
Local Agency Documentation Review Checklist — 53
Local Agency Force Report — 61
(a) Checklist
(b) Construction Administration:
— General Discussion
— Preconstruction Conference
— Quality Control
— Progress Billing
— Changes and Extra Work
— Completion of Construction
(c) Contract Number
(d) Fund Authorization
(e) General Discussion
(f) Preconstruction Conference Agenda
(g) Project by One Agency for Another Agency
(h) PS&E Approval
(i) PS&E Requirements:
— Commitments
— Traffic Control Plans
— Agency Provided Material
— Agency Provided Material Sources
— Plans
— Specifications
— Estimates
Local Agency Procedure Review Questions, Typical — 53
Local Agency Railroad Agreement, Standard —
Location and Design Approval — 43
(a) General Discussion
(b) Location Hearing
(c) Notice of Approval of, Sample

Maintenance — 65
Major Bridge Repair Report — 34, 64
Management Systems — 12.13, 65
Master List — 64
Materials Certification to Approving Authority, Sample — 52
Metropolitan Planning Organization (MPO) — 12.12, 12.23, 12.24
Minimal Value Appraisal Report — 25
Minimum Roadway Design Standards for All Classes, New Construction — 42
Minority Affairs Office (WSDOT) — 26
Monthly Employment Utilization Report (USDOL CC257) — 27, 52
Monthly Employment Utilization Report Worksheet — 27, 52

National Highway System (NHS) — 12.11, 63
National Historic Preservation Act — 24
Non-NHS Funds — 12.3
Notice to Contractors, Sample — 46
Notice to Contractors, Submittal — 46

Office of Minority and Women Business Enterprise, Washington State — 26
OMB Circular A-102 Attachment “O,” 23
OMB Circular A-95 — 23
Opportunity for Hearing — 24
Opportunity for Public Hearing, Environmental Processes — 24
Other Agreements, Permits, and Interagency Coordination — 24

Description

Participating Functions — 23
Participating and Nonparticipating Project Costs, Summary — 23
Pavement Management System (PMS) — 12.13, 65
Personal Services Contract for Appraiser — 31
Phases of Authorization — 14
Plans, Specifications, and Estimates (PS&E) — 44
PPC2 Billing Form — 23
Preconstruction Conference — 52
(a) Agenda
(b) Minutes
Preliminary Damage Assessment (PDA) — 33
Prenegotiation Audit — 31
Prequalifying Prospective Bidders — 46
Principal Arterial, New Construction — Appendix 42.31
Procedures for Local Ad and Award — 42
Procedures for Projects With No Right-of-Way Acquisition — 25
Procedures for Projects With Right-of-Way Acquisition by WSDOT — 25
Procedures for Right-of-Way Acquisition — 25
Progress Billing — 23
(a) General Discussion
(b) Identification of Federal Aid Participating and Nonparticipating Charges
(c) Numbering and Timing of Submittals
(d) Procedures for P.E., R/W, and Local Agency Ad-and-Award Construction
(e) Procedures for State Ad and Award Construction
Progress Payments, Local Ad and Award — 23, 53
(a) General
(b) Affidavits
Project Advertising, Local Ad and Award — 46
Project Analysis, R/W — 25
Project Application Checklist — 21
(a) Appendix
(b) Instructions to Prepare
(c) Procedures for Compiling
Project Proposal — 46
Project Prospectus:
(a) General Discussion — 21
Projects with Railroad Involvement — 32
(a) General Discussion
(b) Procedures for Securing Railroad Agreement
Property Management — 25.62
Propriety Specifications — 44
Proximity Damages — 25
PS&E Approval, Local Force Project — 44
PS&E Requirements — 44
(a) For all Competitive-Bid Projects
— Affirmative Action
— “Buy America” Requirement
— Commitments — 24, 53
— DBE — 24
— FHWA Form PR-1273 “Required Contract Provisions Federal Aid Construction Contracts — Forms, 44
— Traffic Control Plans — 44
— Wage Rates — 44
(b) Local Ad and Award Projects — 46
— Notice to Contractors — 46
— On-Site PS&E Review —
— Project Proposal — 44
— PS&E Copies Required — 45

Description

(c) Local Agency Force Projects:
— Agency-Provided Material — 61
— Agency-Provided Material Sources — 46, 61
— Commitments — 24, 25, 53
— Estimates — 44
— Plans — 44
— Specifications — 44
— Traffic Control Plans — 44
(d) State Ad and Award Projects — 45
— On-Site PS&E Review — 45
— PS&E Submittal — 45
Public Hearing Requirements, Environmental — 24
Public Hearing — 24
Public Involvement Plan — 24
Public Transportation Facilities and Equipment — 12.13, 65

Quality Assurance Reviews — 53
Quality Control, Local Ad and Award — 52

Railroad Contact Persons — 32
Railway Crossing, Selection of Appropriate Warning Devices — 32
Railway Crossing, Signal Design Curb Section Elevation View — 32
Railway Crossing, Signal Design Shoulder Section Elevation View — 32
Railway/Highway Grade Crossing Program (RRP & RRS) — 12, 32
Railway/Highway Grade Crossing Project — 12, 32
(a) General Discussion
(b) General Guidelines for
(c) Project Development Process:
— Construction Authorization
— Construction and Project Closure
— Project Application Package
— Preparation of Project Data
(d) Project Development Flow Chart — 32
(e) Protection Device Checklist — 32
(f) Railroad Agreement and Petition — 32
(g) Standard Agreement — 32
Railway Project Data Form — 32
Record of Decision (ROD) — 24
Record of Material Samples and Tests — 52
Regional Competitive Funds — 12.3
Regional Transportation Planning Organizations (RTPOs) — 12.2, 12.26
Rehabilitation, Glossary — 12
Reimbursement for Railroad Work — 32
Relocation Assistance — 25
Relocation Procedures, Sample — 25
Requesting WSDOT Approval of Right-of-Way Acquisition Procedures — 25
Required Contract Provisions, Federal Aid Construction (FHWA Form PR-1273) — Forms, 44
Retention of Project Files — 53
Review Appraiser Report, Sample — 25
Right-of-Way — 25
Rural Design Standards — 42
Rural Major and Minor Collectors — 42
(a) ADT Under 400, New Construction
(b) ADT 400-2,000, New Construction
(c) ADT Over 2,000, New Construction
Rural Roadway Design Standards for All Classes, Minimum for New Construction — 42

Description

Safety Checklist — 42
Safety Program — 12.31 e
Sample Deviation Analysis Format — 42, 43
Scoping — 24
Section 4(f) — 24
Severage Damages, Glossary — 24
Shoreline Management — 24
Socially and Economically Disadvantaged Individuals Glossary — 26
Specifications — 44, 45, 51, 52
(a) Standard Specifications
(b) Amendments to Standard Specifications
(c) General Special Provisions
(d) APWA Amendments
(e) Special Provisions
(f) Special Items
Standards for Selected Items of Costs — 23
State Ad and Award — 45
(a) General Discussion
(b) On-Site PS&E Review
(c) Procedures:
— WSDOT Service Center Advertising and Award
— Region Advertising and Award
(d) Submittals:
— Award Data to WSDOT
State Environmental Policy Act (SEPA) — 24
State of Washington Inventory of Bridges and Structures (SWIBS) — 34
Statement of Intent to Pay Prevailing Wages (Form LI 700-29) — 44, 52
Statewide Competitive Funds — 12.3
Statewide Transportation Improvement Program (STIP) — 12.2, 14.22
Stipulated Settlement — 25, 52
Study Plan — 24
Submittal of State Ad and Award — 44, 45
Sufficiency Ratings, Bridge — 34, 64
Summary of Employee Data for the Month Ending July 31 (FHWA Form 1392) — Forms, 44
Supplement Consultant Agreement With Required Exhibits — Forms, 31
Supplement to Local Agency Agreement — Forms, 22
Surety, Glossary — 45, 46
Surface Transportation Program (STP) — 12.11, 12.3

Three-R Rural Projects — 42
Tied Bids, Local Ad and Award — 44
Topics of Interagency Coordination — 24, 43
Traffic Control Plans — 44
Traffic Monitoring System (TMS) — 12.13
Training Questionnaire — 27, 52
Transportation Improvement Program (TIP) — 12.25, 12.26, 14.22
Transportation Management Areas (TMAs) — 12.12, 12.2
True Cost Estimate, Sample —
Type, Size, and Location (TS&L) — 34, 42

Description

UBIT Inspections — 34, 64
Unallowable Costs — 23
Underwater Inspections — 64
Urban Collectors — 42
Urban Design Standards — Appendix 42.31
Utility Relocations, Adjustments, and Reimbursement — 23

Value Engineering — 34, 42, 43

Wage Rate Request Form — 44
Washington Department of Community Development/Division of Emergency Management (DEM) — 33
Wetlands, Glossary — 24
Withholding Resolution for Construction Financing Method B — 12
Work Order Accounting Plan (WOAP) — 23
WSDOT's DBE Plan — 26

3:P:LAG7