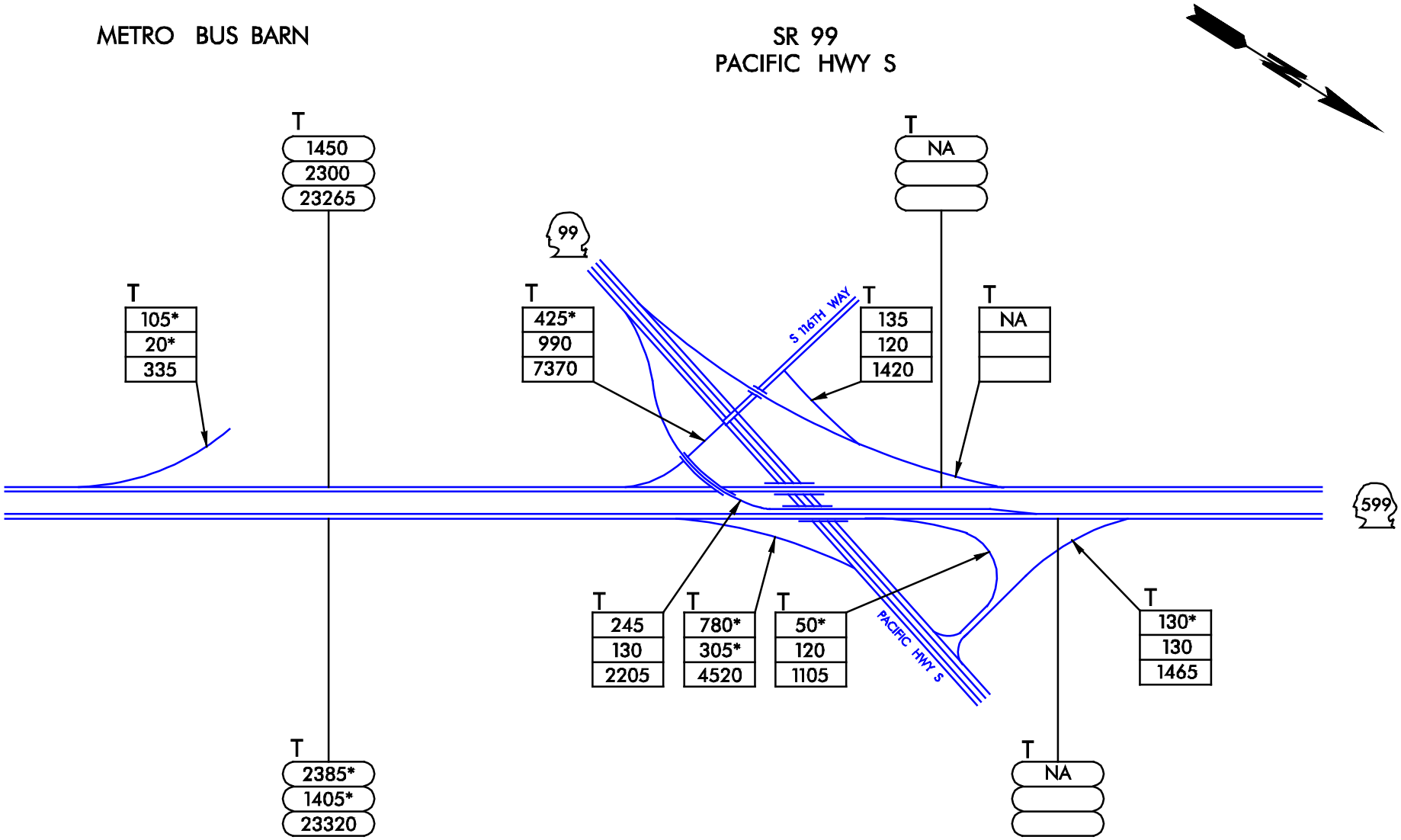

Department of Transportation

599

2 OF 2