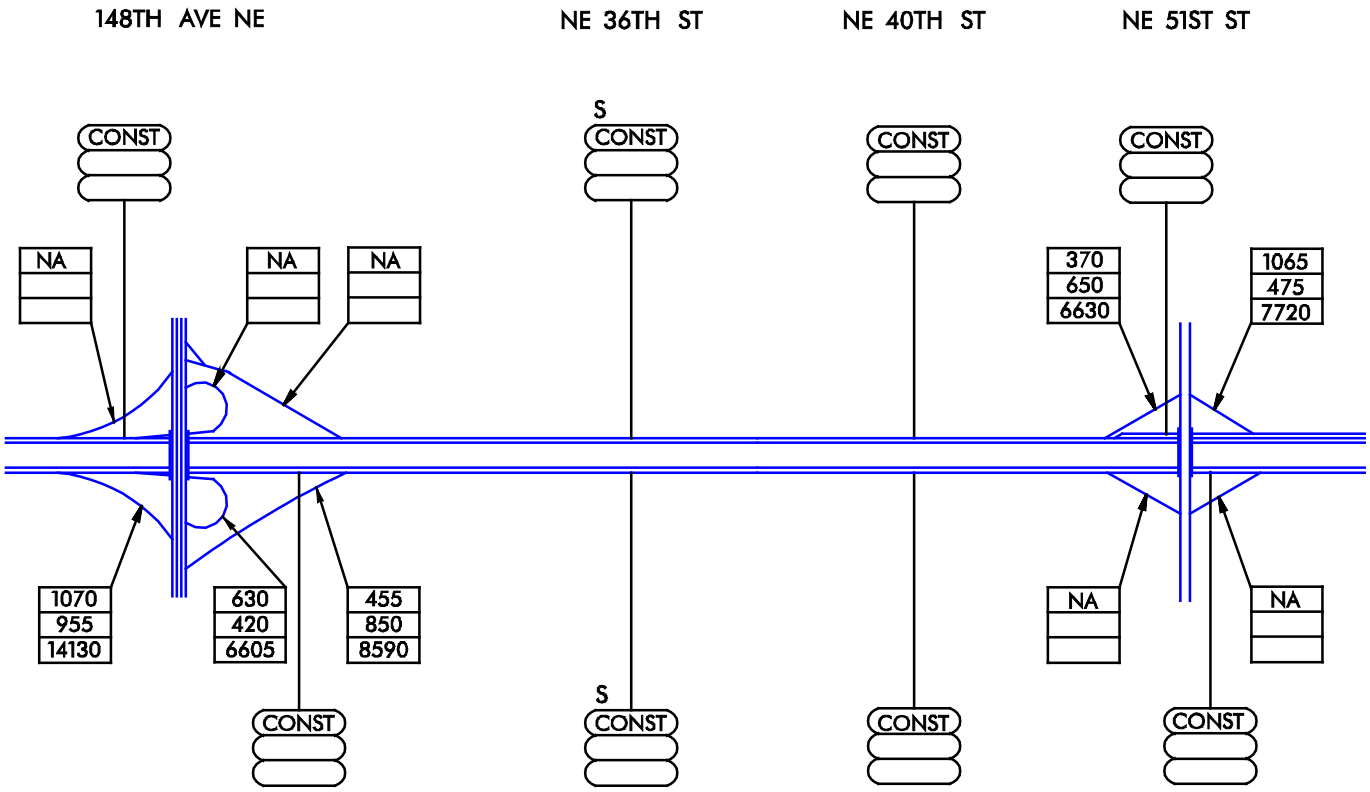

Washington State Department of Transportation

520