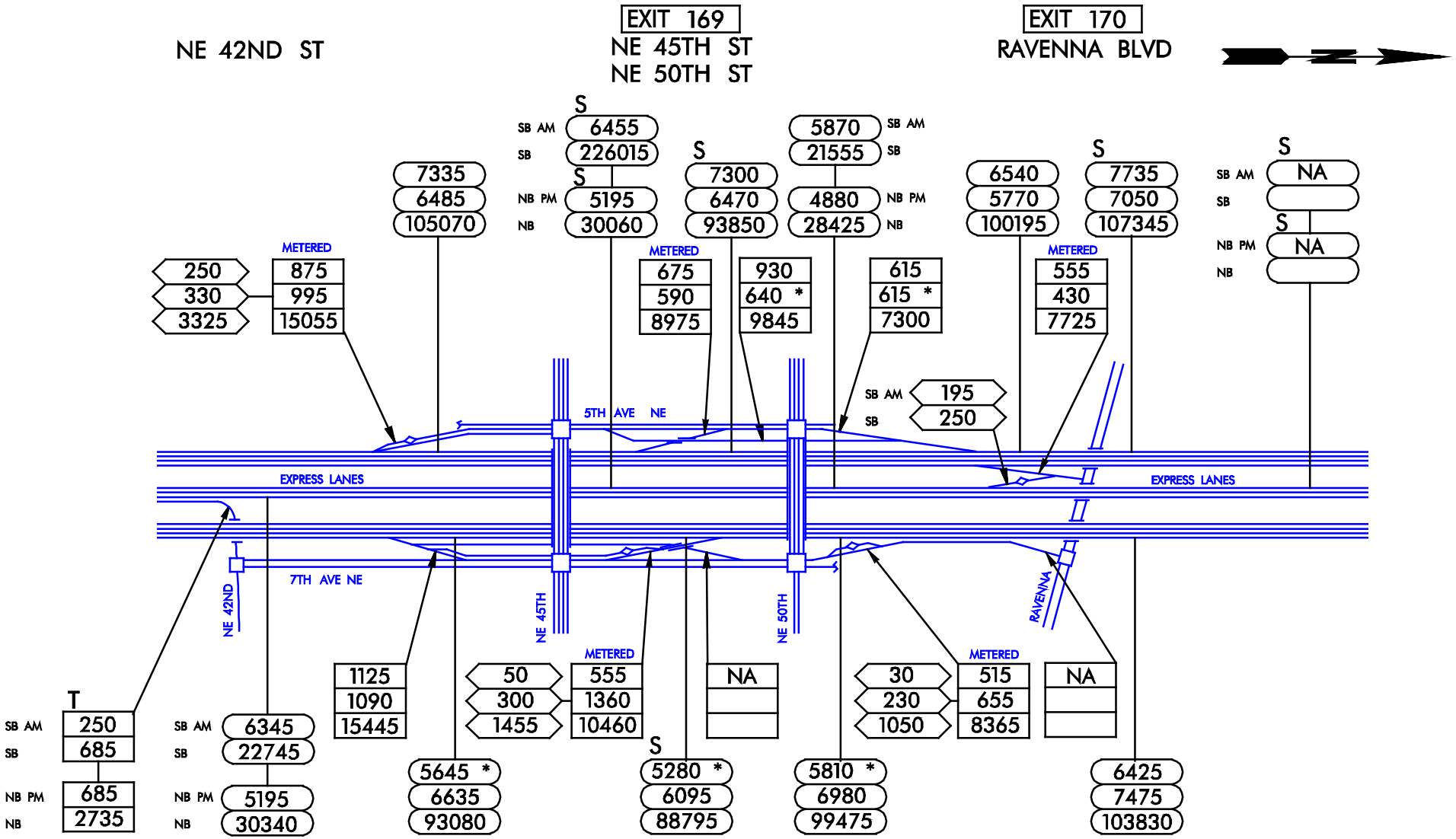

Washington State Department of Transportation

5

13 OF 23

...\cad files\i5_13-23.dgn Dec. 22, 1998 16:44:05