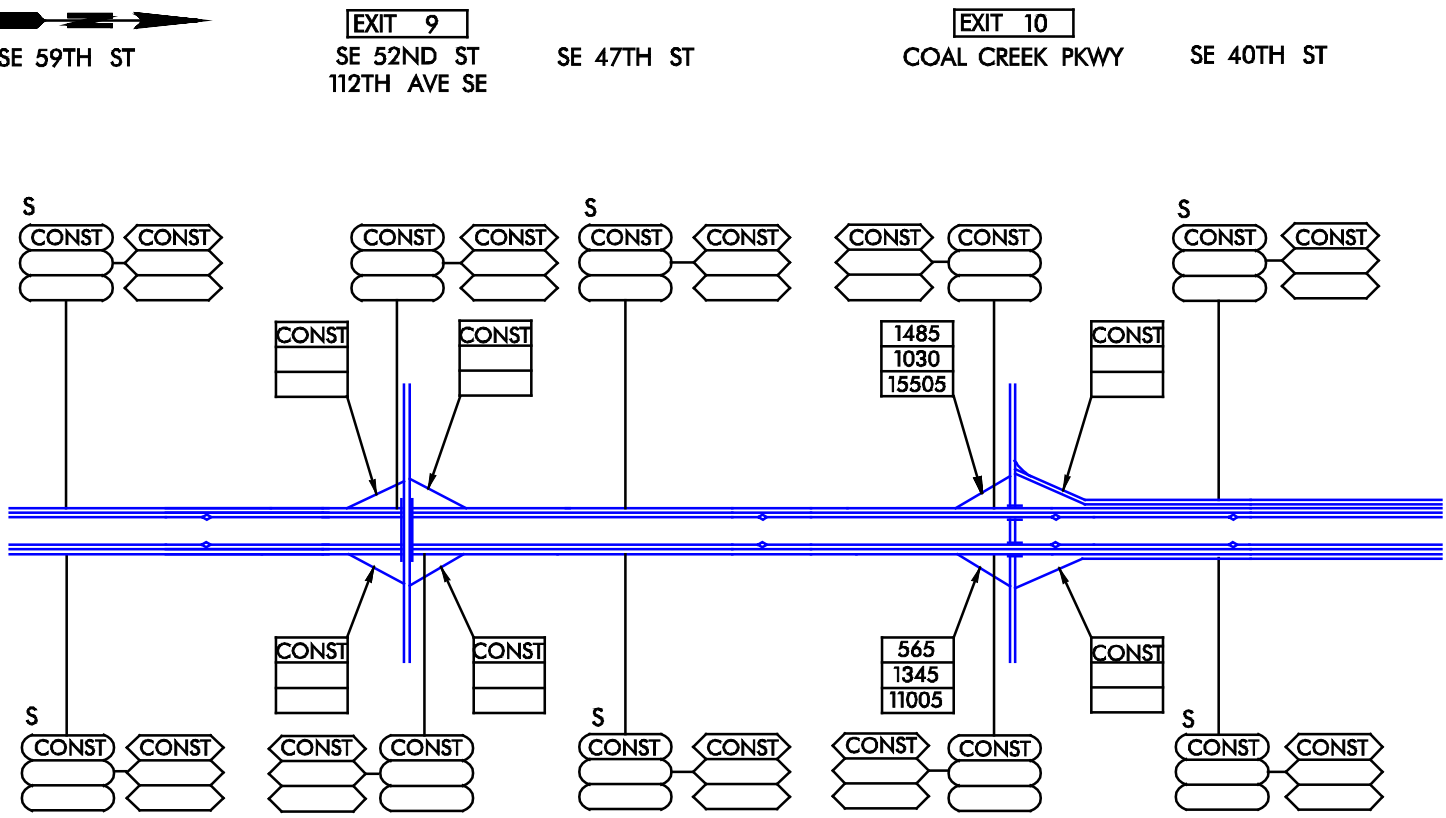

Washington State Department of Transportation

405