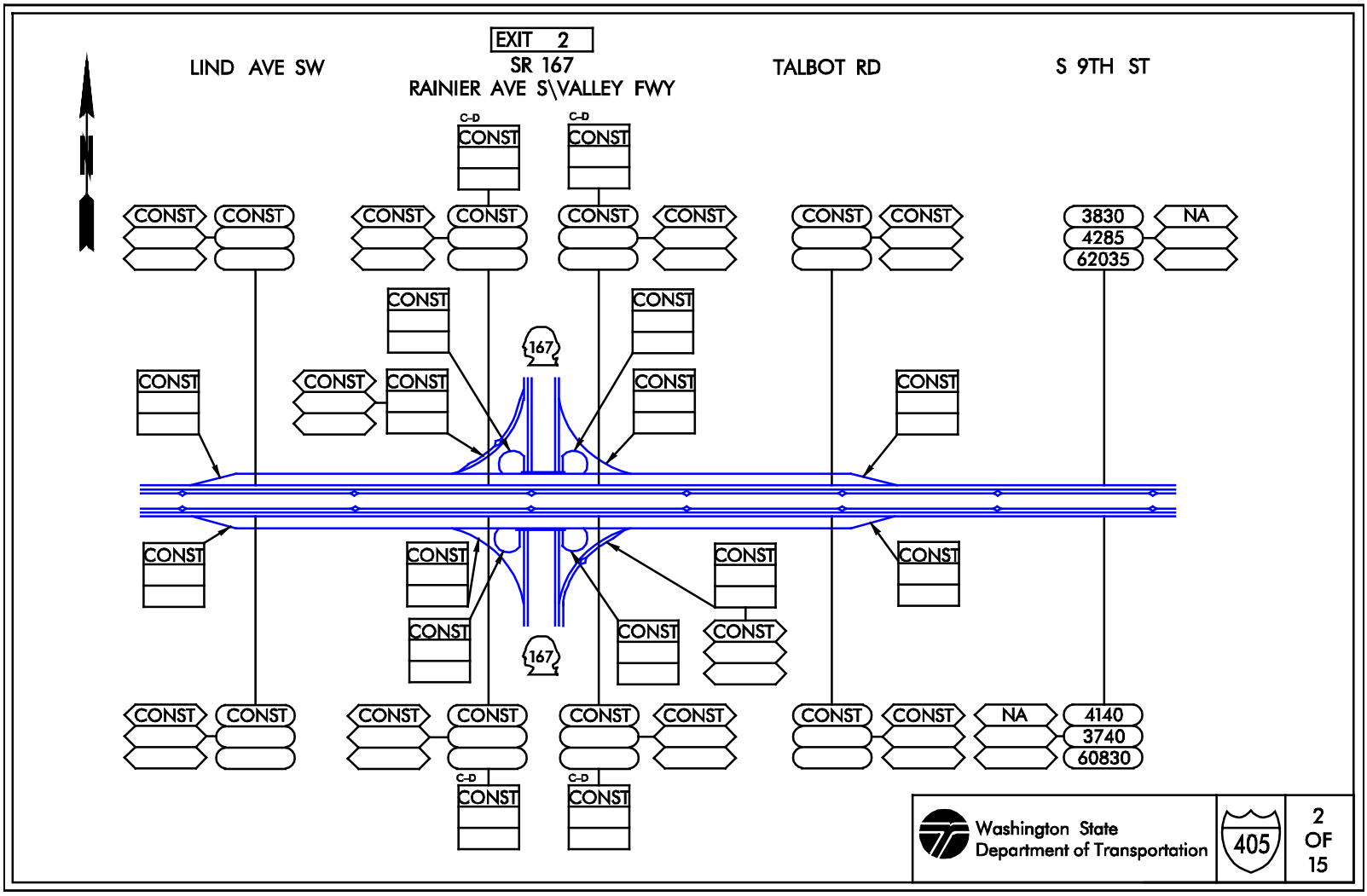
EXIT 2
LIND AVE SW
SR 167
RAINIER AVE S\VALLEY FWY
TALBOT RD
S 9TH ST
N
C-D
CONST
3830
4285
62035
NA
167
4140
3740
60830
Washington State
Department of Transportation
405
2
OF
15