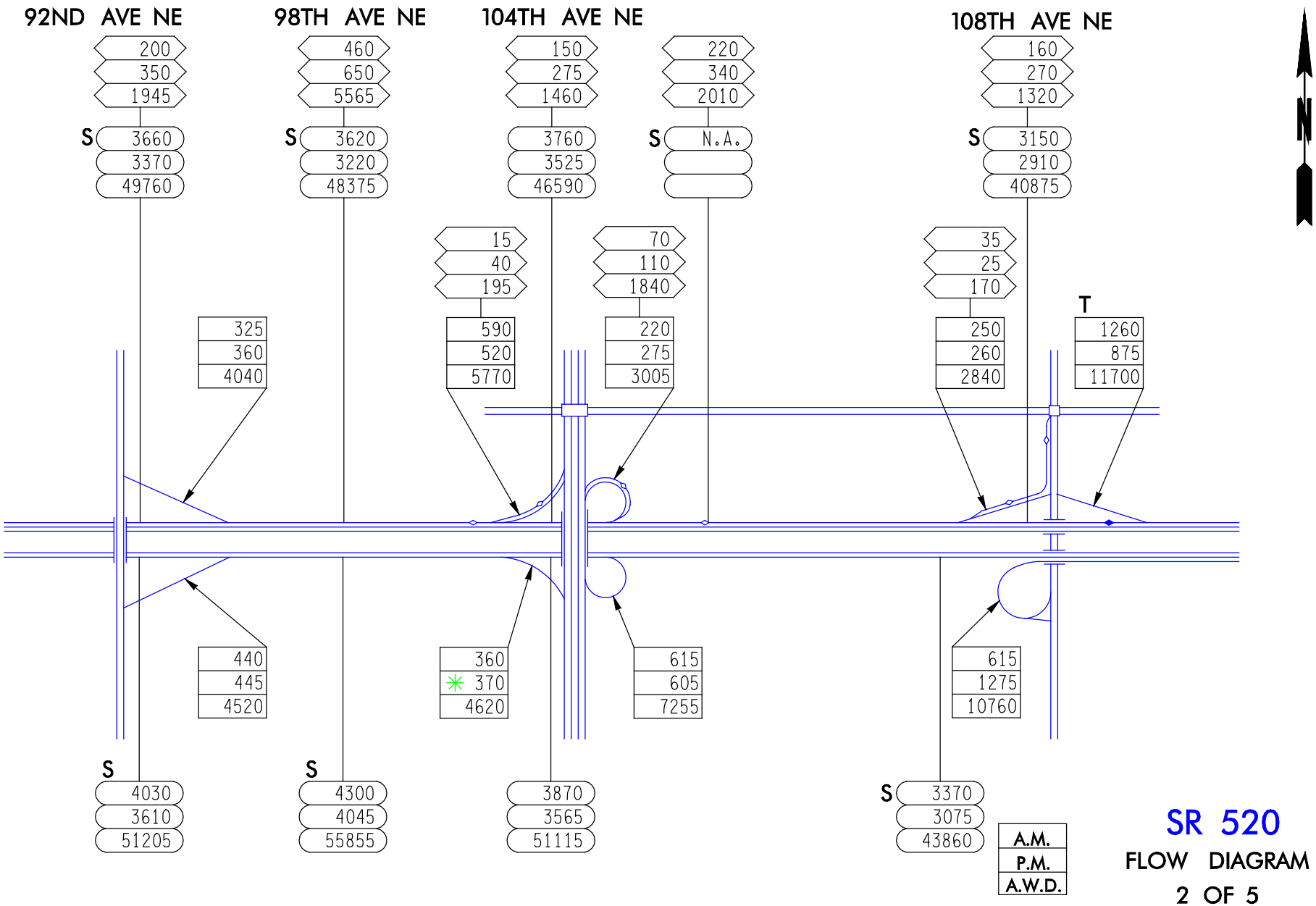

SR 520

FLOW DIAGRAM

2 OF 5