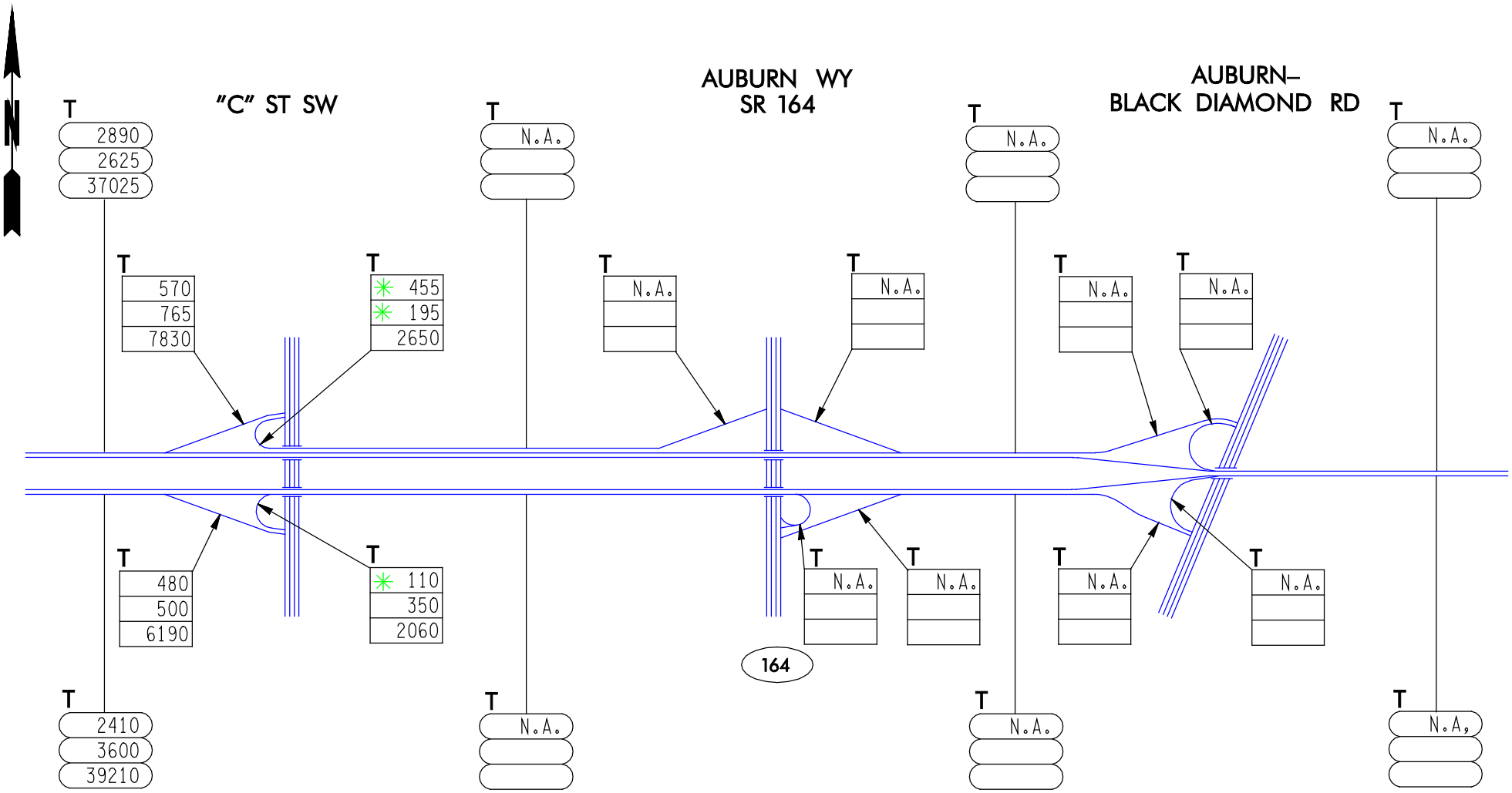

A.M.
P.M.
A.W.D.

SR 18

FLOW DIAGRAM

2 OF 2