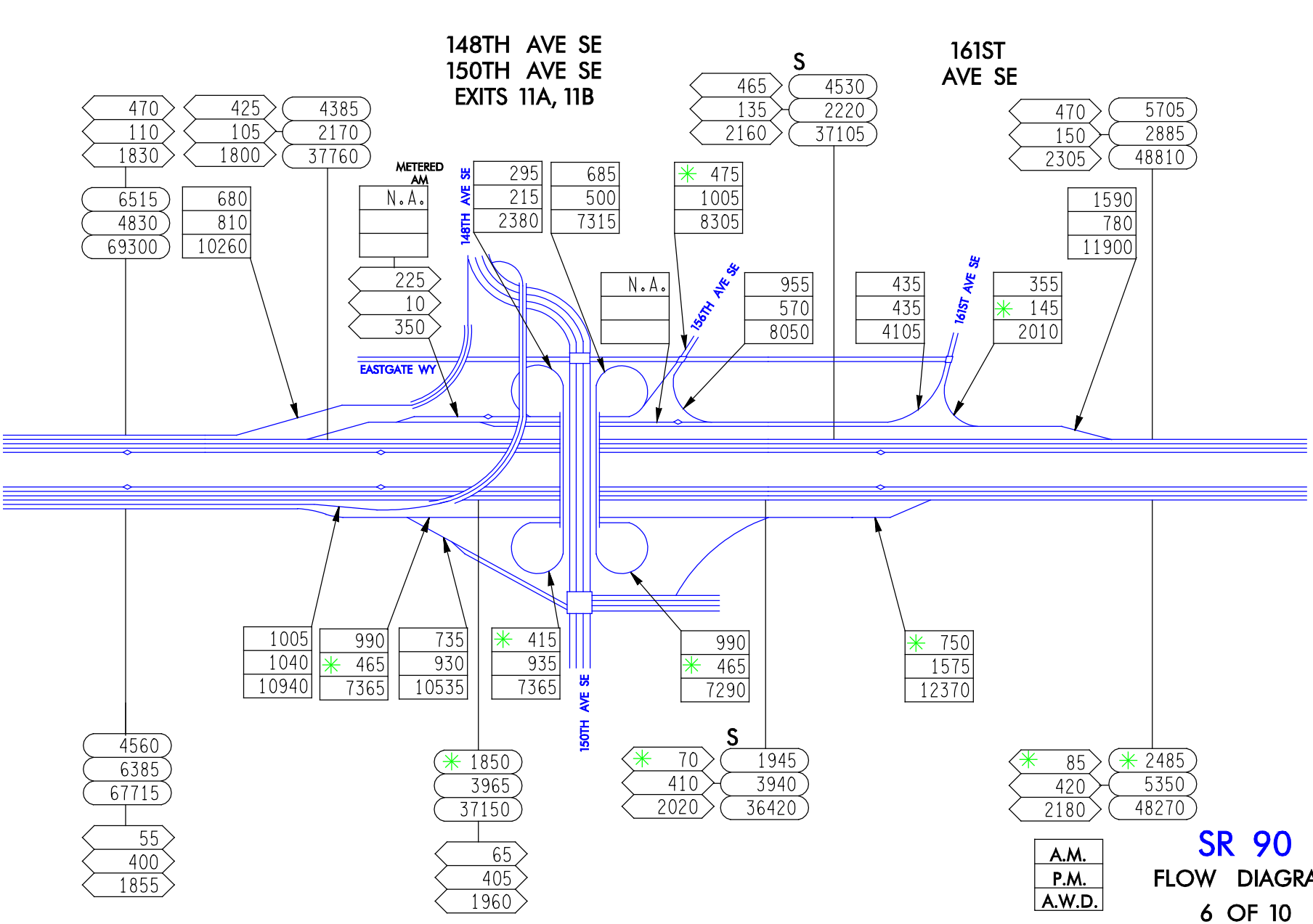
148TH AVE SE
150TH AVE SE
EXITS 11A, 11B
161ST
AVE SE
S
470
110
1830
425
105
1800
4385
2170
37760
465
135
2160
4530
2220
37105
470
150
2305
5705
2885
48810
METERED
AM
N.A.
295
215
2380
685
500
7315
475
1005
8305
6515
4830
69300
680
810
10260
1590
780
11900
225
10
350
N.A.
955
570
8050
435
435
4105
355
145
2010
148TH AVE SE
156TH AVE SE
161ST AVE SE
EASTGATE WY
1005
1040
10940
990
465
7365
735
930
10535
415
935
7365
990
465
7290
750
1575
12370
150TH AVE SE
4560
6385
67715
55
400
1855
1850
3965
37150
65
405
1960
S
70
410
2020
1945
3940
36420
85
420
2180
2485
5350
48270
A.M.
P.M.
A.W.D.
SR 90
FLOW DIAGRAM
6 OF 10