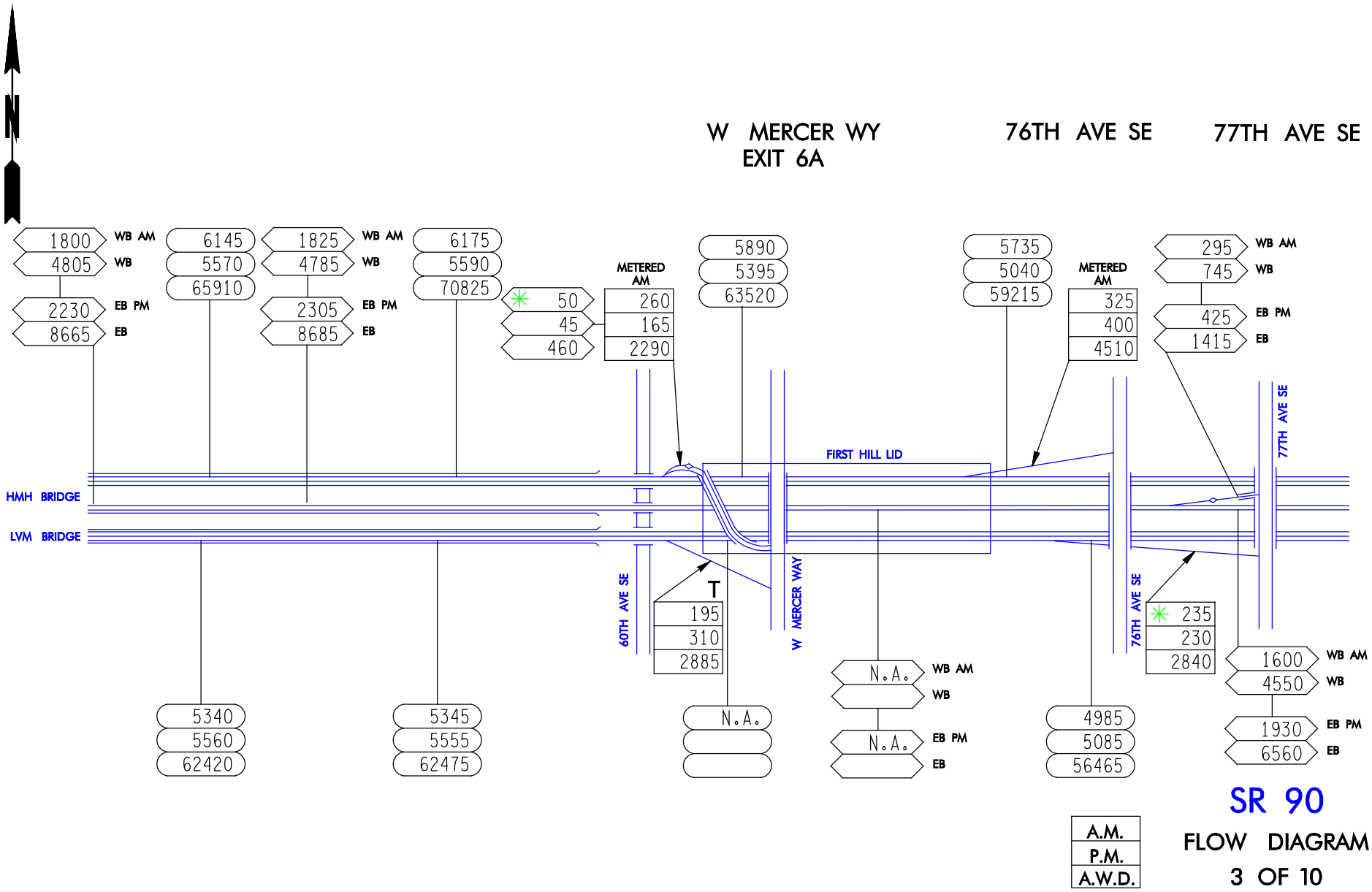

SR 90

FLOW DIAGRAM

3 OF 10