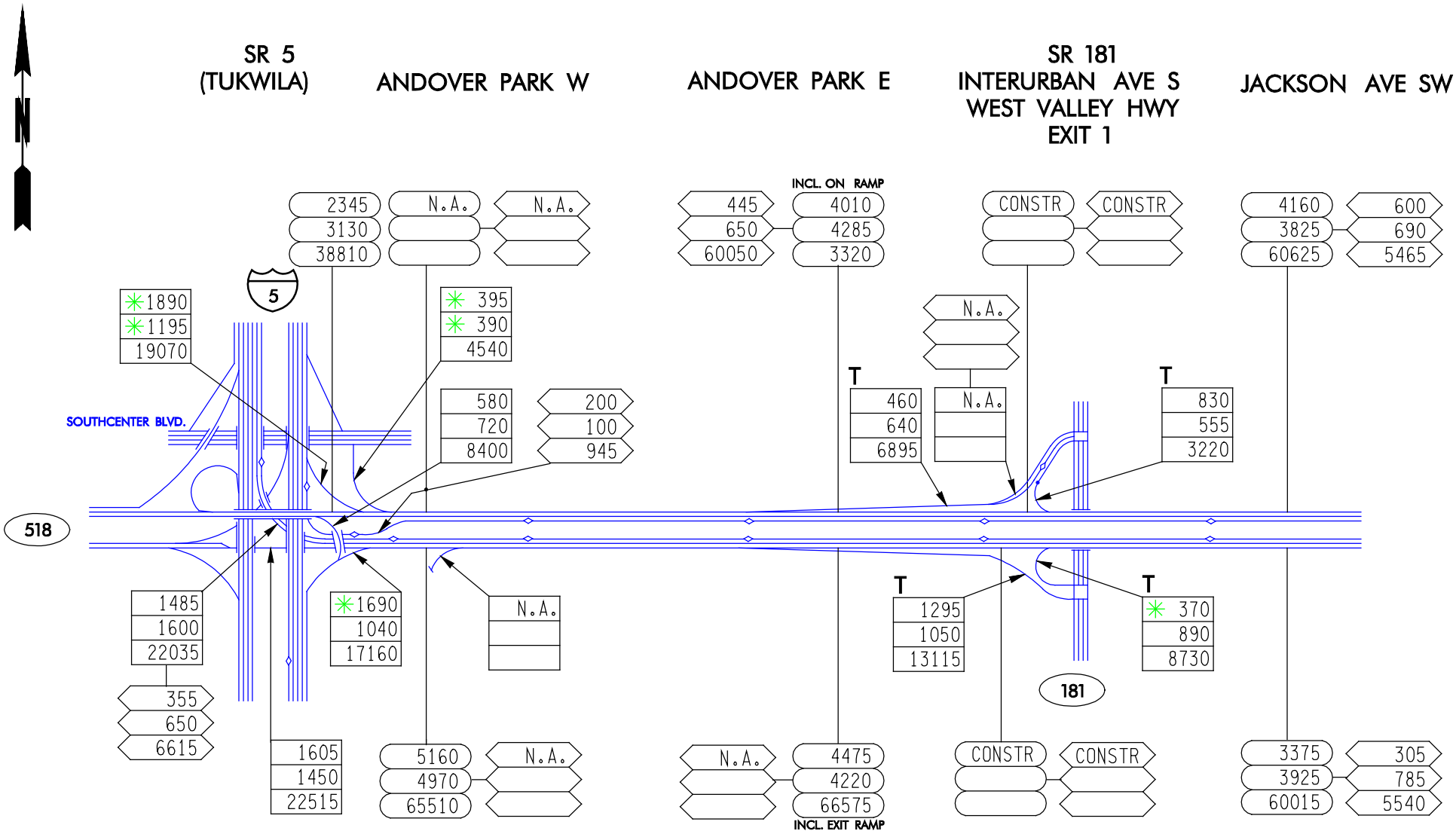

SR 405
FLOW DIAGRAM
1 OF 14