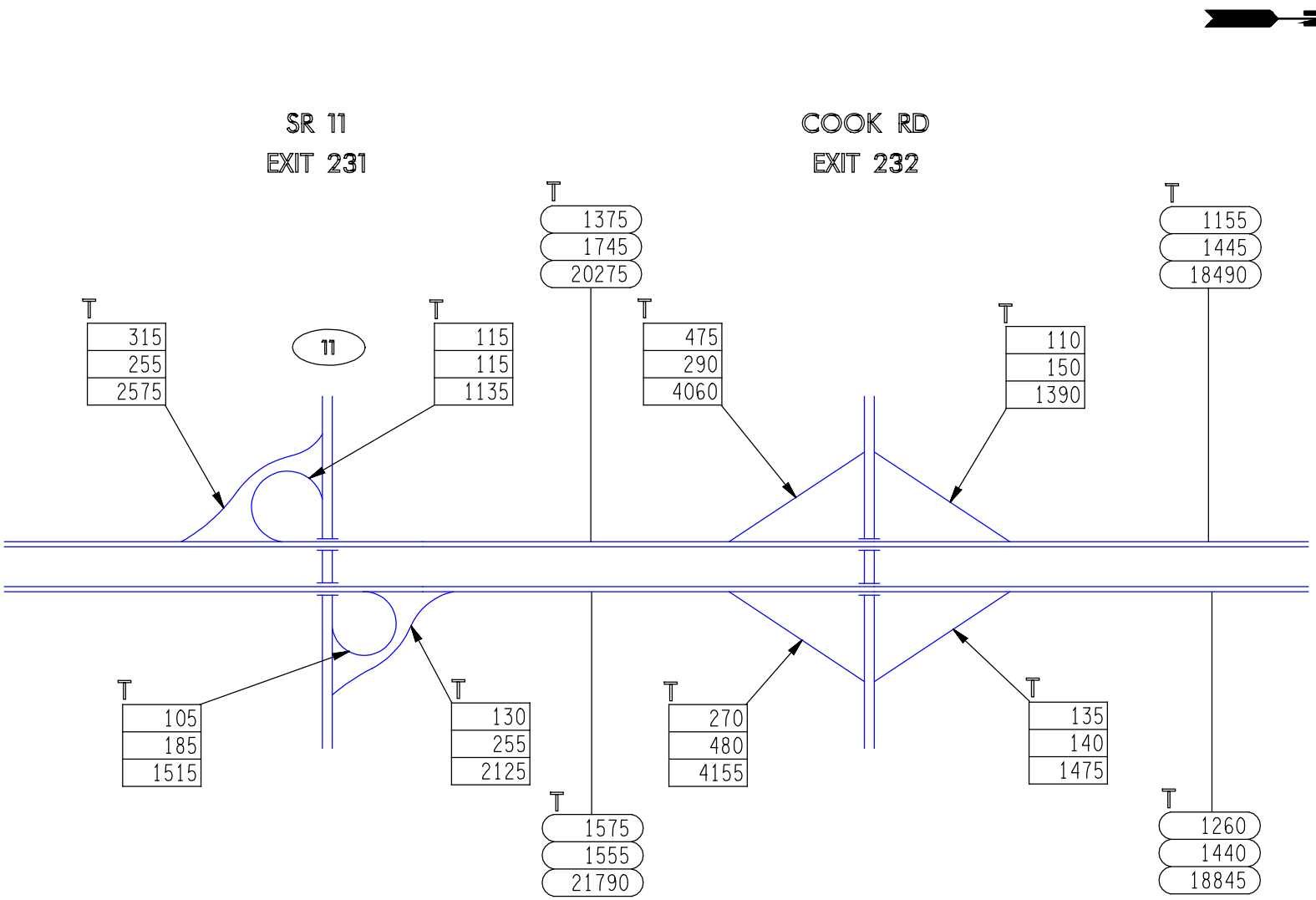

A.M.
P.M.
A.W.D.

SR 5

FLOW DIAGRAM

23 OF 23