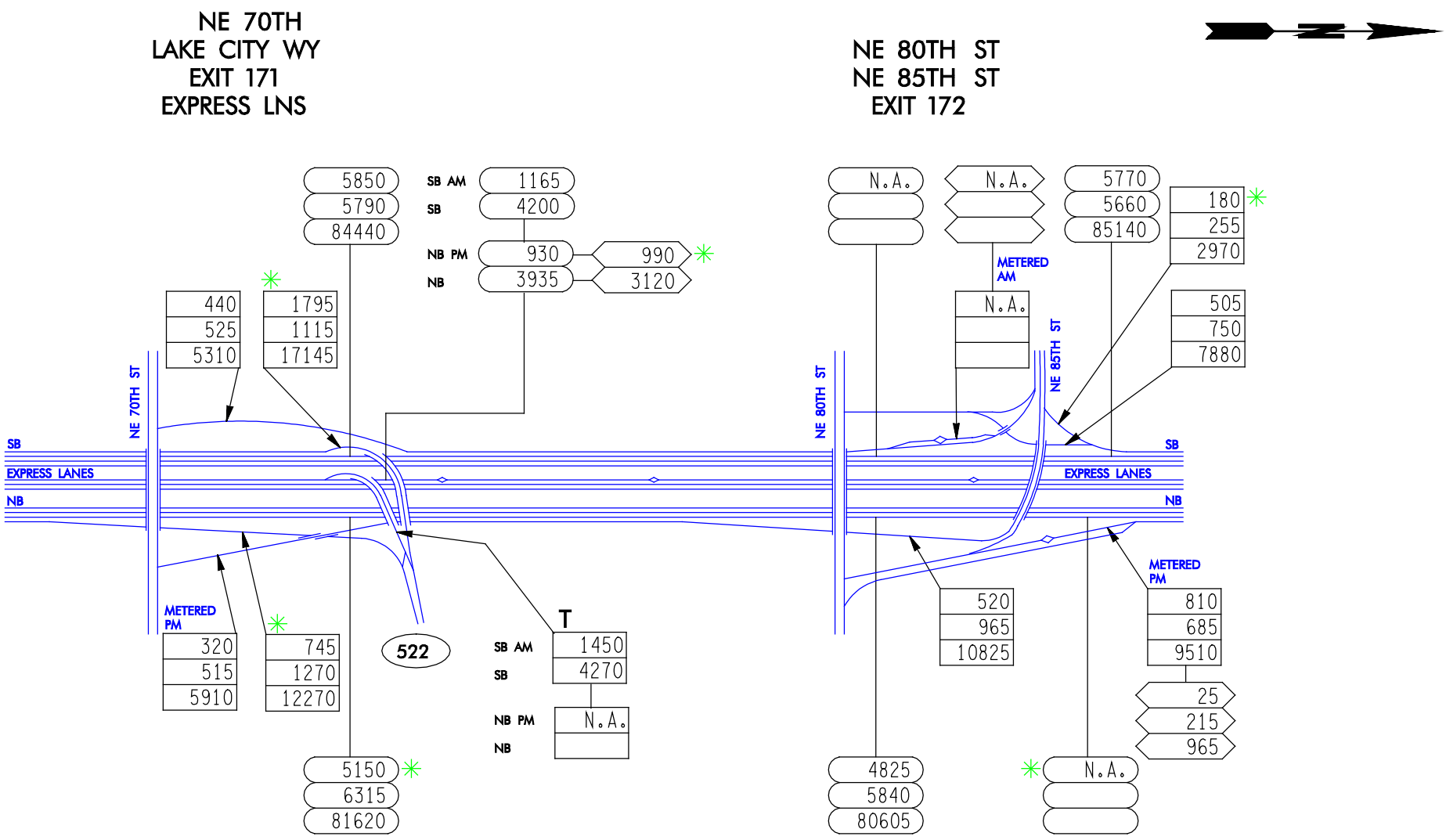

SR 5

FLOW DIAGRAM

11 OF 23