KEY

1. METER BASE PER SERVING UTILITY REQUIREMENTS. AS A MINIMUM, THE METER BASE SHALL BE SAFETY SOCKET BOX WITH FACTORY INSTALLED TEST BYPASS FACILITY THAT MEETS THE REQUIREMENTS OF EUSERC DRAWING 305.
2. MAIN BREAKER (SEE BREAKER SCHEDULE)
3. PHOTOCELL BREAKER (SPST 15 AMP - 120/240 VOLT)
4. TEST SWITCH (SPDT SNAP ACTION, POSITIVE CLOSE 15 AMP - 120/277 VOLT - "T" RATED)
5. PHOTO ELECTRIC CONTROL, STD. SPEC. 9 - 29.11(2)
6. BRANCH BREAKER (SEE BREAKER SCHEDULE)
7. SIGNAL BREAKER (SEE BREAKER SCHEDULE)
8. CONTACTOR (SEE BREAKER SCHEDULE)
9. RECEPTACLE BREAKER (SPST 2O AMP - 120/240 VOLT)
10. RECEPTACLE, GROUNDED (GFCI 2O AMP - 125 VOLT)
11. NEUTRAL BUSS, 14 LUG COPPER
12. PHOTOCELL ENCLOSURE - ENCLOSURE TO BE FABRICATED FROM 5/8" EXPANDED STEEL MESH WITH WELDED SEAMS AND MOUNTING FLANGES. HOT DIP GALVANIZED AFTER FABRICATION. TYPE 5052 - H32 ALUMINUM WITH 5/8" x 5/8" OPENINGS EQUIVALENT TO 5/8" EXPANDED STEEL MESH MAY BE USED AS ALTERNATIVE MATERIAL. SEE PHOTOCELL ENCLOSURE MOUNTING DETAILS, SHEET 2 OF 2.
13. HINGED FRONT FACING DOOR WITH 4" x 4" MIN. POLISHED WIRE GLASS WINDOW.
14. HINGED DEAD FRONT WITH 1/4 TURN FASTENERS OR SLIDE LATCH.
15. CABINET MAIN BONDING JUMPER. BUSS SHALL BE 4 LUG TINNED COPPER. SEE CABINET MAIN BONDING JUMPER DETAIL ON SHEET 2 OF 2.
16. SPARE BRANCH BREAKER (DPST 20AMP- 120/240 VOLT)
17. METAL WIRING DIAGRAM HOLDER
18. 1/4" DIAMETER DRAIN HOLE. DRILL BEFORE GALVANIZING.
19. MOUNTING HOLE. SEE SERVICE CABINET MOUNTING DETAIL.

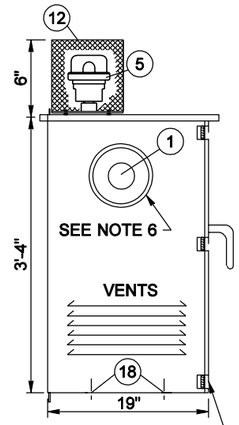

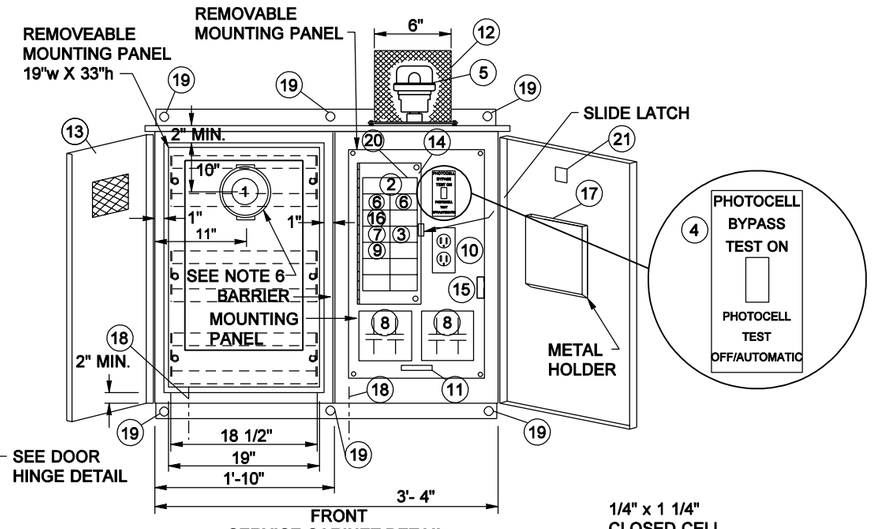

SERVICE CABINET DETAIL

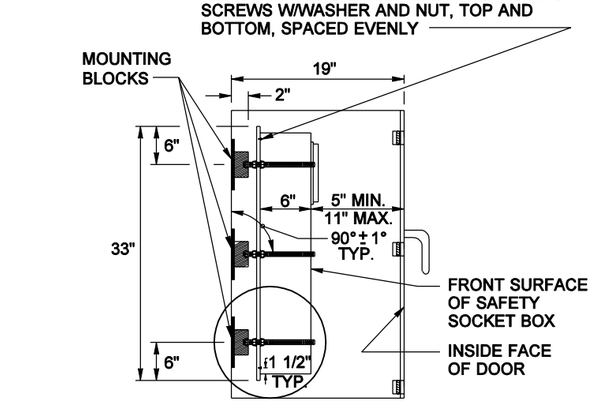

LEFT SIDE- SAFETY SOCKET BOX MOUNTING DETAIL

VERIFY THE SERVICE UTILITY STAND OFF DIMENSION. ADJUST REMOVABLE PANEL TO MEASUREMENT PROVIDED BY UTILITY COMPANY. AFTER ADJUSTMENT CUT OFF ALL THREAD BOLT SO THAT NOT LESS THAN 2 FULL THREADS NOR MORE THAN 3 FULL THREADS EXTEND PAST FACE OF NUT.

KEY (cont.)

20. 18 CIRCUIT PANEL BOARD- MINIMUM SIZE WITH SEPARATE MAIN BREAKER
21. LABEL CABINET WITH BUSSWORK RATING

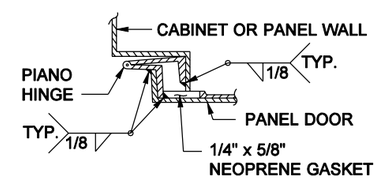

DOOR HINGE DETAIL

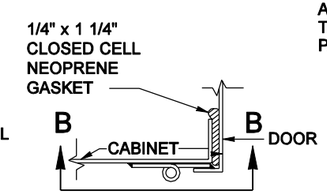

REMOVE HINGE PIN PRIOR TO WELDING HINGE TO CABINET AND PRIOR TO HOT DIP GALVANIZING CABINET. AFTER GALVANIZING REPLACE PIN WITH BRASS PIN & SOLDER IN PLACE.

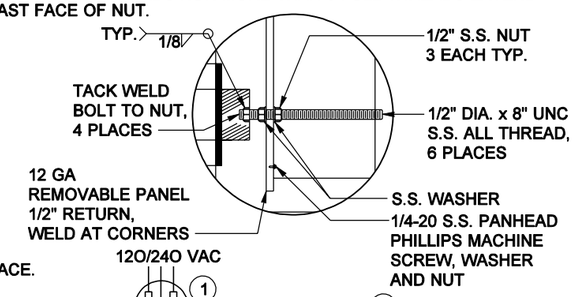

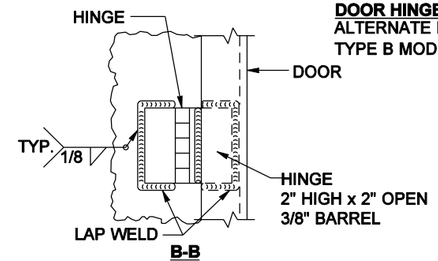

B-B

DOOR HINGE DETAIL
ALTERNATE FOR
TYPE B MODIFIED CABINET

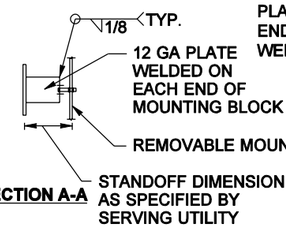

SECTION A-A

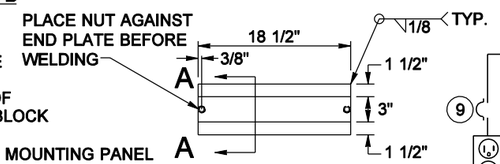

MOUNTING BLOCK DETAIL
12 GA - MATERIAL TO BE SAME AS CABINET MATERIAL

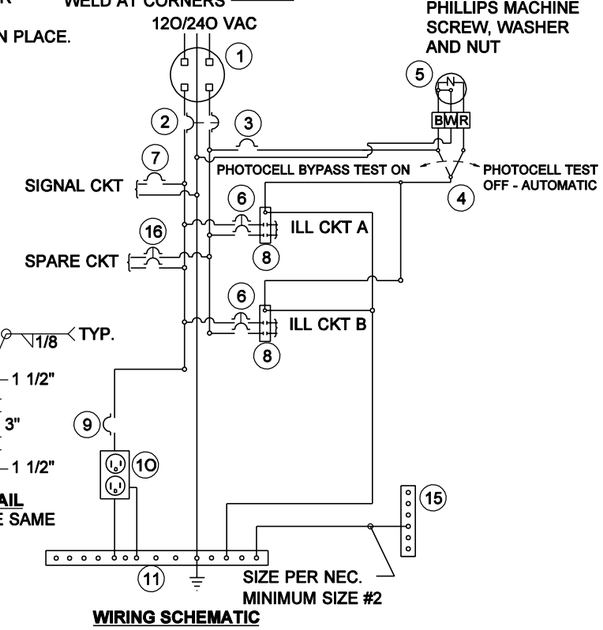

WIRING SCHEMATIC

GENERAL NOTES
200 AMP TYPE 120/240 1ø SERVICE CABINET

1. SEE DIVISION 9, SERVICE CABINETS, IN THE STANDARD SPECIFICATIONS.
2. HINGES SHALL HAVE STAINLESS STEEL OR BRASS PINS.
3. CABINETS SHALL BE RATED NEMA 3R AND SHALL INCLUDE TWO RAIN TIGHT VENTS.
4. METERING EQUIPMENT DOOR SHALL BE PAD LOCKABLE. EACH DOOR SHALL BE GASKETED. INSTALL BEST CX CONSTRUCTION CORE ON RIGHT DOOR. SEE DOOR HINGE DETAIL, SHEET 1 OF 2. BOTH DOORS SHALL HAVE A 2 POSITION DOOR STOP ASSEMBLY.
5. THE FOLLOWING EQUIPMENT WITHIN THE SERVICE ENCLOSURE SHALL HAVE AN APPROPRIATELY ENGRAVED PHENOLIC NAME PLATE ATTACHED WITH SCREWS OR RIVETS: KEY NUMBERS 2, 3, 4, 6, 7, 8, 9 AND 16. KEY NUMBER 4 NAME PLATE SHALL READ; PHOTOCELL BYPASS TEST ON AND PHOTOCELL TEST OFF- AUTOMATIC. SEE SERVICE CABINET DETAIL.
6. METERING ARRANGEMENTS VARY WITH DIFFERENT SERVING UTILITIES. THE UTILITY MAY REQUIRE METER BASE MOUNTING IN THE ENCLOSURE, ON THE SIDE OR ON THE BACK OF THE ENCLOSURE. THE UTILITY MAY REQUIRE THE DIMENSION BETWEEN THE DOOR AND THE FRONT OF THE SAFETY SOCKET BOX TO BE LESS THAN THE 11 INCHES SHOWN IN THE LEFT SIDE- SAFETY SOCKET BOX MOUNTING DETAIL. THE CONTRACTOR SHALL VERIFY THE SERVING UTILITY'S REQUIREMENTS PRIOR TO FABRICATION OF AND INSTALLING THE SERVICE EQUIPMENT.
7. DIMENSIONS SHOWN ARE MINIMUM AND SHALL BE ADJUSTED TO ACCOMMODATE THE VARIOUS SIZES OF EQUIPMENT INSTALLED.
8. ALL BUSSWORK SHALL BE HIGH GRADE COPPER AND SHALL EQUAL OR EXCEED THE MAIN BREAKER RATING. ALL BREAKERS SHALL BOLT ONTO THE BUSSWORK. JUMPERING OF BREAKERS SHALL NOT BE ALLOWED. BUSSWORK SHALL ACCOMMODATE ALL FUTURE EQUIPMENT AS SHOWN IN THE BREAKER SCHEDULE.
9. THE PHOTOCELL UNIT SHALL BE CENTERED IN THE PHOTOCELL ENCLOSURE TO PERMIT 360 DEGREE ROTATION OF THE PHOTOCELL WITHOUT REMOVAL OF THE PHOTOCELL UNIT OR THE PHOTOCELL ENCLOSURE.
10. ALL INTERNAL WIRE RUNS SHALL BE IDENTIFIED WITH "TO - FROM" CODED TAGS LABELED WITH THE CODE LETTERS AND/OR NUMBERS SHOWN ON THE SCHEDULES. APPROVED PVC OR POLYOLEFIN WIRE MARKING SLEEVES SHALL BE USED.
11. ALL NUTS, BOLTS AND WASHERS USED FOR MOUNTING THE PHOTOCELL ENCLOSURE SHALL BE STAINLESS STEEL.
12. A 1% TOLERANCE IS ALLOWED FOR ALL DIMENSIONS.
13. UNISTRUT OR EQUIVALENT CHANNEL AND MOUNTING HARDWARE COMPONENTS SHALL BE STAINLESS STEEL. CONDUIT CLAMPS SHALL BE HOT DIPPED, GALVANIZED STEEL OR STAINLESS STEEL.
14. INSTALL CONDUIT COUPLINGS ON ALL CONDUITS. PLACE COUPLINGS FLUSH WITH TOP OF CONCRETE FOUNDATION.
15. NOTE 15 HAS BEEN DELETED
16. THE METER BASE PORTION OF THIS SERVICE WAS DESIGNED TO MEET METERING PORTION OF EUSERC DRAWING 309 REQUIREMENTS.

SPECIAL DESIGN
SERVICE CABINET TYPE B MODIFIED
0-200 AMP TYPE 120/240 1ø SERVICE CABINET

FILE NAME	s:\414126\Electrical\MASTER_FILES\DETAILS\TYPE_B_MOD_10-31-02.dgn					
TIME	11:02:04 AM			REGION NO.	STATE	FED.AID PROJ.NO.
DATE	11/07/2002			10	WASH	
		CHNG SCREWS TO PANHEAD PHILLIPS MACHINE SCREWS.	10-31-2002	JH	JOB NUMBER	
DESIGNED BY		ADD REMOVEABLE MOUNT. PANEL	8-20-2002	JH		
ENTERED BY		ADD KEY 20 & 21, CABINET HEIGHT	6-06-2002	JH		
CHECKED BY		NOTE 15 DELETED	1-21-2002	JH	CONTRACT NO.	LOCATION NO.
PROJ. ENGR.		REVISIONS TO MEET EUSERC REQUIREMENTS	9-20-2001	JH		
REGIONAL ADM.		REVISION	DATE	BY		

DATE
P.E. STAMP BOX

DATE
P.E. STAMP BOX

Washington State Department of Transportation

SERVICE CABINET
TYPE B MODIFIED

ENGLISH

PLOT1
7.20E
SHEET 1 OF 2 SHEETS

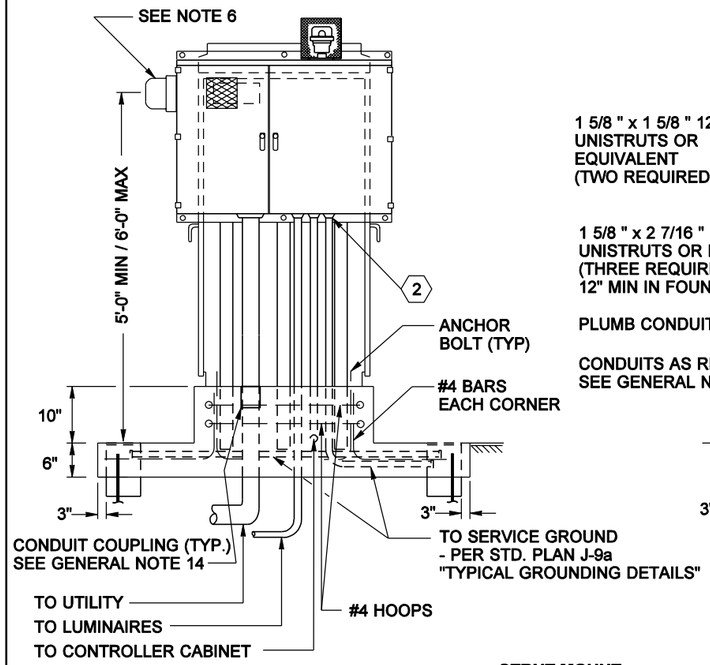

FRONT OF SERVICE CABINET

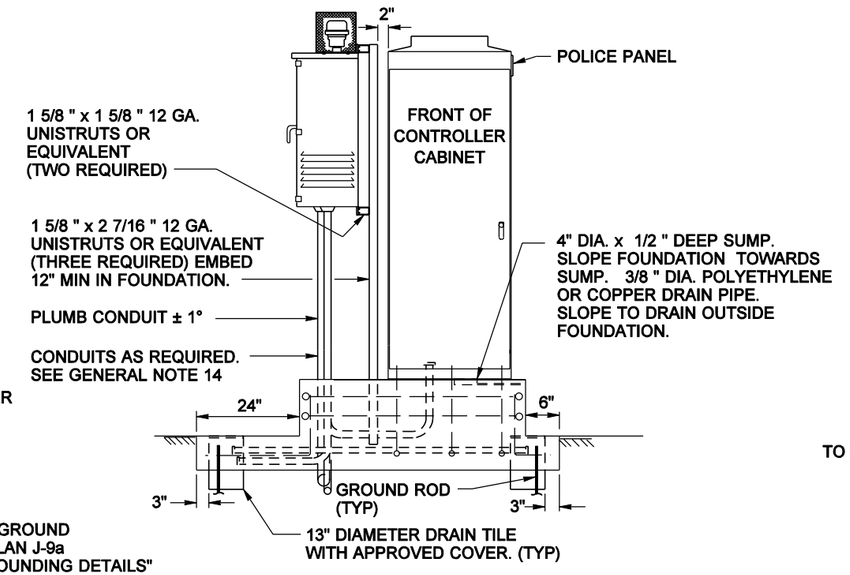

RIGHT SIDE OF SERVICE CABINET

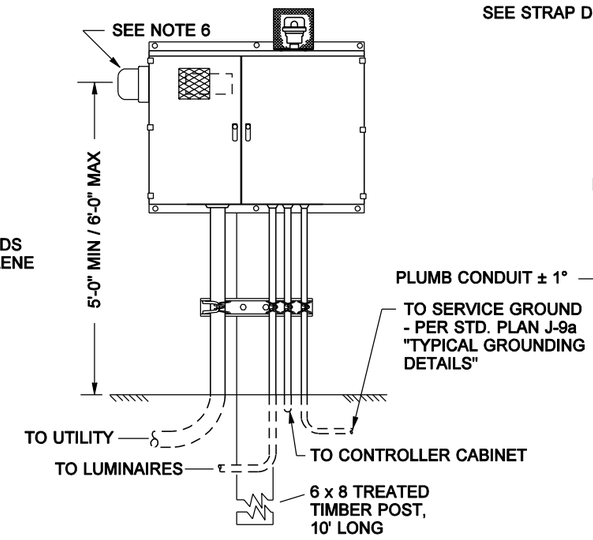

FRONT OF SERVICE CABINET

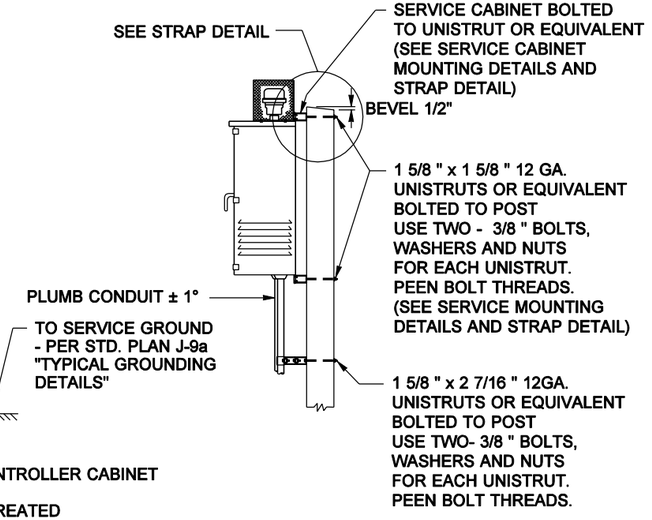

RIGHT SIDE OF SERVICE CABINET

POST MOUNT

STRUT MOUNT DETAILS

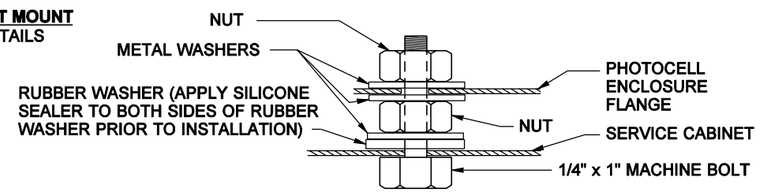

PHOTOCELL ENCLOSURE MOUNTING DETAIL

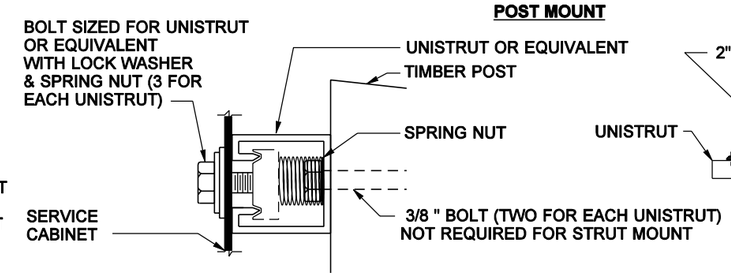

UNISTRUT MOUNTING

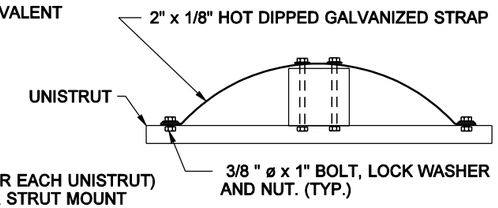

STRAP DETAIL
POST MOUNT DETAIL

SERVICE CABINET MOUNTING DETAILS

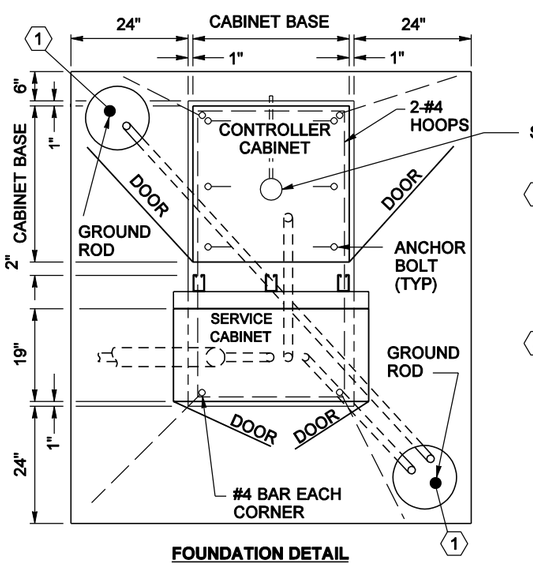

FOUNDATION DETAIL

PLAN

1. DRIVE GROUND RODS BEFORE PLACING CONCRETE. MOVE ROD(S) AND DRAIN TILE(S) WITH COVER(S) AS REQUIRED TO ACHIEVE FULL GROUND PENETRATION. MAINTAIN A 6' MINIMUM CLEARANCE BETWEEN GROUND RODS AS DETAILED ON STD. PLAN J-9a "TYPICAL GROUNDING DETAILS".
2. ALL CONDUITS PENETRATING CABINET SHALL BE TERMINATED WITH GROUNDING END BUSHING AND BONDED TO THE CABINET GROUNDING BUS.

SEE STANDARD PLAN "CABINET FOUNDATION DETAILS", FOR DETAILS NOT SHOWN.

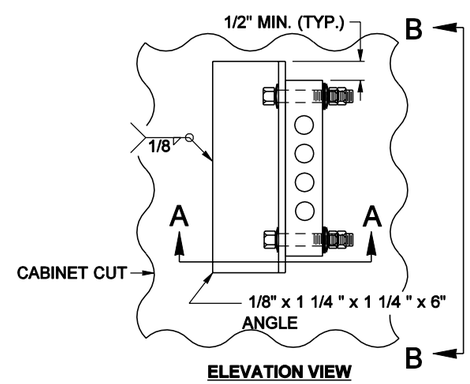

ELEVATION VIEW

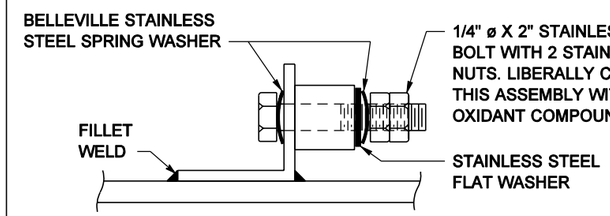

DETAIL A-A

CABINET MAIN BONDING JUMPER DETAIL.

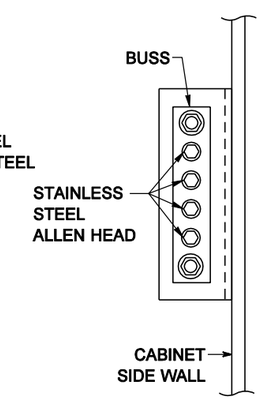

DETAIL B-B

SPECIAL DESIGN
SERVICE CABINET TYPE B MODIFIED
0-200 AMP TYPE 120/240 1ø SERVICE CABINET

FILE NAME	s:\414126\Electrical\MASTER_FILES\DETAILS\TYPE_B_MOD_10-31-02.dgn						PLOT2
TIME	11:03:41 AM			REGION NO. 10	STATE WASH	FED.AID PROJ.NO.	7.21E
DATE	11/07/2002			JOB NUMBER			SHEET 2 OF 2 SHEETS
DESIGNED BY							
ENTERED BY							
CHECKED BY	TEXT "STAINLESS STEEL" ALLEN HEAD	1-21-2002	JH	CONTRACT NO.	LOCATION NO.		
PROJ. ENGR.	REVISIONS TO MEET EUSERC REQ.	9-20-2001	JH				
REGIONAL ADM.	REVISION	DATE	BY				

P.E. STAMP BOX DATE

P.E. STAMP BOX DATE

Washington State Department of Transportation

SERVICE CABINET TYPE B MODIFIED

ENGLISH