1996 TRAFFIC VOLUMES

RAMP & ROADWAY

- Interstate 5
- State Route 18
- Interstate 90
- State Route 99
- State Route 167
- Interstate 405
- State Route 509
- State Route 518
- State Route 520
- State Route 522
- State Route 525
- State Route 526
- State Route 599

Washington State Department of Transportation
Northwest Region - Traffic Systems Management Center

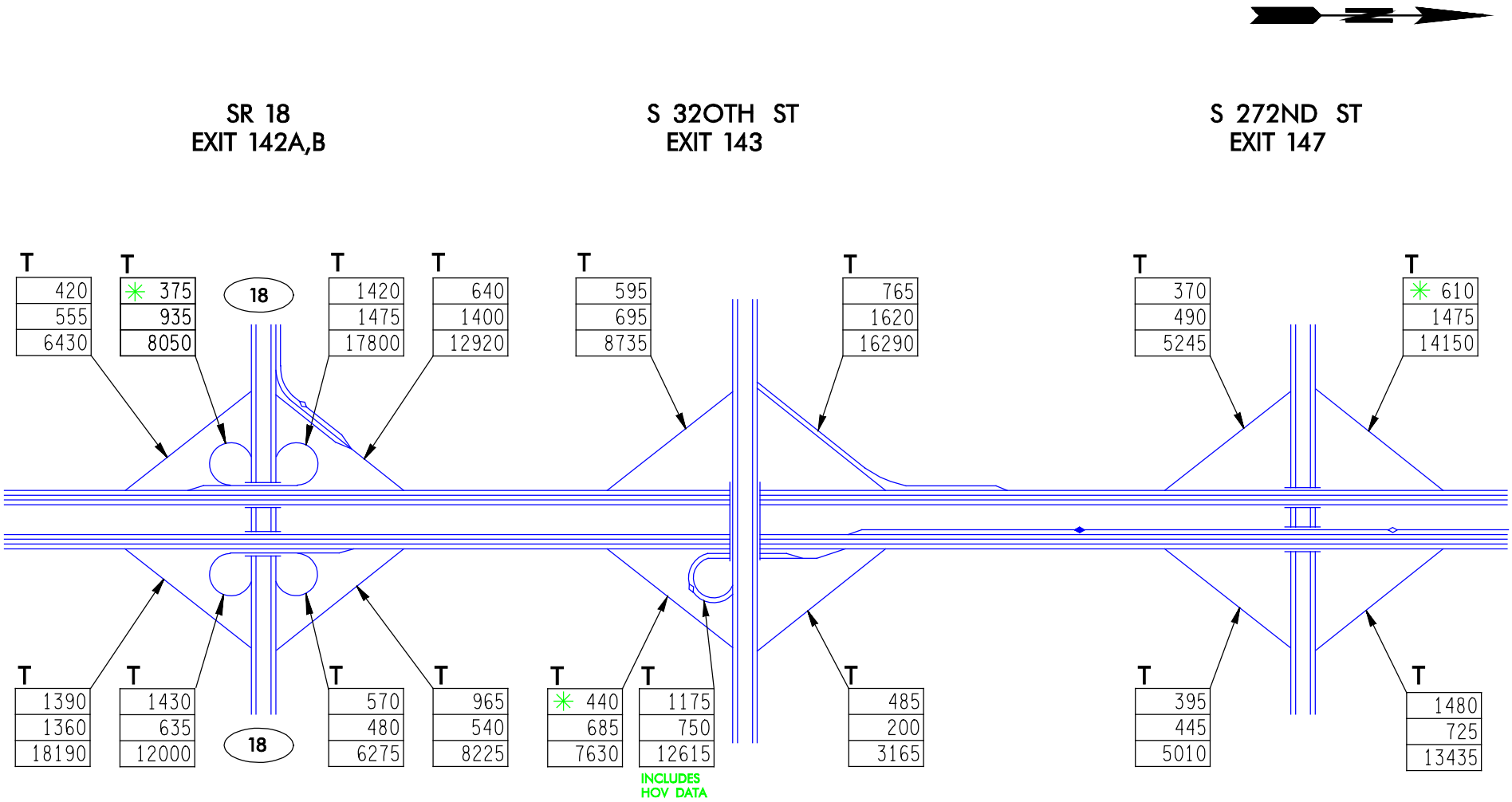

A.M.
P.M.
A.W.D.

SR 5

FLOW DIAGRAM

1 OF 19

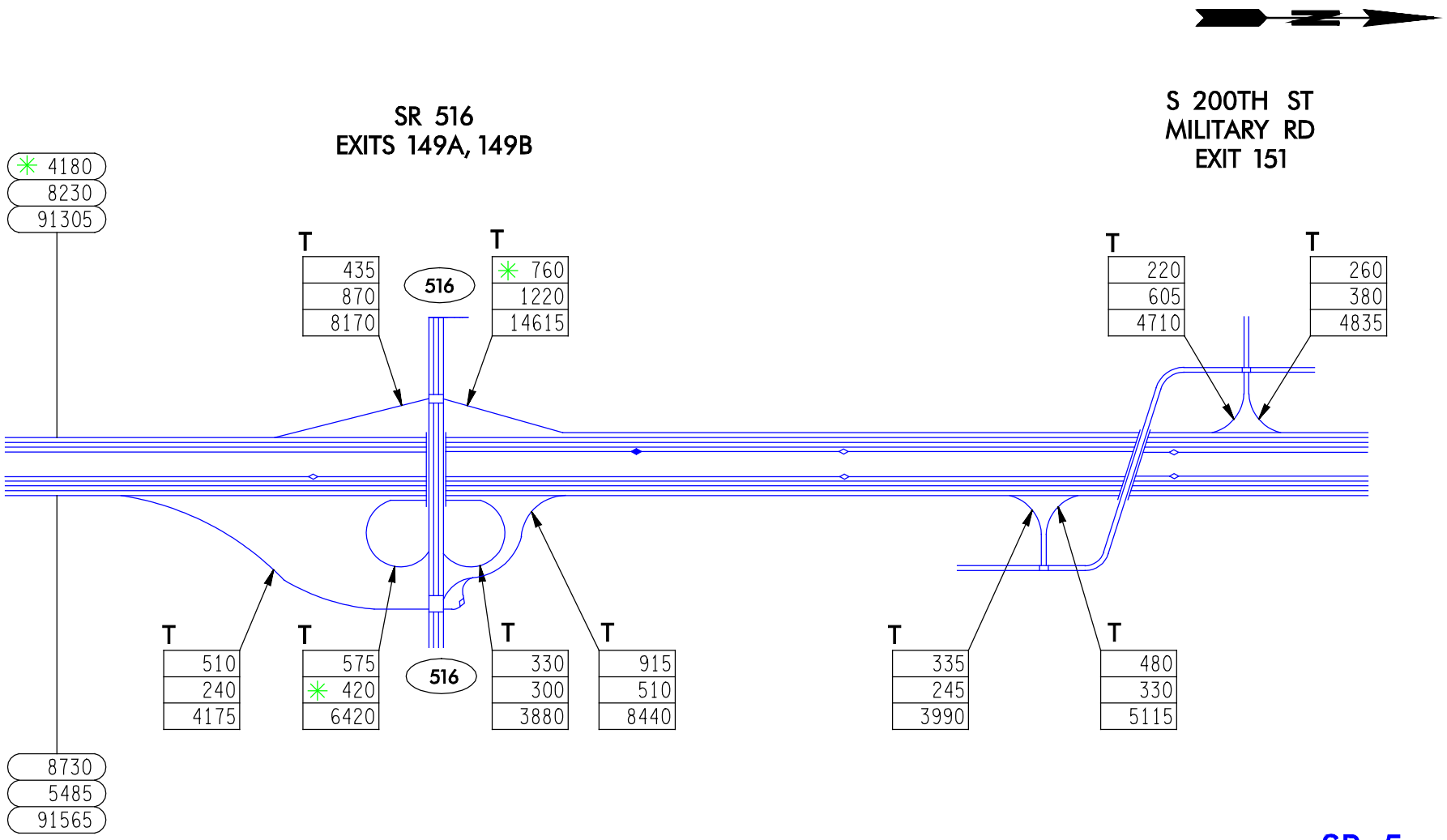

A.M.
P.M.
A.W.D.

SR 5

FLOW DIAGRAM

2 OF 19

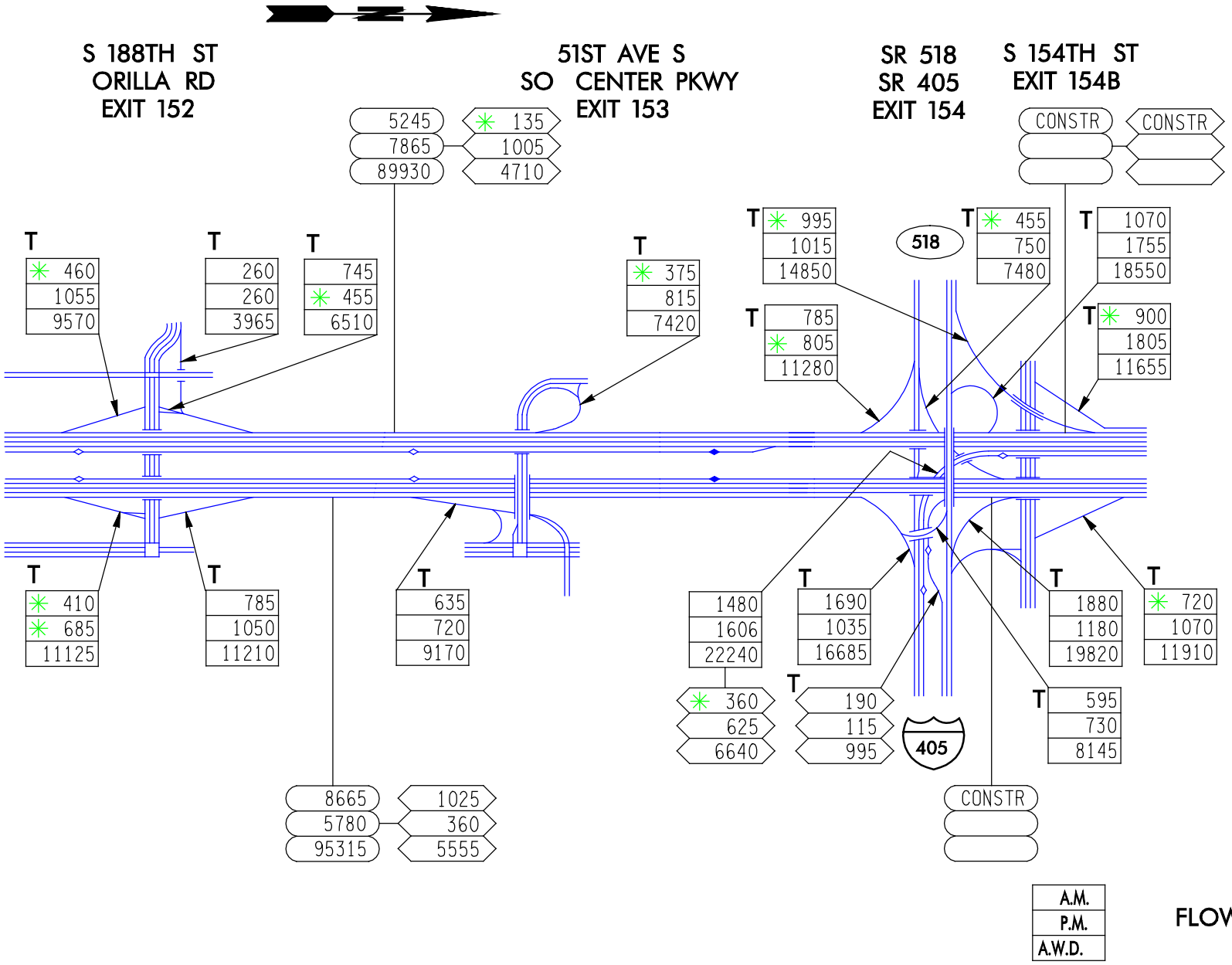

SR 5

FLOW DIAGRAM

3 OF 19

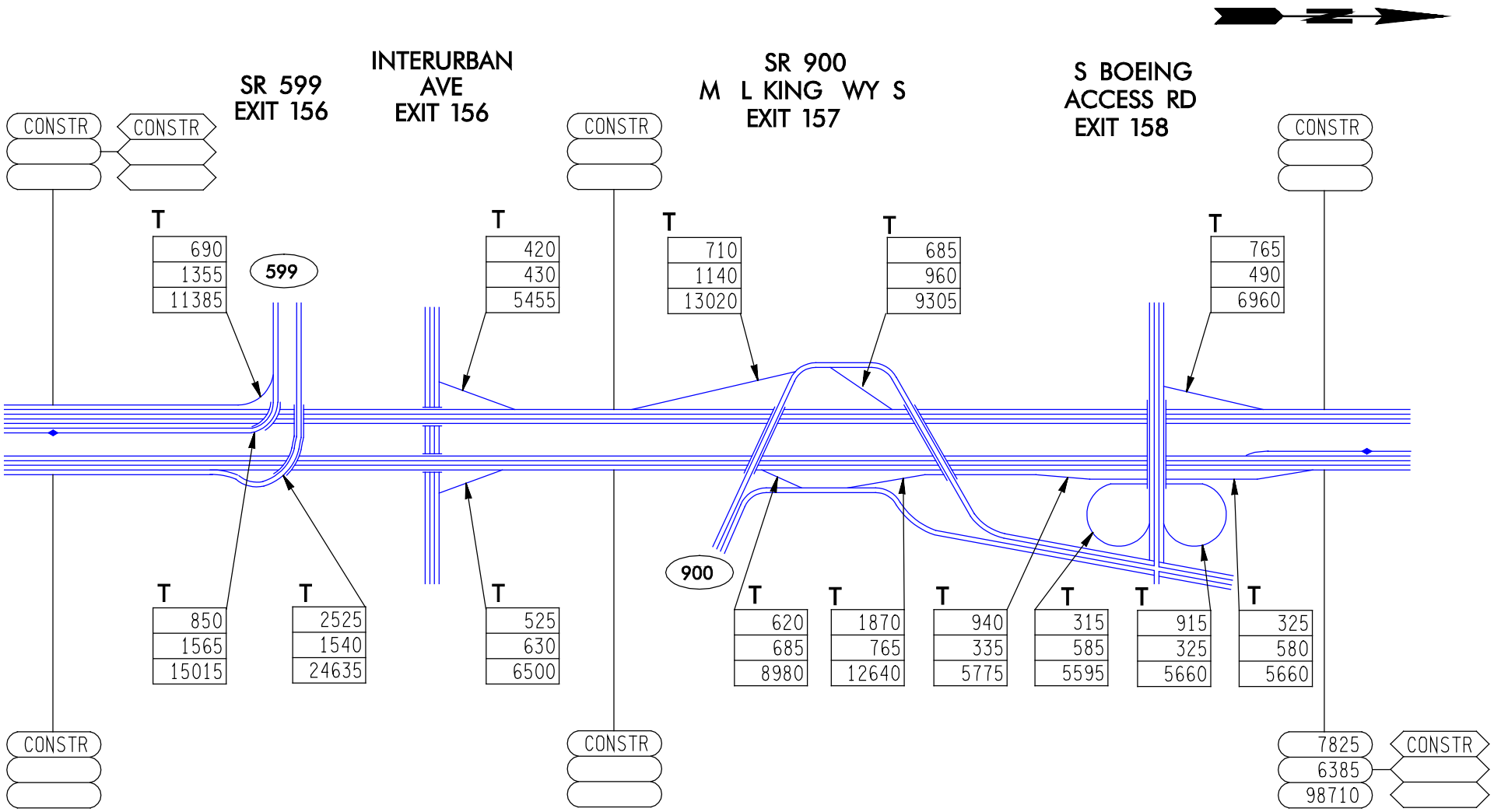

A.M.
P.M.
A.W.D.

SR 5

FLOW DIAGRAM

4 OF 19

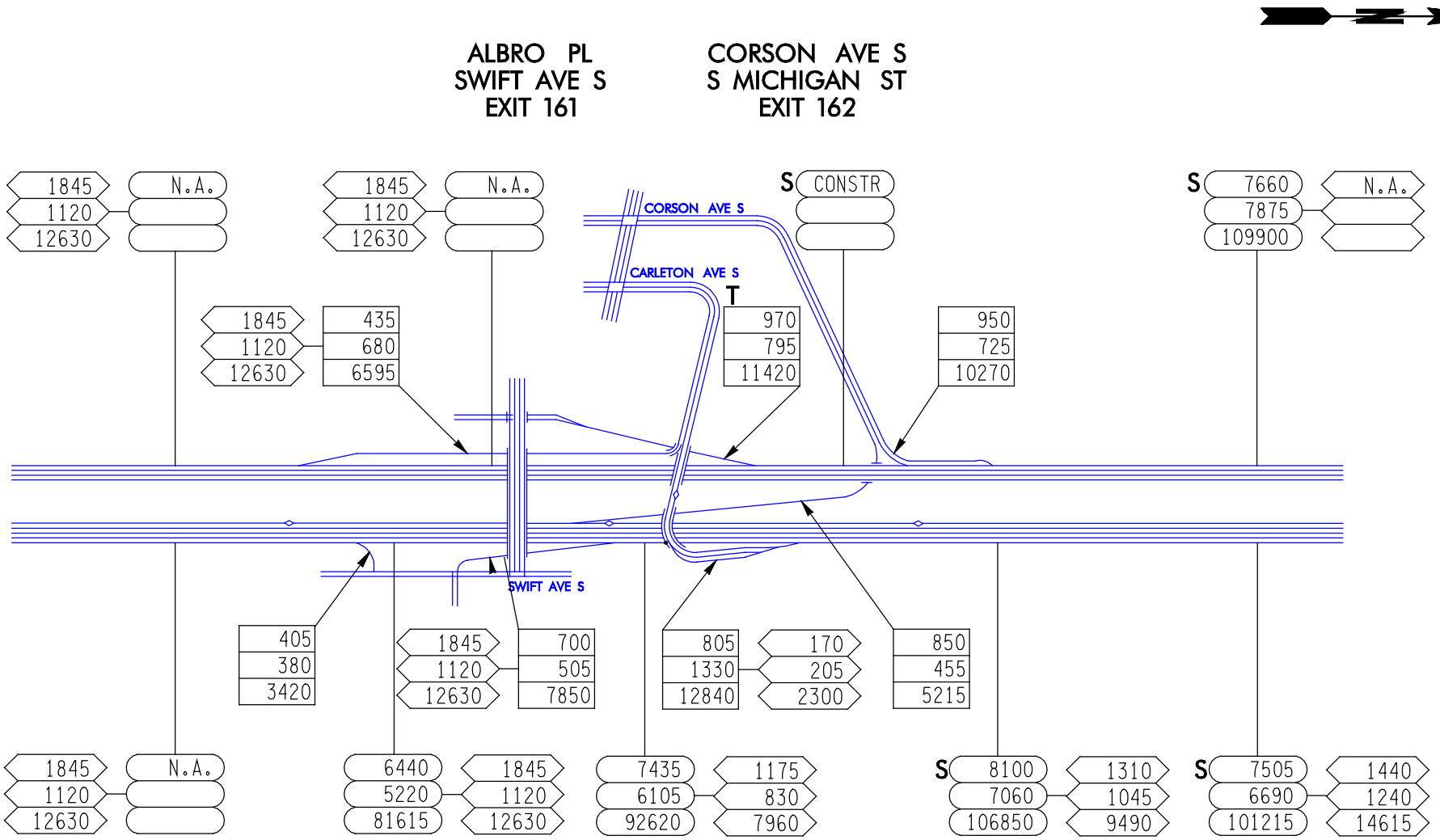

A.M.
P.M.
A.W.D.

SR 5

FLOW DIAGRAM

5 OF 19

S SPOKANE ST
COLUMBIAN WY
EXIT 163 (NB)
EXIT 163A (SB)

S FOREST ST
EXIT 163B

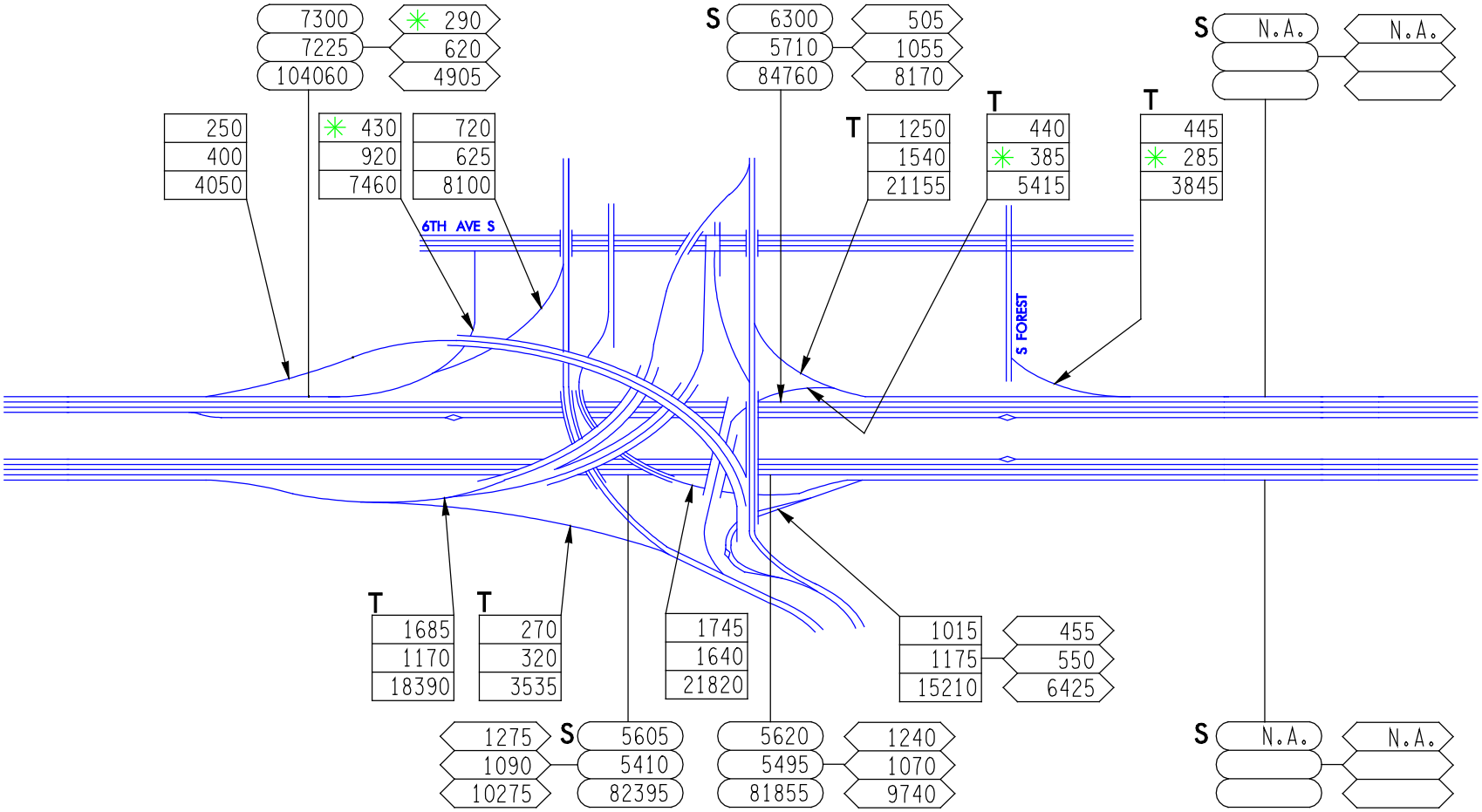

A.M.
P.M.
A.W.D.

SR 5

FLOW DIAGRAM

6 OF 19

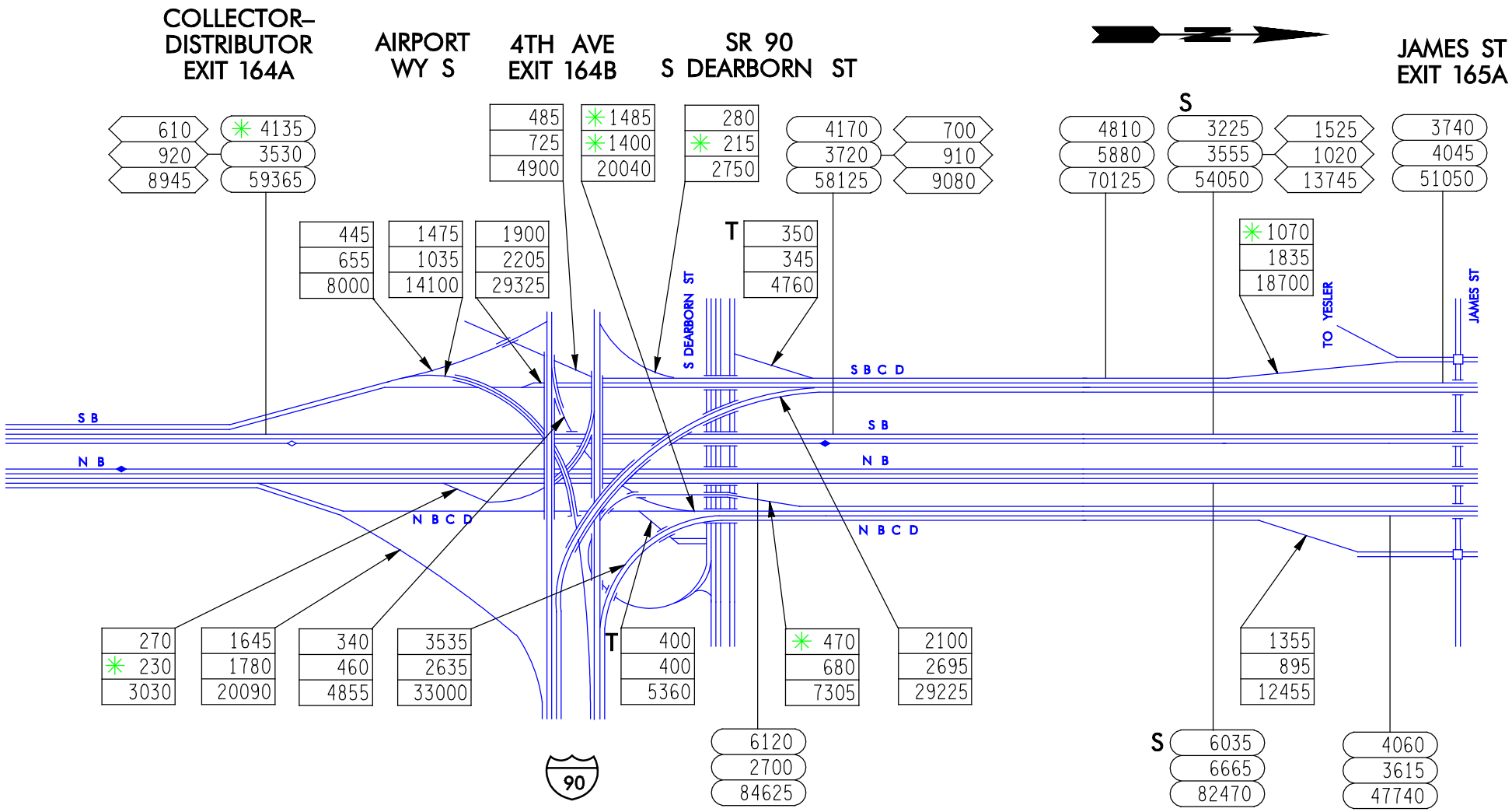

A.M.
P.M.
A.W.D.

SR 5

FLOW DIAGRAM

7 OF 19

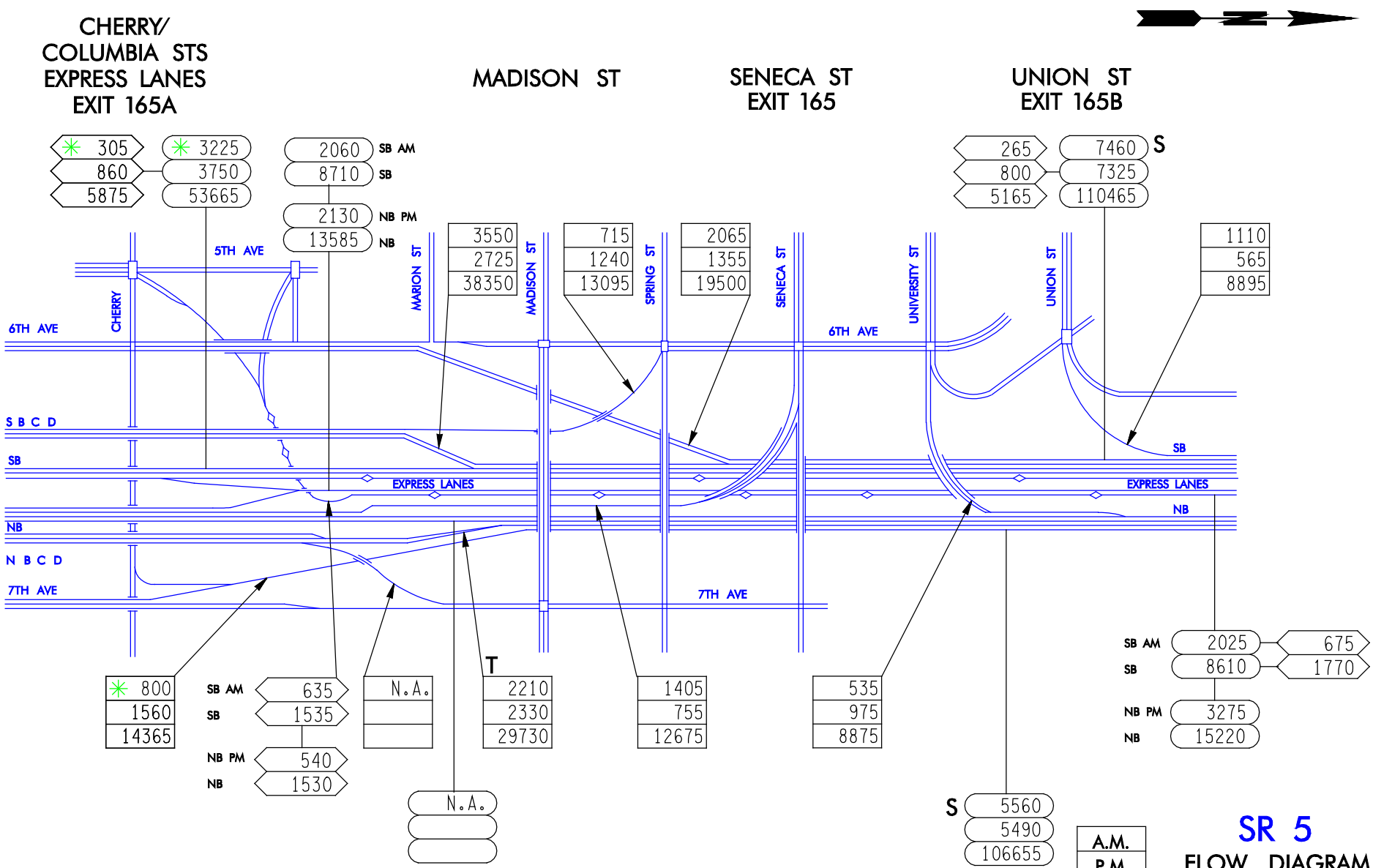

SR 5

FLOW DIAGRAM

8 OF 19

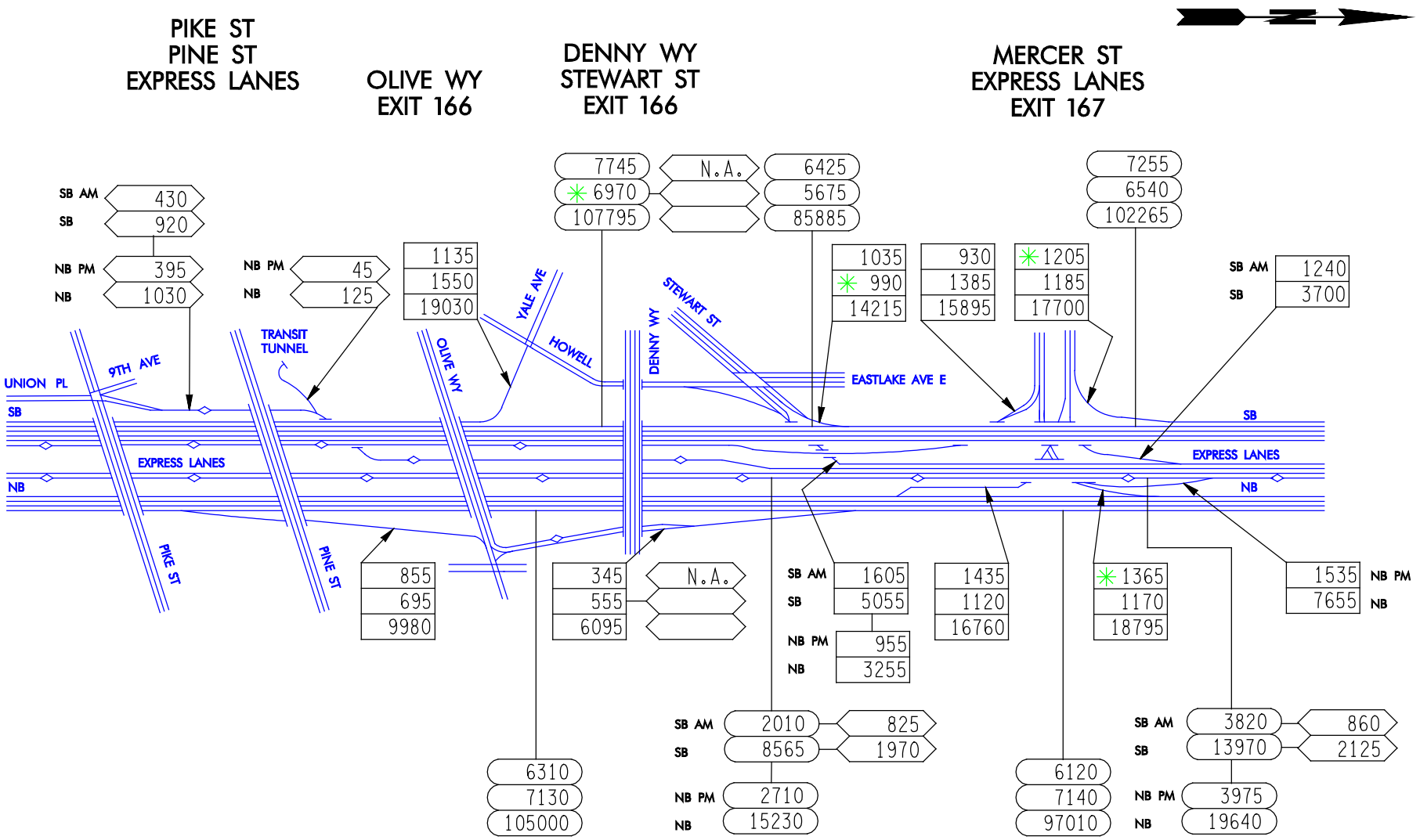

A.M.
P.M.
A.W.D.

SR 5

FLOW DIAGRAM

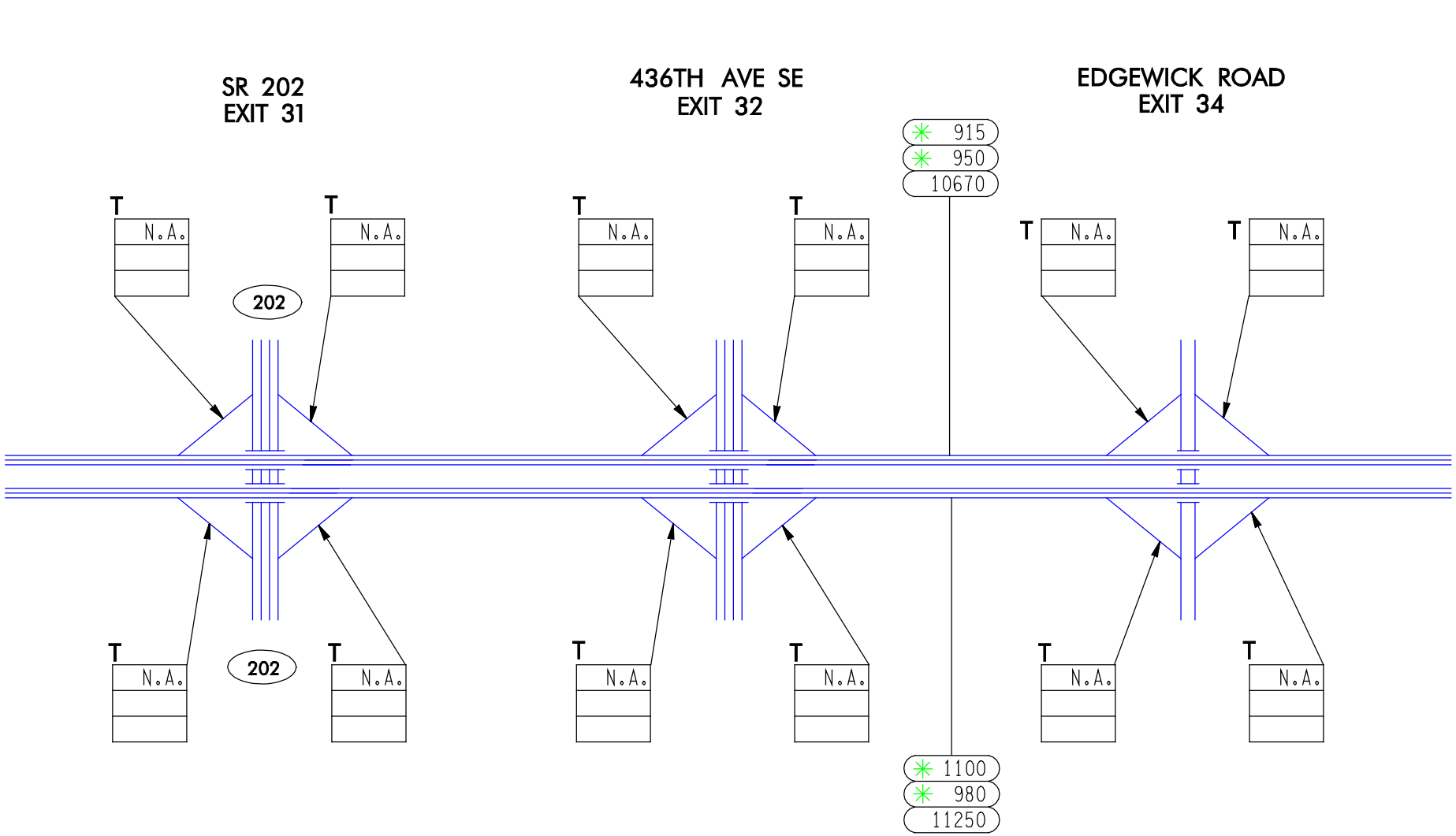

A.M.
P.M.
A.W.D.

SR 90

FLOW DIAGRAM

10 OF 10

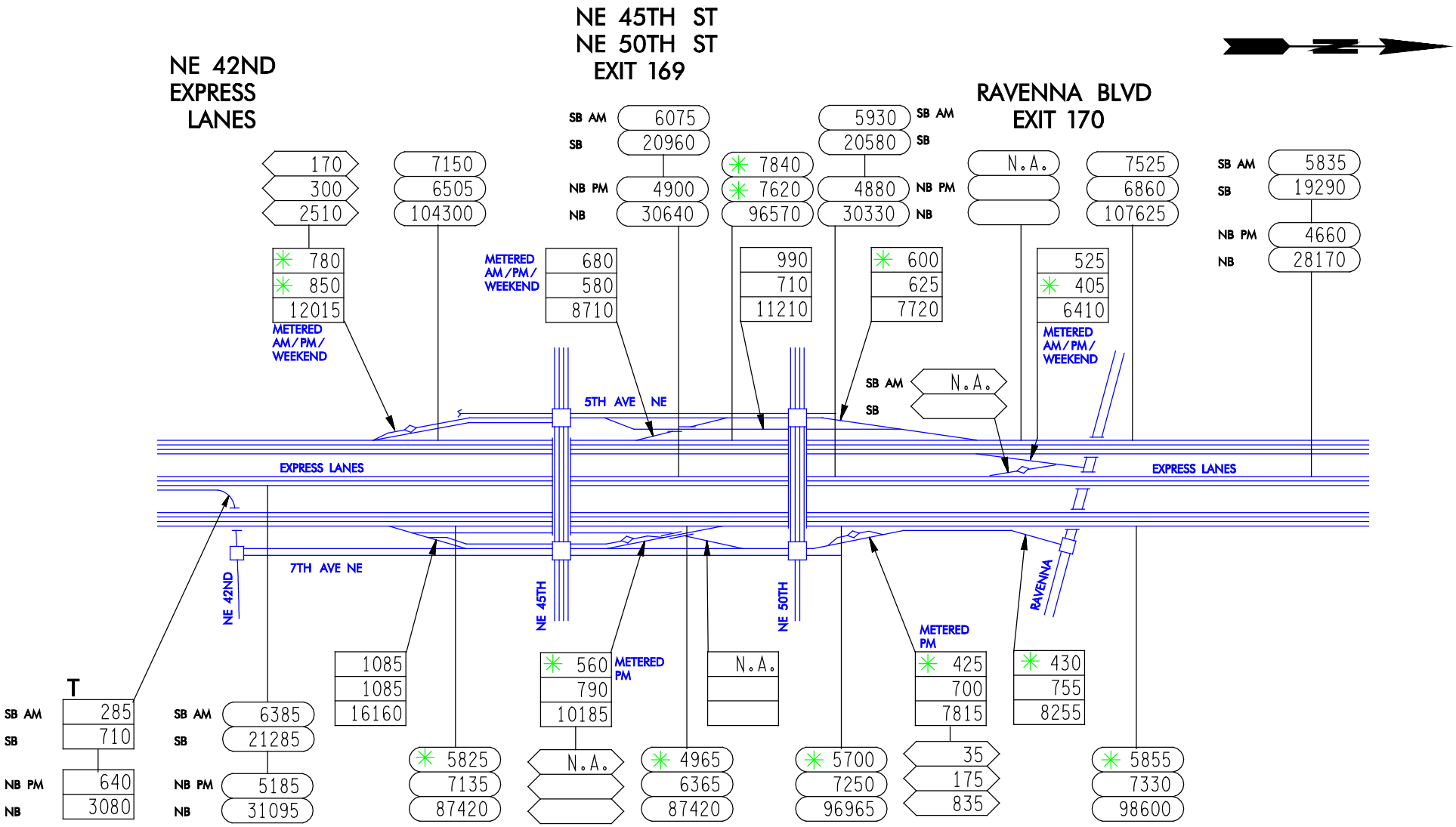

A.M.
P.M.
A.W.D.

SR 5

FLOW DIAGRAM

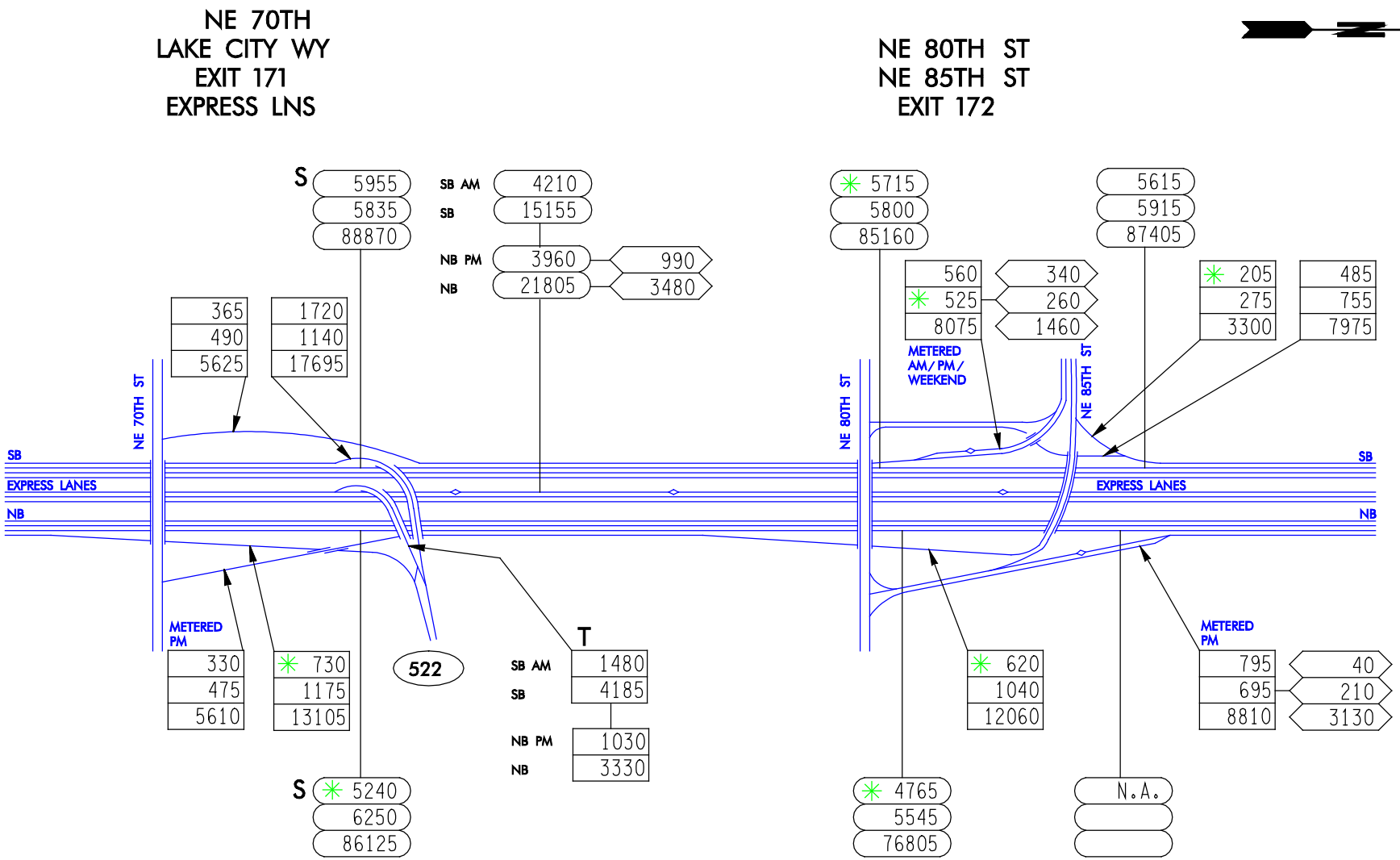

A.M.
P.M.
A.W.D.

SR 5

FLOW DIAGRAM

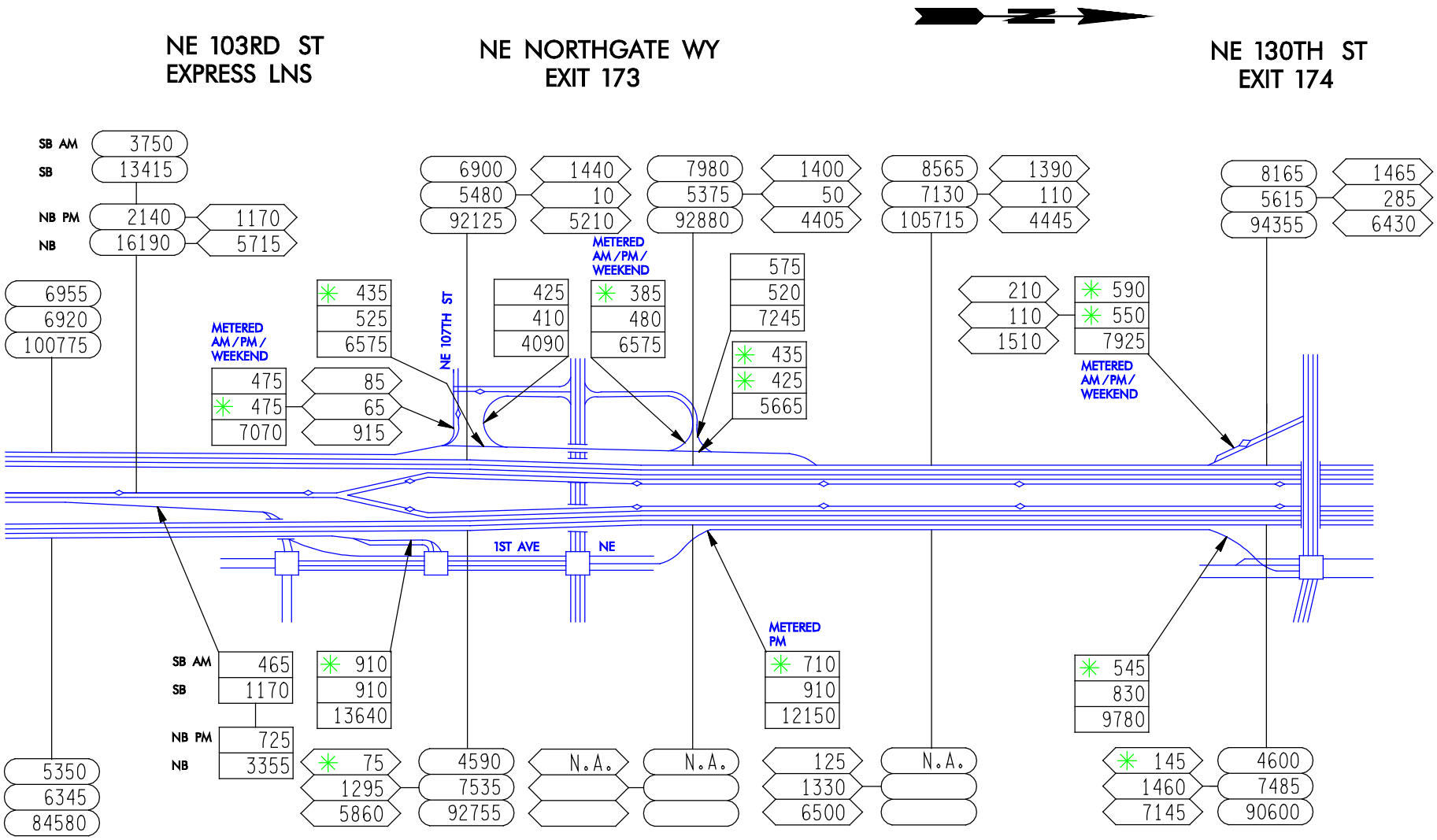

A.M.
P.M.
A.W.D.

SR 5

FLOW DIAGRAM

13 OF 19

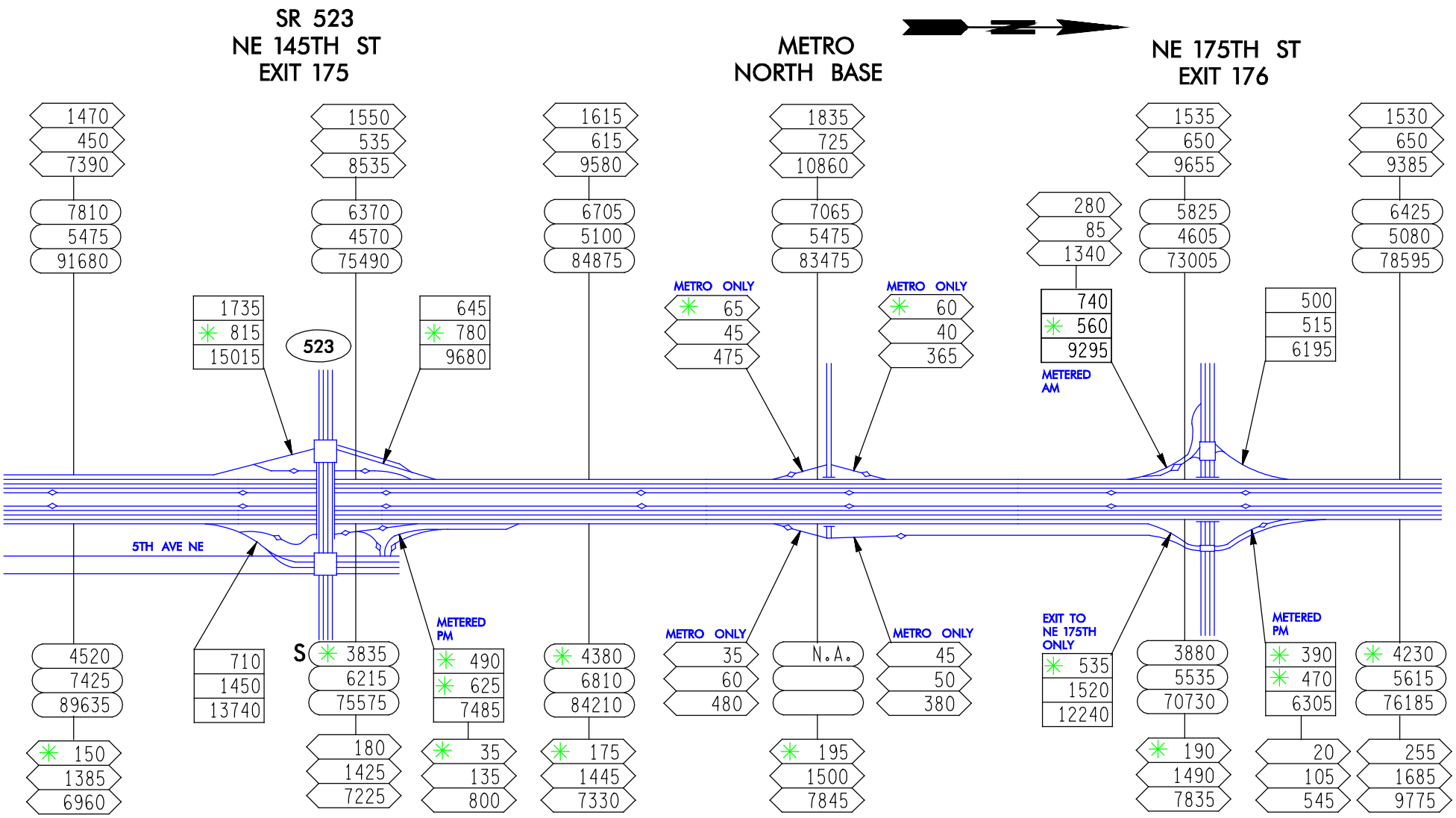

A.M.
P.M.
A.W.D.

SR 5

FLOW DIAGRAM

14 OF 19

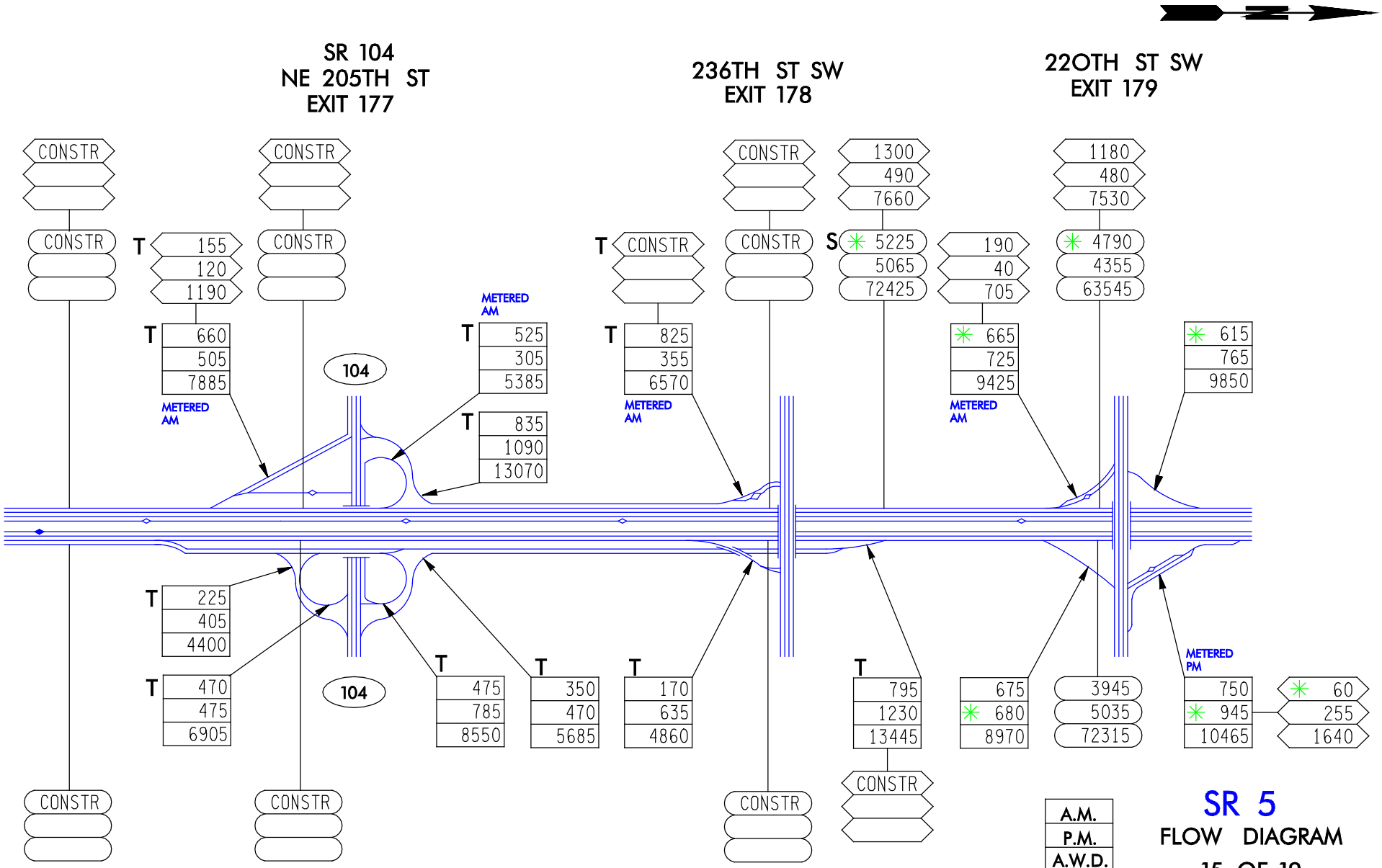

SR 5

FLOW DIAGRAM

15 OF 19

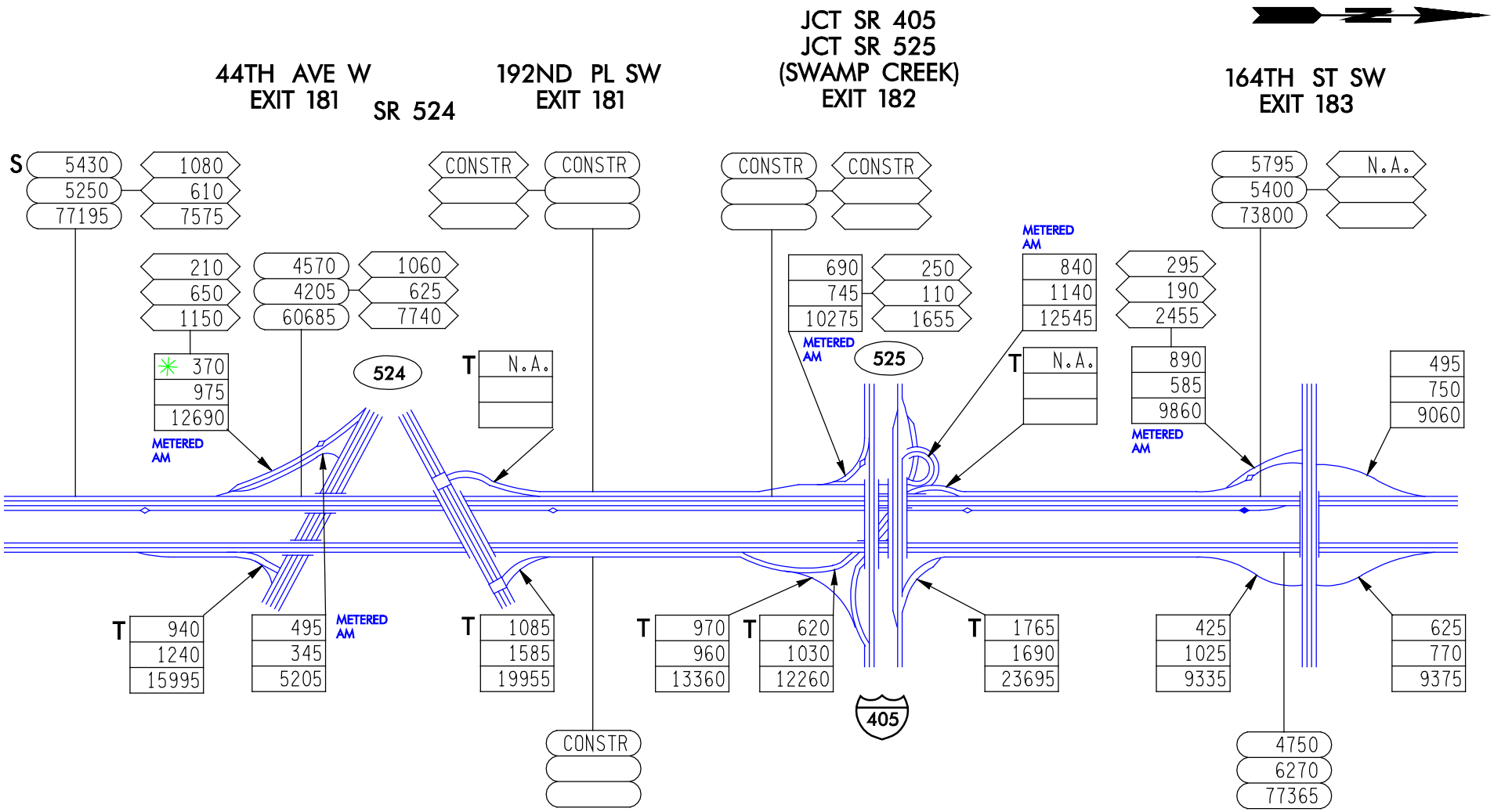

A.M.
P.M.
A.W.D.

SR 5

FLOW DIAGRAM

16 OF 19

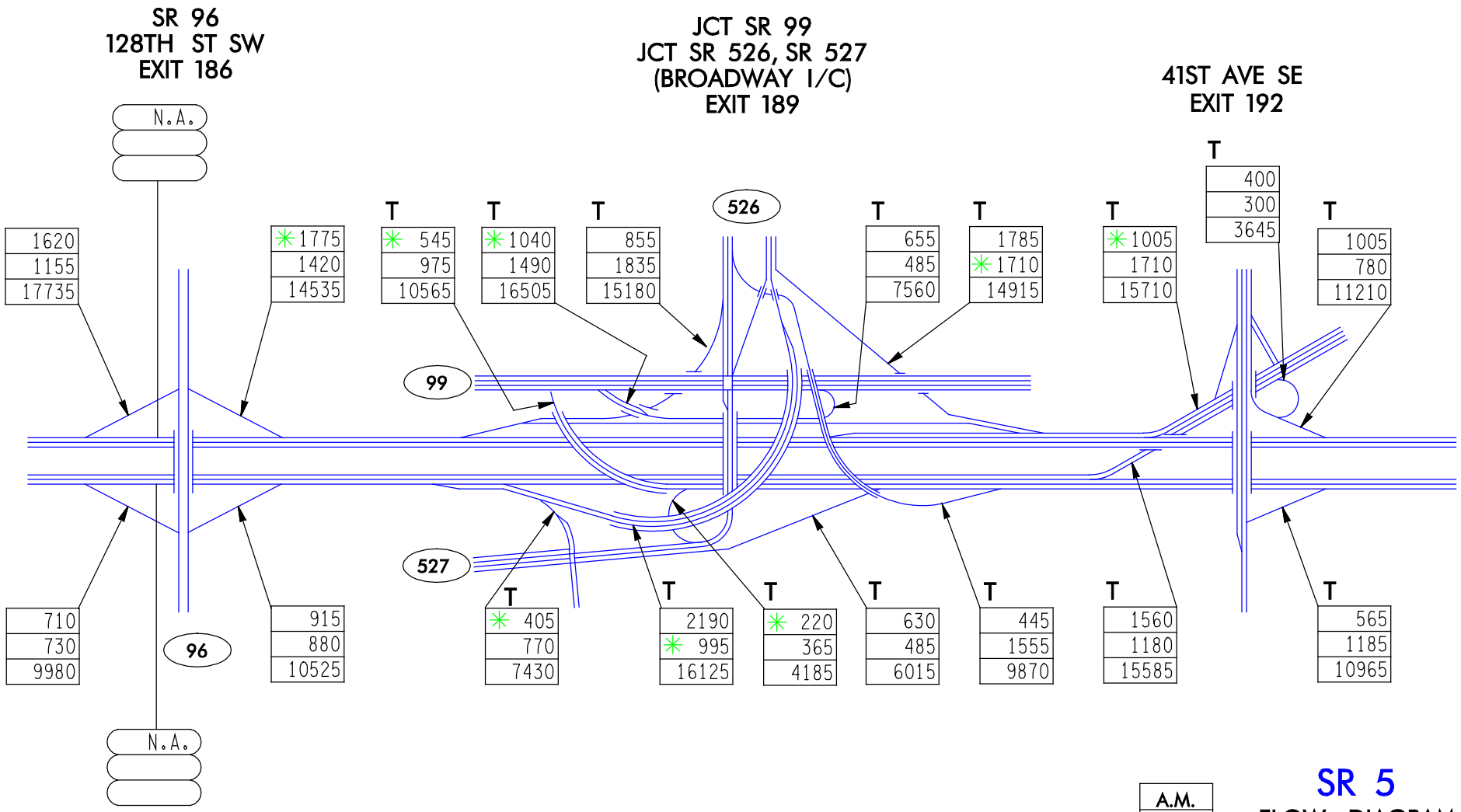

A.M.
P.M.
A.W.D.

SR 5

FLOW DIAGRAM

17 OF 19

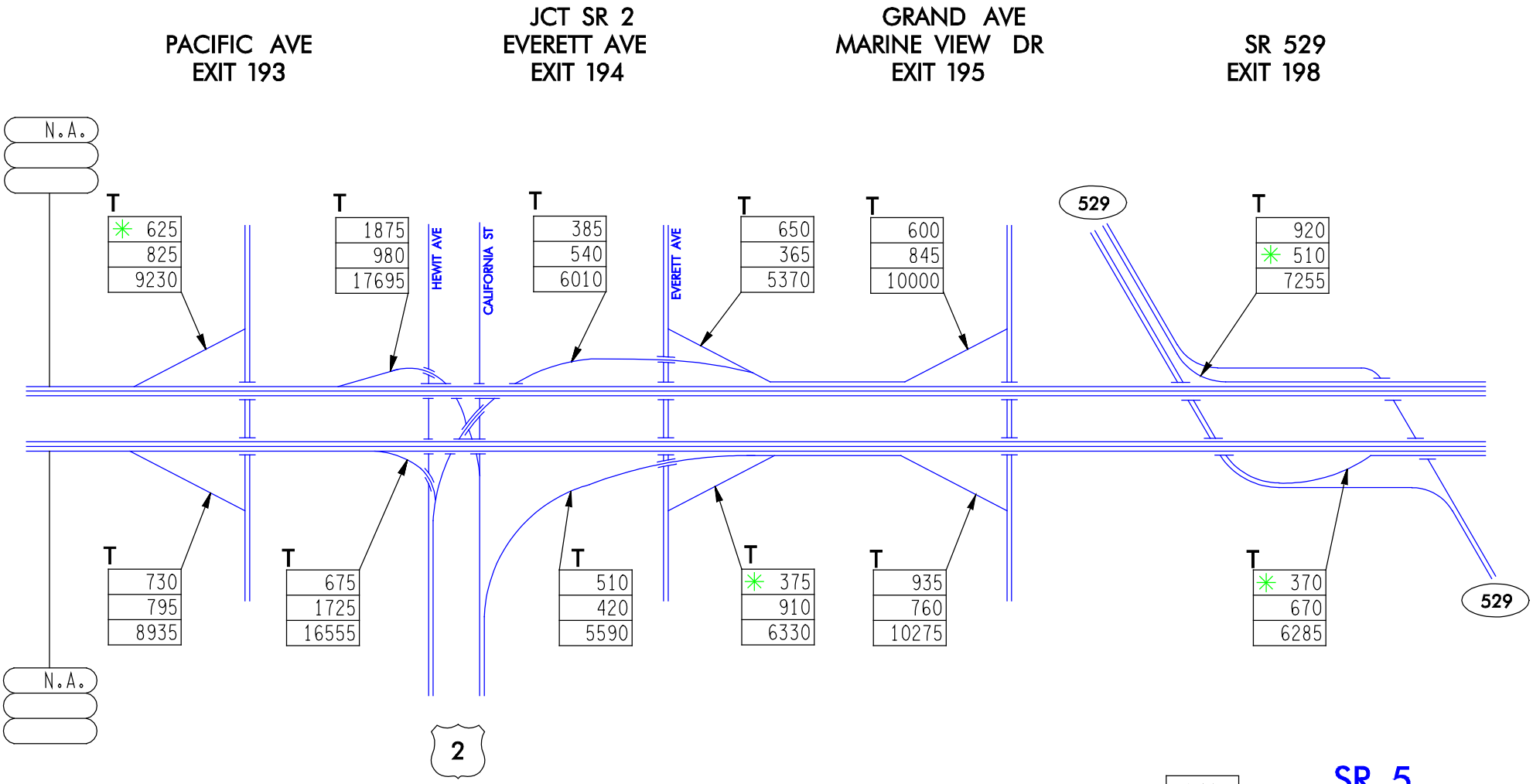

A.M.
P.M.
A.W.D.

SR 5

FLOW DIAGRAM

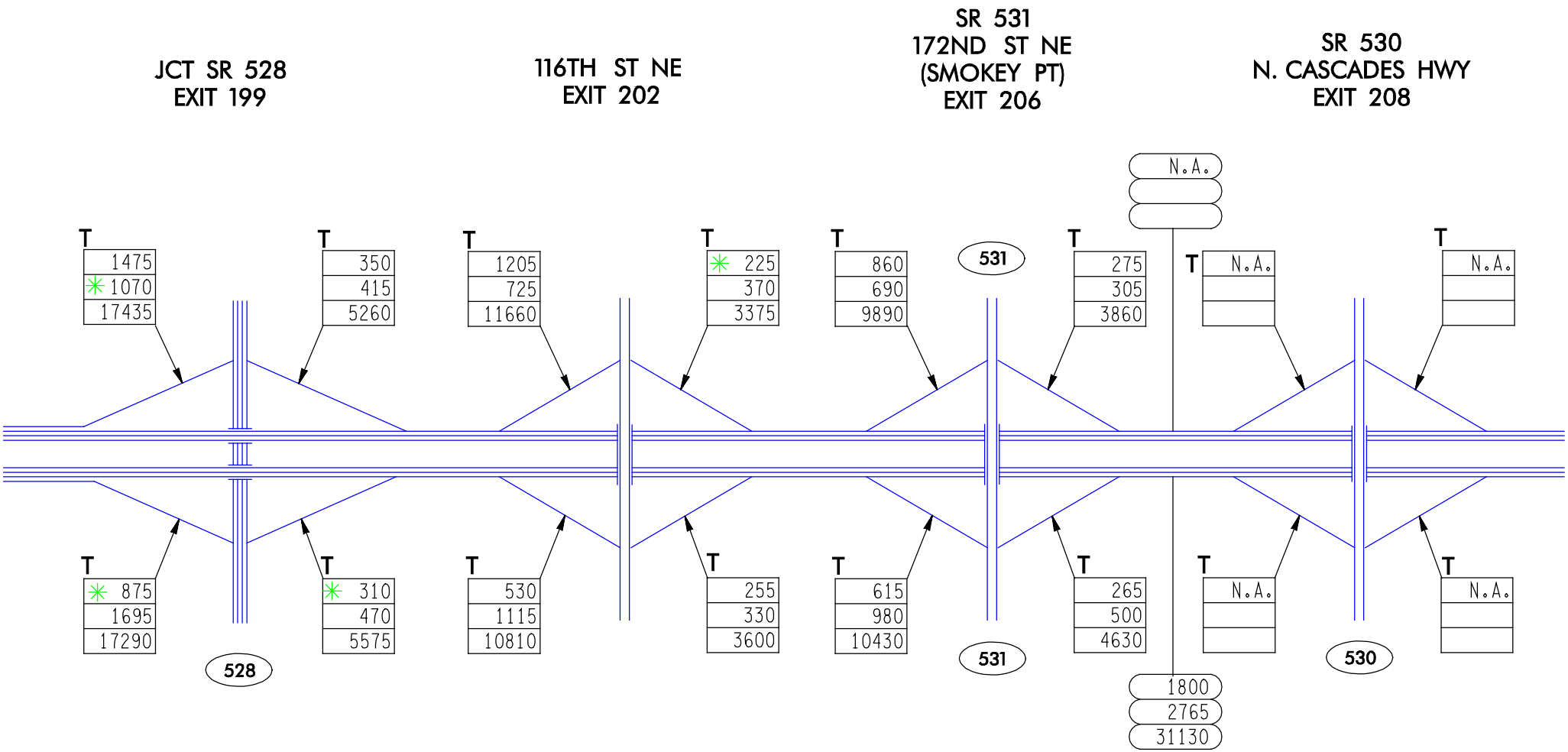

A.M.
P.M.
A.W.D.

SR 5

FLOW DIAGRAM

19 OF 19

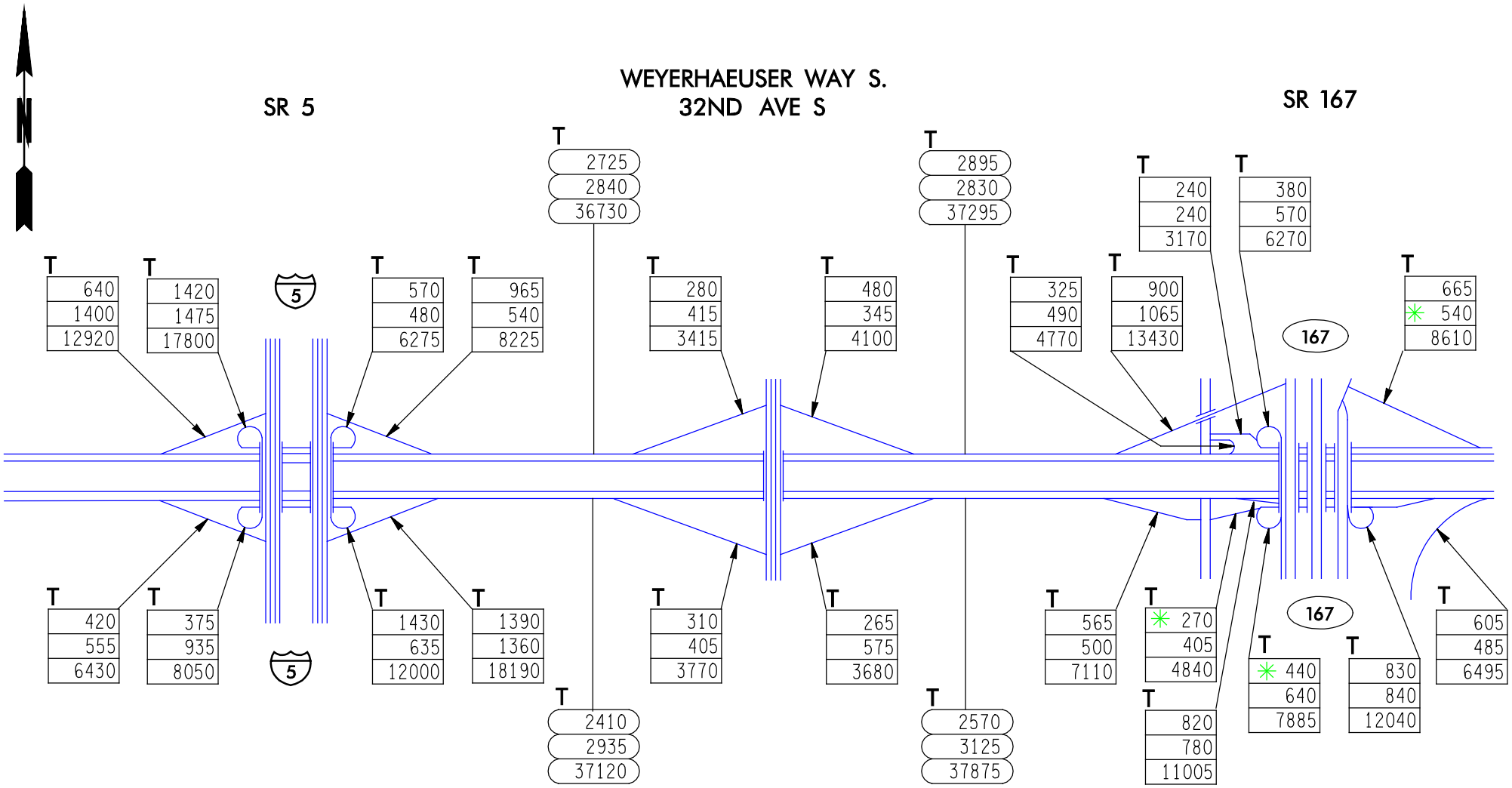

A.M.
P.M.
A.W.D.

SR 18

FLOW DIAGRAM

1 OF 2

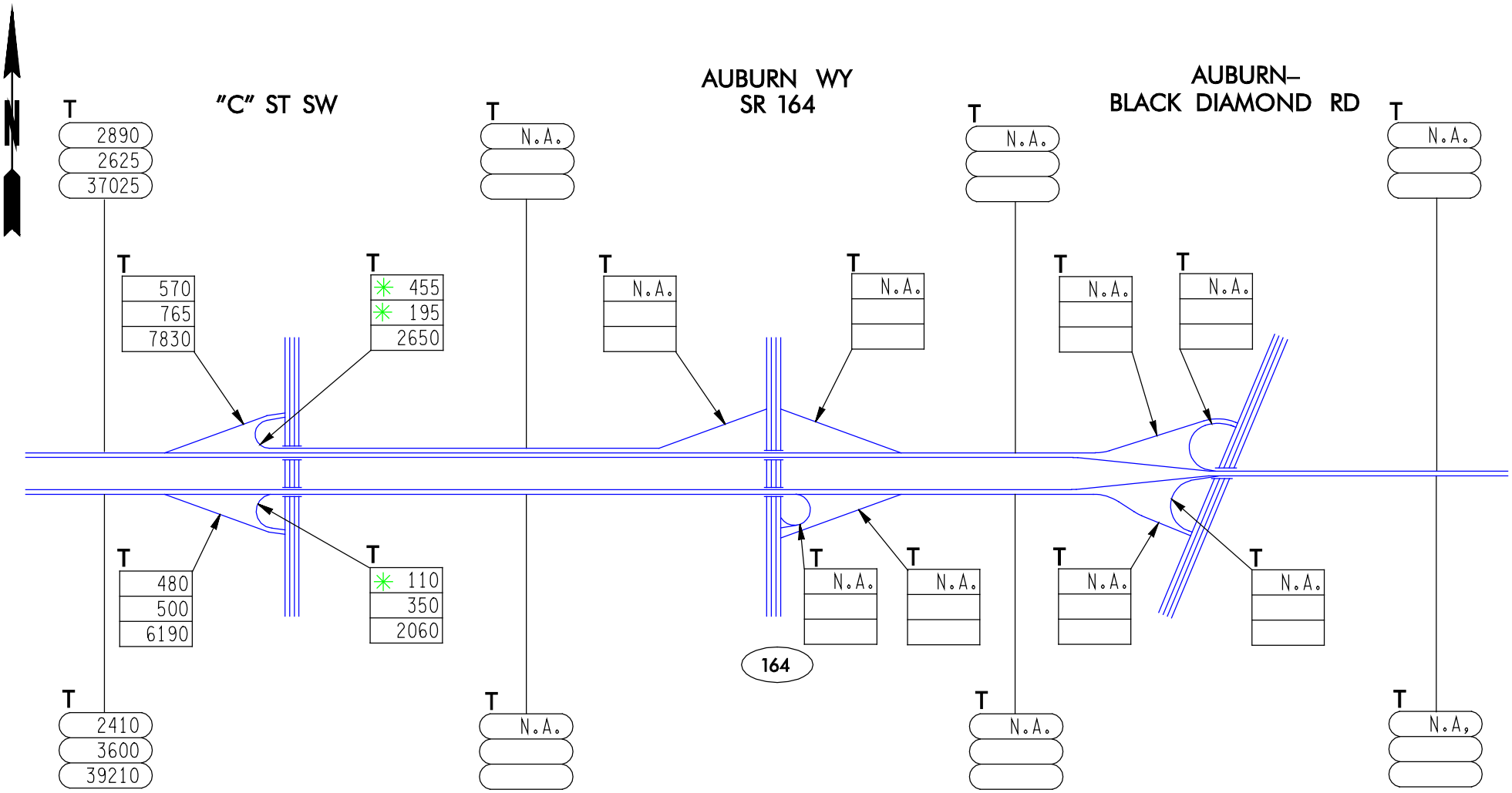

A.M.
P.M.
A.W.D.

SR 18

FLOW DIAGRAM

2 OF 2

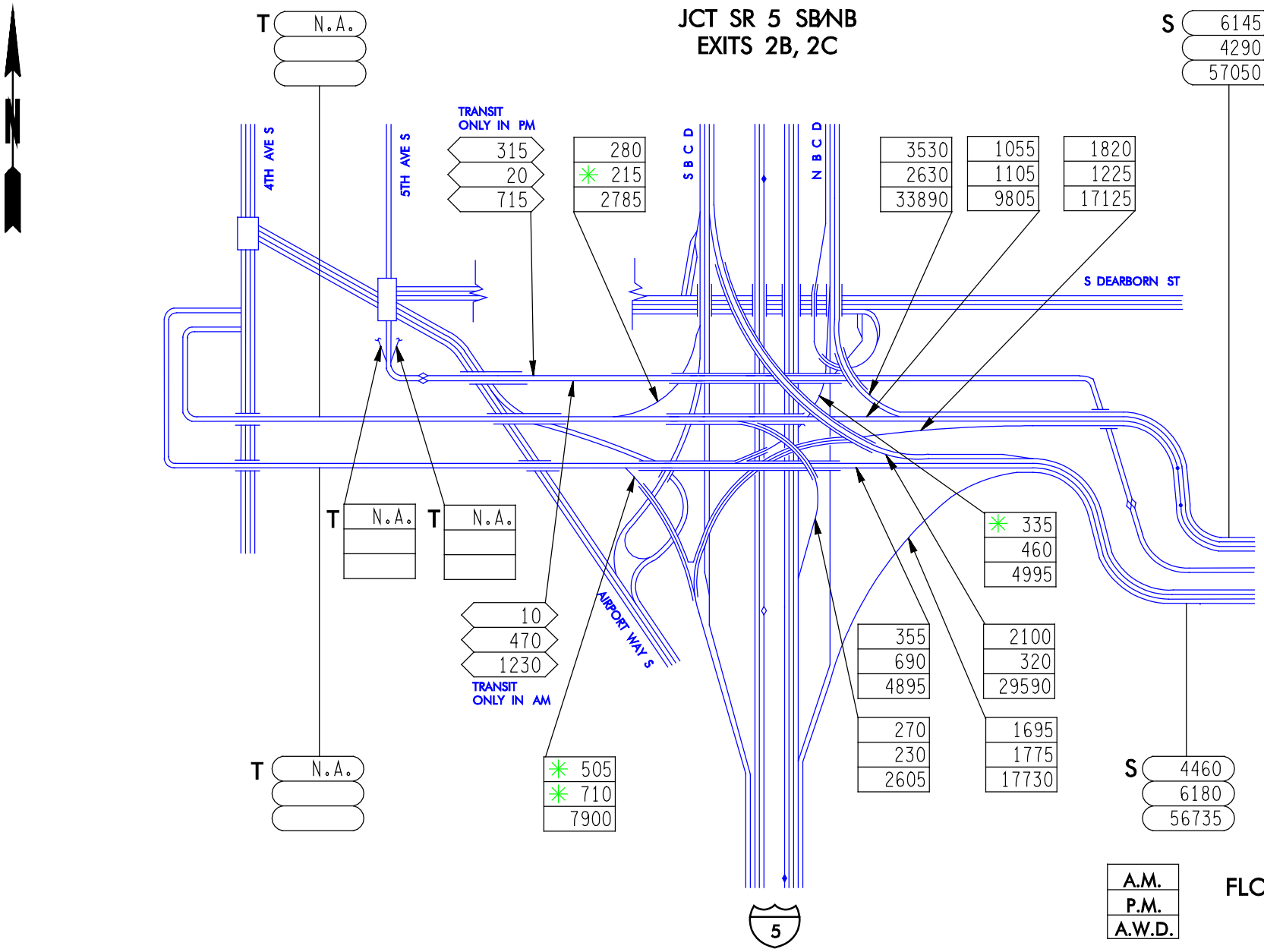

SR 90

FLOW DIAGRAM

1 OF 10

RAINIER AVE S
EXITS 3A, 3B

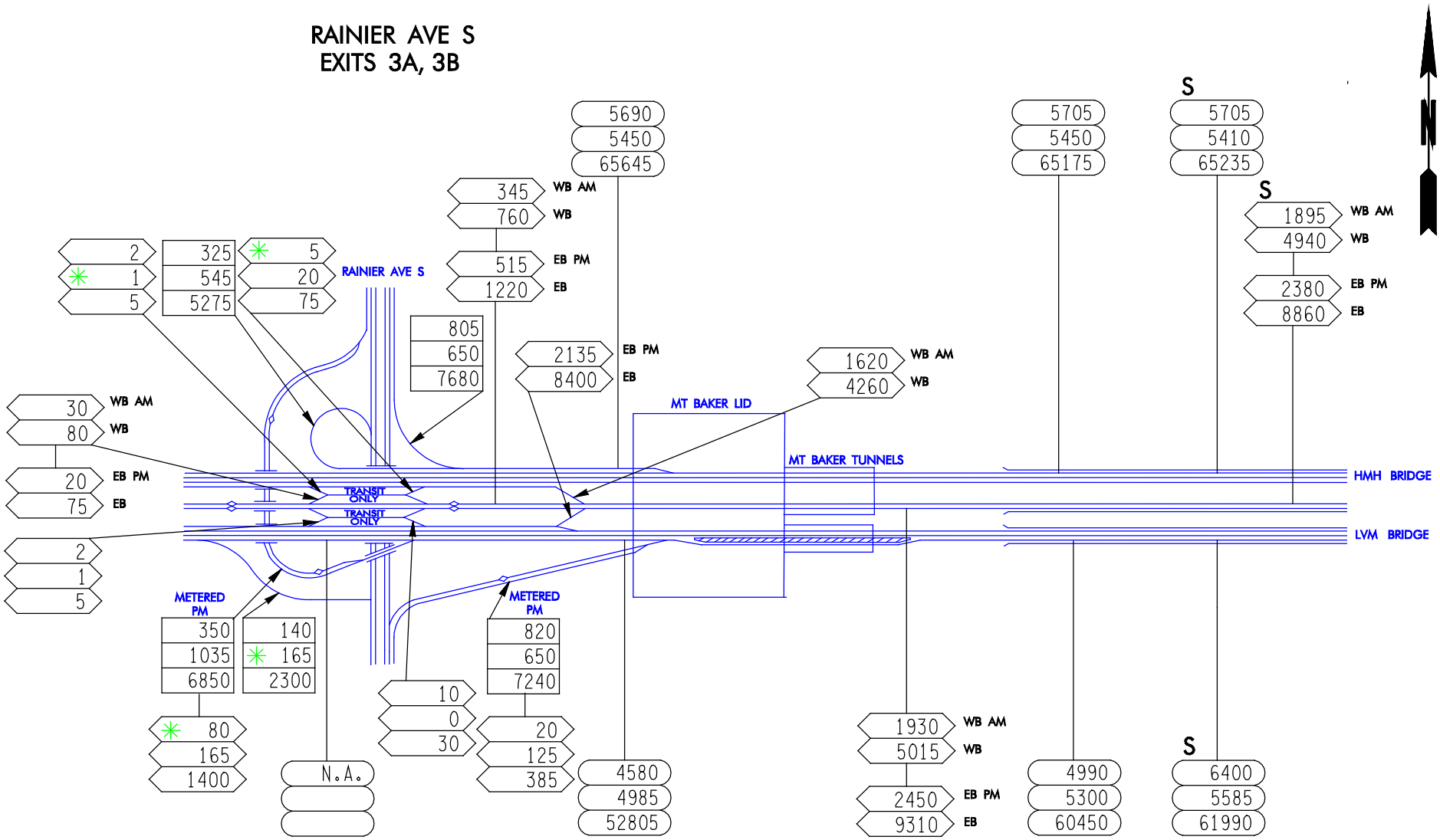

A.M.
P.M.
A.W.D.

SR 90
FLOW DIAGRAM
2 OF 10

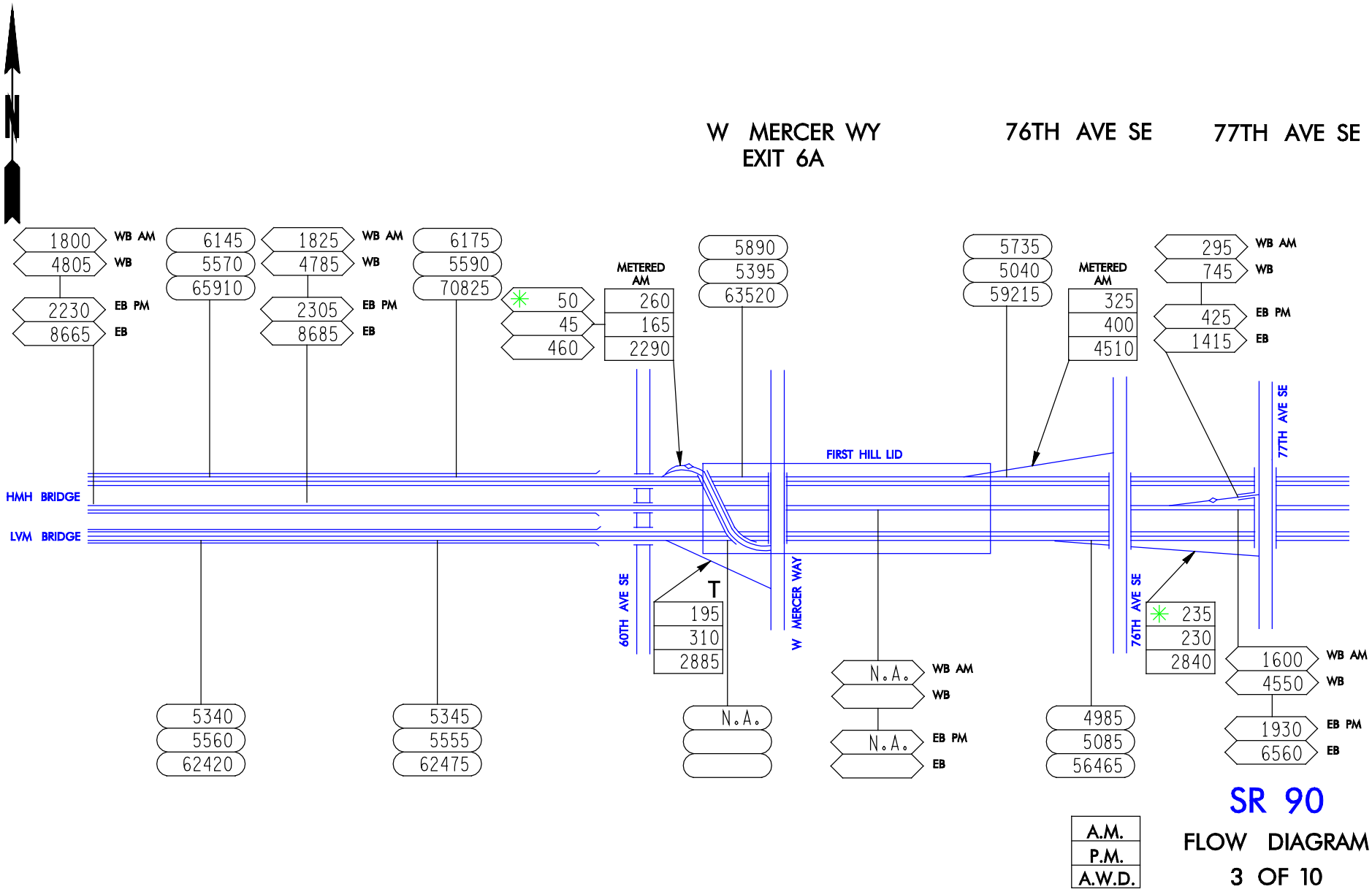

SR 90

FLOW DIAGRAM

3 OF 10

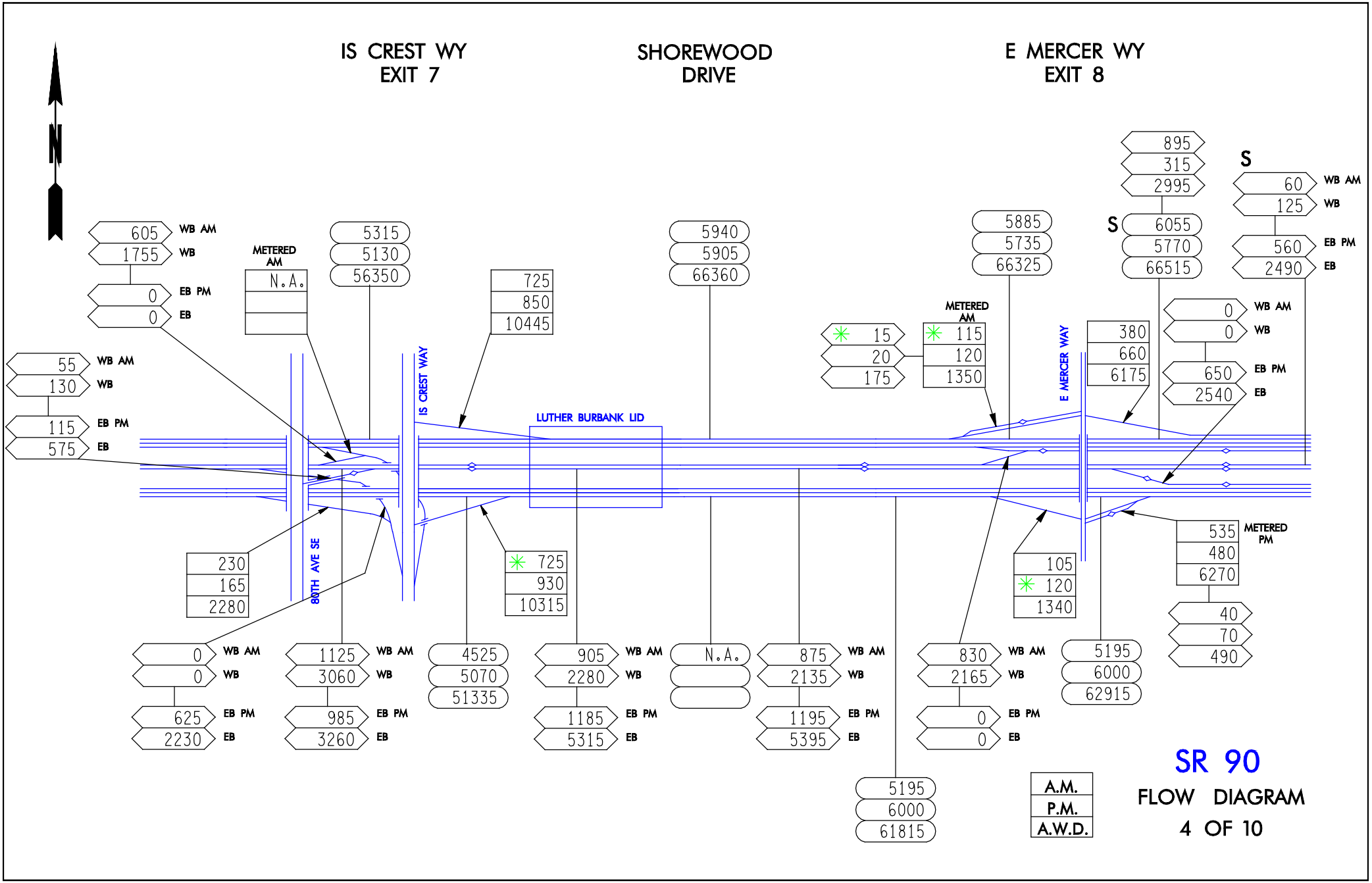
IS CREST WY
EXIT 7
SHOREWOOD
DRIVE
E MERCER WY
EXIT 8
N
605 WB AM
1755 WB
0 EB PM
0 EB
55 WB AM
130 WB
115 EB PM
575 EB
METERED AM
N.A.
5315
5130
56350
725
850
10445
5940
5905
66360
5885
5735
66325
METERED AM
15
20
175
115
120
1350
895
315
2995
S
6055
5770
66515
S
60 WB AM
125 WB
560 EB PM
2490 EB
0 WB AM
0 WB
650 EB PM
2540 EB
380
660
6175
E MERCER WAY
IS CREST WAY
LUTHER BURBANK LID
80TH AVE SE
230
165
2280
725
930
10315
105
120
1340
535
480
6270
METERED PM
40
70
490
0 WB AM
0 WB
625 EB PM
2230 EB
1125 WB AM
3060 WB
985 EB PM
3260 EB
4525
5070
51335
905 WB AM
2280 WB
1185 EB PM
5315 EB
N.A.
875 WB AM
2135 WB
1195 EB PM
5395 EB
830 WB AM
2165 WB
0 EB PM
0 EB
5195
6000
62915
5195
6000
61815
A.M.
P.M.
A.W.D.
SR 90
FLOW DIAGRAM
4 OF 10

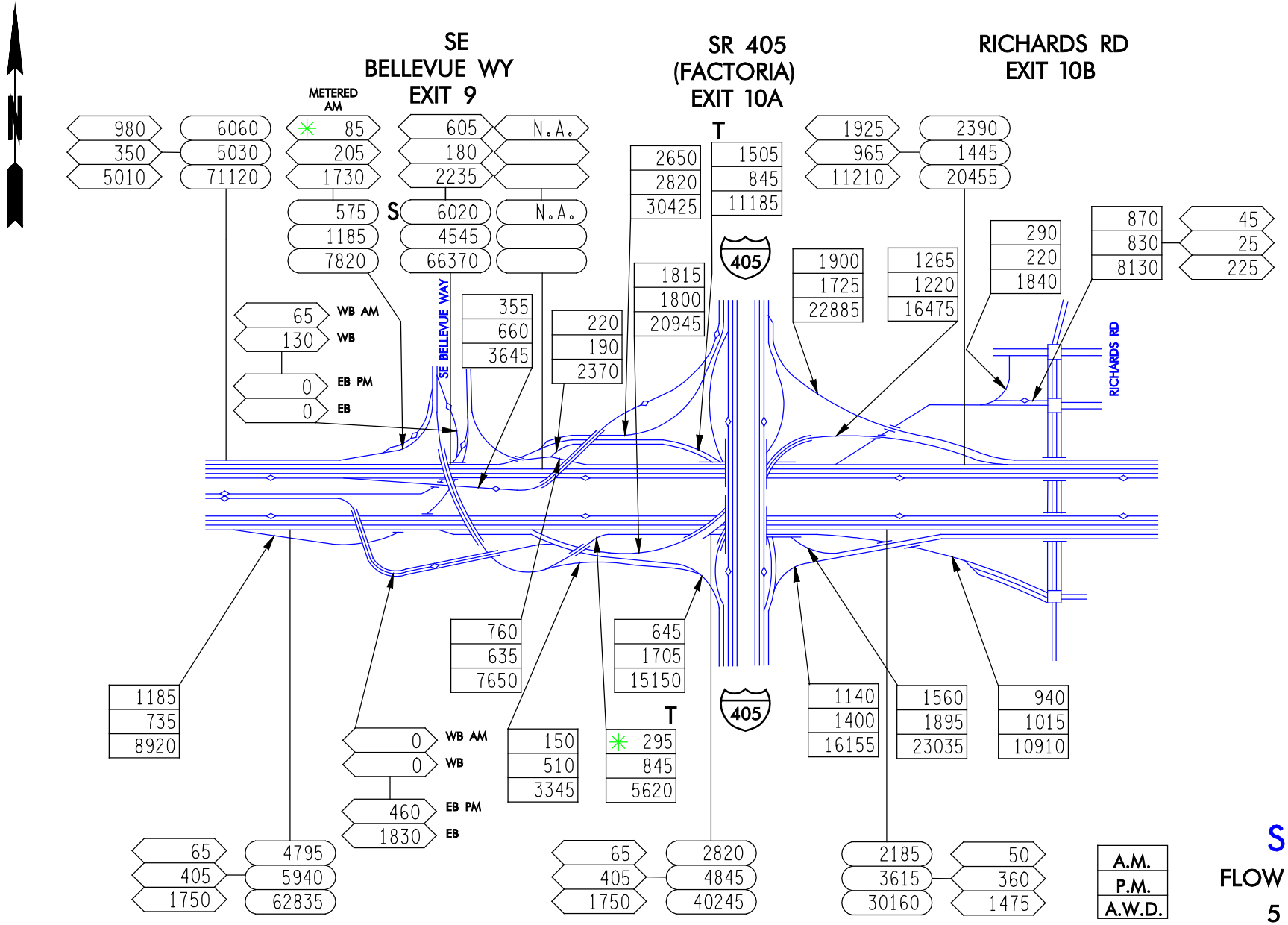

SR 90

FLOW DIAGRAM

5 OF 10

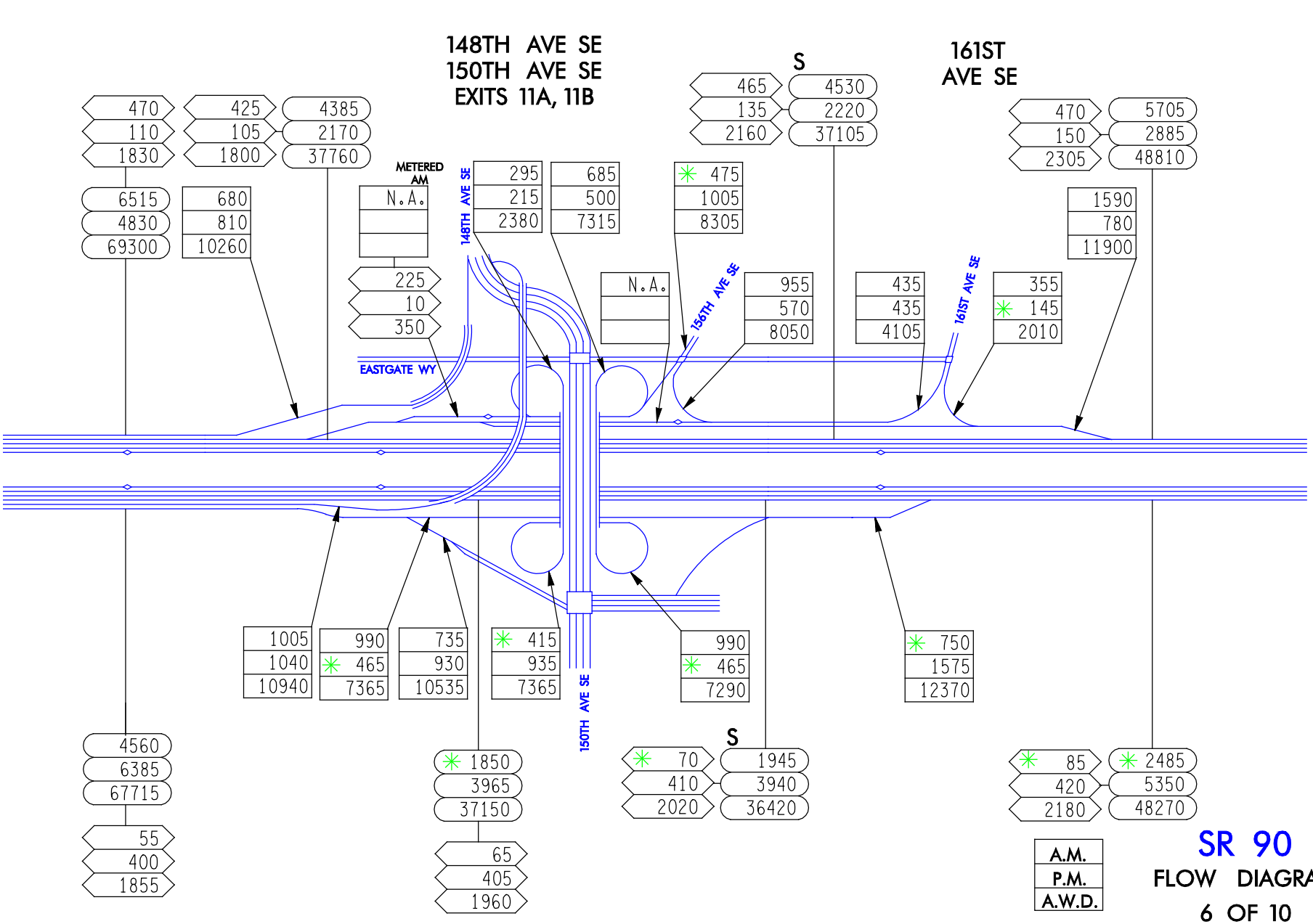
148TH AVE SE
150TH AVE SE
EXITS 11A, 11B
161ST
AVE SE
S
470
110
1830
425
105
1800
4385
2170
37760
465
135
2160
4530
2220
37105
470
150
2305
5705
2885
48810
METERED
AM
N.A.
295
215
2380
685
500
7315
475
1005
8305
6515
4830
69300
680
810
10260
1590
780
11900
225
10
350
N.A.
955
570
8050
435
435
4105
355
145
2010
148TH AVE SE
156TH AVE SE
161ST AVE SE
EASTGATE WY
1005
1040
10940
990
465
7365
735
930
10535
415
935
7365
990
465
7290
750
1575
12370
150TH AVE SE
4560
6385
67715
55
400
1855
1850
3965
37150
65
405
1960
S
70
410
2020
1945
3940
36420
85
420
2180
2485
5350
48270
A.M.
P.M.
A.W.D.
SR 90
FLOW DIAGRAM
6 OF 10

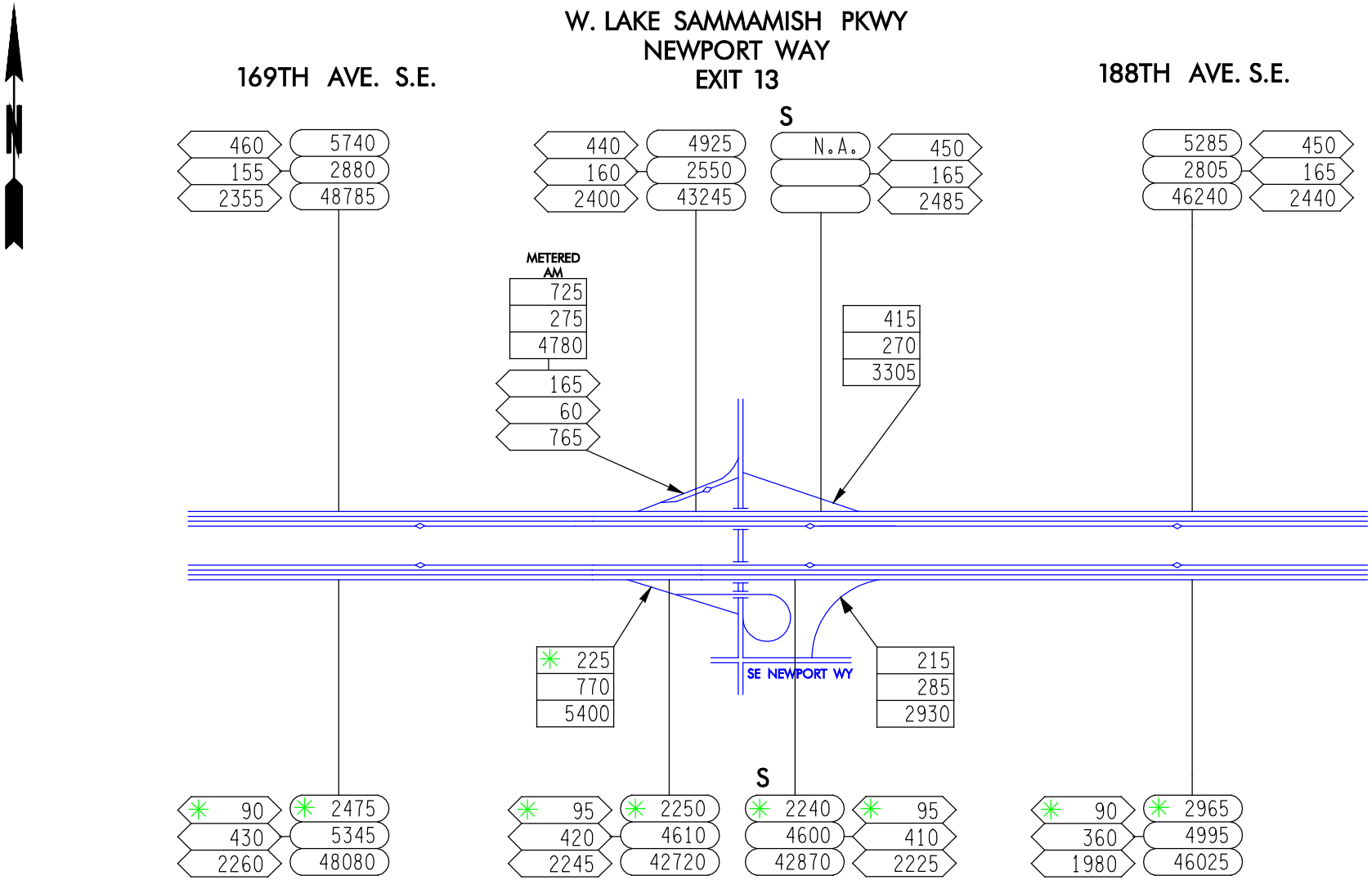

A.M.
P.M.
A.W.D.

SR 90

FLOW DIAGRAM

7 OF 10

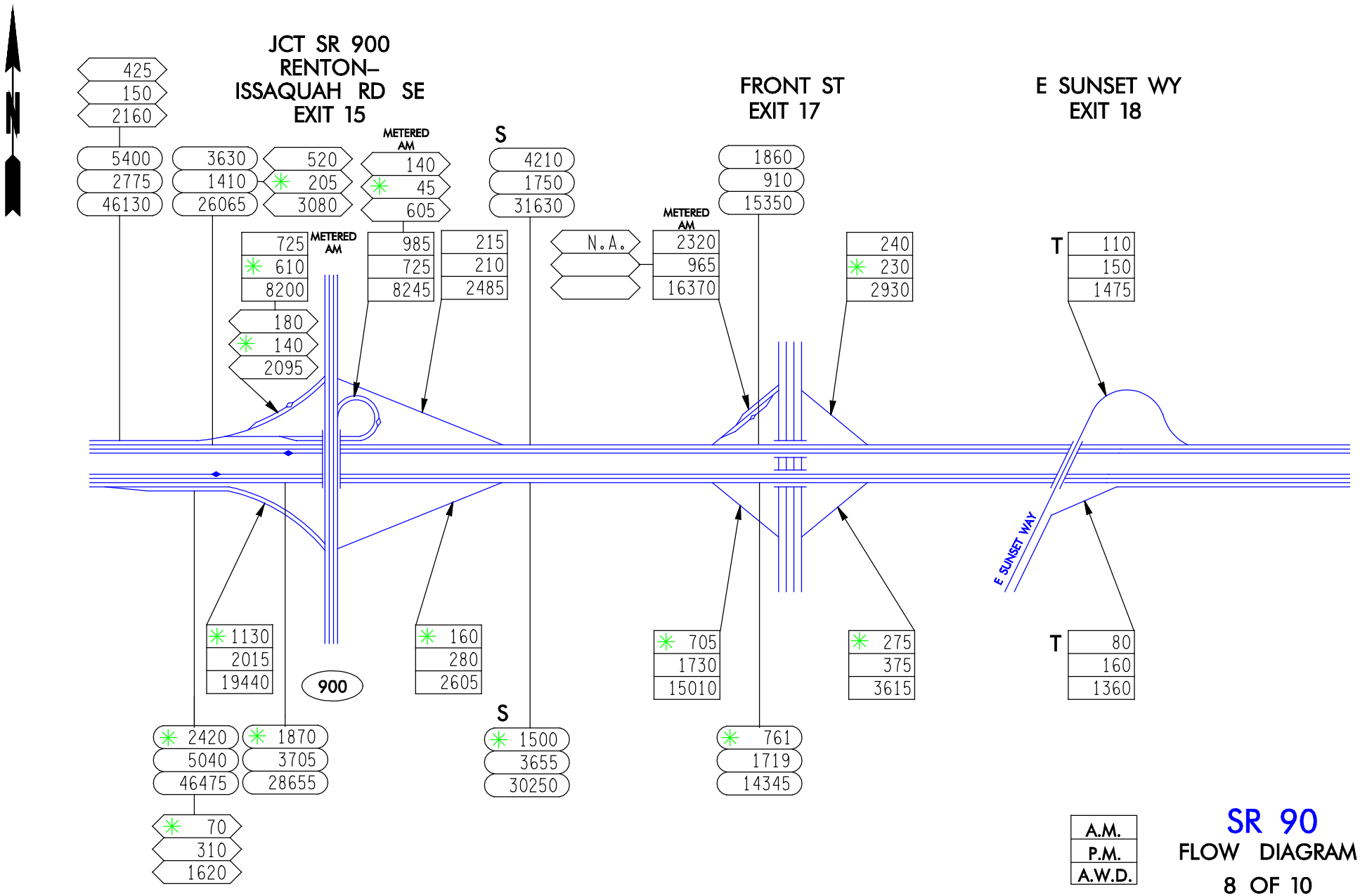

SR 90

FLOW DIAGRAM

8 OF 10

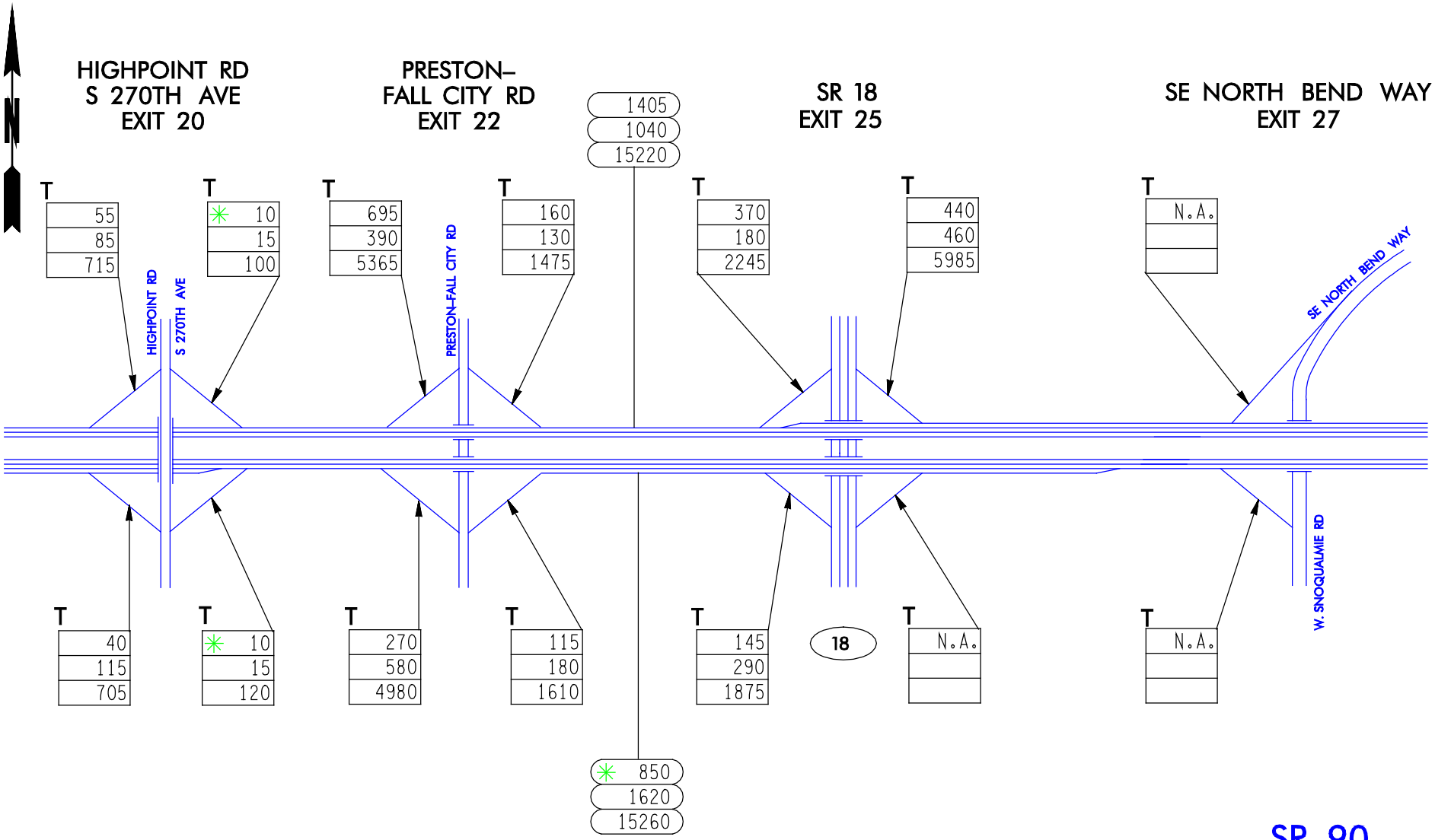

A.M.
P.M.
A.W.D.

SR 90

FLOW DIAGRAM

9 OF 10

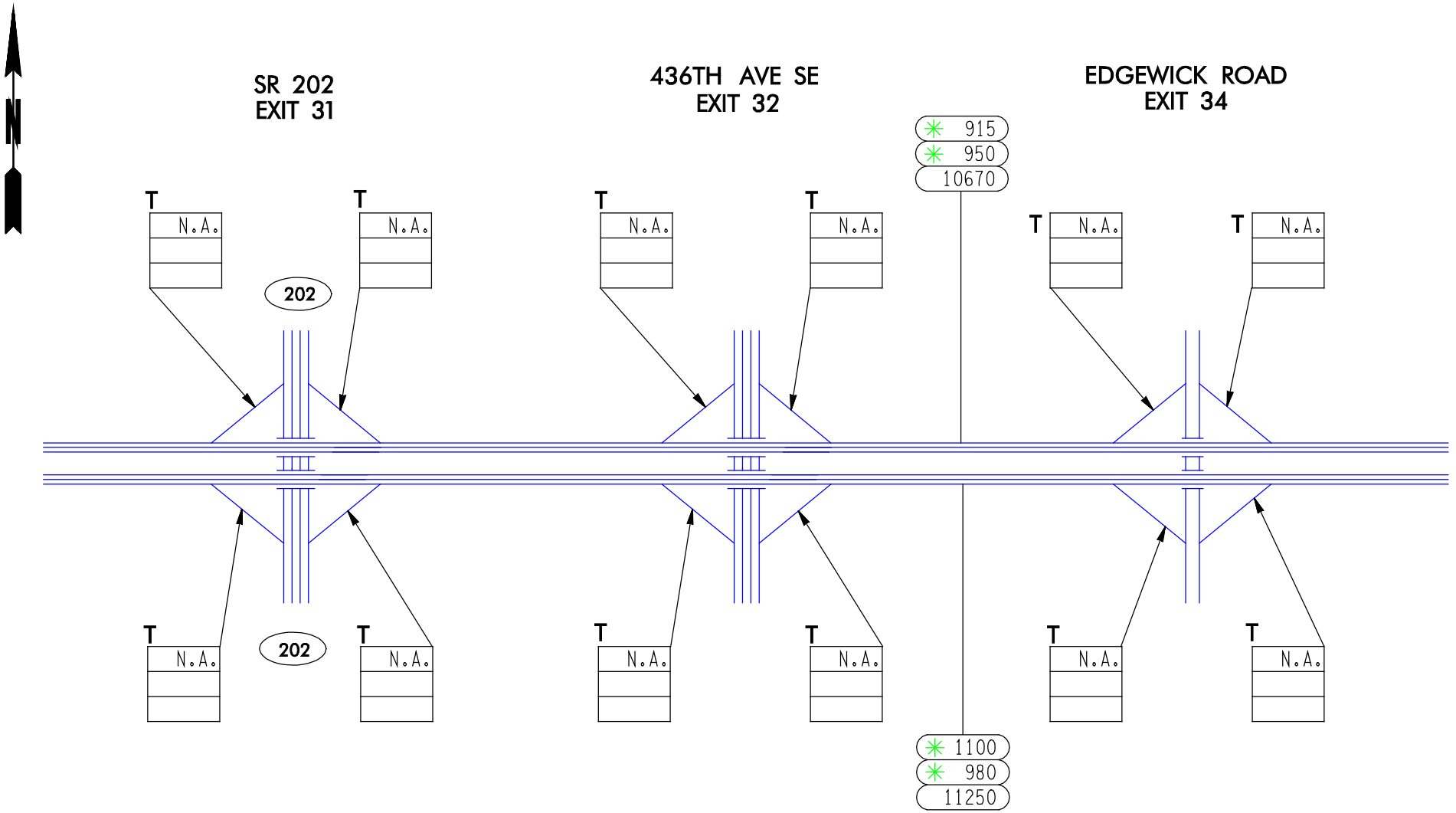

A.M.
P.M.
A.W.D.

SR 90

FLOW DIAGRAM

10 OF 10

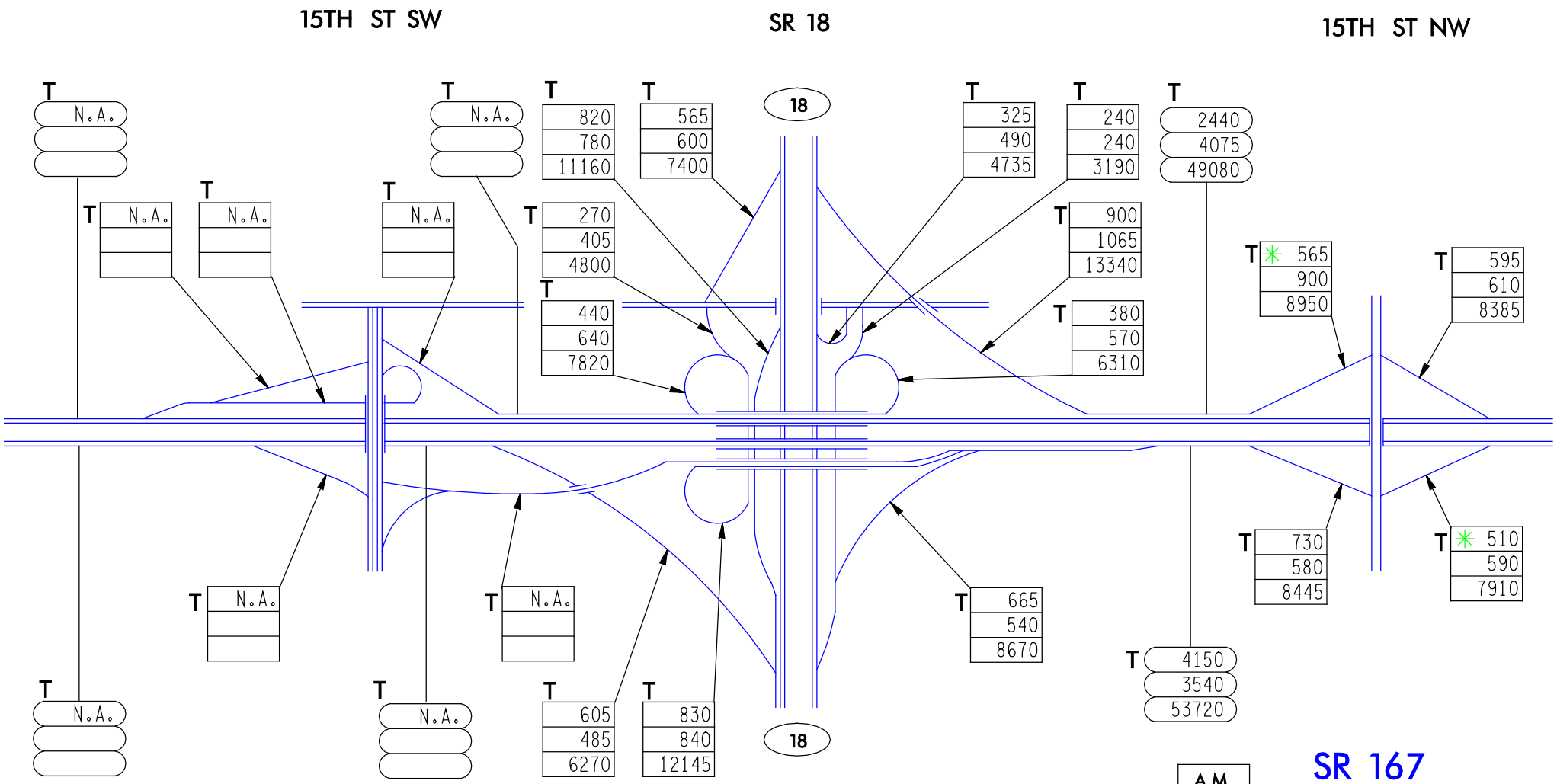

A.M.
P.M.
A.W.D.

SR 167

FLOW DIAGRAM

1 OF 3

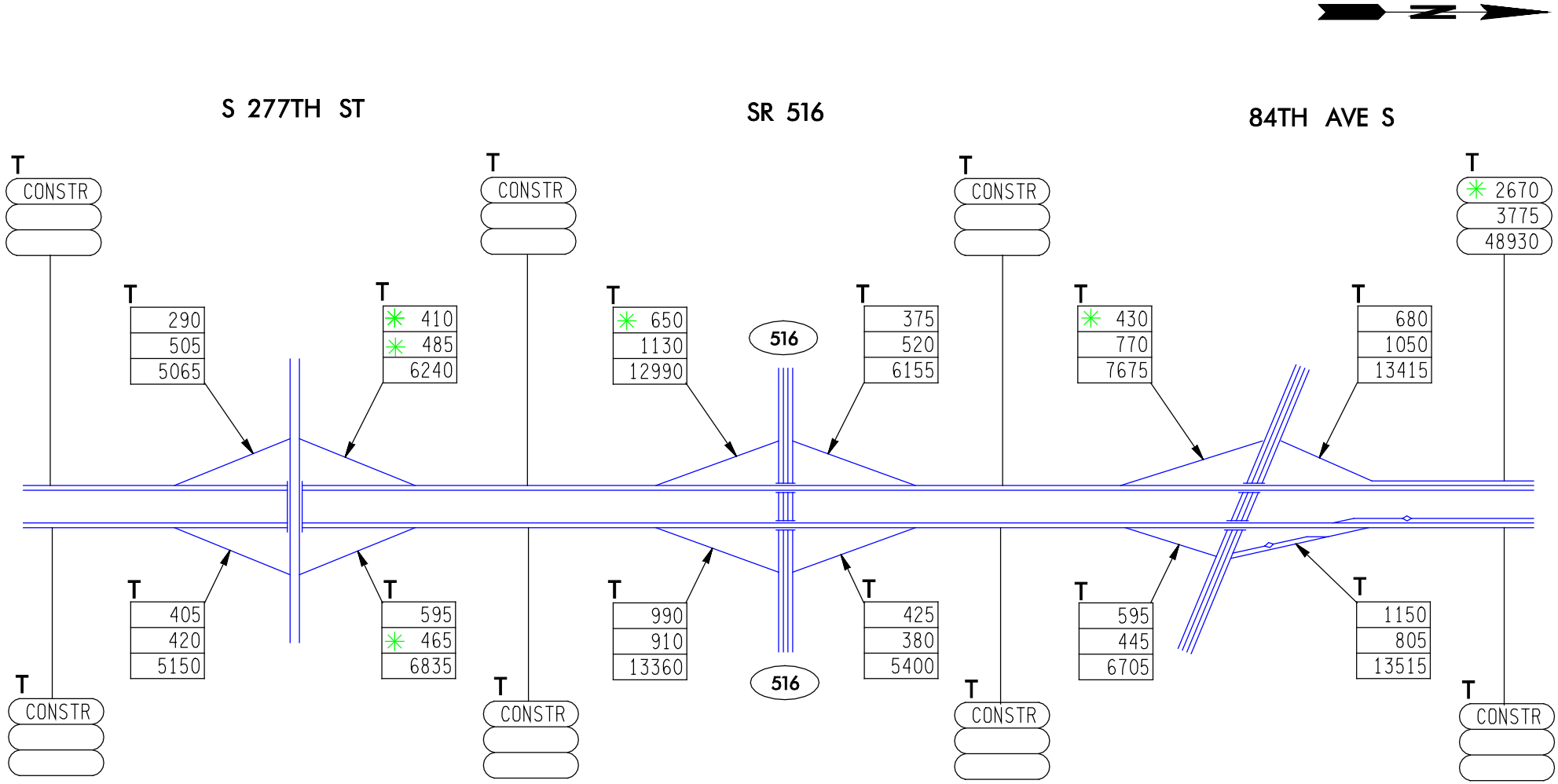

A.M.
P.M.
A.W.D.

SR 167

FLOW DIAGRAM

2 OF 3

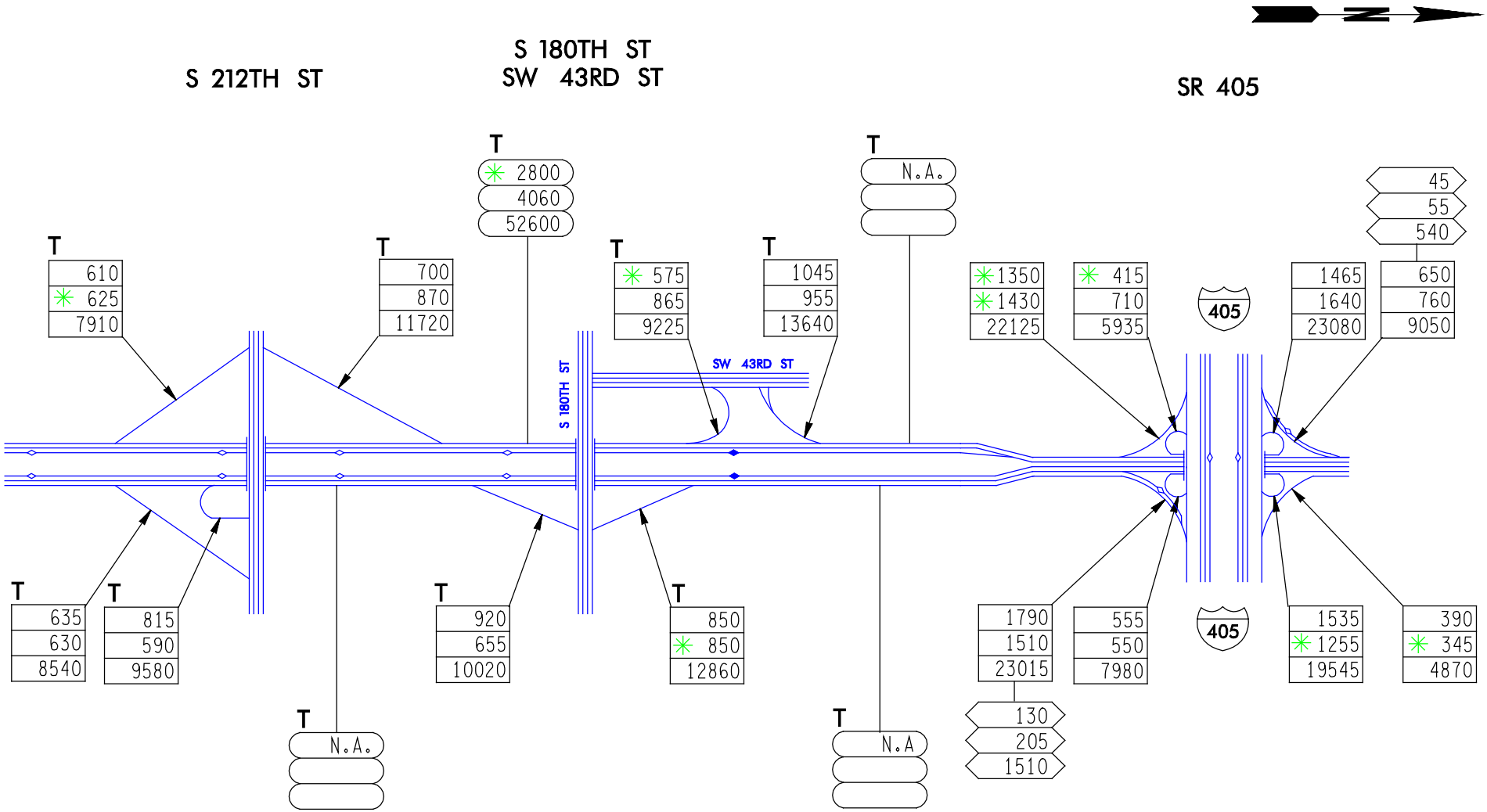

A.M.
P.M.
A.W.D.

SR 167

FLOW DIAGRAM

3 OF 3

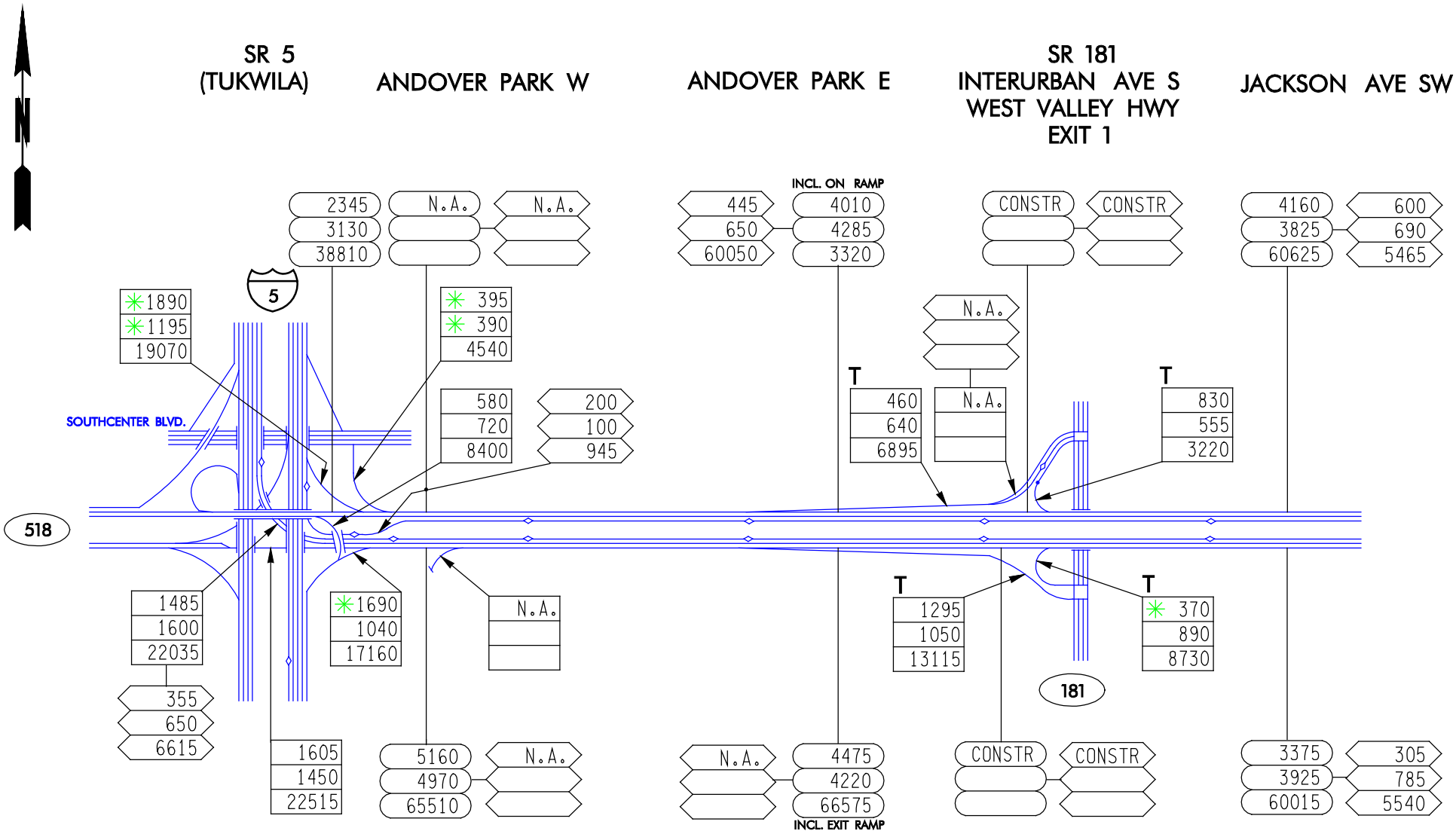

SR 405
FLOW DIAGRAM
1 OF 14

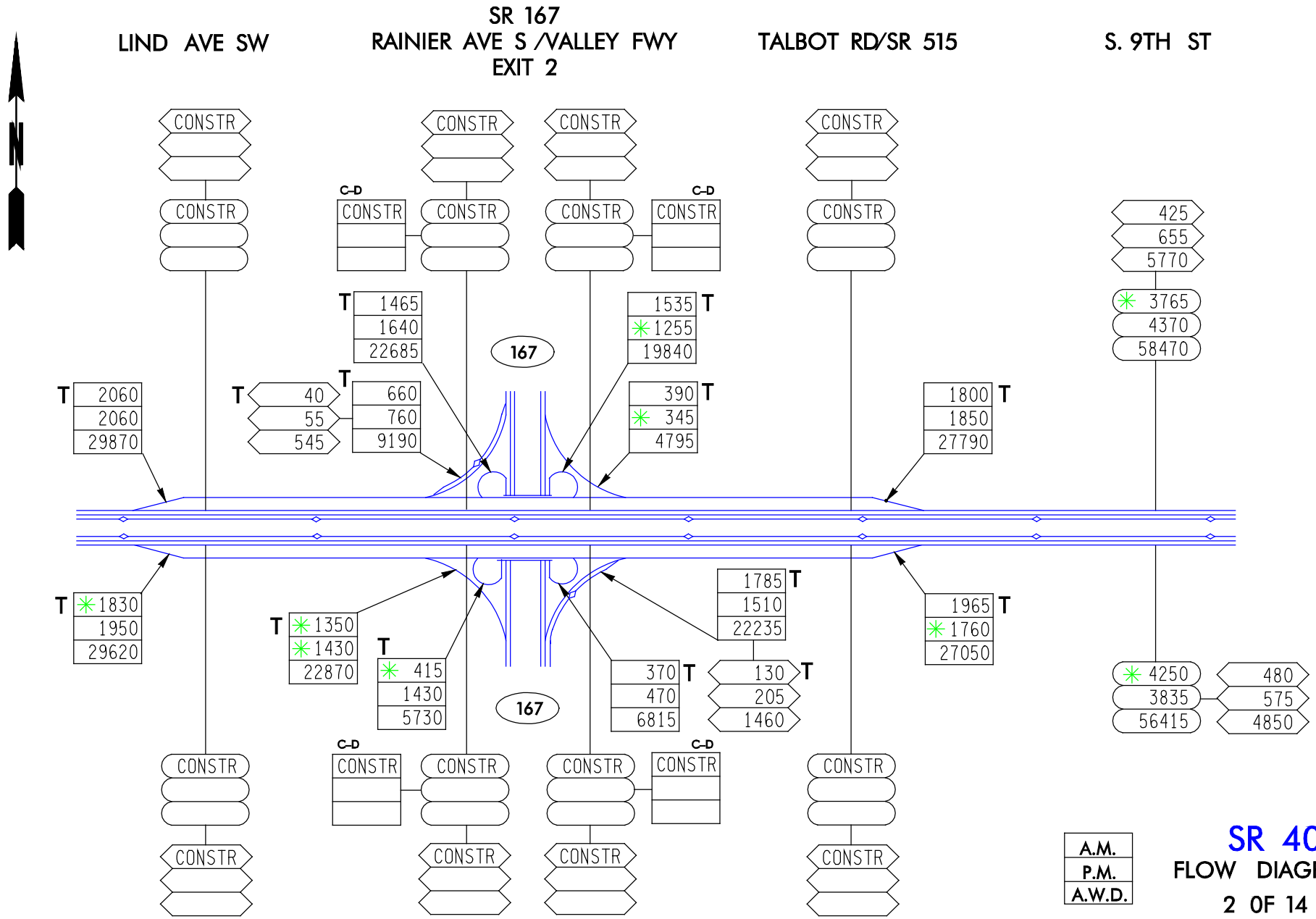

SR 405

FLOW DIAGRAM

2 OF 14

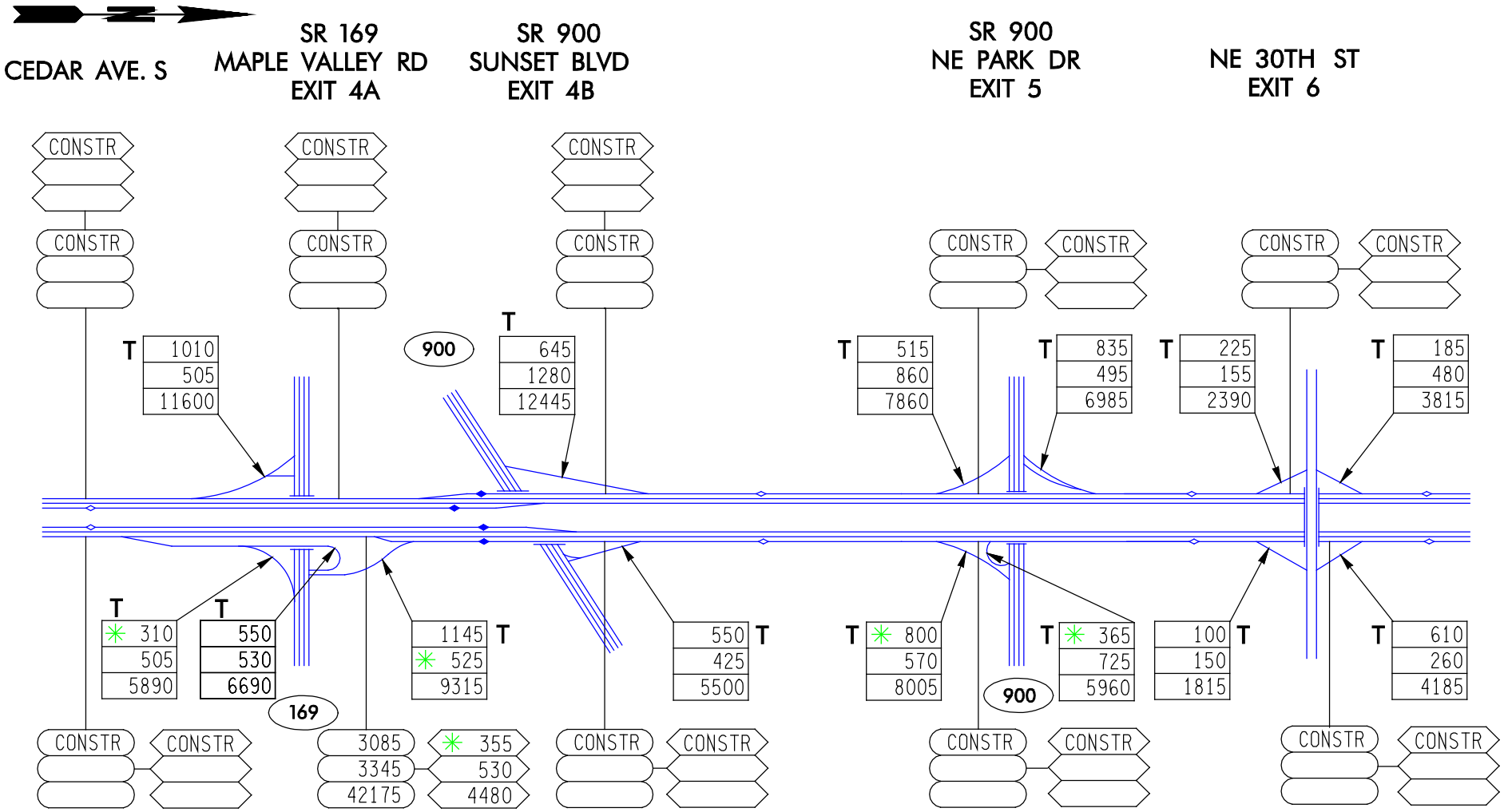

A.M.
P.M.
A.W.D.

SR 405
FLOW DIAGRAM

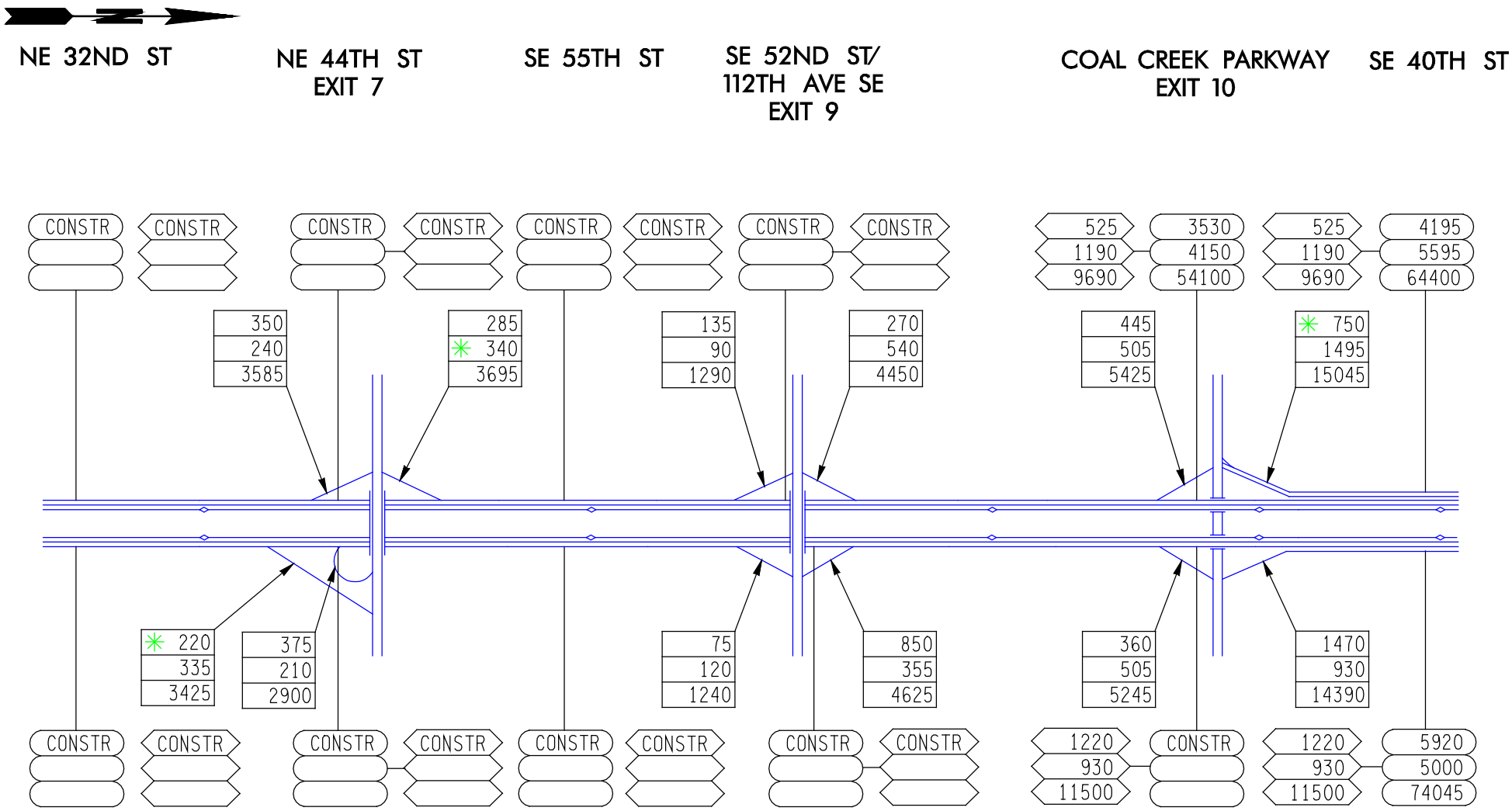

A.M.
P.M.
A.W.D.

SR 405

FLOW DIAGRAM

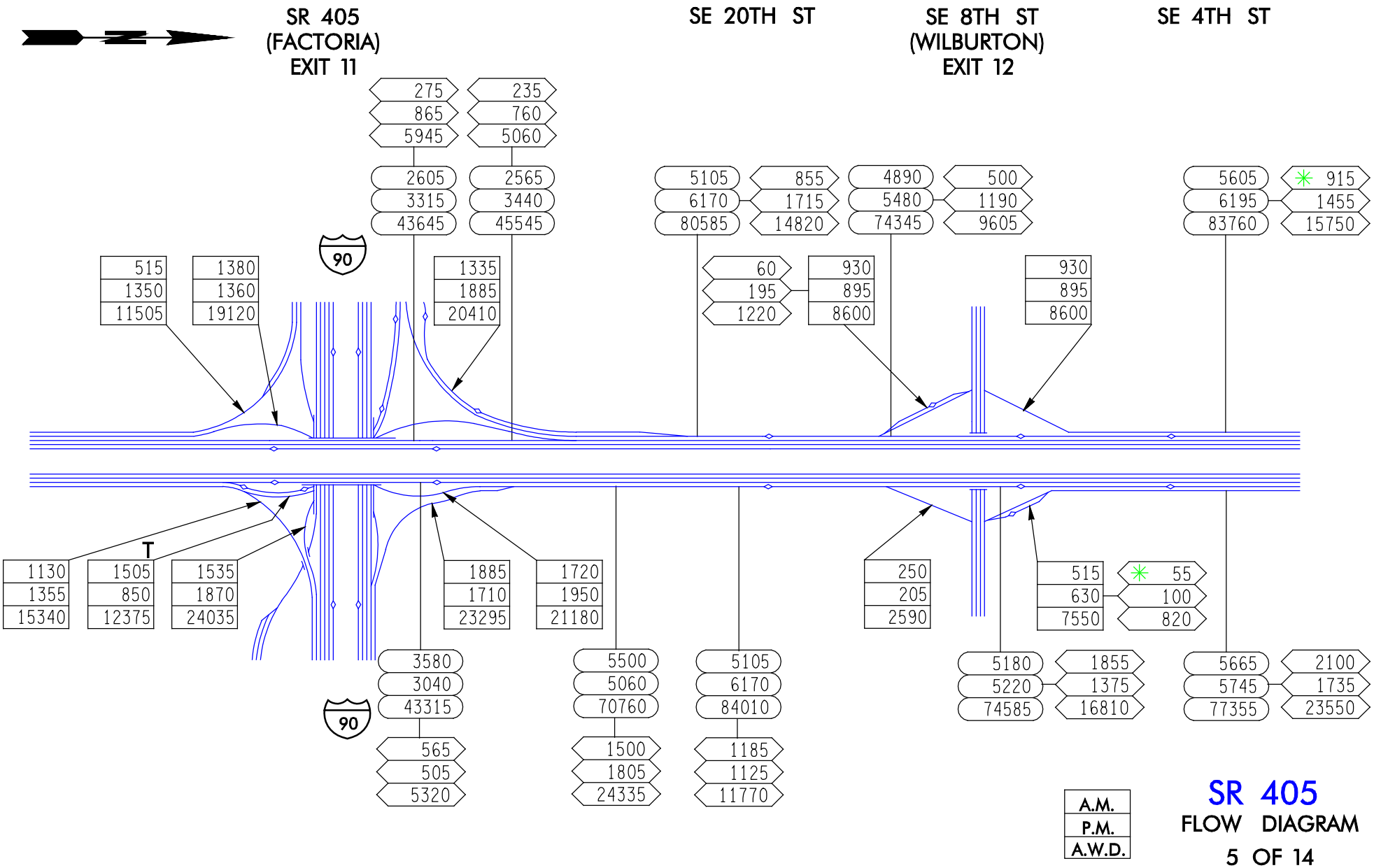

SR 405
FLOW DIAGRAM

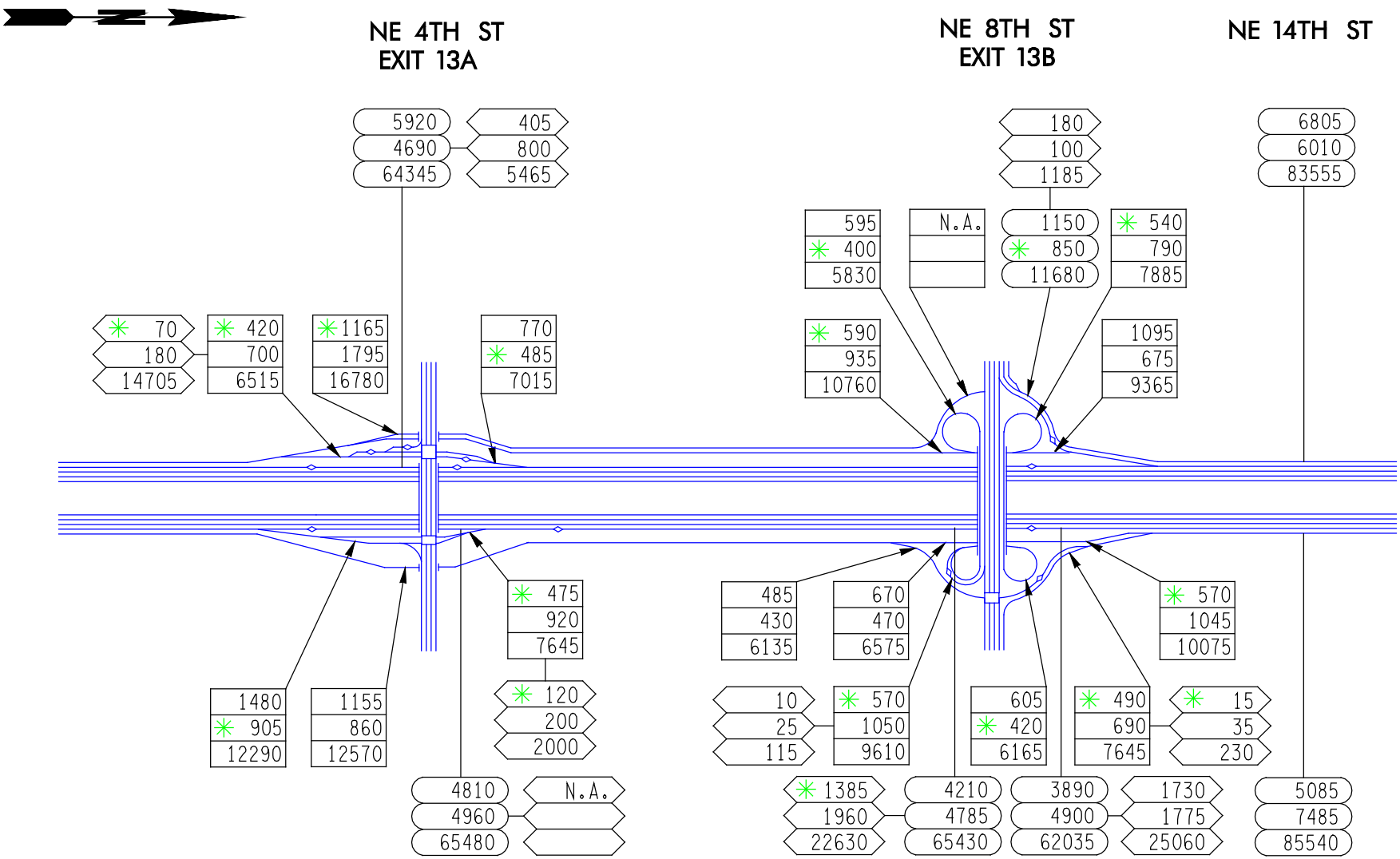

A.M.
P.M.
A.W.D.

SR 405

FLOW DIAGRAM

6 OF 14

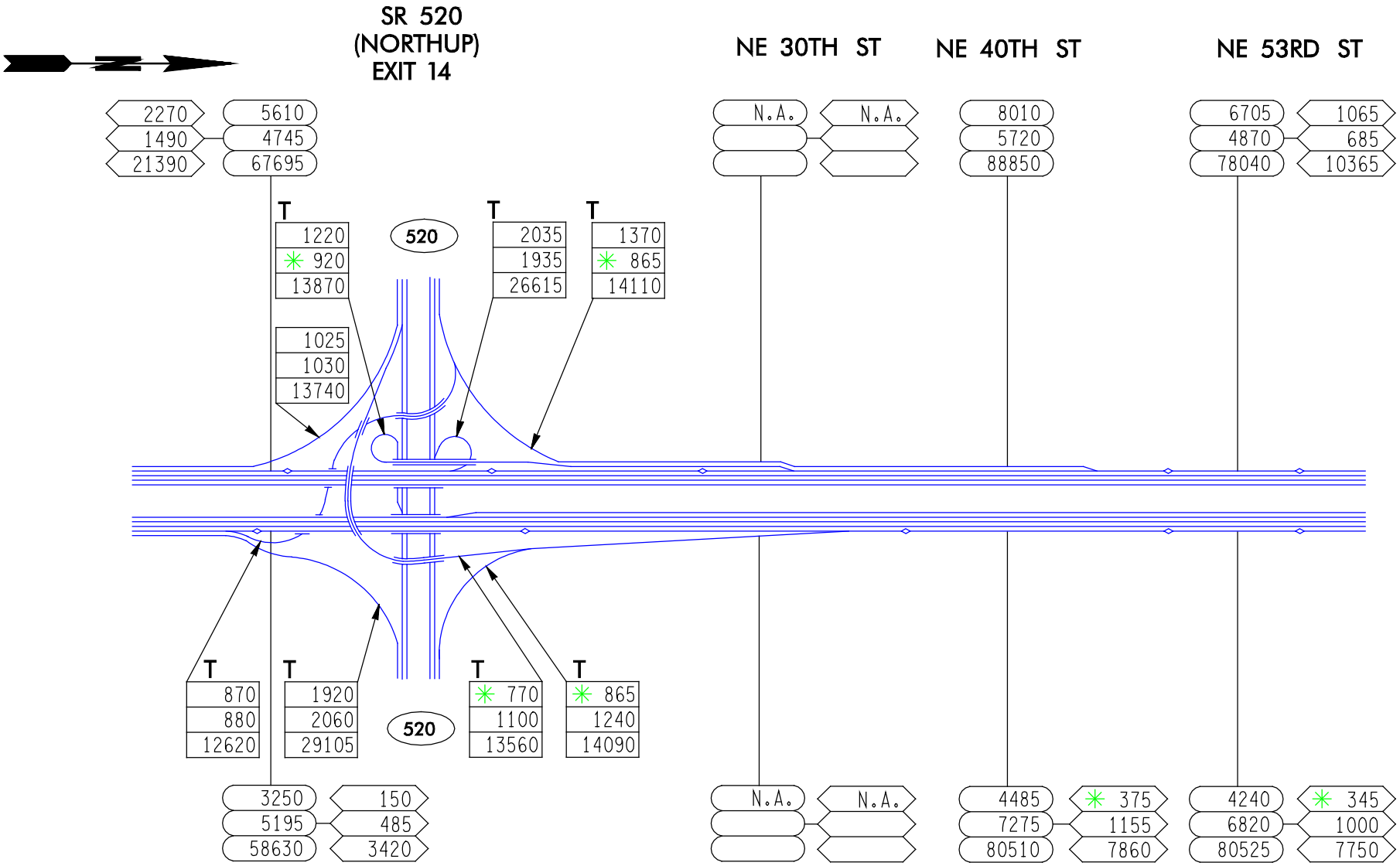

A.M.
P.M.
A.W.D.

SR 405

FLOW DIAGRAM

7 OF 14

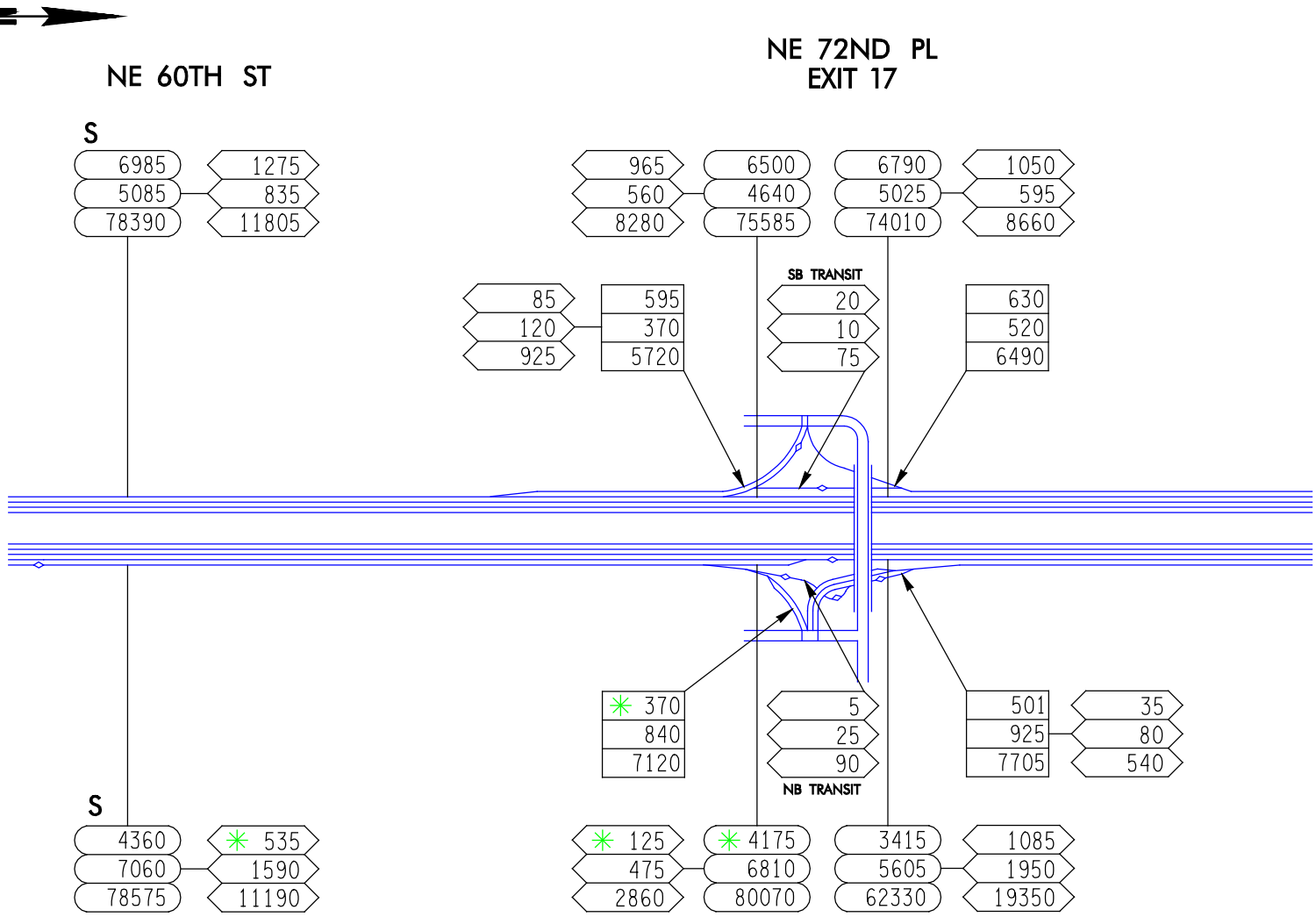

A.M.
P.M.
A.W.D.

SR 405

FLOW DIAGRAM

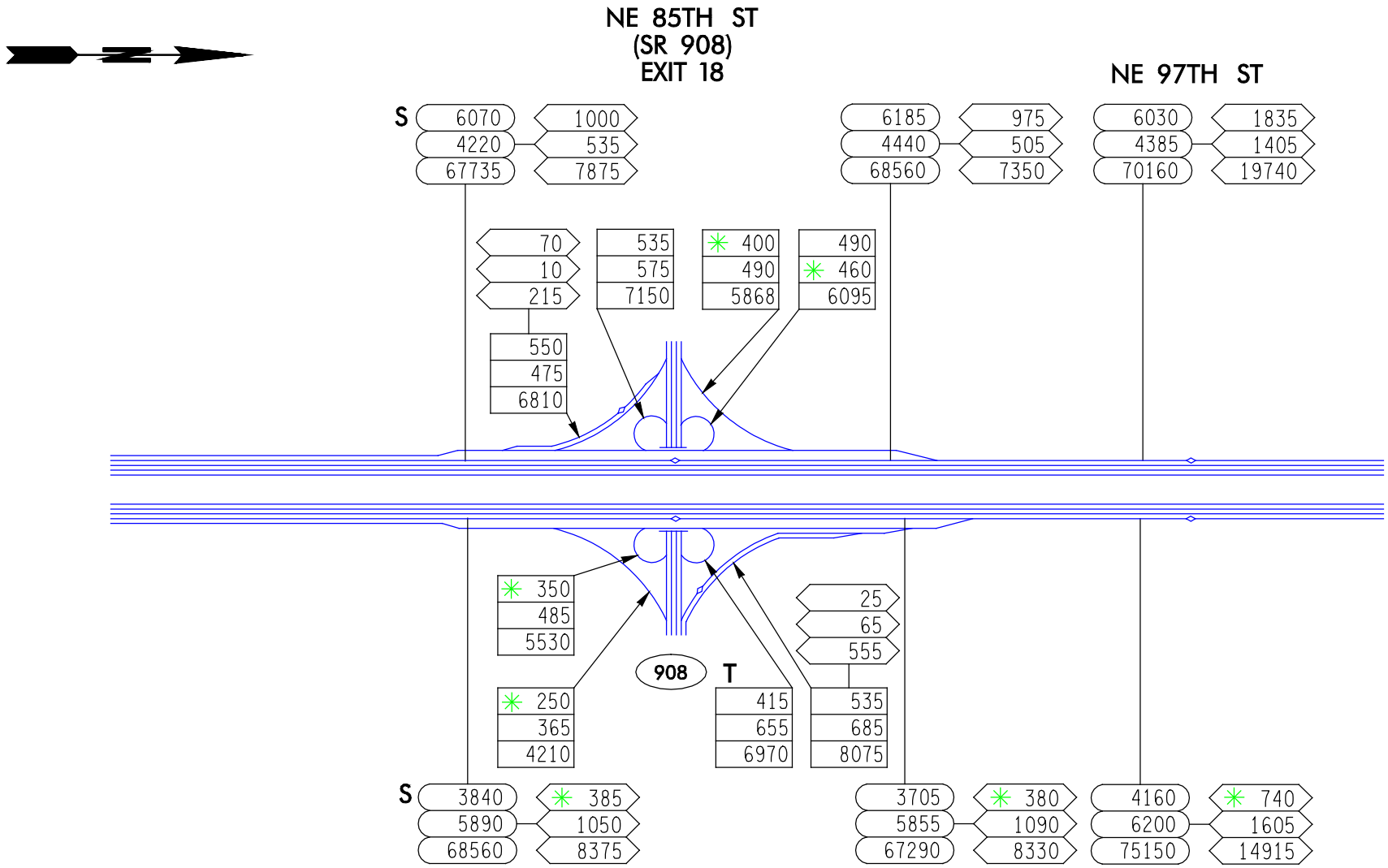

A.M.
P.M.
A.W.D.

SR 405

FLOW DIAGRAM

9 OF 14

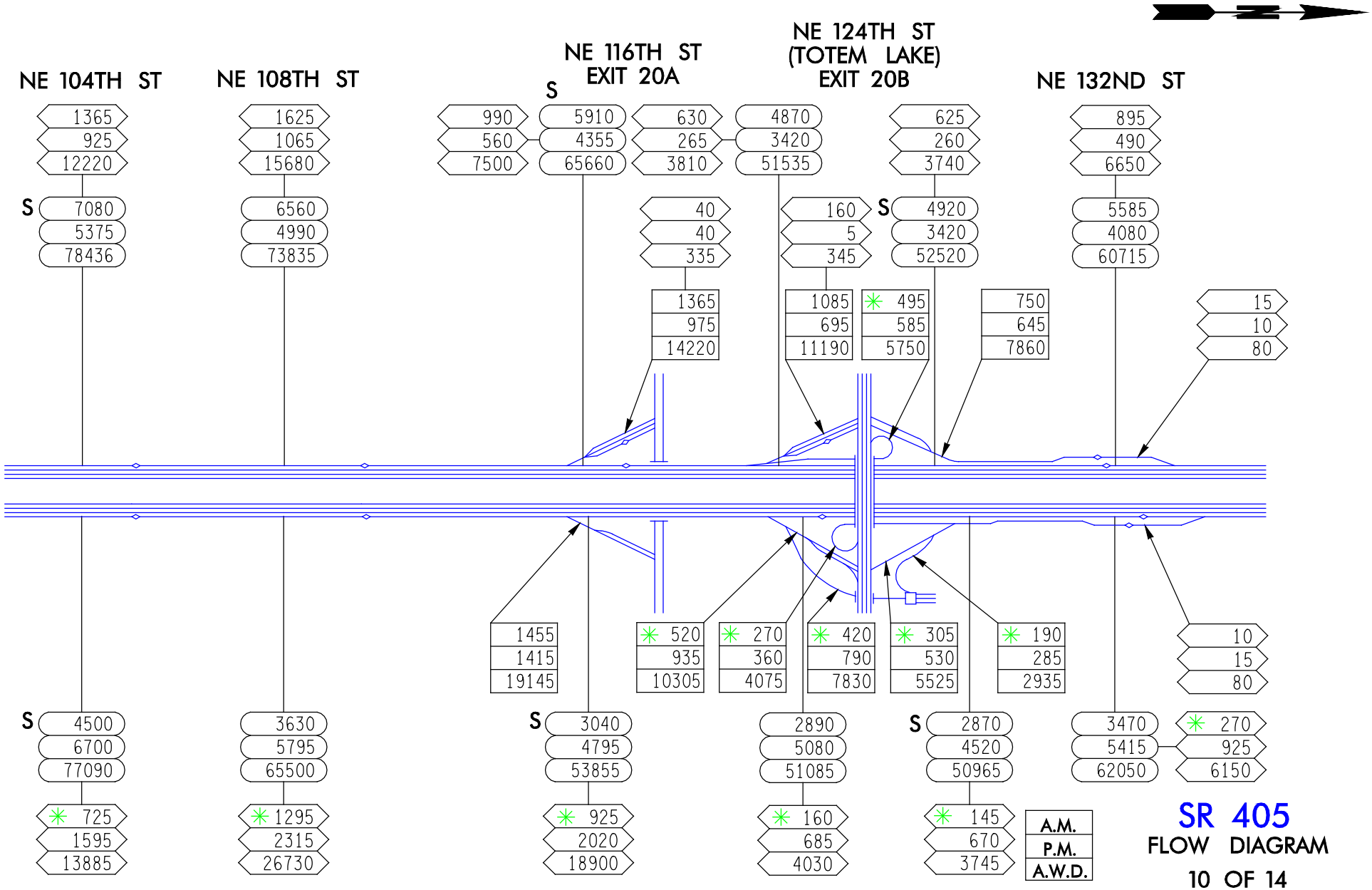

SR 405
FLOW DIAGRAM

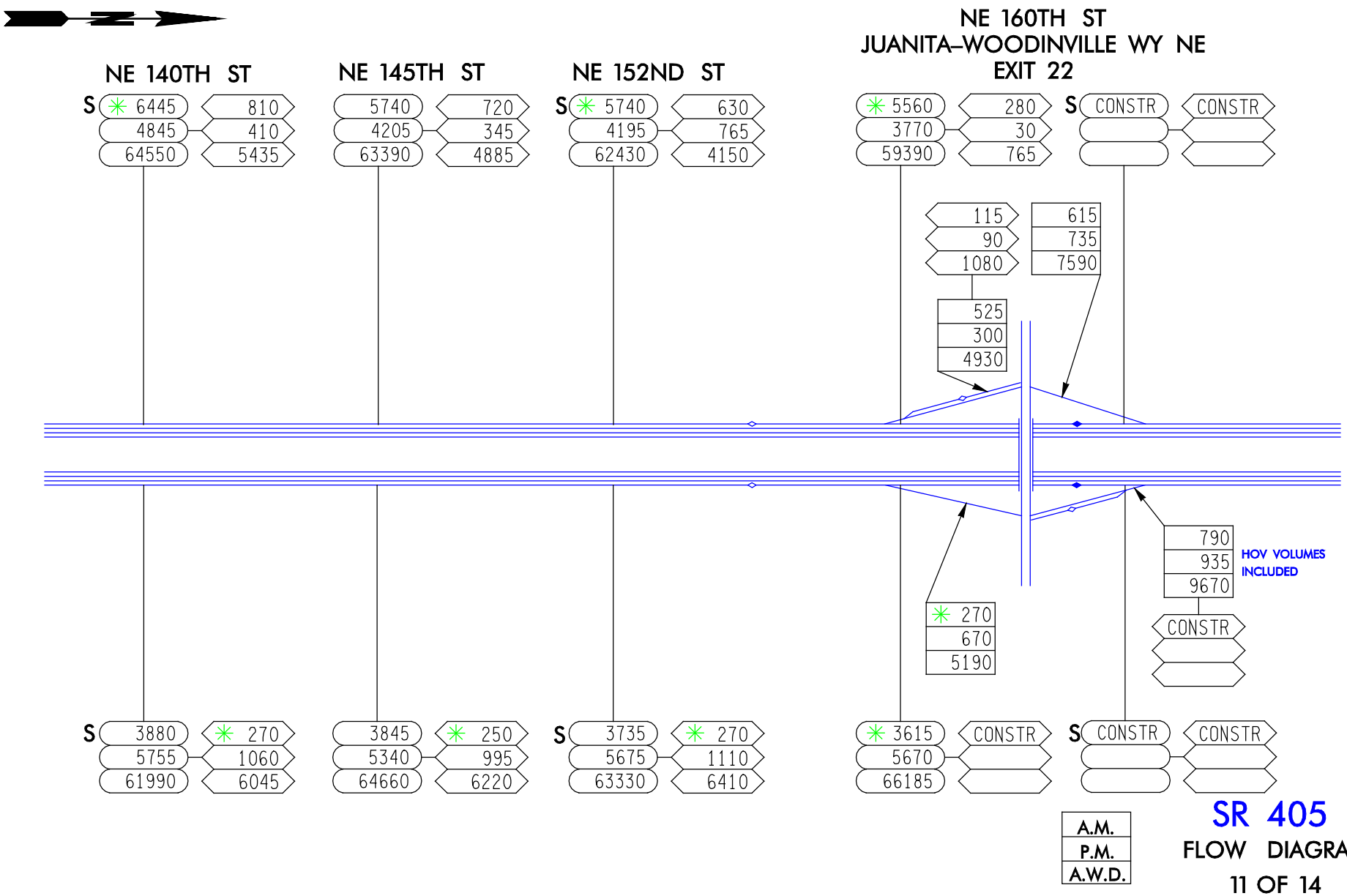

SR 405

FLOW DIAGRAM

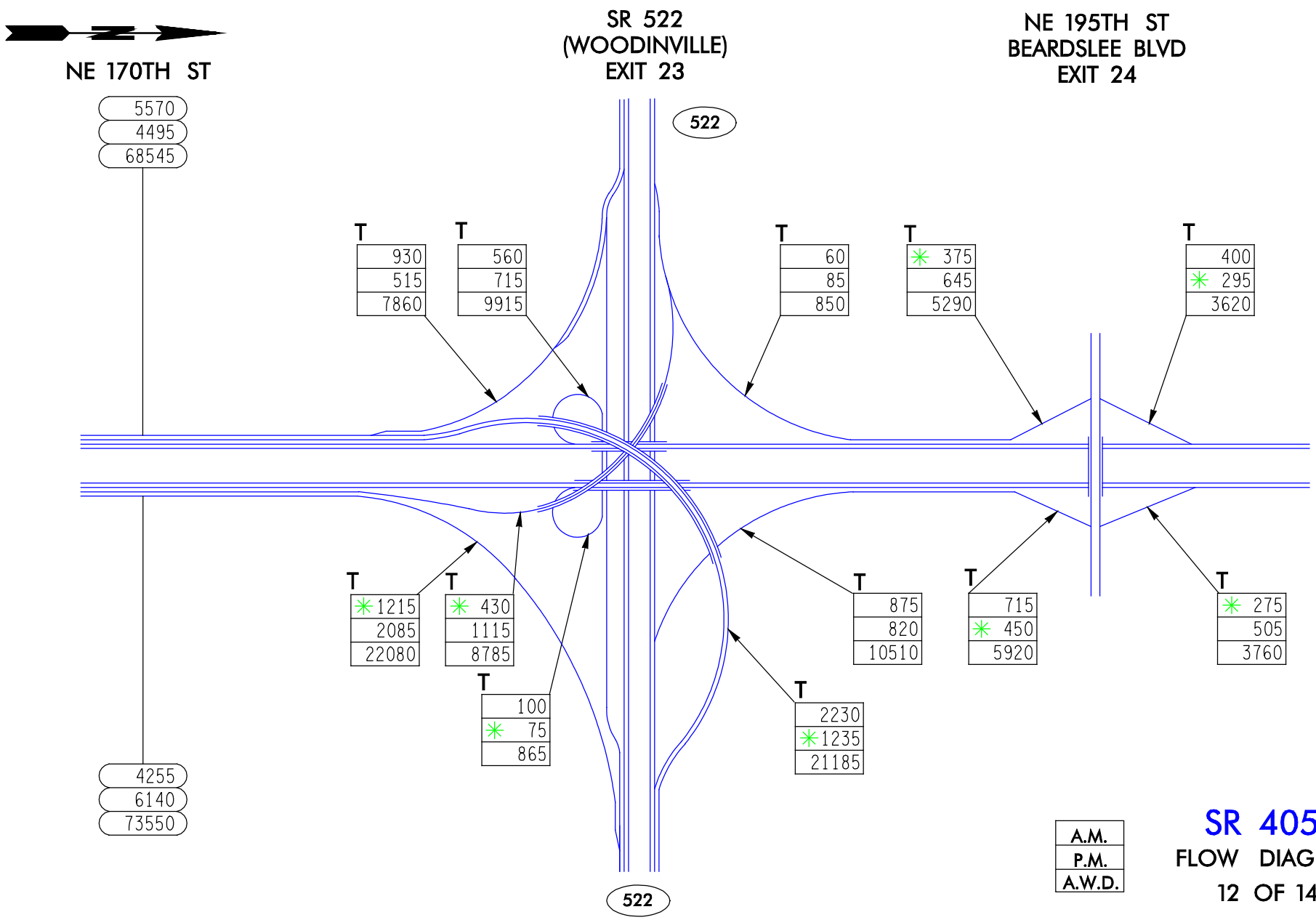

SR 405

FLOW DIAGRAM

12 OF 14

SR 527
19TH AVE SE
EXIT 26

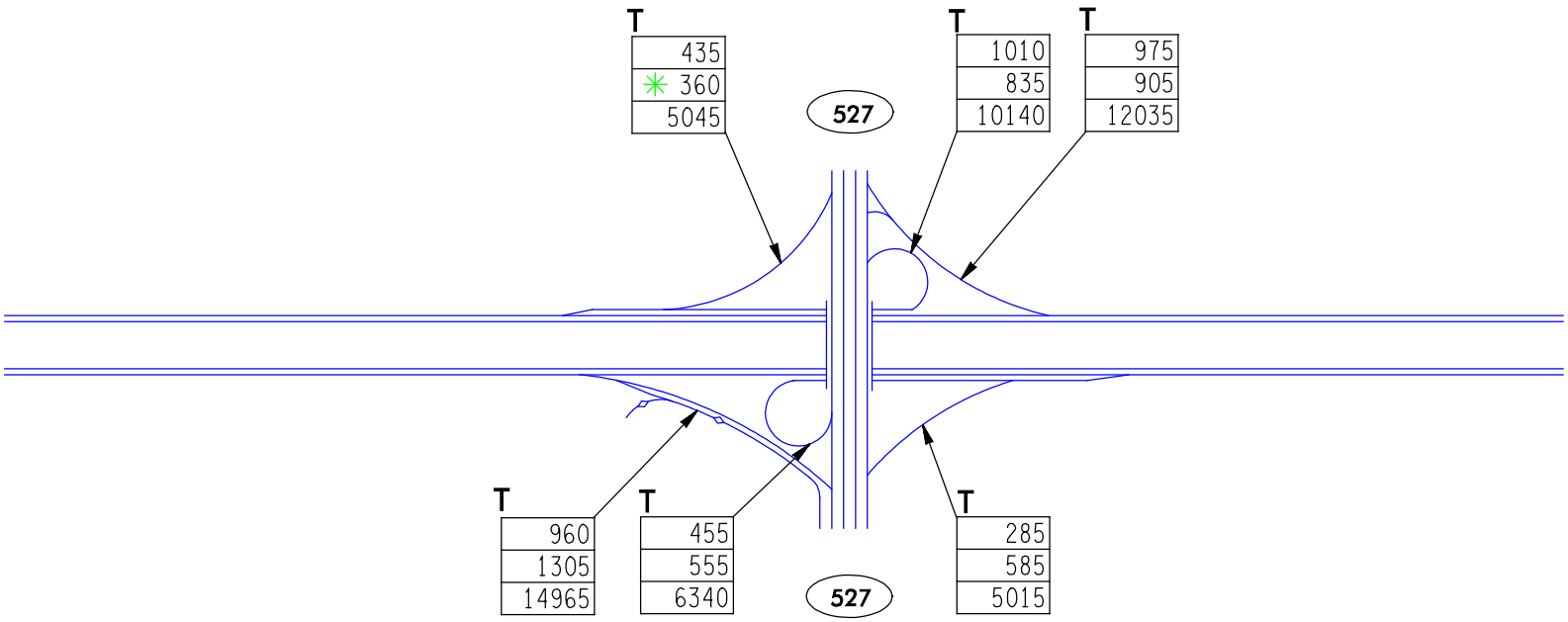

A.M.
P.M.
A.W.D.

SR 405
FLOW DIAGRAM
13 OF 14

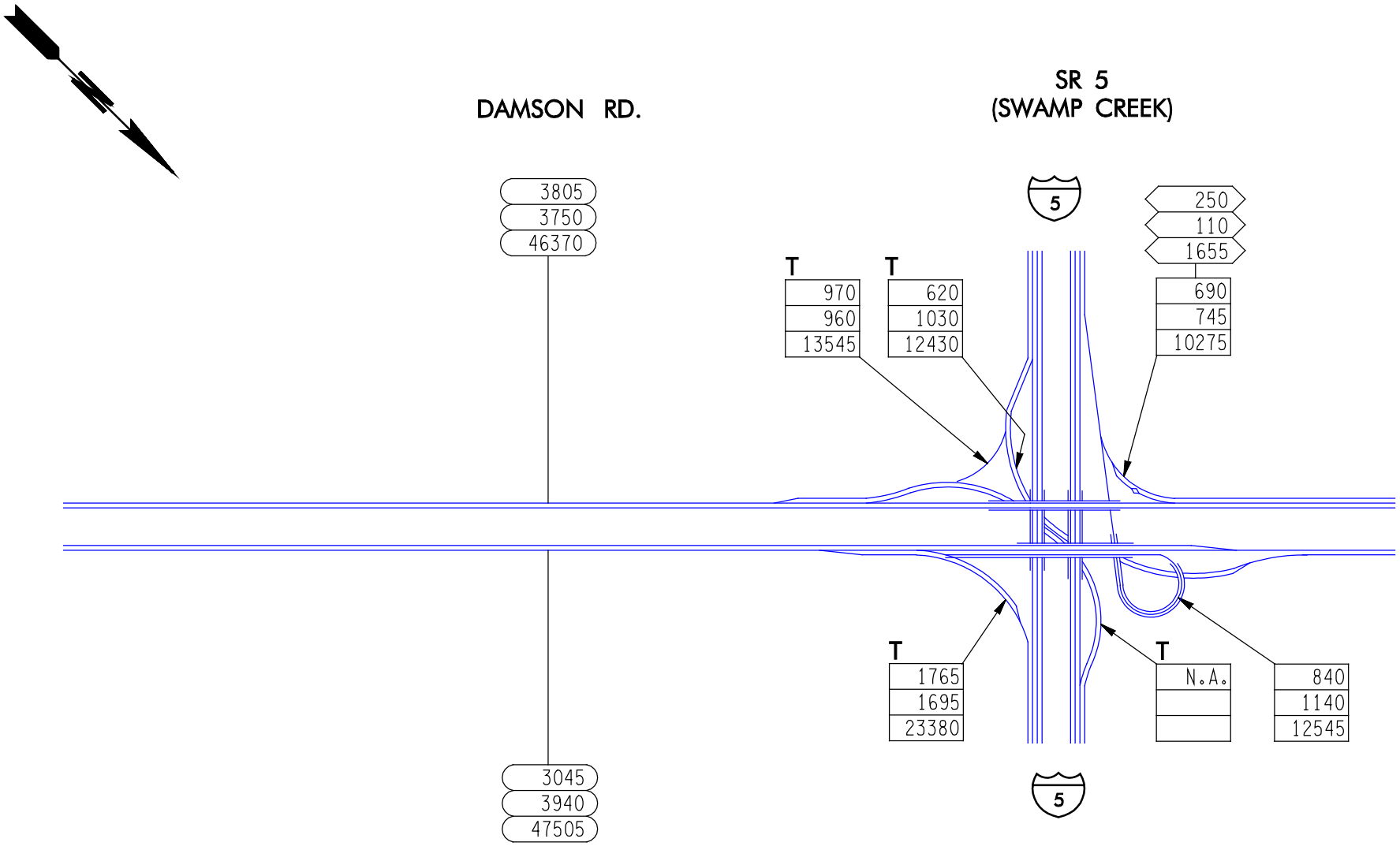

A.M.
P.M.
A.W.D.

SR 405

FLOW DIAGRAM

14 OF 14

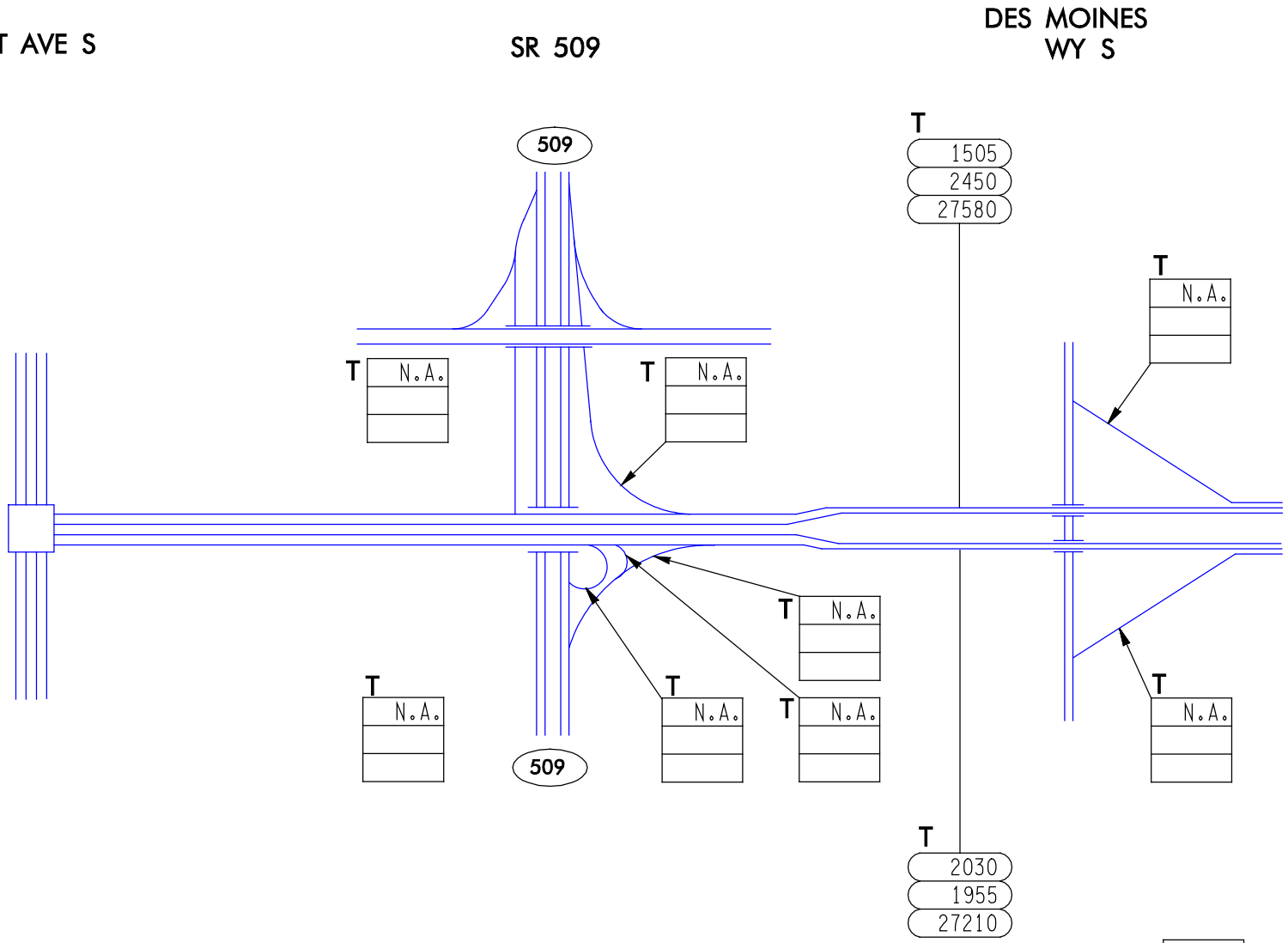

A.M.
P.M.
A.W.D.

SR 518

FLOW DIAGRAM

1 OF 3

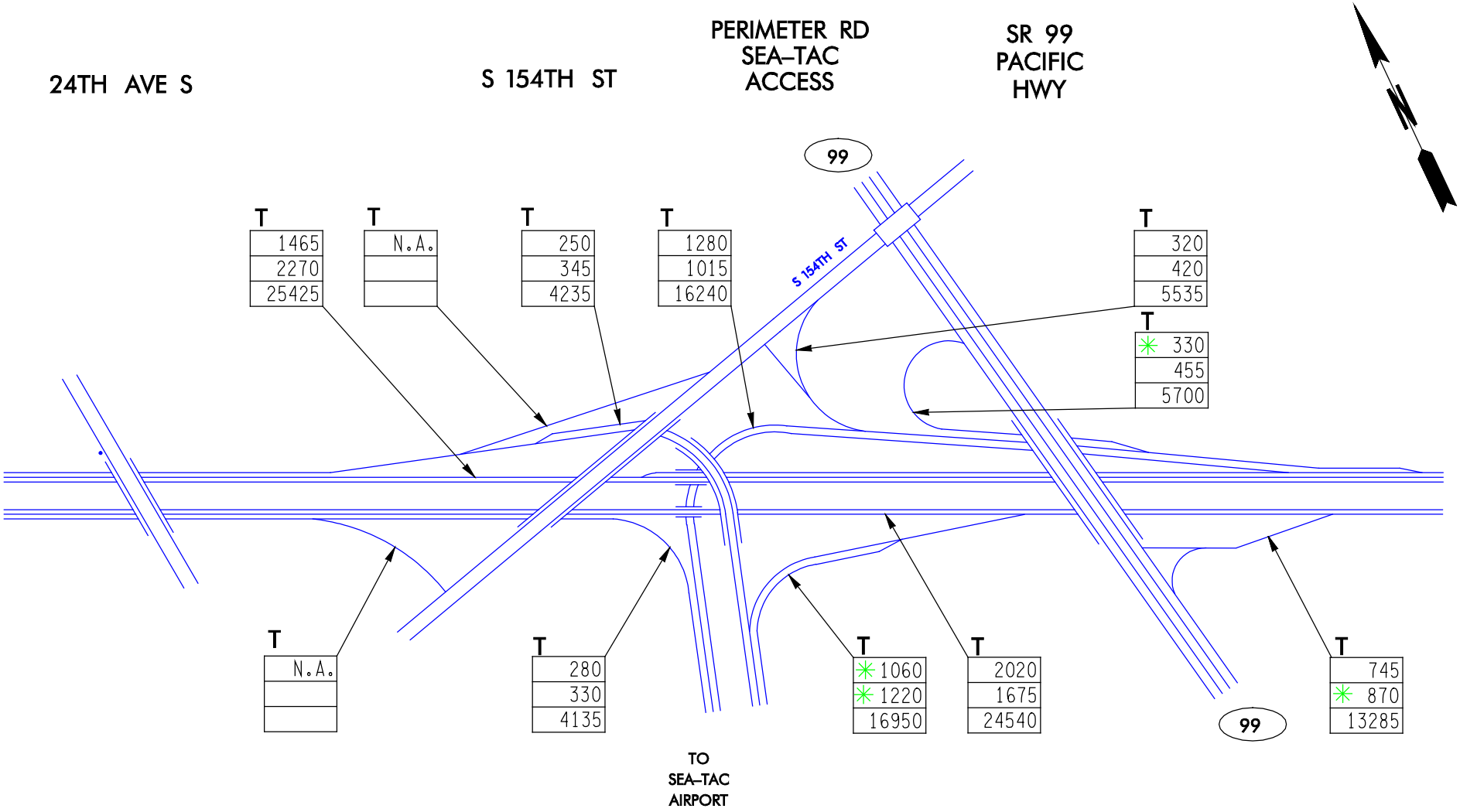

A.M.
P.M.
A.W.D.

SR 518
FLOW DIAGRAM
2 OF 3

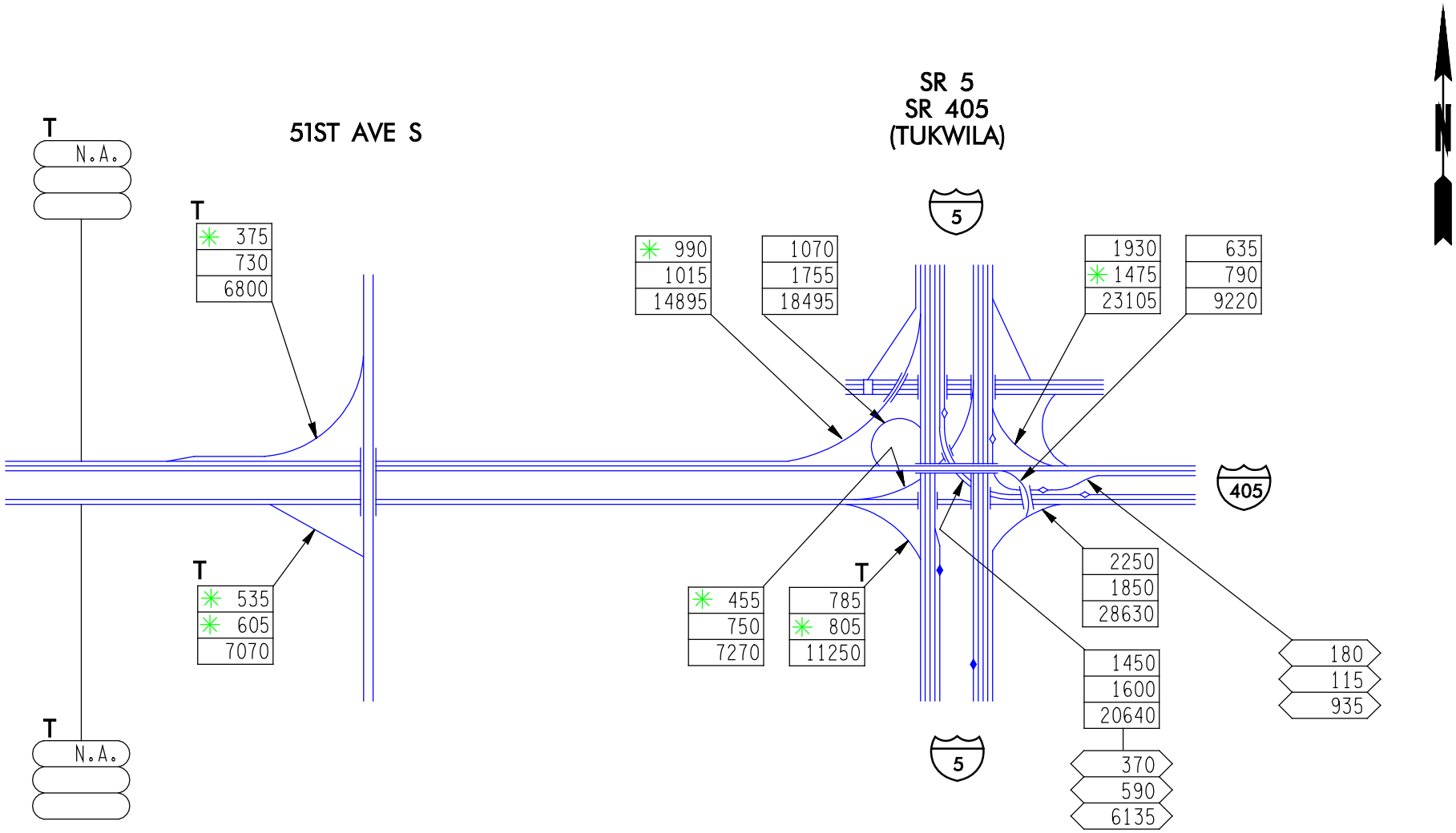

A.M.
P.M.
A.W.D.

SR 518

FLOW DIAGRAM

3 OF 3

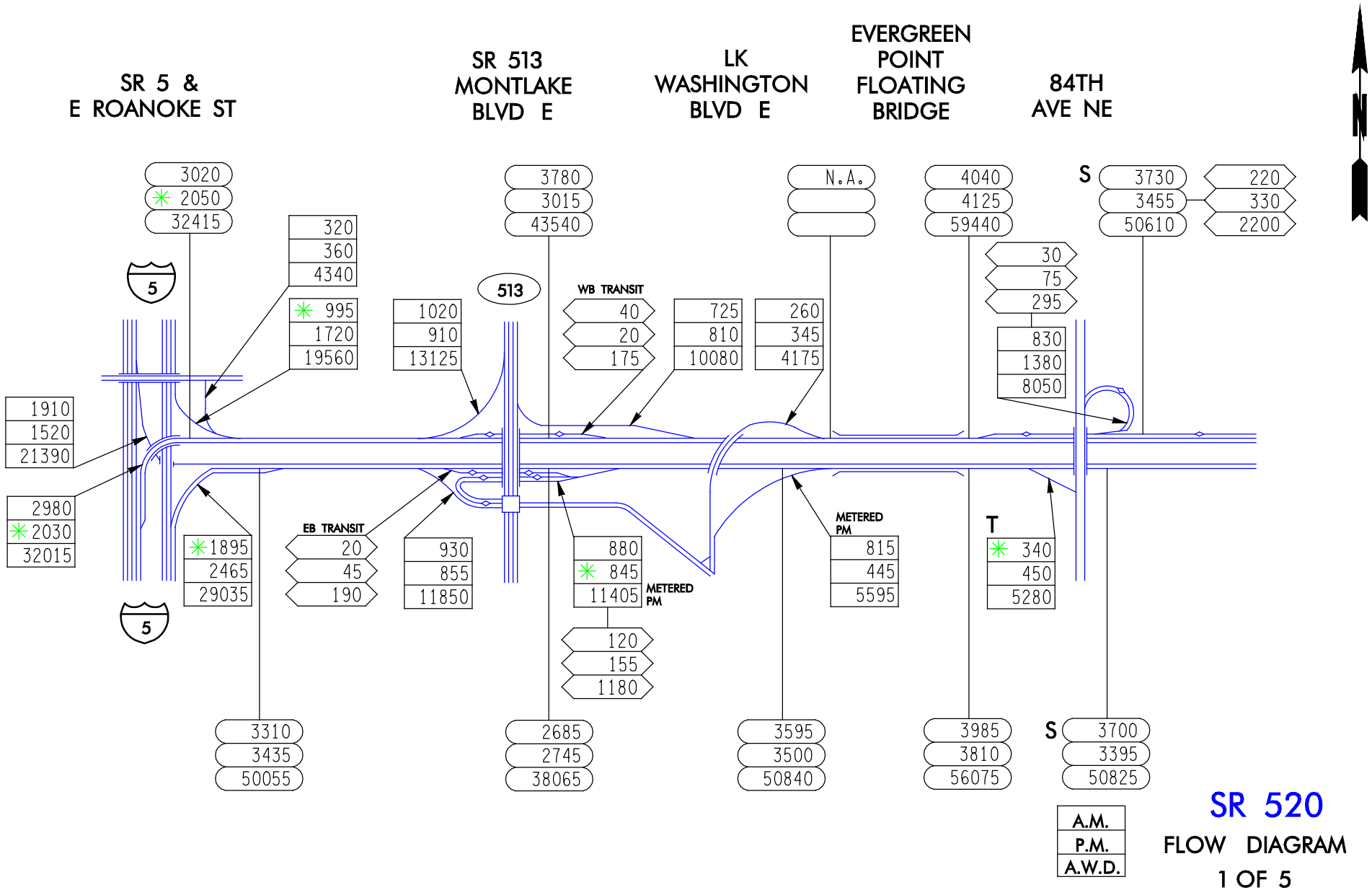

SR 520

FLOW DIAGRAM

1 OF 5

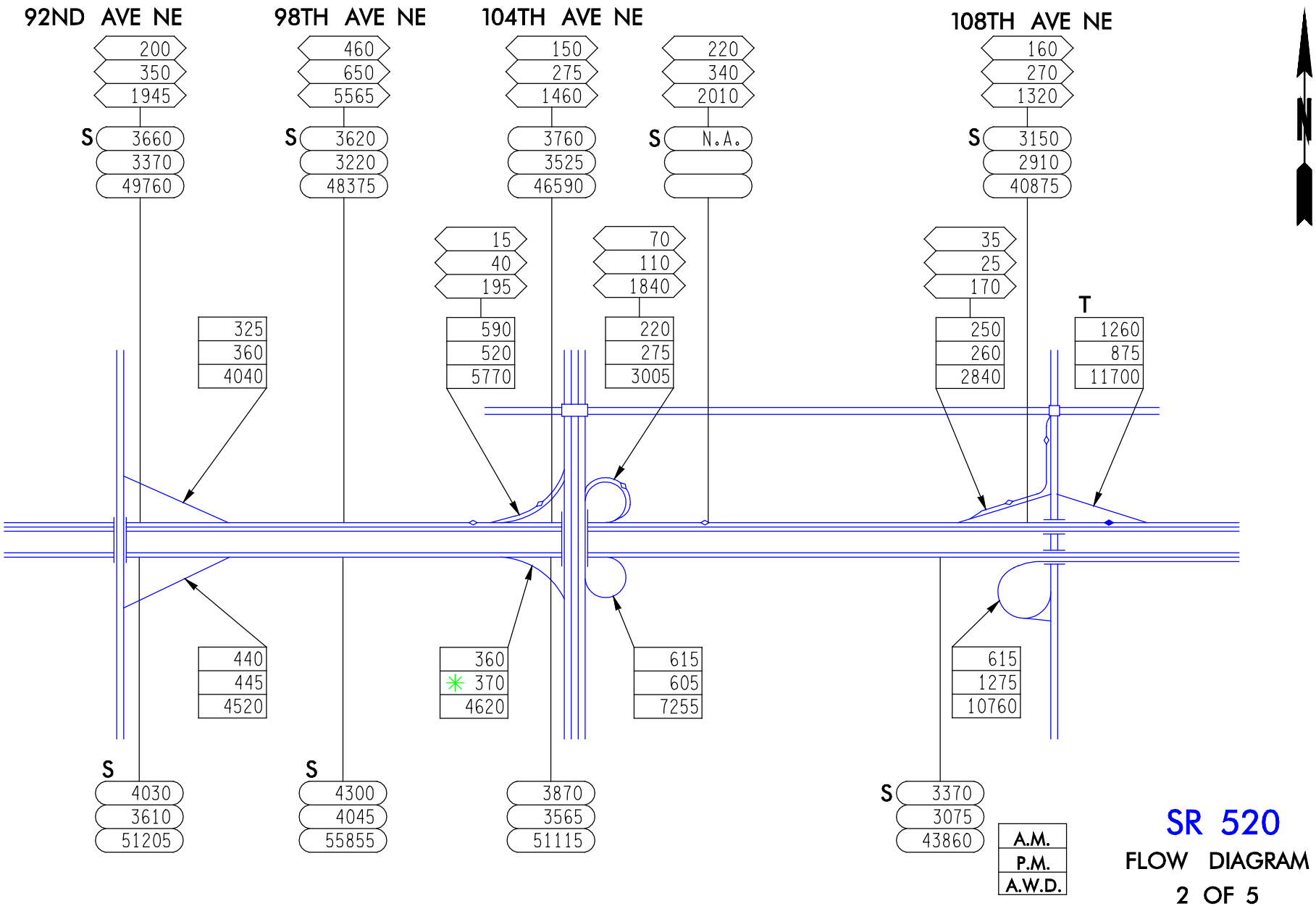

SR 520

FLOW DIAGRAM

2 OF 5

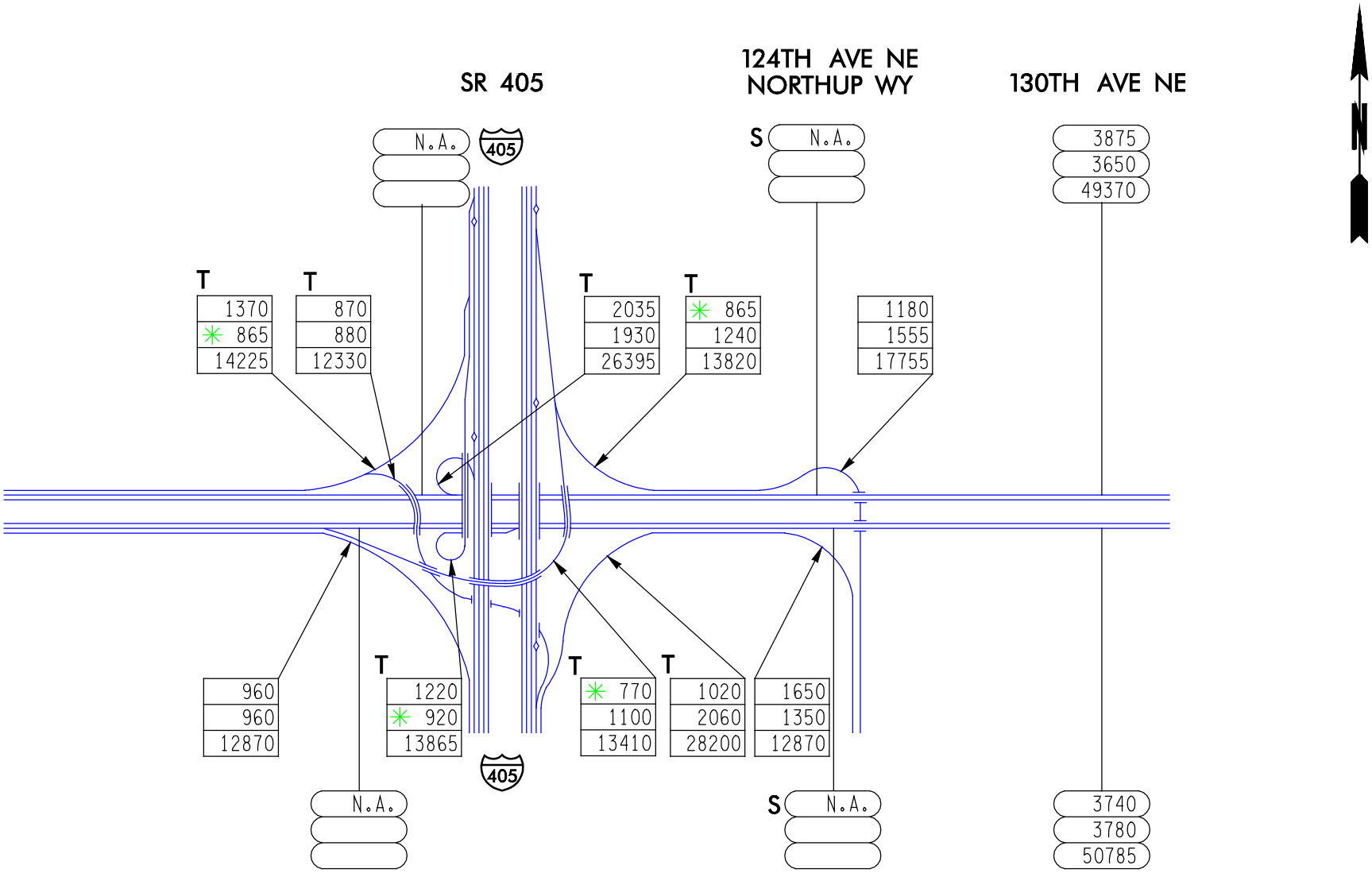

A.M.
P.M.
A.W.D.

SR 520

FLOW DIAGRAM

3 OF 5

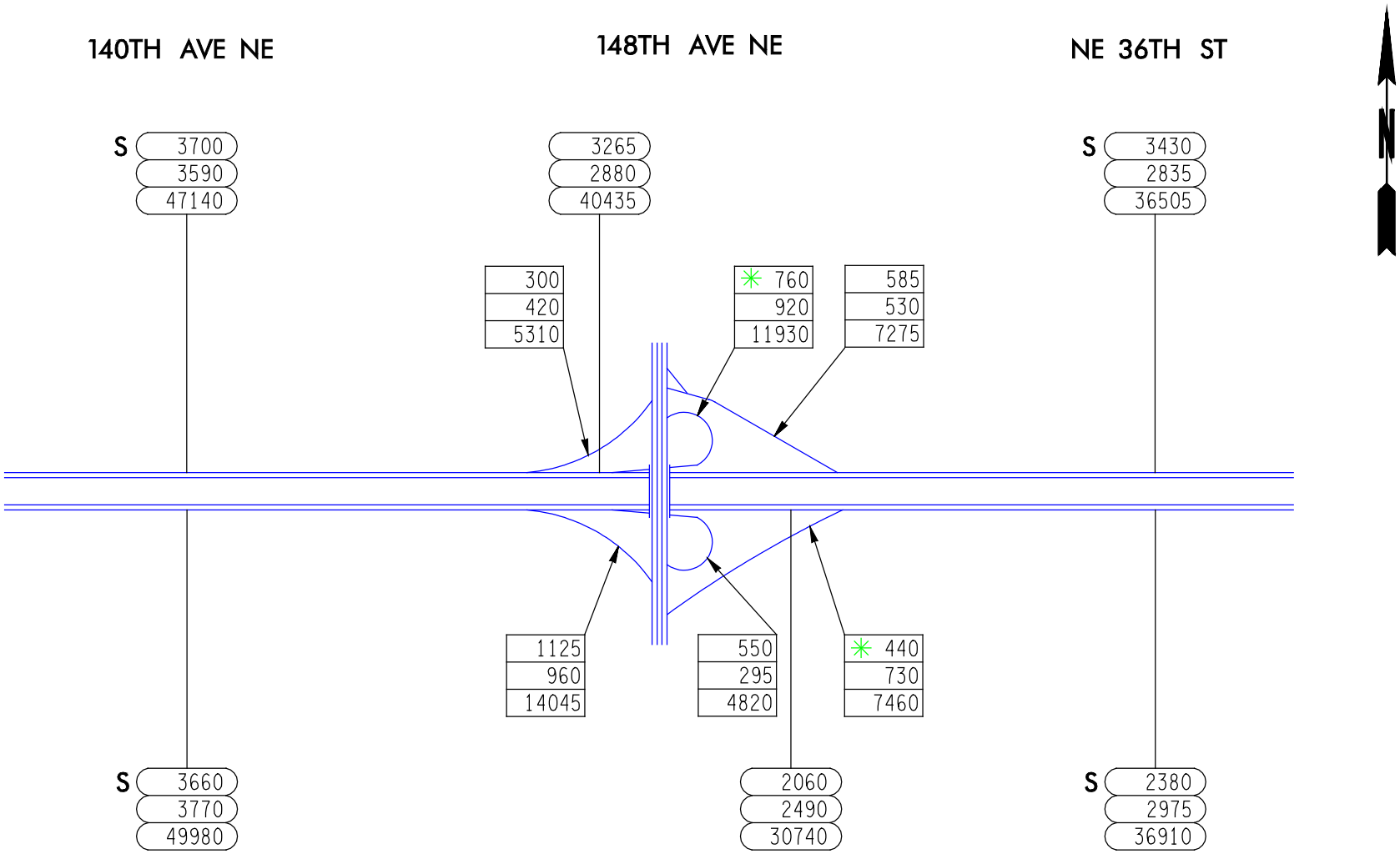

A.M.
P.M.
A.W.D.

SR 520

FLOW DIAGRAM

4 OF 5

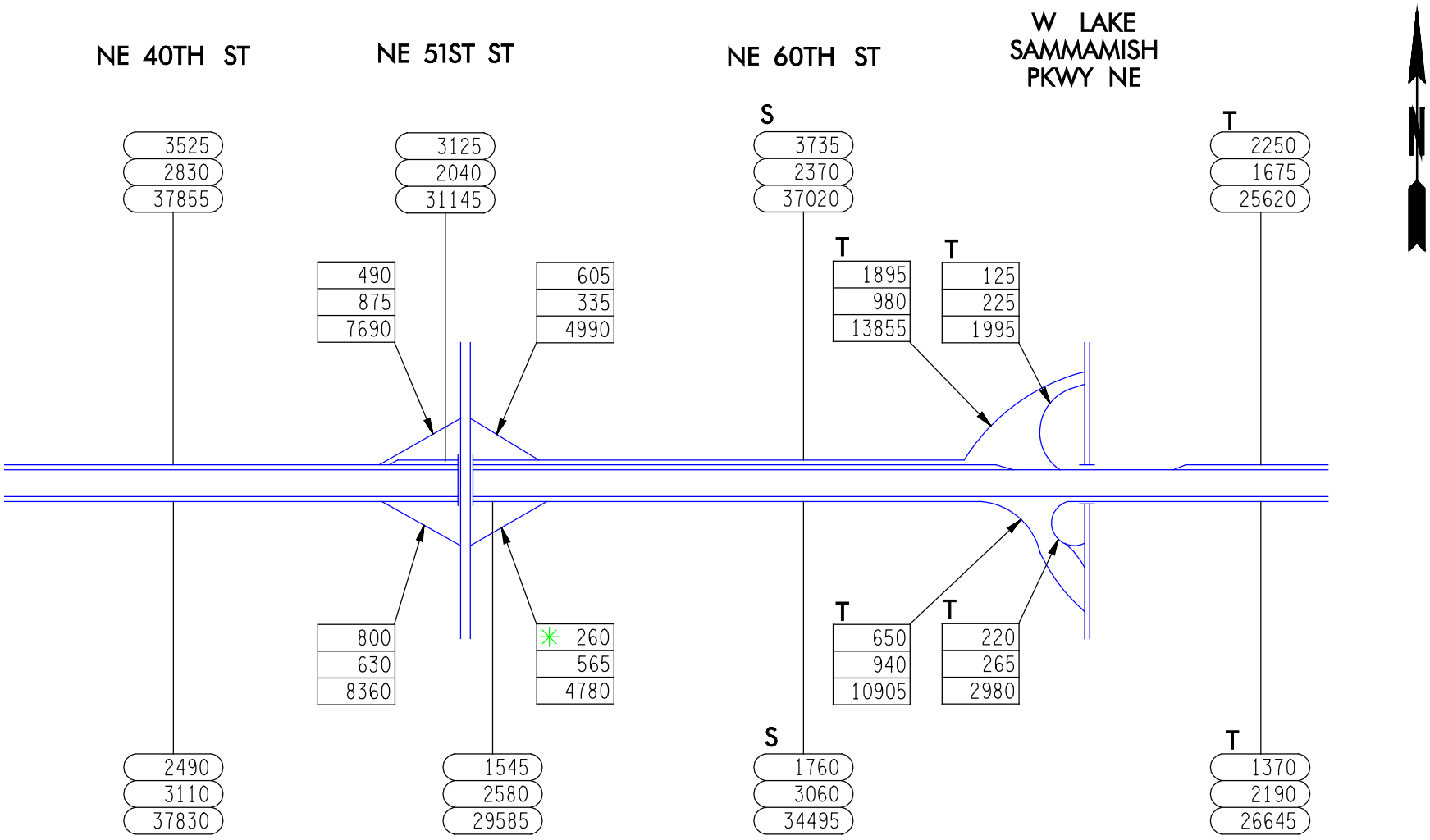

A.M.
P.M.
A.W.D.

SR 520

FLOW DIAGRAM

5 OF 5