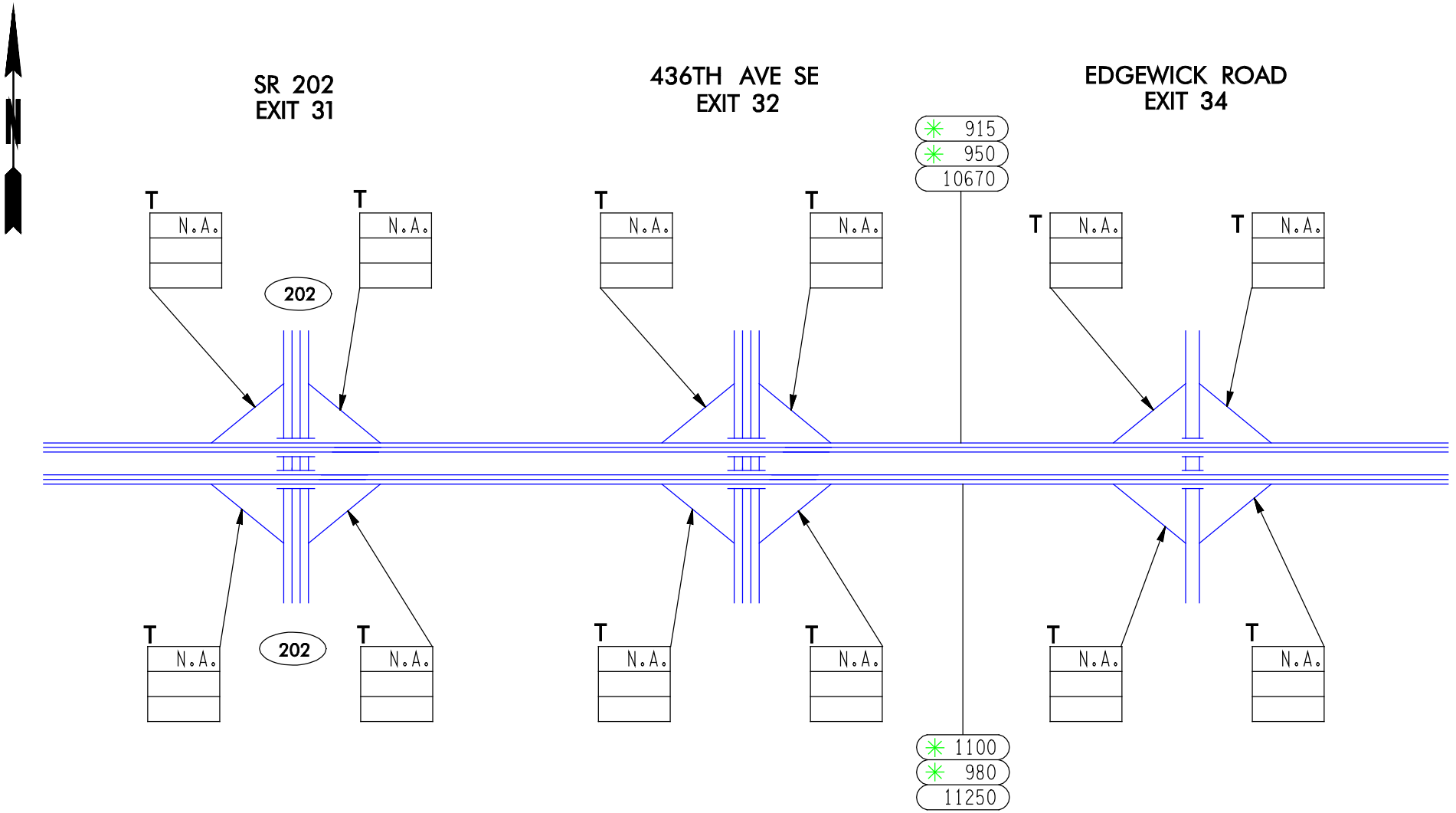

A.M.
P.M.
A.W.D.

SR 90

FLOW DIAGRAM

10 OF 10