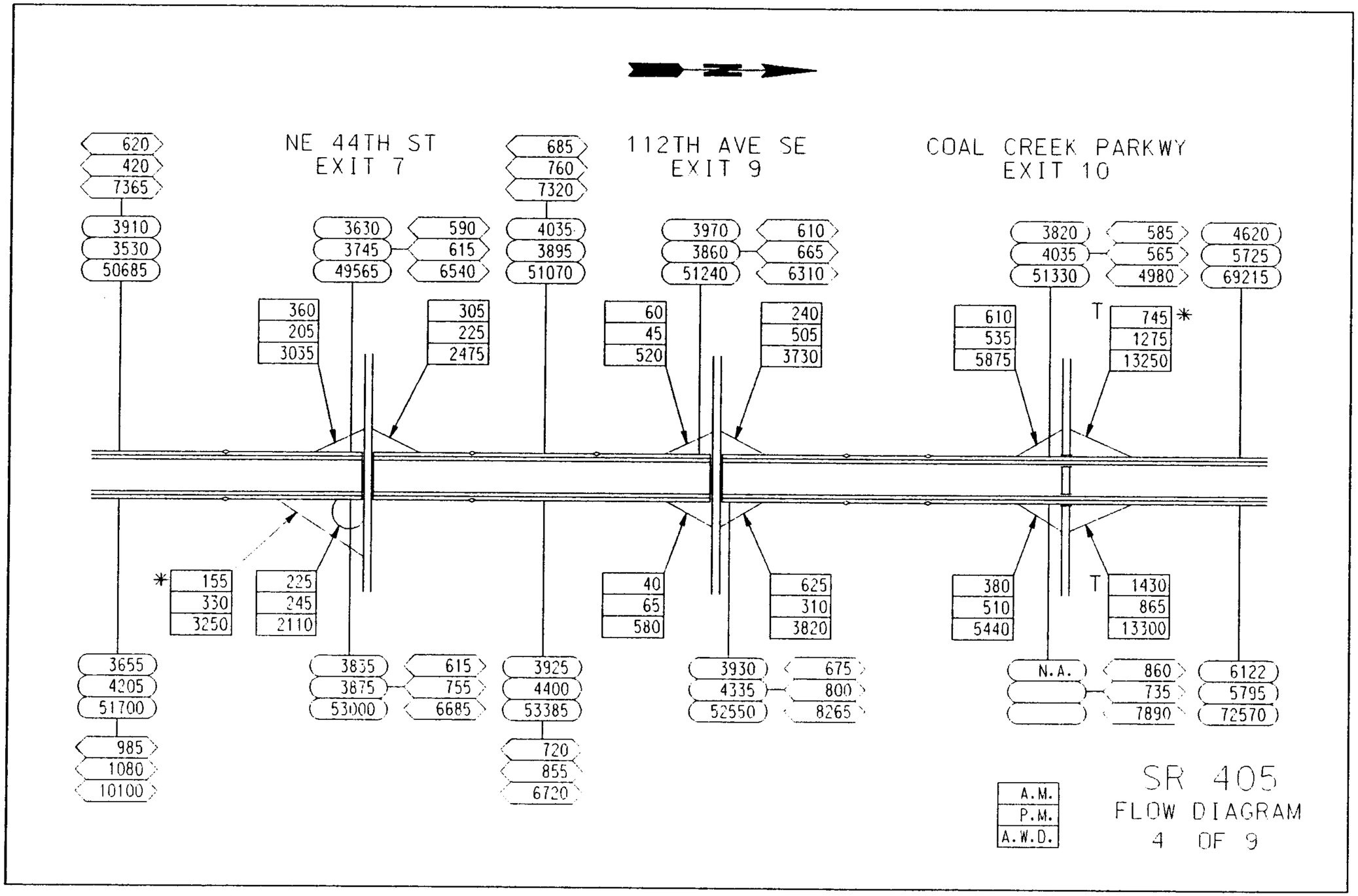

c.\ramp\sr405s4.dgn Aug. 27, 1992 12:46.04