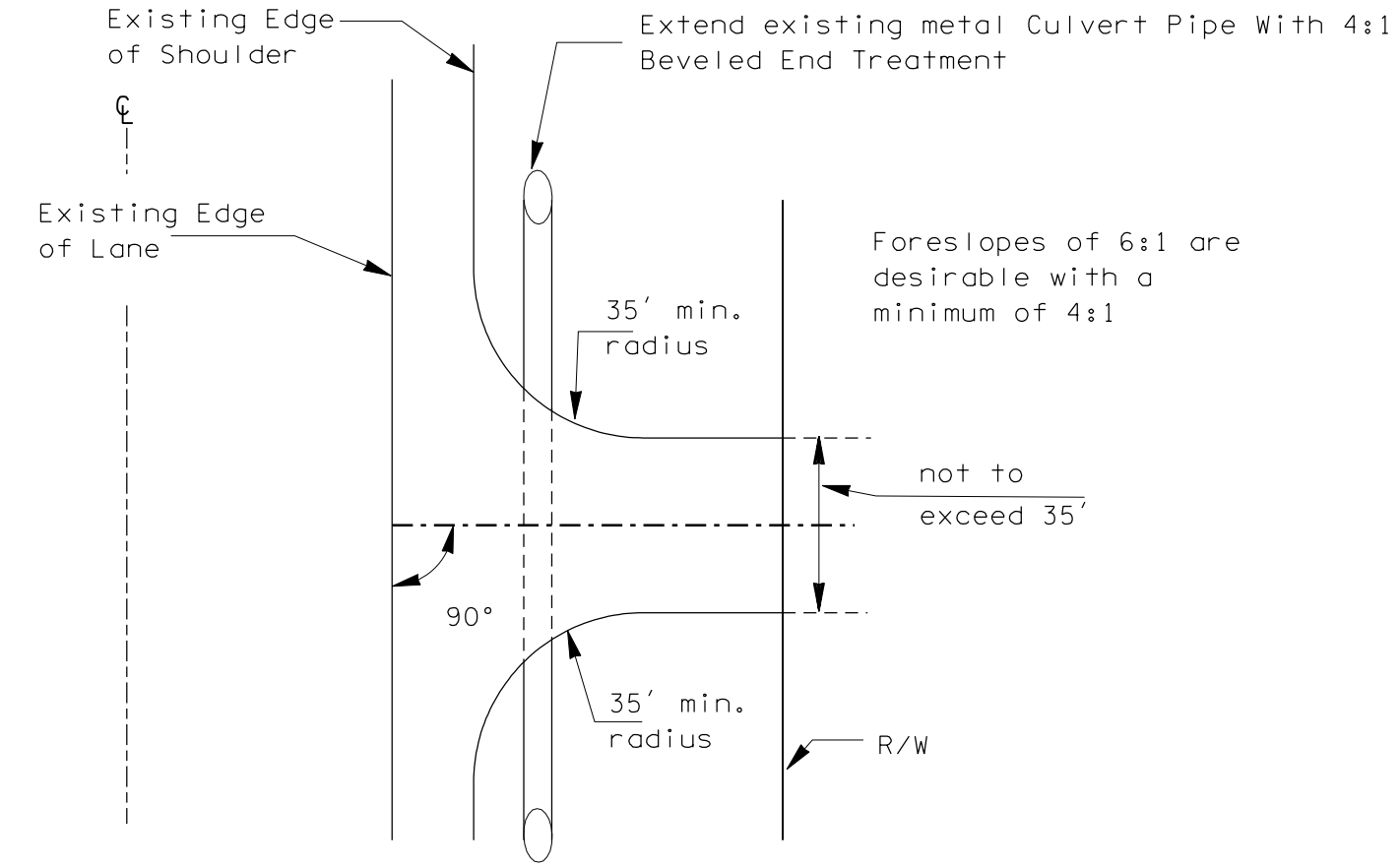

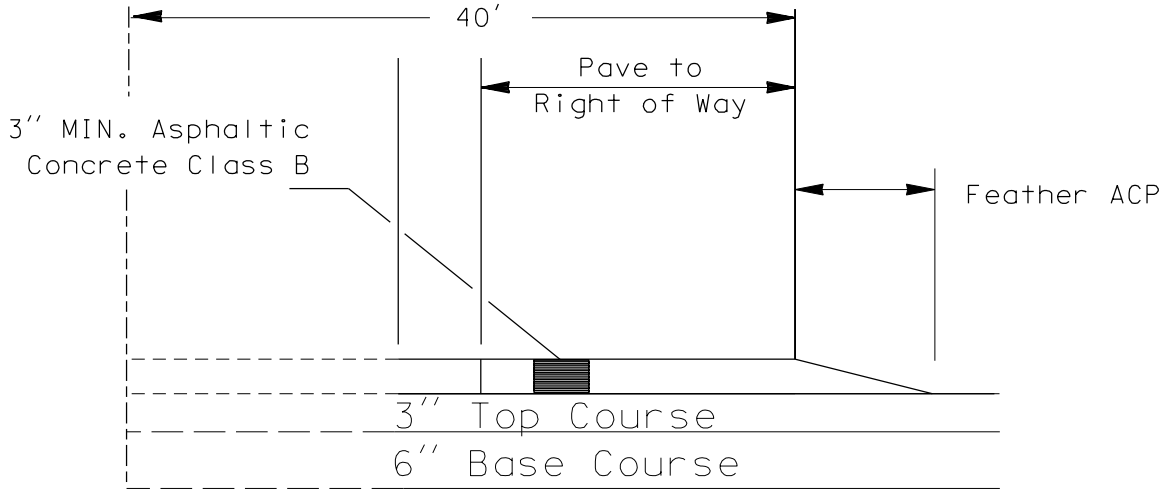

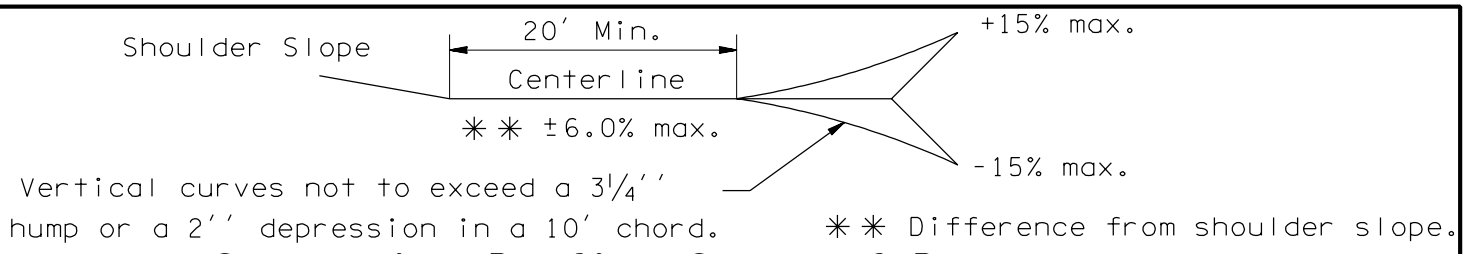

Centerline Profile Grade of Road Approach

Commercial Approach
Type D Template - Category 2