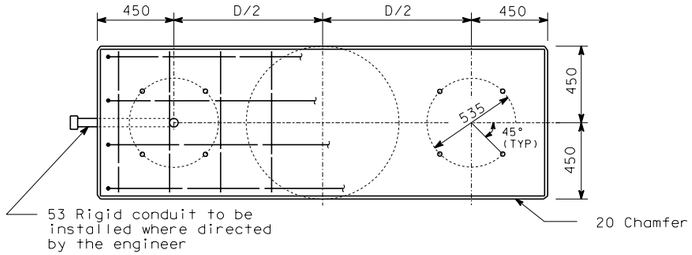

PLAN

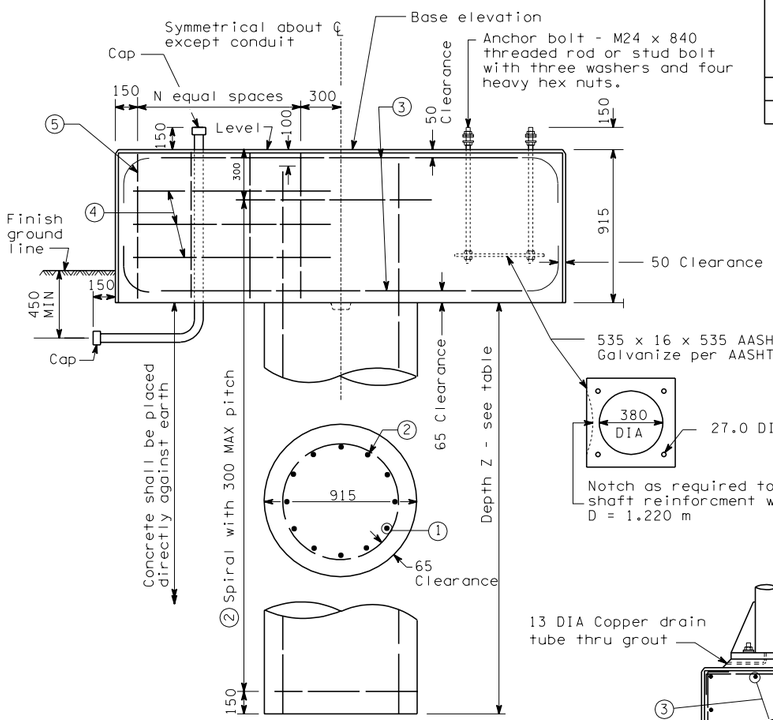

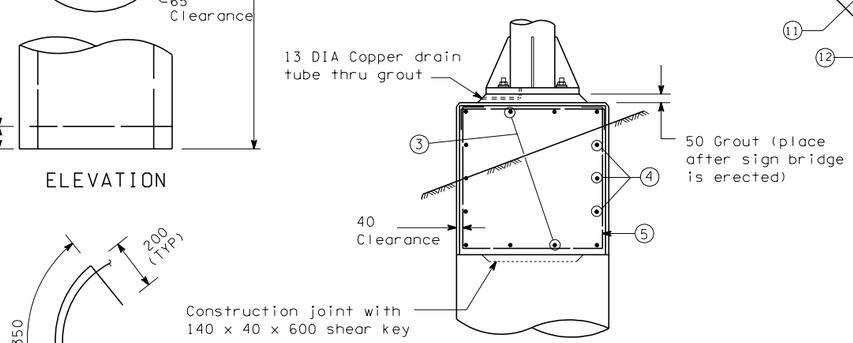

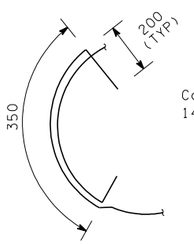

BAR ② #4 LAP SPLICE DETAIL

FOUNDATION - TYPE 1

BAR LIST

Number of bars listed is for one foundation only. Dimensions are out to out.

Foundation Type	Mark	Location	Span Length: 18.3 or less No	18.3 or less Size	18.4 to 27.4 No	18.4 to 27.4 Size	27.5 to 36.6 No	27.5 to 36.6 Size	36.7 to 45.7 No	36.7 to 45.7 Size	Bending Diagram
1	1	Shaft - vertical	11	9	14	11	18	11	23	11	Str
	2	Shaft - spiral	*	4	*	4	*	4	*	4	
	3	Cap-Top and bottom	8	6	8	7	10	8	12	8	
	4	Cap - sides	6	4	6	4	6	4	6	4	Str
	5	Cap - hoops	6	4	8	4	14	4	22	4	
2 and 3	6	Cap - top	4	6	4	7	5	8	6	8	
	7	Cap - sides	14	4	16	4	18	4	18	4	Str
	8	Cap - hoops	6	4	8	4	14	4	22	4	
	9	Cap - bottom	8	6	8	7	10	8	12	8	
	10	Fnd wall vertical	30	6	42	6	42	7	50	7	Str
	11	Fnd wall ties	8	5	8	5	8	5	8	5	
	12	Fnd wall horizontal	4	5	4	5	4	5	4	5	Str
2	13	Fnd wall horizontal	8	5	8	5	10	5	12	5	
3	13	Fnd wall horizontal	10	5	12	5	14	5	16	5	

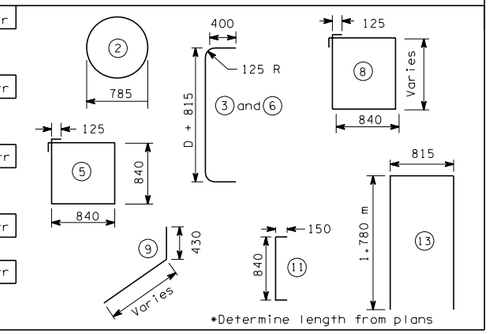

NOTES

1. See contract plans for type of foundation to be used.
2. Use Class 28 Concrete through-out.

Foundation Type	Span Length (m): Length (m)	18.3 or less	18.4 to 27.4	27.5 to 36.6	36.7 to 45.7
All	D (m)	1.220	1.525	1.830	2.130
	N	2	3	6	10
1	Z (m)	3.5	4.1	4.6	5.0
2	Z (m)	1.7	2.0	2.3	2.6
3	Z (m)	2.1	2.6	3.1	3.5

Note:
Conduit and anchor bolts same as Type 1

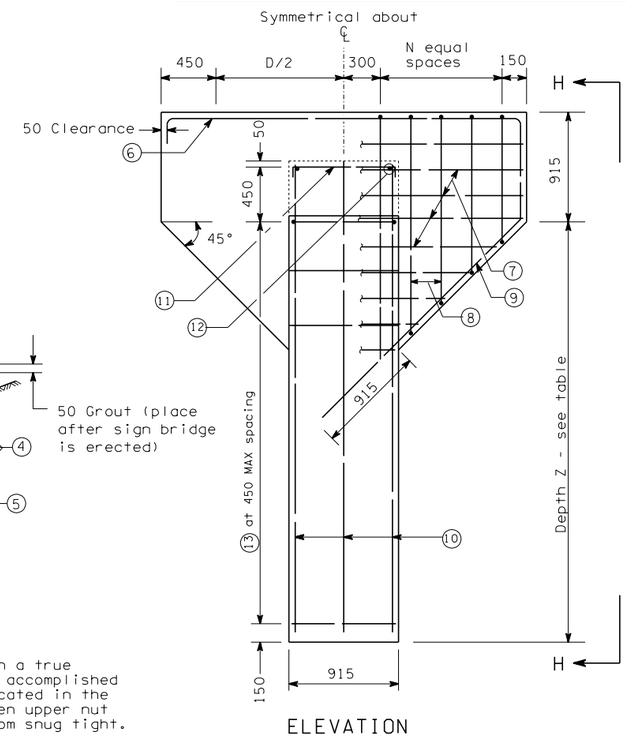

ELEVATION

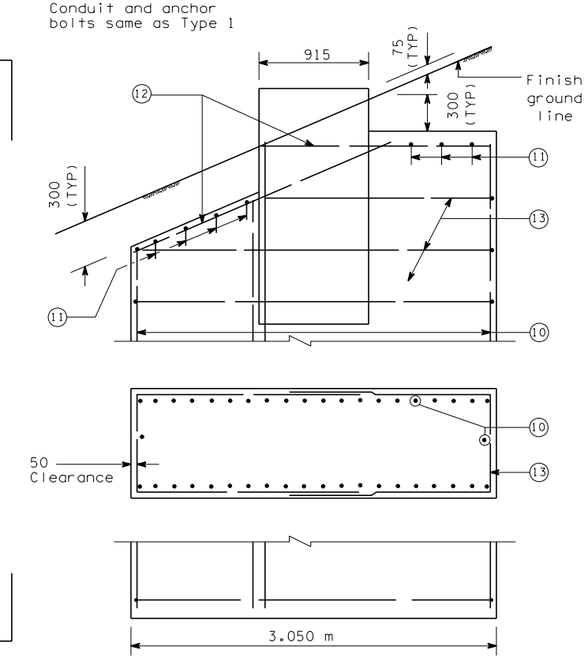

VIEW H-H

FOUNDATION - TYPES 2 AND 3

ALL DIMENSIONS ARE IN MILLIMETERS UNLESS OTHERWISE NOTED

EXPIRES JANUARY 17, 1999

SIGN BRIDGE FOUNDATIONS

STANDARD PLAN G-2a

NOTE: THIS PLAN IS NOT A LEGAL ENGINEERING DOCUMENT BUT AN ELECTRONIC DUPLICATE. THE ORIGINAL, SIGNED BY THE ENGINEER AND APPROVED FOR PUBLICATION, IS KEPT ON FILE AT THE WASHINGTON STATE DEPARTMENT OF TRANSPORTATION. A COPY MAY BE OBTAINED UPON REQUEST.

DATE	REVISION	BY
5/98	Redrawn on CADD, revised for steel materials only.	GEM

APPROVED FOR PUBLICATION

Clifford E. Mansfield — 7/2/98

for STATE DESIGN ENGINEER — DATE

WASHINGTON STATE DEPARTMENT OF TRANSPORTATION
OLYMPIA, WASHINGTON

SIGN BRIDGE FOUNDATIONS