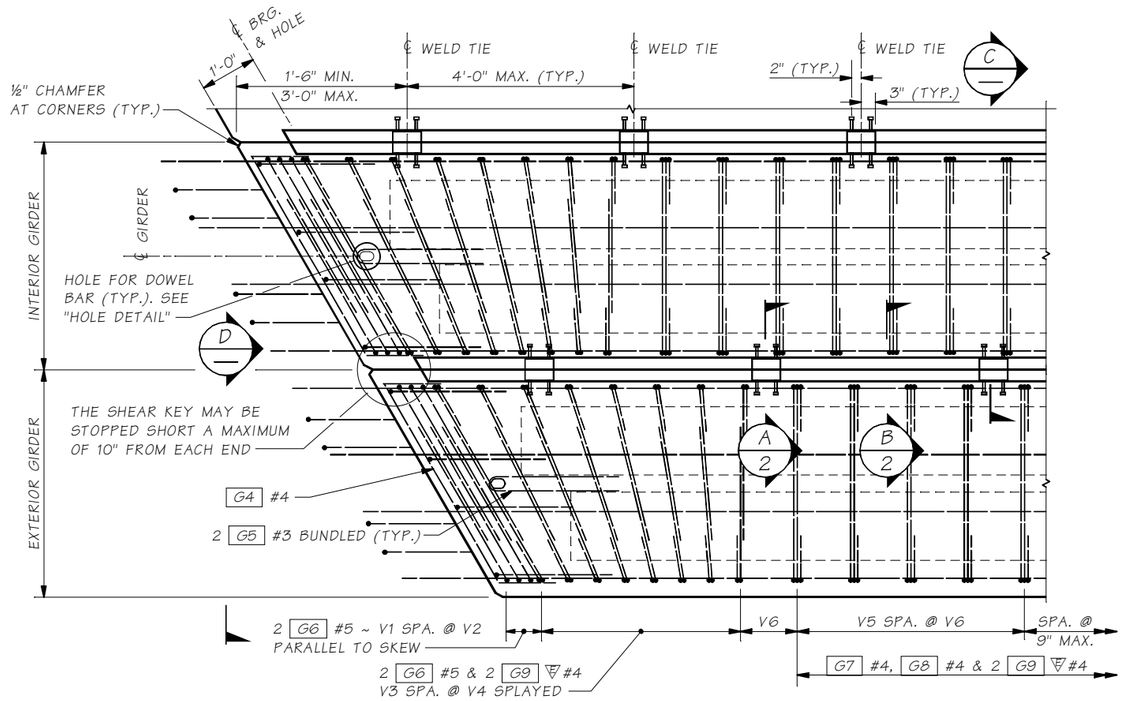

PLAN

S1 BARS NOT SHOWN FOR CLARITY. SEE TRAFFIC BARRIER SHEETS FOR DETAILS AND LOCATION.

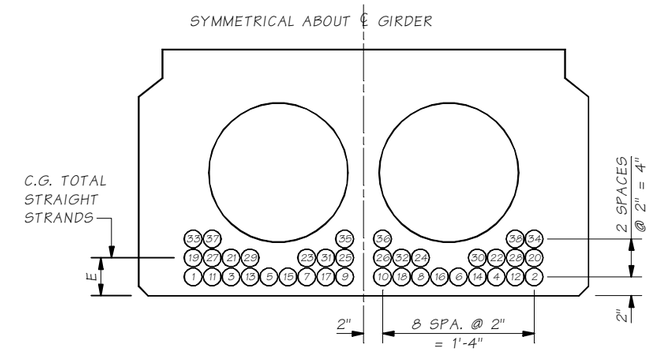

STRAND PATTERN

STRAIGHT STRAND LOCATION SEQUENCE SHALL BE AS SHOWN (1), (2) ETC.

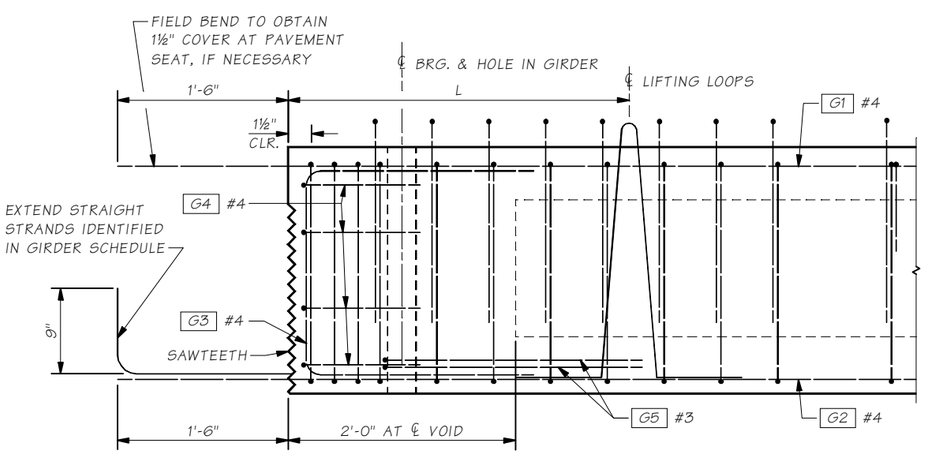

ELEVATION

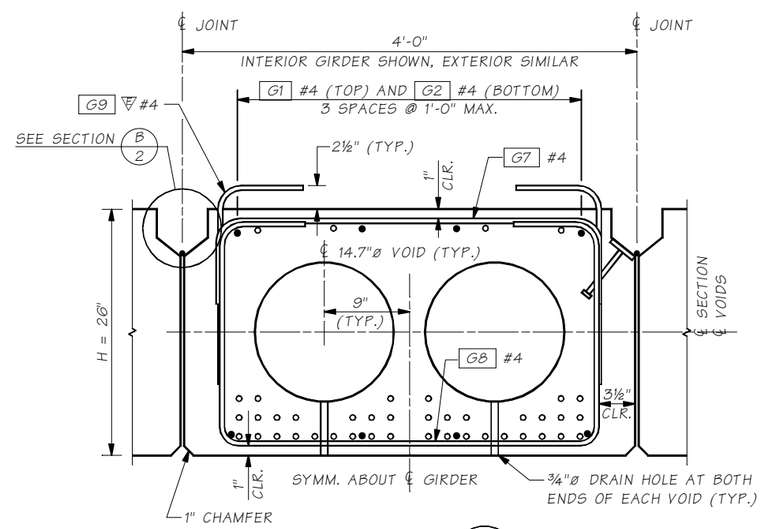

SECTION C

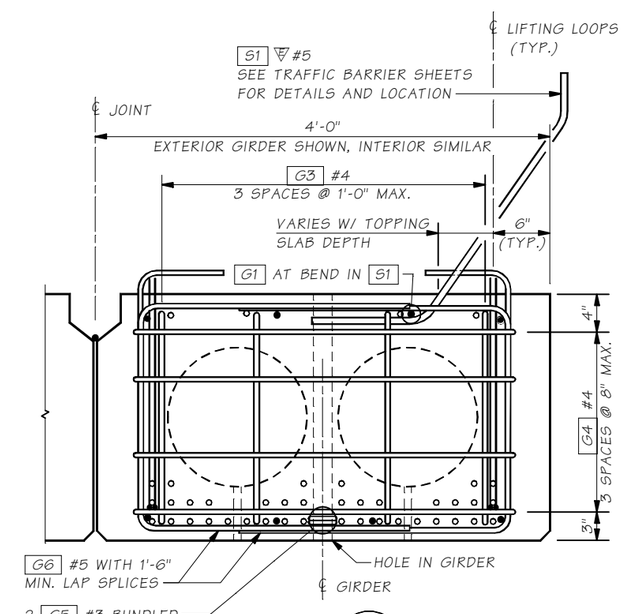

VIEW D

SAWTEETH NOT SHOWN

Bridge Design Engr.	M:\STANDARDS\Girders\Flat Slab\SLAB 26 - 1 OF 2.MAN				REGION NO.	STATE	FED. AID PROJ. NO.	SHEET NO. / TOTAL SHEETS
Supervisor					10	WASH.		
Designed By								
Checked By								
Detailed By					JOB NUMBER			
Bridge Projects Engr.								
Prelim. Plan By								
Architect/Specialist	DATE	REVISION	BY	APP'D				

Thu Jan 26 08:32:07 2012

BRIDGE AND STRUCTURES OFFICE

Washington State Department of Transportation

STANDARD PRESTRESSED CONCRETE GIRDERS

26" SLAB GIRDER DETAILS 1 OF 2

BRIDGE SHEET NO. — SHEET — OF — SHEETS

Last revised on : 7/8/2011

SR. 5.6-A8-4 FILE NO. SHEET