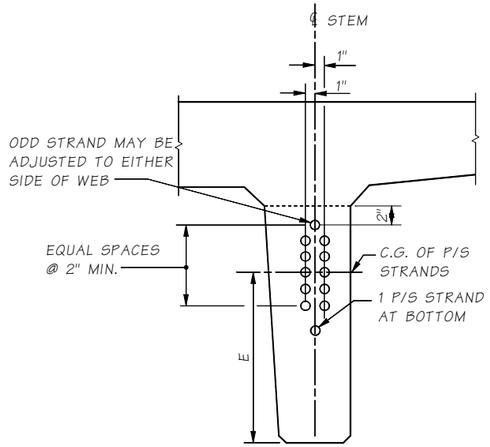

STRAND PATTERN AT GIRDER END

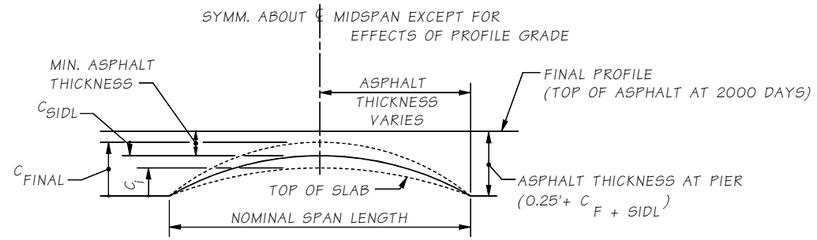

CAMBER DETAIL

C_i = CAMBER AT TRANSFER DUE TO PRESTRESSING AND GIRDER SELF WEIGHT.

C_{FINAL} = CAMBER AT 2000 DAYS.

C_{SIDL} = DEFLECTION DUE TO WEIGHT OF ACP OVERLAY AND TRAFFIC BARRIER.

$C_{F+SIDL} = C_{FINAL} + C_{SIDL}$

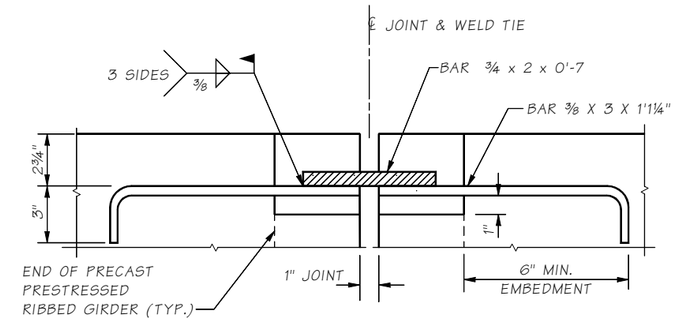

LONGITUDINAL WELD TIE DETAIL

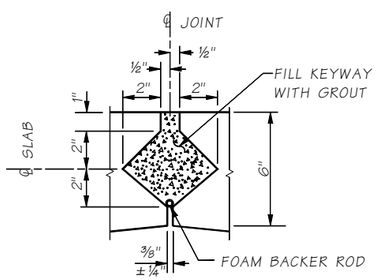

SECTION A/1
KEYWAY ALTERNATE 1

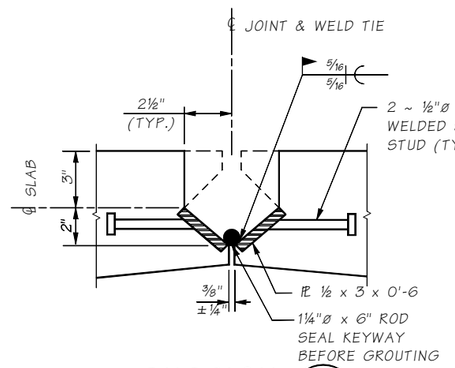

SECTION B/1
WELD TIE ALTERNATE #1

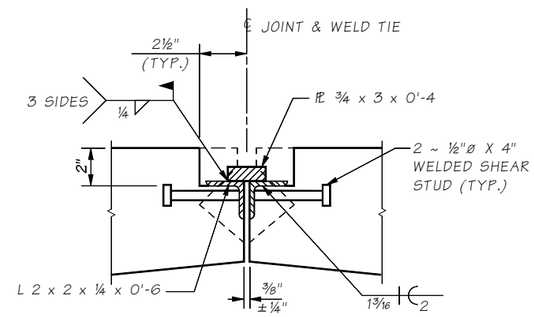

SECTION B/1
WELD TIE ALTERNATE #2

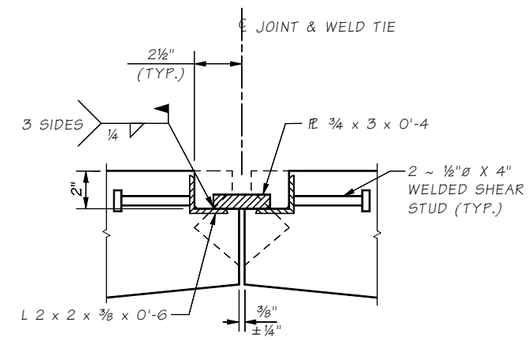

SECTION B/1
WELD TIE ALTERNATE #3

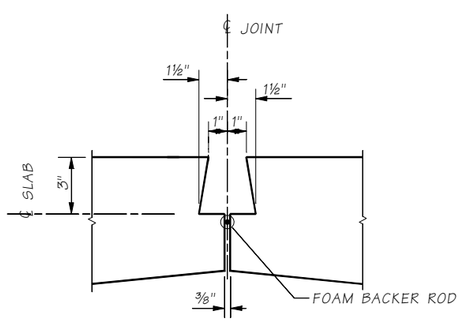

SECTION A/1
KEYWAY ALTENATE 2

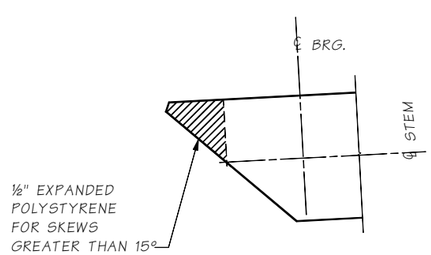

PLAN

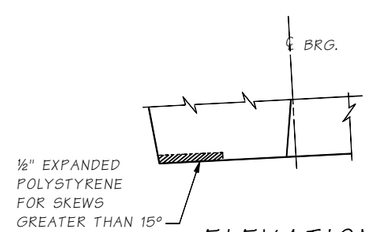

ELEVATION

STEM RECESS DETAIL

DESIGN TABLE

PLAN LENGTH (FT.)	NOMINAL SPAN CTR. TO CTR. BEARING (FT.)	HARP POINT (☐ x PLAN LENGTH)	NO. STRANDS	DIMENSION "W"	F ℄ (IN.)	DISTANCE "E" TO C.G.S. AT END BLOCK (IN.)	CONCRETE COMPRESSIVE STRENGTH		ESTIMATED DEFLECTION AT MIDSPAN (IN.)		
							INITIAL AT RELEASE (KSI)	FINAL AT 28 DAYS (KSI)	UPWARD AT TRANSFER OF PRESTRESS (Δ1)	FINAL UPWARD FOR RIBBED GIRDER ONLY (Δ 2000)	FINAL DOWNWARD DUE TO SUPER IMPOSED DEAD LOAD(Δ SDL)

SHEET ____ OF ____

JOB NO. ____

SR ____

5.6-A23-2

Bridge Design Engr.	M:\STANDARDS\Girders\Double Tee Girders\DOUBLE TEE - 2.man								
Supervisor					REGION NO.	STATE	FED. AID PROJ. NO.	SHEET NO.	TOTAL SHEETS
Designed By					10	WASH.			
Checked By									
Detailed By					JOB NUMBER				
Bridge Projects Engr.									
Prelim. Plan By									
Architect/Specialist	DATE	REVISION	BY	APP'D					

Tue Apr 29 13:52:28 2008

BRIDGE AND STRUCTURES OFFICE

Washington State Department of Transportation

STANDARD PRESTRESSED CONCRETE GIRDERS

RIBBED GIRDER DETAILS 2 OF 2

BRIDGE SHEET NO.

SHEET ____ OF ____ SHEETS