Washington Transportation Framework for GIS Project (WA-Trans)

Washington GIS Conference

May 11, 2005

Agenda

- Brief Background of WA-Trans
- WA-Trans Data Model and Standards
- Architecture
- Pilot Project and Funding
- Conclusion

Transportation Framework (WA-Trans)

- A Statewide Transportation Database for GIS:
  - Location-based transportation data,
  - Best available data from all levels of governments and tribes,
  - Covers roads, rails, ferries, aviation, ports and non-motorized transportation infrastructure,
  - Seamless, connected, consistent and continuous data between jurisdictions, boundaries and other framework layers,
  - Useful for a wide variety of business needs.

Project Organization

- WSDOT Facilitated.
- Partnerships with counties, cities, planning offices, tribal nations, transit organizations, freight, federal agencies, and private organizations.
- Steering committee – decision makers, representatives from different levels and disciplines of government.

Who Is Working On This?

- WSDOT – lead
- 11 State agencies
- 11 Cities
- 23 Counties
- 5 Regional planning offices
- 7 Federal Agencies
- 9 Tribes
- 3 Transit Organizations
- Freight Interests
- & more!

Project Steps

- Initiation – Chartering, Business Needs Assessment.
- Analysis – Data Model, Standards, Tool Definition, Architecture, Scoping.
- Pilot Projects – Test and prove concept, risk mitigation.
- Implementation – Building it statewide.
- Maintenance – Continuing to get the best data and improve the quality of the data and access to the data.

Work Completed So Far

- Business Needs Assessment,
- Return on Investment (in progress),
- Cost Benefit Analysis for WSDOT business areas (2 in progress),
- Data Model and Standards,
- Conceptual Architecture,
- Translator Requirements,
- Two Pilots in Progress – one underway in early stages and the other one partially funded to mid-summer.

Areas of Business Needs

- Economic Analysis
- Emergency Management
- Emergency Response
- Environmental Assessment
- Forest Roads Management
- Forest Fire Planning & Response
- Homeland Security
- Inter-jurisdictional Communication
- Law Enforcement
- Public Transportation
- Social Services
- Supporting Federal Initiatives (e.g., The National Map, Bureau of Census Tiger/MAF Modernization)
- Transportation Planning
- Transportation Maintenance
- Traffic Safety
- Tribal Treaty Rights
- Etc.

WA-Trans Data Model and Standards

Scope of Data Model

- WA-Trans Data Model and Standards include:
  - Roads,
  - Rail,
  - Ferries,
  - Aviation,
  - Non-motorized Transportation,
  - Marine and River Ports will be added.

History of Data Model

- Initially based on Oregon All-Roads model.
- Due to business needs in transportation planning, emergency management and economic development, the model had to be multi-modal.
- Worked with WSDOT Rail, WSDOT Aviation, WA State Ferries, and WA-Trans Steering Committee to develop current design.
- Federal standards created by FGDC have been used as a basis for this model.

Segments and Points

- The WA-Trans Model is based upon segments and points to represent the transportation features.
- The model is a SQL model (transactional) with BLOBs to store geometry.
- This is a very flexible model.
- Most current research in GIS-T supports this type of model.

Data Model (Conceptual View)

Segment Point Model

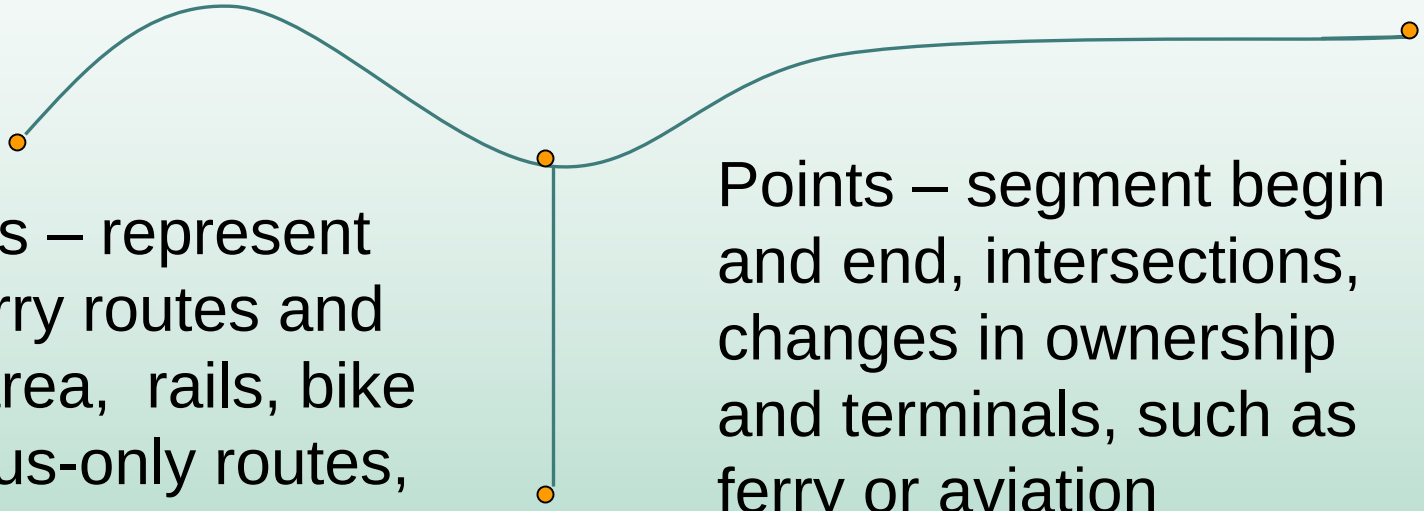

Segments – represent roads, ferry routes and staging area, rails, bike routes, bus-only routes, HOV, non-motorized, aviation runway.

Points – segment begin and end, intersections, changes in ownership and terminals, such as ferry or aviation terminals.

Events – Various core attributes are included. Some of this will be part of the core data structure, but much of it will be event-based to minimize need for segmentation of routes.

Segments and Points – A Conceptual View

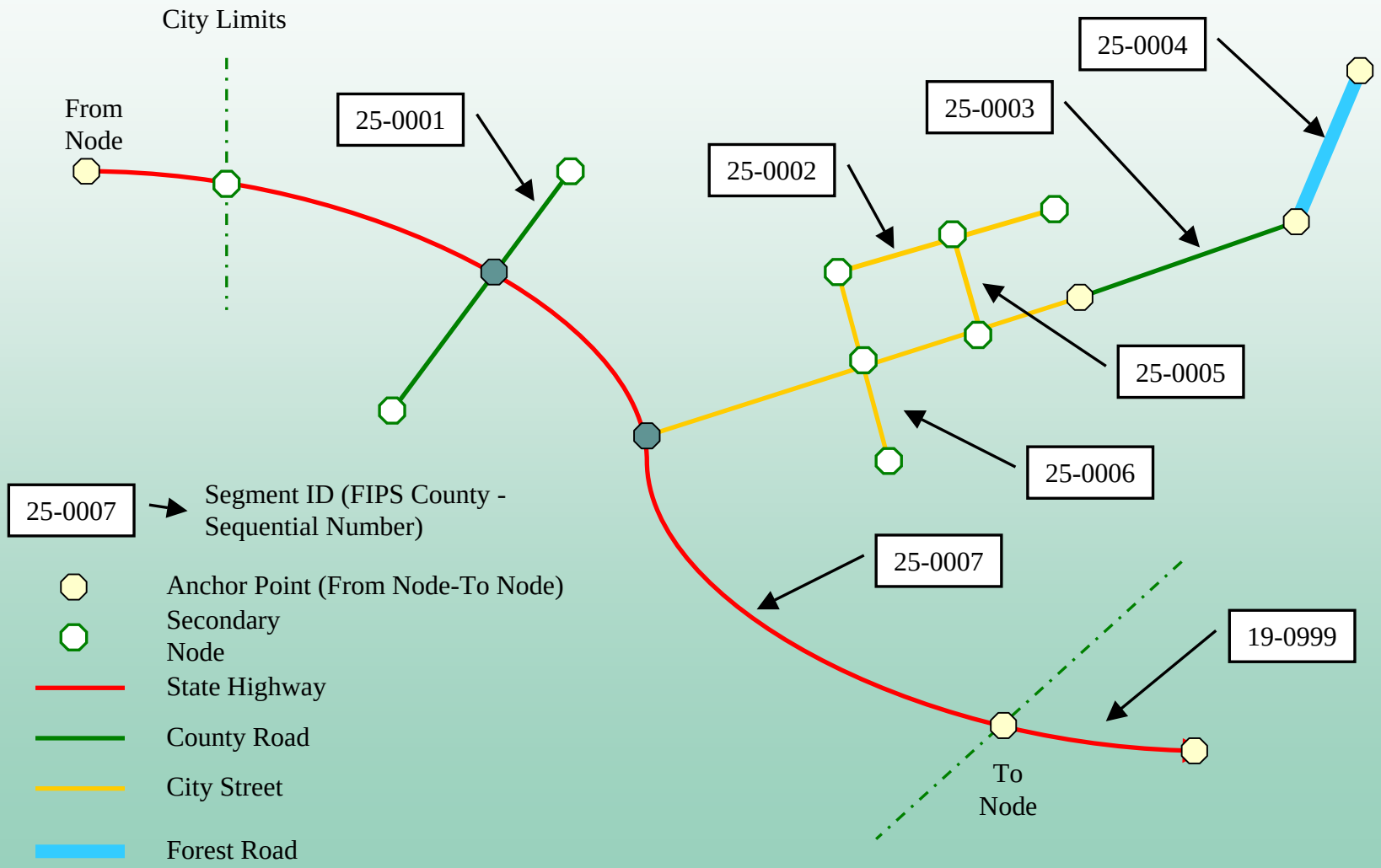

WA-Trans Data Model

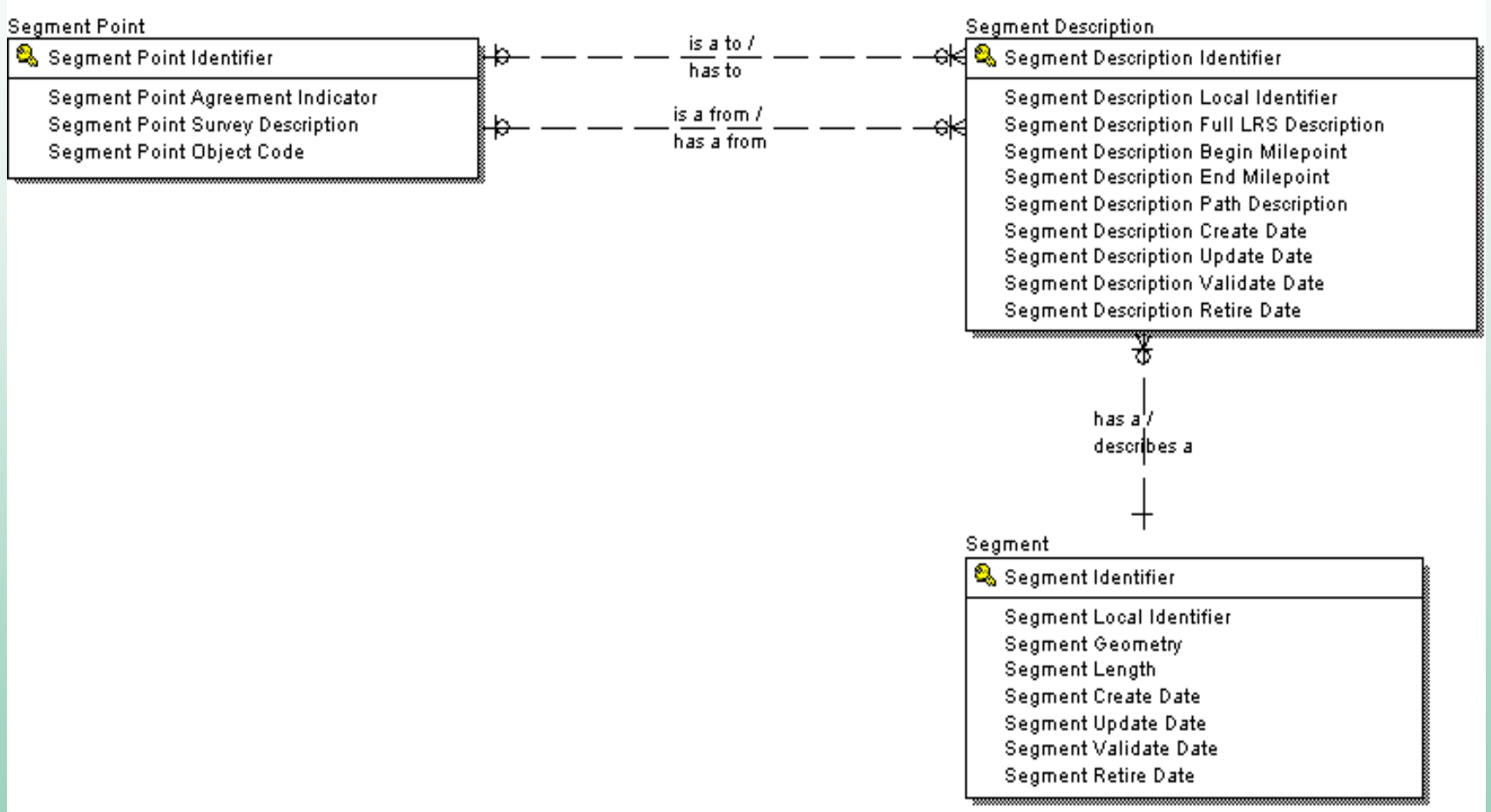

Characteristics of Segments and Points

- Multiple descriptions are allowed of segments. This supports different names by different levels of government for the same feature,
- Segment and point identifiers are perpetual. They are retired when the infrastructure changes so we can historically reproduce that feature at any specific date,
- Descriptions are also perpetual and can retire independent of segments and points,
- Dates of interest: create, update, validate, retire.

WA-Trans Data Model

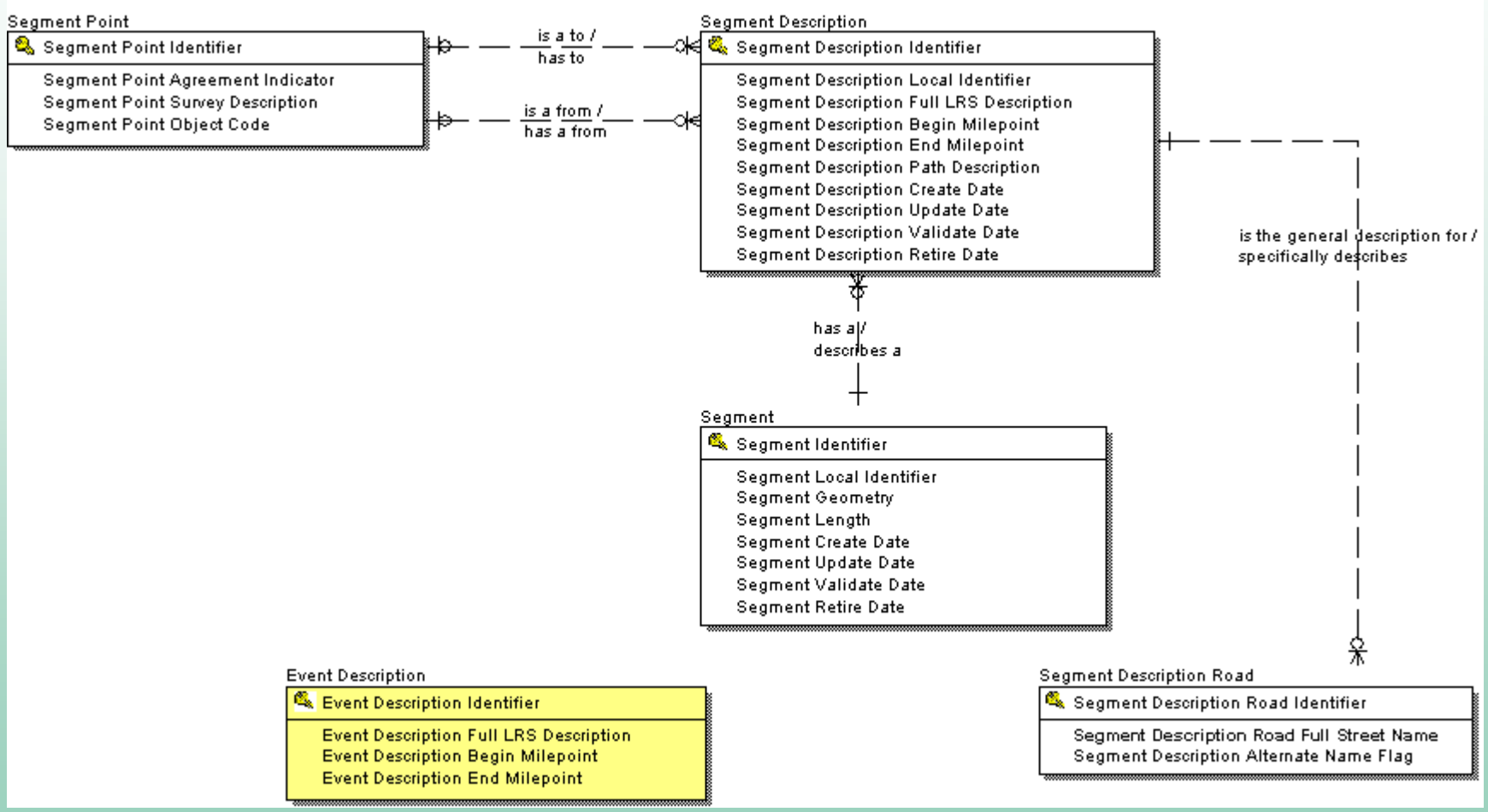

Linear Reference Systems

- LRS supported explicitly:
  - Route milepost (used by Fed, State and County),
  - Addresses (used by County and City and some State and Fed).
- LRS supported implicitly:
  - Distance from intersection (used by City).

Event Data

- Event data for roads includes:
  - Surface Information,
  - HOV Information,
  - Speed Limits,
  - Number of Lanes,
  - Federal Functional Classification,
  - Structures,
  - Non-motorized use,
  - Indian reservation road information (still to be added).

WA-Trans Data Model

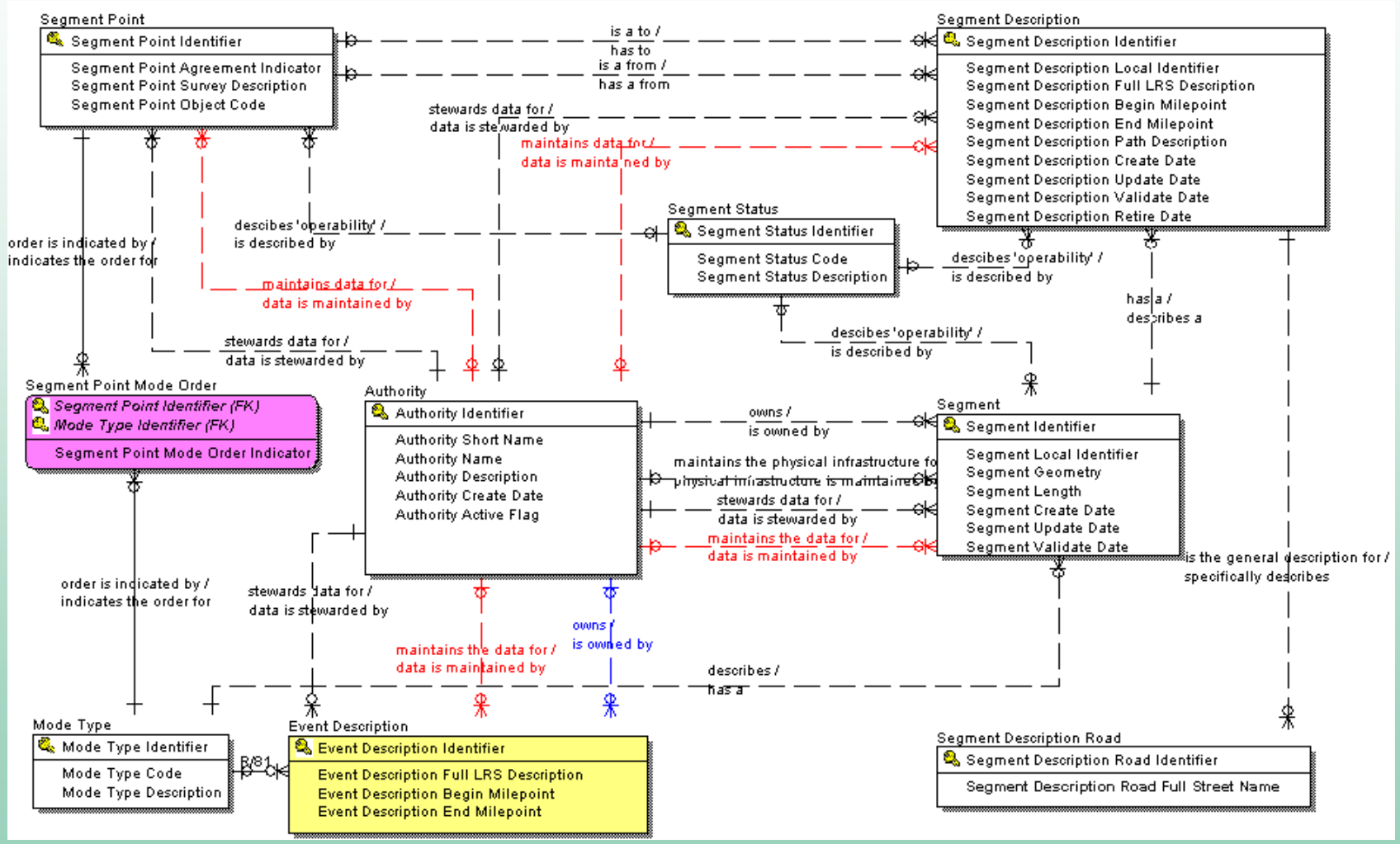

WA-Trans Architecture

Major Components of WA-Trans Architecture

- Translators – Bringing data into and out of the system so the data providers and users don't have to change their data formats.
- Integration Software – Creating "seamless" representation of linear transportation features and making sure all necessary information is there. Integrating LRS is also needed.
- Quality Assurance/Quality Control – Providing tools and processes to evaluate data to make sure it is accurate and complete.

Conceptual Architecture

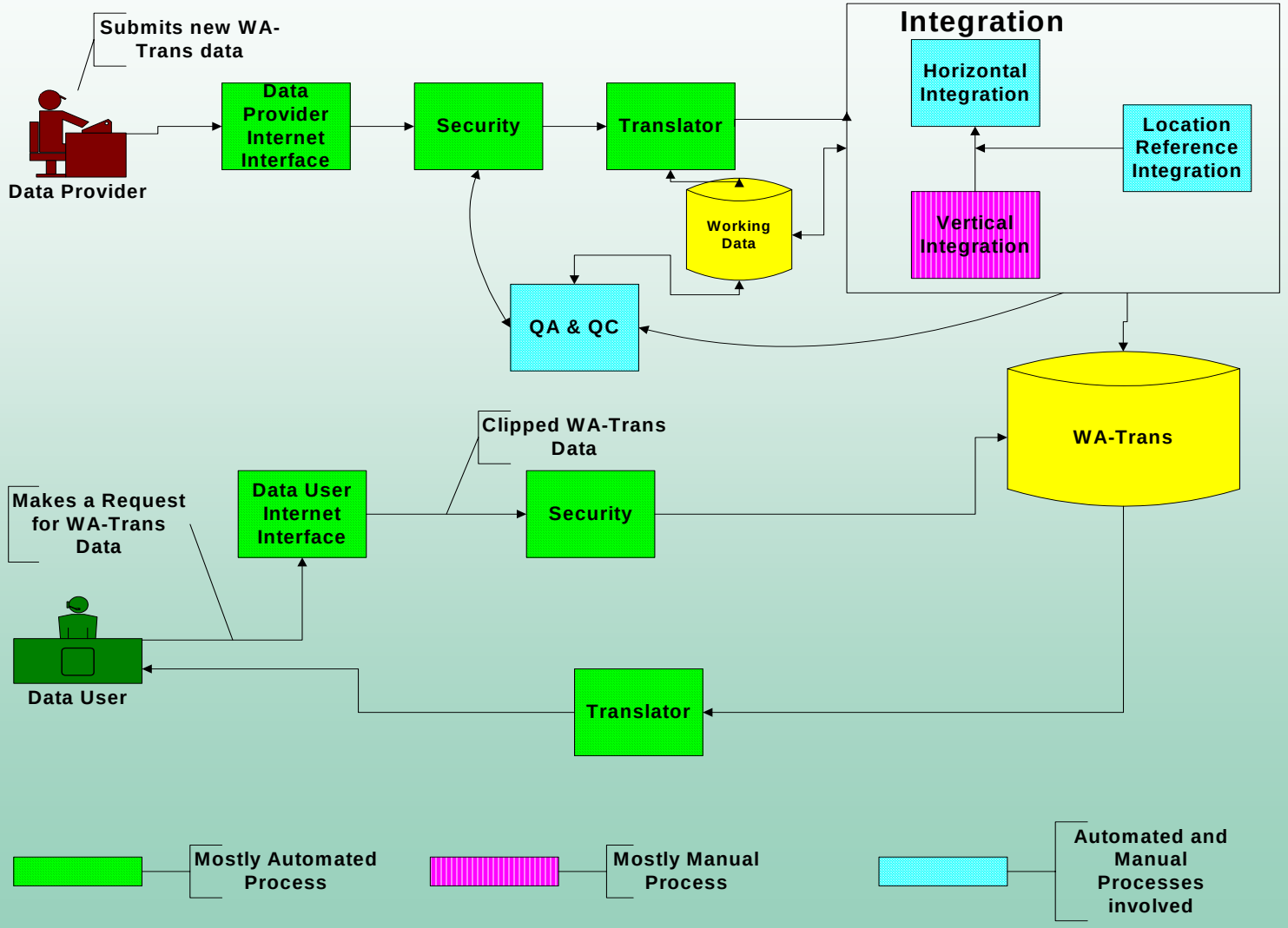

Pilot Projects and Funding

Funding Received or Approved

- Microsoft Grant for $29,000, for enterprise agreement customers was used for Translator Requirements,
- US Geological Survey National Spatial Data Infrastructure (NSDI) Cooperative Agreement Program for $75,000 with 100% match,
- Transportation Pooled Fund Program – So far we have commitments totaling $190,000. These commitments are renewed annually for three years. Vendors can partner in this effort!

Puget Sound Pilot Phase I and II

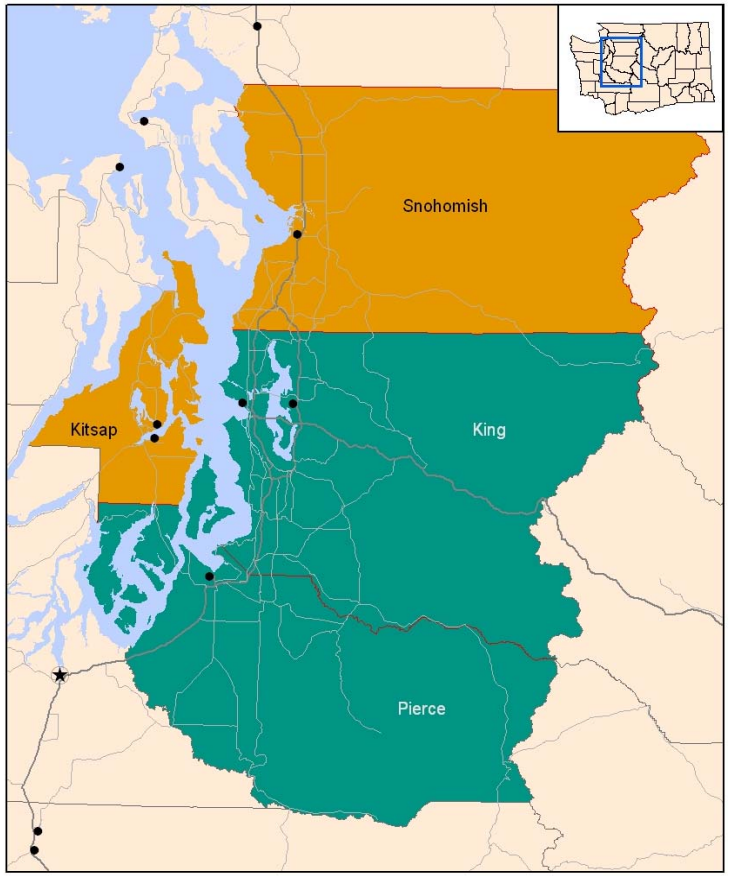

USGS CAP Funding
Phase I

Proposed PSRC Funding
Phase II

Puget Sound Pilot

- Phase I funded by NSDI CAP Grant.
- Partners include Pierce and King County and others who may wish to share data.
- Puget Sound Regional Council will perform GIS work.
- Translator will be completed, tested by Pierce County and used for pilot.
- Data will be provided to The National Map served by the USGS.
- We are looking for groups who would like to test and document the usability of the resulting data.
- First draft project charter/plan complete.

Puget Sound Pilot

- Phase II proposed for funding by Puget Sound Regional Council.
- Partners with Snohomish and Kitsap County and others who may wish to share data.
- Puget Sound Regional Council will perform GIS work.
- Depends upon funding.

Funding Received

Transportation Pooled Fund Pilot

- Washington is leading the effort. Oregon, Ohio and Tennessee DOTs have committed to joining. Idaho is interested. We have $190,000 committed for the first two years to date.
- Project has been posted with the National Transportation Pooled Fund Website to seek additional partners.
- Seeking $30,000 per state per year to participate for three years although they can get in with $10,000.
- We can also support partnerships with local governments, universities and colleges and private industry.

Funding Received

Transportation Pooled Fund Pilot

- Software-focused:
  - Complete work on Translator,
  - Research and develop tools for:
    - Internet interfaces for input and output,
    - Data integration,
    - Quality Assurance and Quality Control,
    - Location Referencing Management.

Transportation Pooled Fund Pilot

Data Developed to Test Software

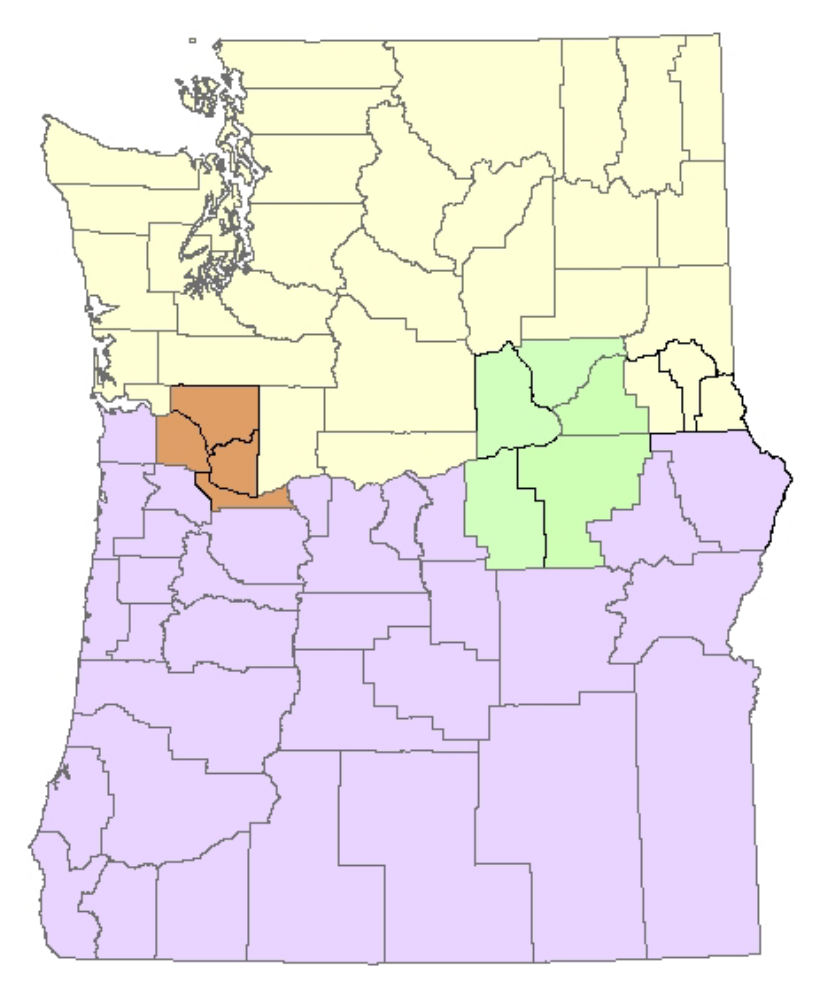

Phase I

Benton, Franklin and Walla Walla Counties in WA and Morrow and Umatilla Counties in OR

Phase II

Clark and Cowlitz Counties in WA and Columbia and Multnomah Counties in OR

Contact Information:

- Tami Griffin

  Washington State Department of Transportation

  Geographic Services

  1655 2nd Ave.; Tumwater, WA 98512-6951

  PO Box 47384; Olympia, WA 98504-7384

  (360) 709-5513

  Griffit@wsdot.wa.gov

www.wsdot.wa.gov/mapsdata/transframework/default.htm

Index - Microsoft Internet Explorer provided by WSDOT Version: 5.5

File Edit View Favorites Tools Help

Back Search Favorites History

Address http://www.wsdot.wa.gov/mapsdata/transframework/default.htm Go Links

Washington State Department of Transportation

News | Site Index | Contact WSDOT | WSDOT Home

TRAFFIC & ROADS | PROJECTS | BUSINESS | ENVIRONMENTAL | MAPS & DATA

TRANSPORTATION FRAMEWORK

PROJECT LINKS

- WA-Trans Home
- Steering Committee
- WA-Trans Partners
- Project History
- Project Management Deliverables
  - >>Status Reports
  - >>Presentations
  - >>Project Documents
  - >>Earlier Document Versions
- FAQ
- Acronyms
- Related Links
- Extra Mile Awards
- WA-Trans Feedback

Our Sponsors

Washington Geographic Information Council

- WA. GeoSpatial Framework

The Washington State Transportation Framework

Welcome to the Washington Transportation Framework Project Internet site! The Washington Geographic Information Council, Framework Management Group, Washington State Department of Natural Resources and the Washington State Department of Transportation sponsor this site.

Project Manager:
Tami Griffin
360.709.5513
GriffiT@wsdot.wa.gov

NEW

Business Needs as of October 22, 2002
Status Report as of October 15, 2002
Risk Assessment Draft as of December 4, 2002

The Washington Statewide Transportation Framework Project (WA-Trans) was organized to create an electronic map of transportation data for use in Geographic Information Systems (GIS) across the state. This transportation data (called the transportation layer) will work with other statewide layers being developed or in existence including hydrography (water ways), cadastral (property boundaries), and orthophotography. For more detail please read the Executive Summary.

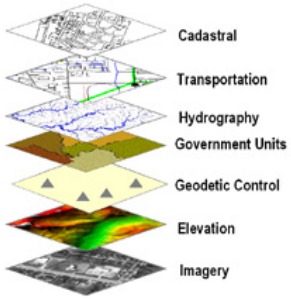

WA-Trans is preparing for a new effort. A new full-time project manager has been hired

Trusted sites