Washington Transportation Framework for GIS Project (WA-Trans)

WA-Trans Partners Meeting

March 9, 2005

Next Meeting

- September 21, 2005
- 9 a.m. – noon
- 310 Maple Park Ave. SE in Olympia
- Room 2F22 (Shamen Room)
- Video-conferencing at WSDOT Regional Office
  - Shoreline, Vancouver, Yakima, Wenatchee, Spokane
  - Additional locations if arranged in advance

New Participants

- New Assistant Project Manager – Mark Hotz,
- Executive Sponsor – Paula Hammond; WSDOT Chief of Staff,
- City of Leavenworth, City of Chelan,
- Whatcom County Public Works,
- Spokane County Regional Transportation Council,
- Love GIS Consulting,
- Department of Information Services.

Milestones Met

- Completed Data Model and Standards,
- Completed Department of Information Services "Risk/Severity" analysis,
- Completed Requirements for Translator,
- Completed High Level Tool Description for Transportation Pooled Fund Project (WA/OR Pilots),
- Completed first draft charter/plan for Puget Sound Pilot.

Translator Requirements

- Funded through a grant from Microsoft for customers with an enterprise agreement with work done by Bfirst Solutions, Inc..
- Used to define what the translator needs to do so we can write a Request for Proposal (RFP).
- The goal of the RFP is to purchase and customize a translator for WA-Trans, OR All-Roads and other states who participate in the Transportation Pooled Research Project.

Translator Requirements

- Provide a bidirectional data translator that operates as a filter for data from a local format and schema into the WA-Trans format (and others) and from the WA-Trans format and schema back into local format and schema and federal spatial transportation exchange standards.
- Provide components that enable the users to manipulate the imported or exported data into the desired redefinition as necessary. Save that process for each user.

Translator Requirements

- Provide a data prescreening process to ensure minimum data standards compliance,
- Provide users with the ability to view logging and transactions to ensure data validation and the ability to manually augment the data correction.
- Provide a method to detect new or changed data
- The ultimate software solution shall provide tools and processes to automatically add the minimum metadata (through elicitation of users) to WA-Trans.

Data Import Process

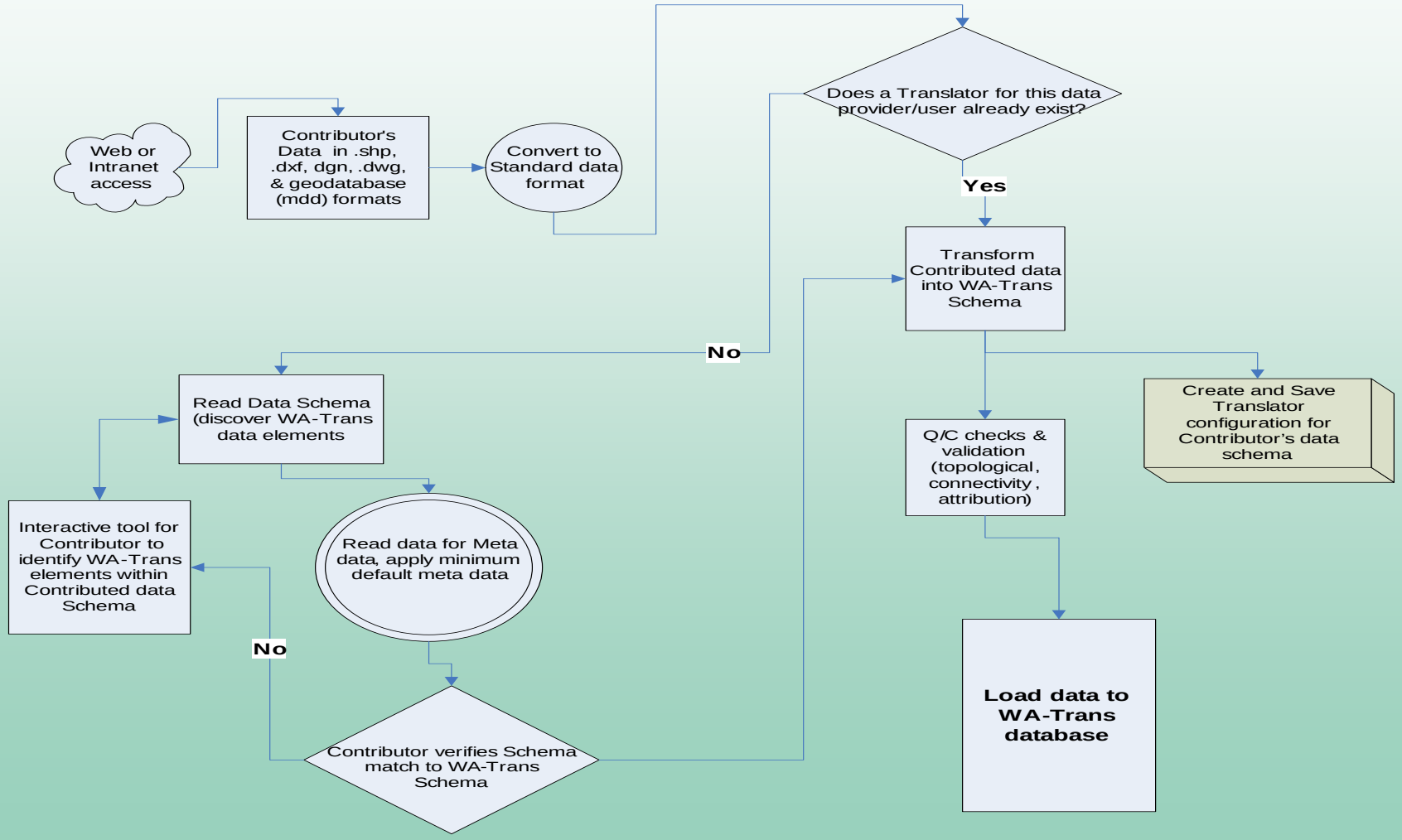

Data Export Process

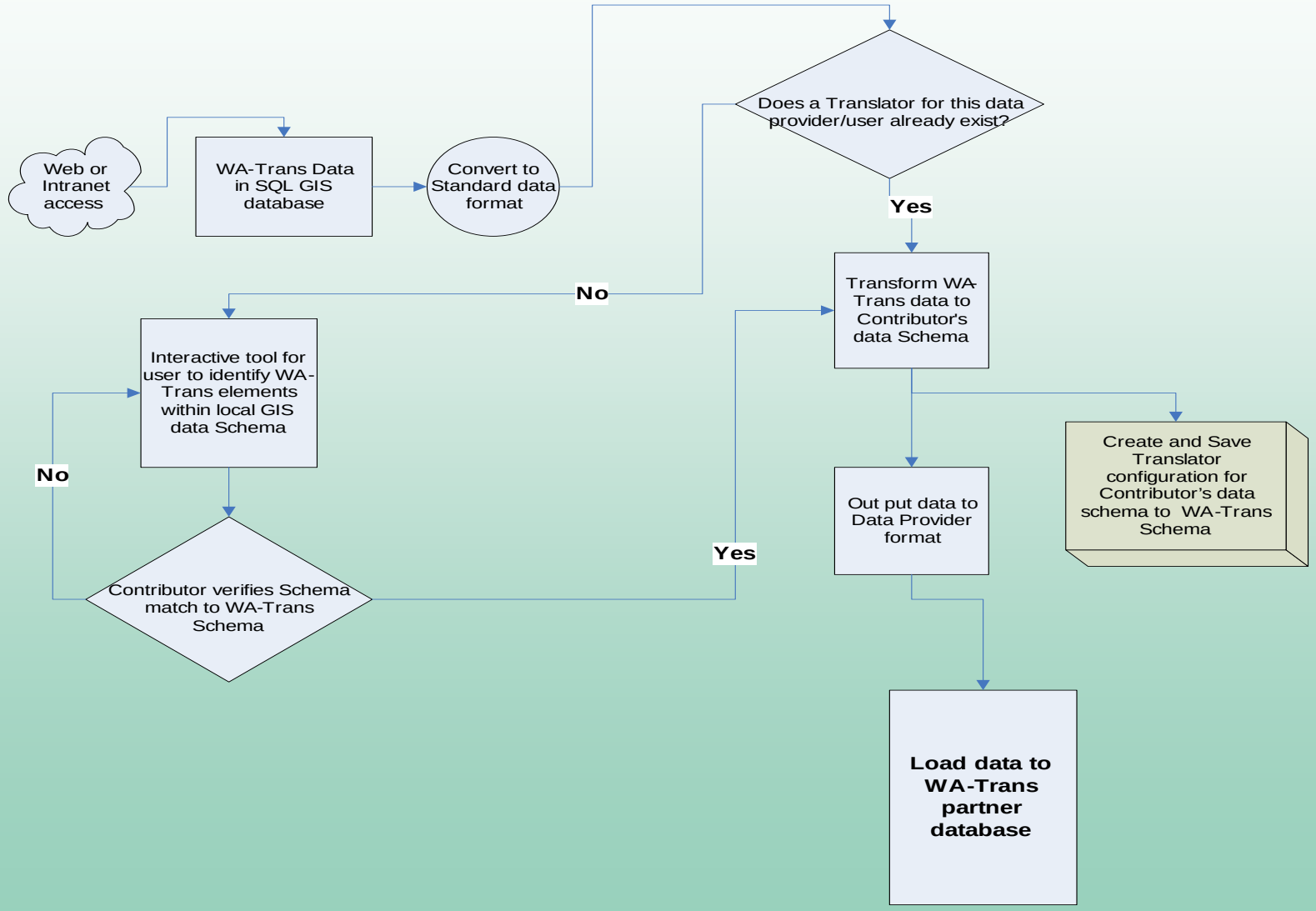

Puget Sound Pilot Phase I and II

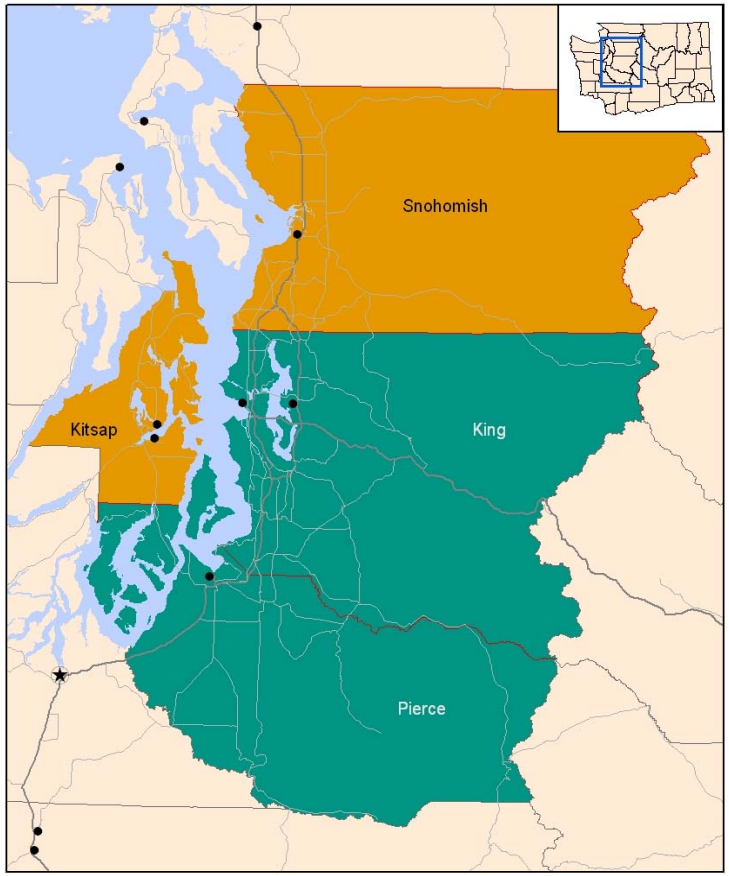

USGS CAP Funding
Phase I

Proposed PSRC Funding
Phase II

Puget Sound Pilot

- Phase I funded by NSDI CAP Grant.
- Partners with Pierce and King County and others who may wish to share data.
- Puget Sound Regional Council will perform GIS work.
- Translator will be completed, tested and used.
- Data will be provided to The National Map served from Menlo Park, CA by the USGS.
- We are looking for groups who would like to test and document the usability of the resulting data.
- First draft project charter/plan complete.

Puget Sound Pilot

- Phase II proposed for funding by Puget Sound Regional Council.
- Partners with Snohomish and Kitsap County and others who may wish to share data.
- Puget Sound Regional Council will perform GIS work.
- We will be looking for groups who would like to test and document the usability of the results.
- Depends upon funding.

Time Line

- November / December – Complete standards and translator requirements,
- January / February - Develop pilot charter, schedule, budget, establish pilot advisory team,
- March – set up advisory group meetings, write RFP,
- April / May – Vendor demonstrations of translators. Buy or build decision, begin customization or build of translator.

Time Line

- June - August – complete customization, begin data integration and translator test.
- September - October – translate data for The National Map.
- November / December - pilot project completion, lessons learned.

Funding Received

OR/WA Pooled Fund Pilot Proposal

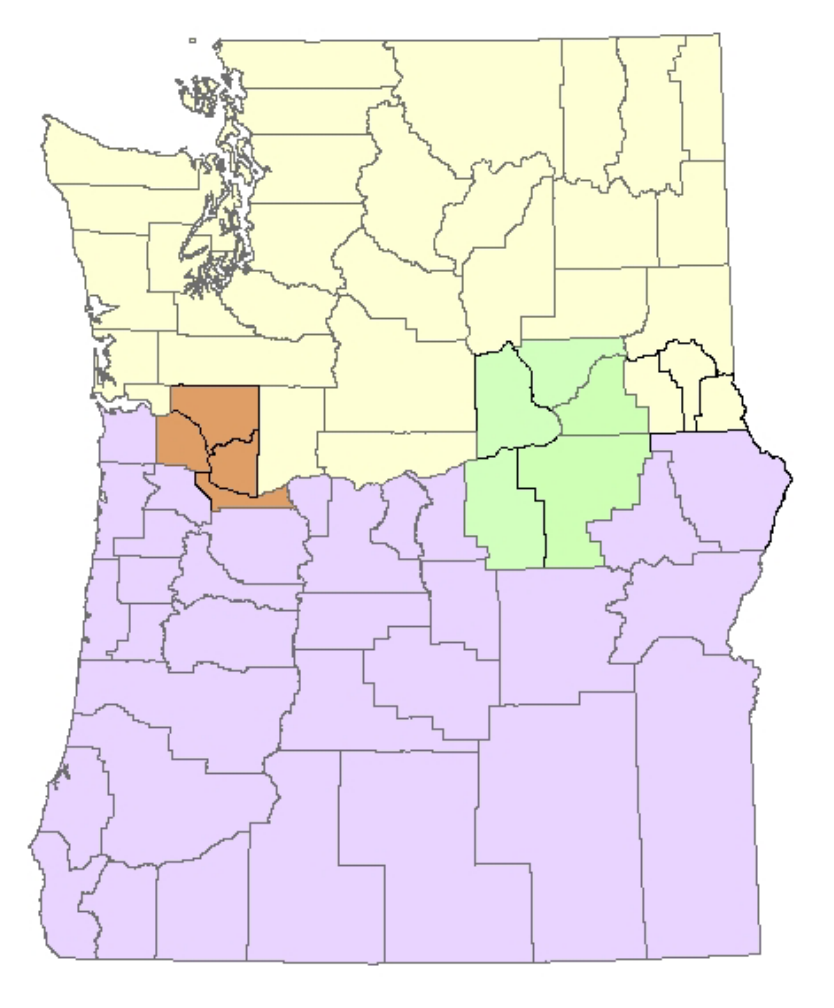

Phase I

Benton, Franklin and Walla Walla Counties in WA and Morrow and Umatilla Counties in OR

Phase II

Clark and Cowlitz Counties in WA and Columbia and Multnomah Counties in OR

Funding Received

OR/WA Pooled Fund Pilot Proposal

- Software focused:
  - Complete any work on Translator needed,
  - Internet interfaces for input and output,
  - Data Integration,
  - Quality Assurance and Quality Control,
  - Location Referencing Management.

TPR Participation Options

- WSDOT is Lead ($30,000 this next year),
- ODOT has contributed ($35,000 this next year),
- We can partner with other DOTs, FHWA, Local Governments, Universities and Colleges and Private Companies.
- Each commits to some level of contribution and then gets the share in the results ($10K - $30K annually for 3 years).
- I have more detailed information documented if you are interested.

Current Steering Committee Participation

- Tareq Al-zeer – WSDOT
- Roland Behee – Community Transit
- Dave Cullom – WUTC
- Dan Dickson – CRAB
- Tim Young – WSDFW
- Elizabeth Stratton – WSDOT "Freight"
- Jason Guthrie – Lincoln County
- Sarah Schroder – WSDOT IT
- Jerry Harless – PSRC
- Wendy Hawley – US Bureau of Census
- Dave Rideout – Spokane County Engineers
- Sam Bardelson – USGS
- Ian Von-Essen – E-911
- Chuck Buzzard – Pierce County
- David Koch – DIS
- Cathy Udenberg – Walla Walla County

Process & Policies

- Agreement Points and how we establish them. How formal should they be?
- Versioning – create a “snapshot” every year.
- Update Cycles – notifications are passive (on website or in metadata). Data sharing agreements drive update cycles with data providers.

Process & Policies

- Looking at who coordinates data for an area. Considering having the county be coordinator where that is agreeable to all, otherwise we will work individually with each organization.
- Working on sample data sharing agreements. We will work pilots with memorandum of understanding and work to develop data sharing agreements during the pilot.

Next Steps

- Continue to work on policies and processes,
- RFP for Puget Sound Pilot and begin work,
- Solicit partners for Transportation Pooled Fund Project and begin work,
- Complete Return on Investment and Individual Case Studies for Cost Benefit Analysis of project,
- Continue to seek funding.

Work Completed So Far

- **Cost Benefit Analysis for WSDOT business areas (2 in progress)**
- Data Model and Standards
- Translator Requirements
- Two Pilots in Progress – one underway in early stages and the other one partially funded to begin late spring.

Scope of Data Model

- WA-Trans Data Model and Standards include:
  - Roads
  - Rail
  - Ferries
  - Aviation
  - Non-motorized Transportation
  - Marine and River Ports will be added

More Design Considerations

- WA-Trans is NOT a GIS, but a data source for use in GIS
- Address-geocoding and geocoding in general were determined to be the highest priority business need for WA-Trans.
- Accurate center line data a very high priority.
- Update cycles for local governments are generally frequent and lead to accurate address and center line information.

Segments and Points

- The WA-Trans Model is based upon segments and points to represent the transportation features.
  - Segments: roads, runways, ferry routes, ferry staging areas
  - Points: intersections and features (roads, roads and railroads, ferry terminals, airport terminals), begin and end of segments.

Segments and Points – A Conceptual View

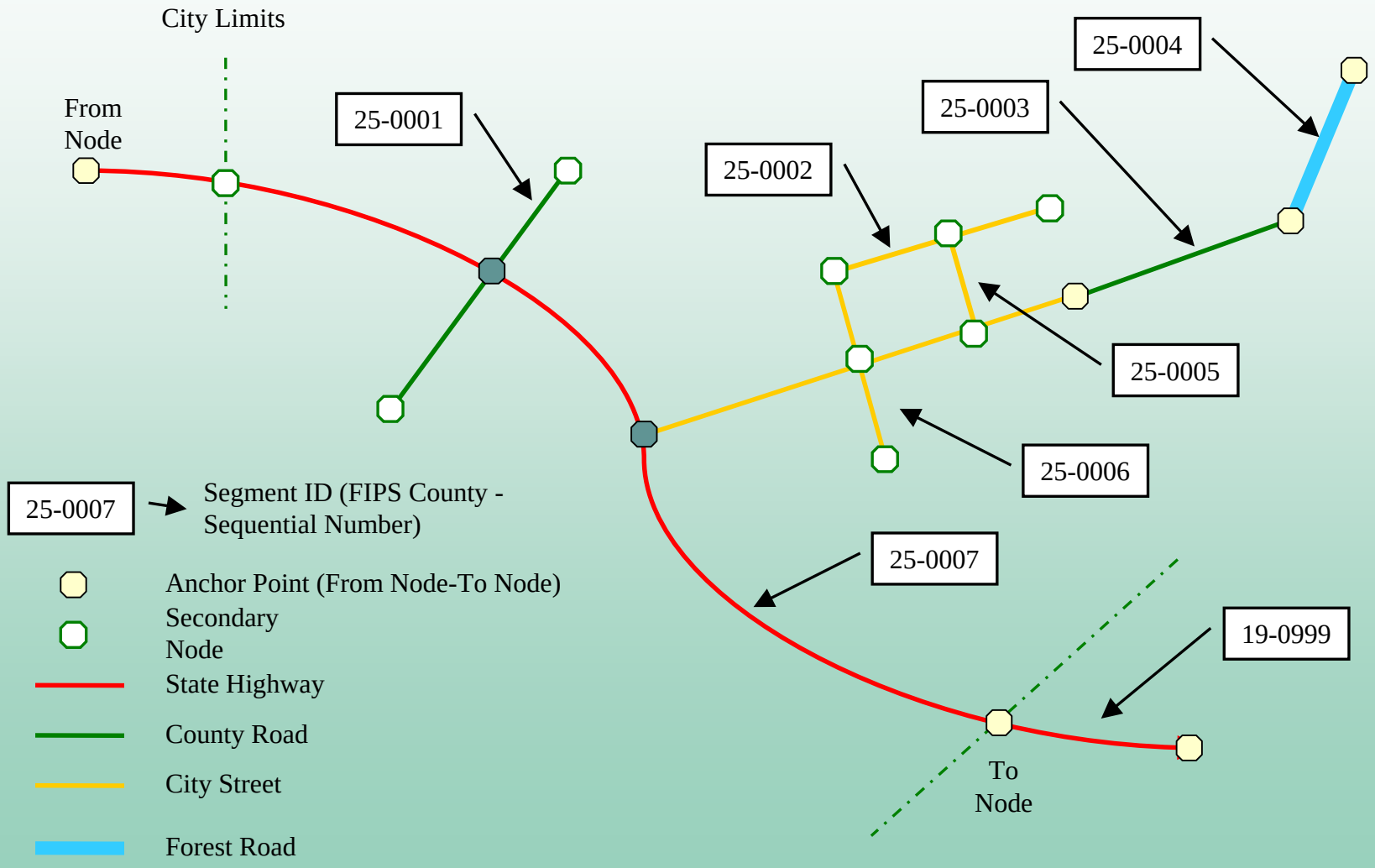

WA-Trans Data Model

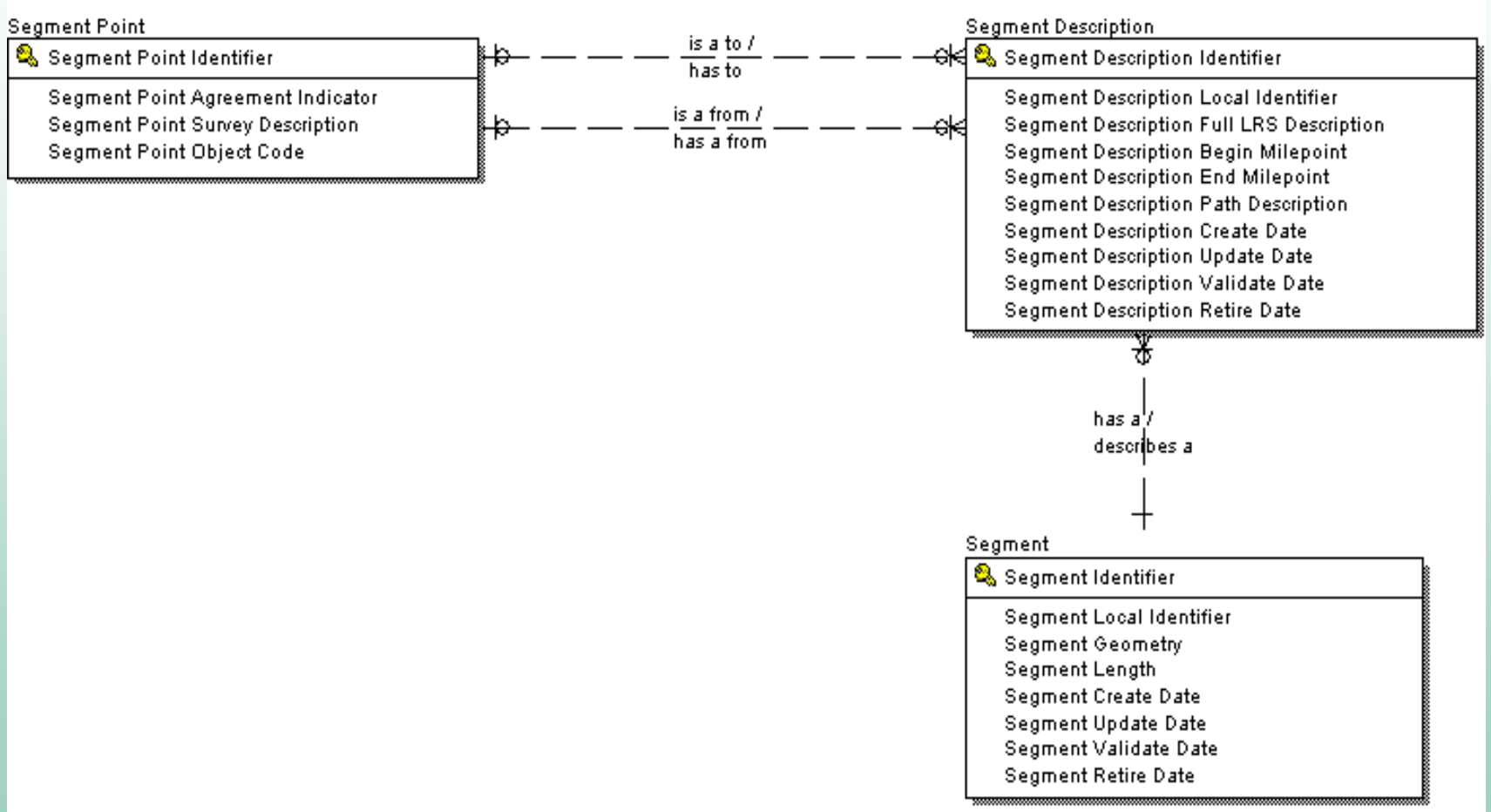

Characteristics of Segments and Points

- Multiple descriptions are allowed of segments. This supports different road names by different levels of government for the same feature.
- Segment and point identifiers are perpetual. They are retired when the road changes so we can historically reproduce that feature at any specific date.
- Descriptions are also perpetual and can retire independent of segments and points.

WA-Trans Data Model

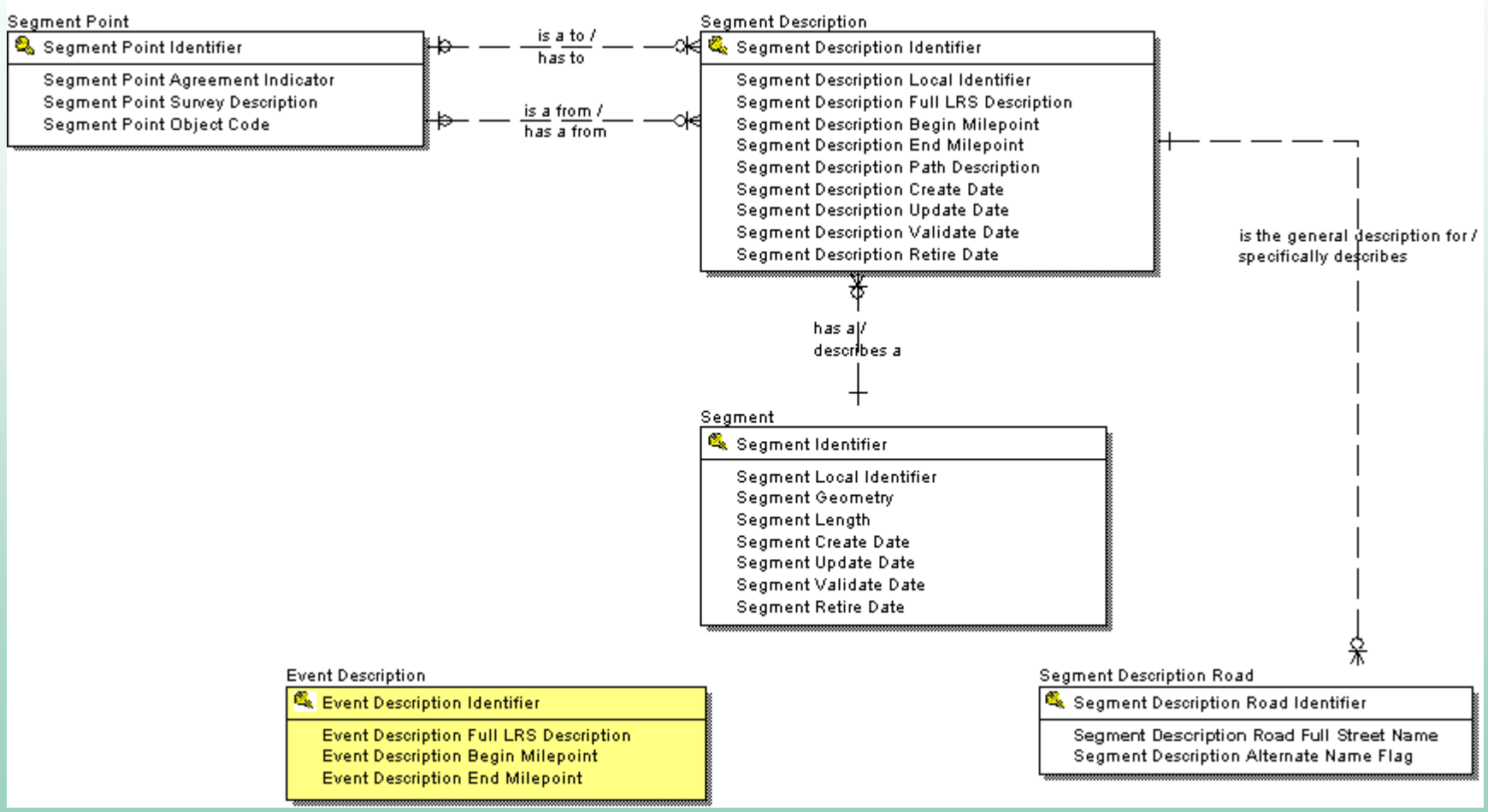

Event Data

- Event data for roads includes:
  - Surface Information
  - HOV Information
  - Speed Limits
  - Number of Lanes
  - Federal Functional Classification
  - Structures
  - Non-motorized use
  - Indian reservation road information (still to be added).

Business Rules for WA-Trans Data

- For each mode segments break at “at-grade” intersections and between jurisdictional boundaries.

- Multi-modal segments using the same “space” will be in separate geometries with coincident locations.

- Any edits, joins, or splits of a segment or segment point geometry forces an update of all associated events tables.

WA-Trans Data Model

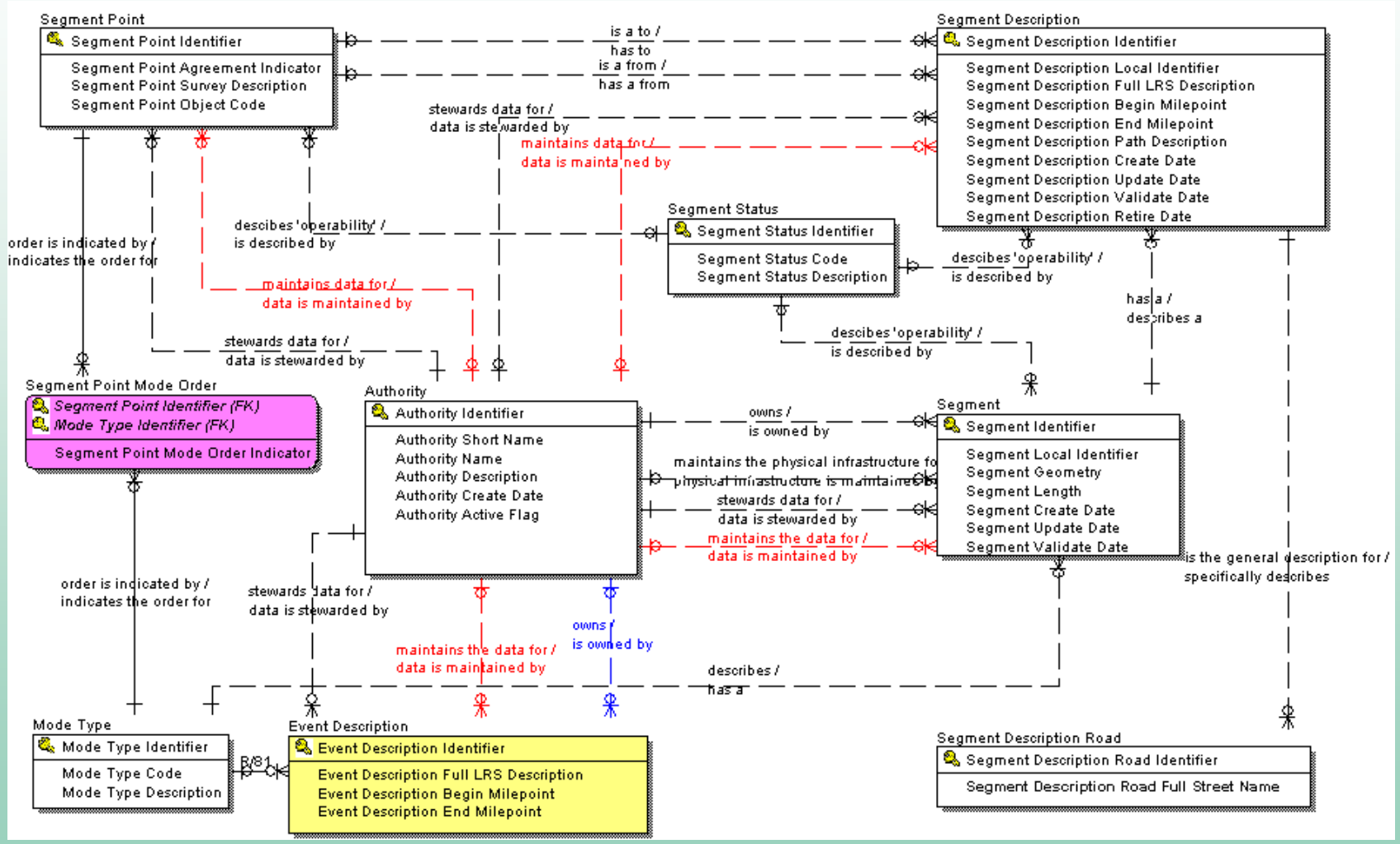

More About WA-Trans

- WA-Trans does not include: concepts such as paths, networks, etc. However, the data is structured to be input to third party software which can turn it into networks.

- WA-Trans does NOT include all data WSDOT needs about the transportation system, but does have keys that allow attaching the additional data to it.