Copyright © 1999 WSDOT TDO
Interchange Viewer: SR 526 - Airport Road
NOT TO SCALE
Not for use for engineering or other purposes requiring dimensional accuracy

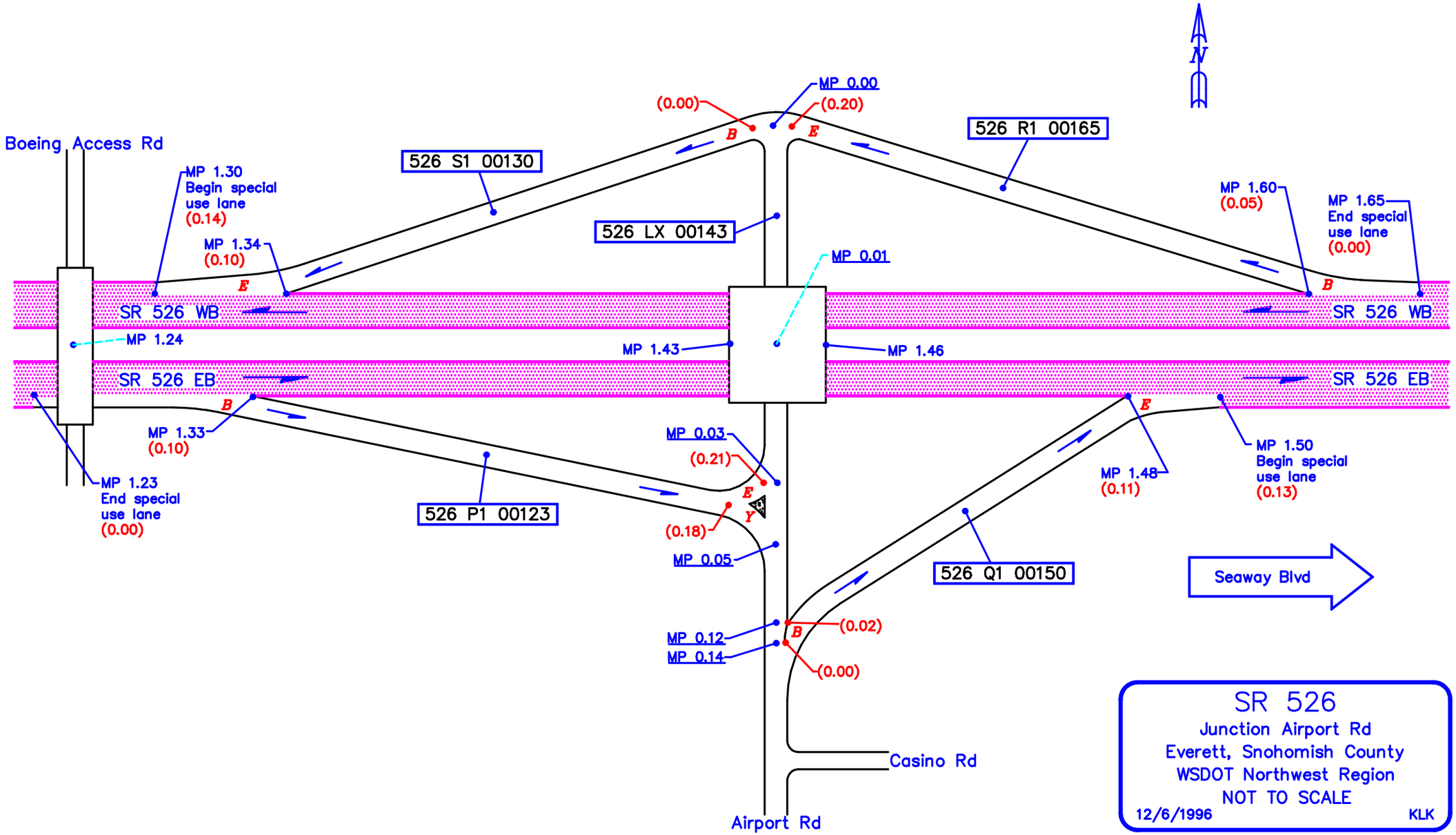

SR 526
Junction Airport Rd
Everett, Snohomish County
WSDOT Northwest Region
NOT TO SCALE
12/6/1996 KLK