Copyright © 1999 WSDOT TDO
Interchange Viewer: SR 167 - SR 516/Willis St
NOT TO SCALE
Not for use for engineering or other purposes requiring dimensional accuracy

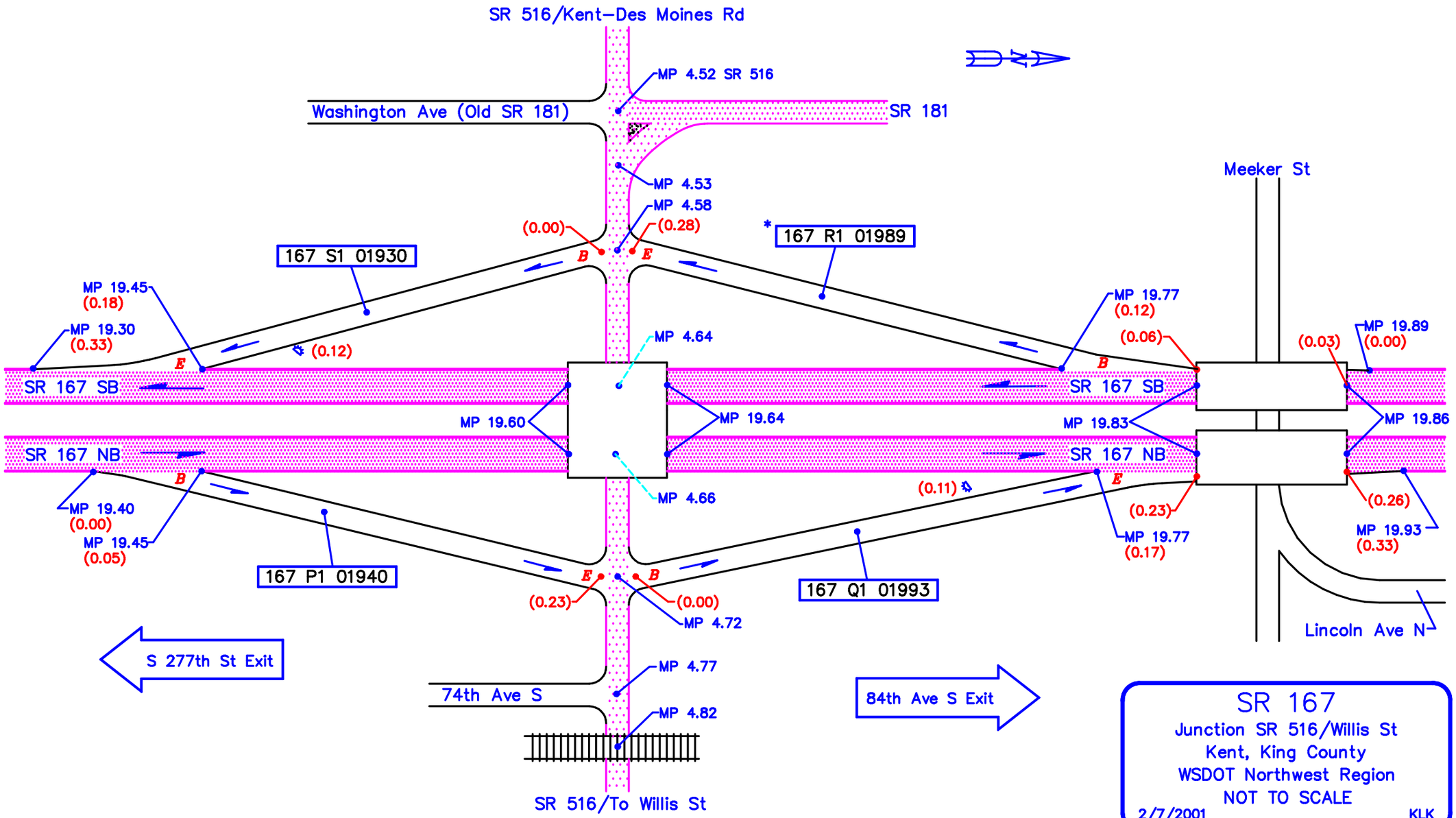

SR 167
Junction SR 516/Willis St
Kent, King County
WSDOT Northwest Region
NOT TO SCALE
2/7/2001 KLK

*Formerly 167 R1 01983, Renamed to 167 R1 01989–Eff. 9/4/98