Copyright © 1999 WSDOT TDO
Interchange Viewer: SR 014 - Junction 192nd Ave
NOT TO SCALE
Not for use for engineering or other purposes requiring dimensional accuracy

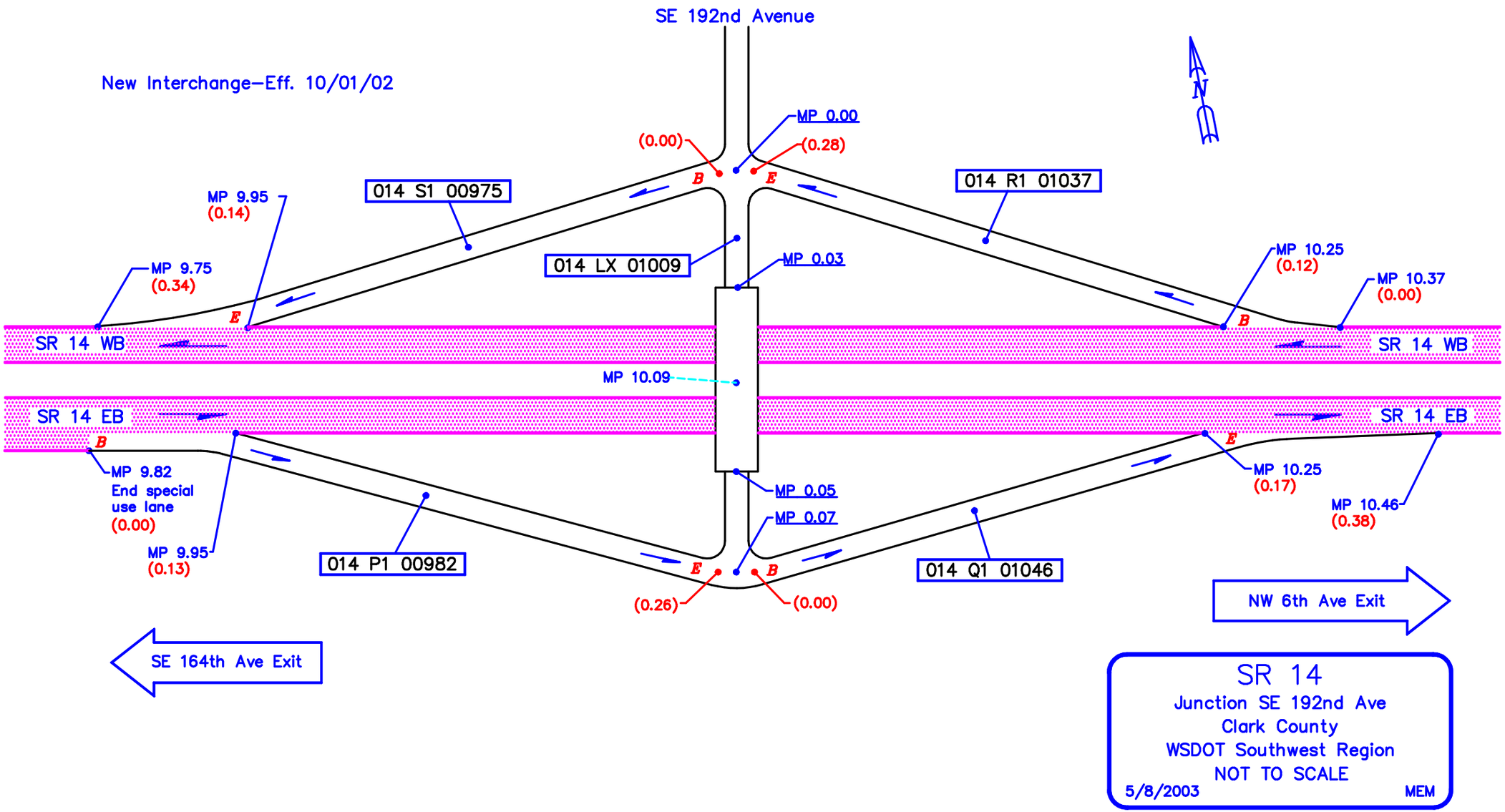

SR 14
Junction SE 192nd Ave
Clark County
WSDOT Southwest Region
NOT TO SCALE
5/8/2003 MEM