840.01 General
840.02 References
840.03 Definitions
840.04 Required Illumination
840.05 Additional Illumination
840.06 Design Criteria
840.07 Documentation

840.01 General

Illumination is provided along highways, in parking lots, and at other facilities to enhance visual perception of conditions or features that require additional driver, cyclist, or pedestrian alertness during the hours of darkness.

The design matrices identify the design levels for illumination on all preservation and improvement projects. (See Chapter 325.) These levels, basic or full, are indicated in the columns. At the basic design level for minor safety or preservation work, providing breakaway features on existing light standards (when required), replacing deficient electrical components, and other minor work would be the extent of consideration. Providing additional lighting or relocating light standards on preservation projects may be considered as a spot safety enhancement.

A full design level notation in a design matrix column indicates that the required illumination (see 840.04 Required Illumination) specified in this chapter is necessary. When the illumination column has an EU (evaluate upgrade to full design level), consider providing illumination if it would be beneficial to the specific project.

A deviation to not provide the illumination required for full design level on a National Highway System (NHS) highway requires Olympia Service Center (OSC) approval. Submit the necessary information, justifying the deviation, to the Assistant State Design Engineer. Design deviations on Non-NHS highways are approved by the Regional Administrators or their designees. Proposals to provide less than or more than the required illumination are considered a deviation and require justification and the same approval process.

840.02 References

Revised Code of Washington (RCW) 47.24.020, "Jurisdiction, control."

Washington Administrative Code (WAC) 468-18-040, "Design standards for rearranged county roads, frontage roads, access roads, intersections, ramps and crossings"

Directive D 22-21, "Truck Weigh Stations and Vehicle Inspection Facilities on State Highways"

Roadway Lighting Handbook, USDOT, Washington, DC 1978

Roadway Lighting Handbook Addendum to Chapter Six, USDOT, Washington, DC 1983

An Informational Guide for Roadway Lighting, AASHTO, Washington, DC 1984

American National Standard Practice for Roadway Lighting, IES RP-8-1983, New York, NY 1983

Recommended Practice for Tunnel Lighting, IESNA RP-22-96, New York, NY 1996

National Electrical Code, NFPA, Quincy, MA

City Streets as a Part of the State Highway - Final Report, WSDOT 1997

840.03 Definitions

candela A unit of luminous intensity equal to one lumen per steridian.

lamp lumens The total light output from a lamp in lumens. (A lumen being a unit of luminous flux.)

luminous flux The time rate of flow of light.

lux The illumination of a surface one square meter in area on which there is uniformly distributed a flux of one lumen, or the illuminance

produced on a surface, all points of which are at a distance of one meter from a uniform point source, of one candela.

minimum light level The minimum light intensity of illumination at any point within the design area measured just prior to relamping the system.

minimum average light level The average of all light intensities within the design area measured just prior to relamping the system.

mounting height The vertical distance between the surface of the design area and the center of the light source of the luminaire. This is the distance used to compute the light level of the design area.

pole height (H1) The vertical distance from the light source to the pole base. This distance is specified in contracts and used by the pole manufacturers to fabricate the light standard. In curb and sidewalk areas, the H1 distance is assumed to equal the mounting height. Typically, the mounting height in fill sections is less than the H1 distance while the mounting height in cut sections is equal to or greater than the H1 distance.

security lighting A minimal amount of lighting used to illuminate areas for public safety or theft reduction. Security lighting for walkways is the lighting of angle points and shadow areas.

spacing The distance in meters measured on center line between adjacent luminaires. Spacing is equal to the lamp lumens times the coefficient of utilization times the light loss factor divided by the width and the design lux value.

uniformity ratio The ratio of the minimum average light level on the design area to the minimum light level of the same area.

veiling luminance The stray light produced within the eye by the light source that alters the apparent brightness of an object within the visual field and the background against which it is viewed.

840.04 Required Illumination

(1) General

The Washington State Department of Transportation (WSDOT) is responsible for illumination on state highways with partial, modified, or full limited access control regardless of the location and on state highways located outside the corporate limits of cities. Cities are responsible for illumination of state highways without WSDOT established access control located within their corporate limits. Figures 840-1 through 840-5 show examples of illumination for highway applications. Illumination in these examples and the locations listed below are required on state highways.

(2) Freeway Off Ramps and On Ramps

Provide the necessary number of light standards to illuminate the design area of all freeway off ramp gore areas and on ramp acceleration tapers. See 840.06(2).

(3) Freeway Ramp Terminals

A single light standard is required at the intersection of a ramp terminal with a two lane roadway. At the intersection of a ramp terminal with a multilane roadway, additional lighting is required to illuminate the intersection design area. See Figure 840-5. Additional illumination is also required if the intersection has left turn channelization or a traffic signal.

(4) Intersections With Left Turn Channelization

Illumination of the intersection area and the left turn storage is required for intersections with painted or other low profile pavement markings such as raised pavement markings. When the channelization is delineated with curbs, raised medians or islands, illuminate the raised channelization from the beginning of the left turn taper. Illumination of the secondary road intersecting the state highway can be beneficial to the motoring public. Funding and design, however, are the local agency's responsibility. Contact that agency to see if they are interested in participating.

(5) Intersections With Traffic Signals

All traffic signals on state highways are illuminated. The extent of illumination is the same as for intersections with left turn channelization. Illumination of the crossroad is beneficial and participation of the local agency is desirable. In cities with a population under 22,500, the state may assume responsibility for illumination installed on signal standards.

(6) Railroad Crossings With Gates or Signals

Railroad crossings with automated gates or signals on state highways are illuminated if there is nighttime train traffic. Within the corporate limits of a city, illumination is the responsibility of that agency.

(7) Transit Flyer Stops

Illuminate the loading area of a transit flyer stop located within the limited access boundaries. Normally, this illumination consists of one light standard at the point where passengers enter the bus.

(8) Major Parking Lots

All parking lots with usage exceeding 50 vehicles during the nighttime peak hour are considered major parking lots. Provide an illumination design that will produce the light levels shown in Figure 840-6 for the parking area and bus loading zone. During periods of low usage at night, only security lighting is required. Provide an electrical circuitry design that allows the illumination system to be reduced to approximately 25% of the required light level.

(9) Minor Parking Lots

Minor parking lots have a nighttime peak hour usage of 50 or less vehicles. Provide security level lighting for those lots owned and maintained by the state. Security lighting consists of lighting the entrance and exit to the lot.

(10) Truck Weigh Sites

Provide illumination of the scale platforms, parking areas, and inspection areas of weigh sites.

(11) Midblock Pedestrian Crossings

Illuminate the entire midblock pedestrian crossing, including the crosswalks, the refuge area in the roadway, and the sidewalks or shoulders adjacent to the crosswalk. When a raised median pedestrian refuge design is used, illuminate this raised channelization.

(12) Long Tunnels

Long tunnels have a portal to portal length greater than the wet pavement stopping sight distance. Provide both nighttime and daytime illumination for long tunnels.

840.05 Additional Illumination

(1) General

At certain locations, additional illumination is desirable to provide better definition of nighttime driving conditions or to provide consistency with local agency goals and enhancement projects. Funding, design, and maintenance of illumination along state highways within the corporate limits of a city is the responsibility of the municipality unless the state has acquired modified, partial, or full limited access control. Contact the local agencies to determine if they desire to participate in the installation of illumination for roadways under their jurisdiction as a part of the project. For improvement projects, consider additional illumination on state highways where there is a diminished level of service or an accident frequency during the hours of darkness.

Diminished Level of Service is a mobility condition where the nighttime peak hour level of service is D or lower. When volumes are used to determine the level of service, use traffic counts taken during the evening peak hour. Peaking characteristics in urban areas are related to the time of day. Traffic counts taken in the summer between 4:30 p.m. and 7:30 a.m. may be used as nighttime volumes if adjustment factors for differences in seasonal traffic volumes are applied for November, December, and January.

Accident Frequency condition is when the number of nighttime accidents equals or exceeds the number of daytime accidents. An engineering study that indicates that illumination will result in

a reduction in nighttime accidents is required to demonstrate justification. Consider the seasonal variations in lighting conditions when reviewing reported accidents. Accident reporting forms, using a specific time period to distinguish between “day” and “night,” might not indicate the actual lighting conditions at the time of an accident. Consider the time of year when determining if an accident occurred at nighttime. An accident occurring at 5:00 p.m. in July would be a daytime accident, but an accident occurring at the same time in December would be during the hours of darkness.

The mitigation of high nighttime, pedestrian accident locations requires different lighting strategies than vehicular accident locations. Provide light levels to emphasize crosswalks and adjacent sidewalks. Multiple lane highways with two way left turn lanes, in urban build up areas, are typically high speed facilities with numerous road approaches. These roadways allow numerous vehicle entry and exit points and provide few crossing opportunities for pedestrians. Additional illumination may be justified for this condition.

(2) Highways With Full Limited Access Control

On the main line, consider full illumination if a diminished level of service exists and any two of the following conditions are satisfied:

- There are three or more successive interchanges with an average spacing of 2.4 km or less.
- The segment is in an urban area.
- The accident frequency condition exists.

At ramps, consider additional illumination when a diminished level of service exists and any of the following conditions are present:

- The ramp alignment and grade are complex.
- There are routine queues of five or more vehicles per lane at the ramp terminal due to traffic control features.
- The nighttime accident frequency condition exists.

At crossroads, consider additional illumination when a diminished level of service exists and the nighttime accident frequency exists. Also, consider additional illumination for tunnels, undercrossings, or lids on the crossroad.

(3) Highways With Partial or Modified Limited Access Control or With Managed Access Control

Consider additional illumination if this segment of highway is in a commercial area and either a diminished level of service exists or the nighttime accident frequency exists and an engineering study indicates that nighttime driving conditions will be improved.

(4) Intersections Without Channelization

Illumination of intersections without channelization is justified in urban areas and other locations if a nighttime accident frequency requirement is satisfied or the traffic volumes and movements would be improved with the installation of left turn channelization.

(5) Tunnels, Underpasses, or Lids

Illumination is justified if portal conditions result in a brightness in the tunnel that is less than the measured daytime brightness of the approach roadway divided by 15 and the length to vertical clearance ratio is 10:1 or greater.

(6) Construction Zones and Detours

Illumination may be justified if construction activities take place on the roadway at night. Illumination may also be justified for detours where the alignment and grade are unusual and require additional driver, cyclist, or pedestrian alertness.

(7) Transit Stops

Transit stops with shelters are indicative of higher passenger usage and illumination is justified. This lighting consists of a single light standard positioned to illuminate both the transit pull-out area and the loading area. Additional illumination to highlight the loading area at transit stops with

significant, nighttime usage may be considered, if the transit company will provide the necessary funding for construction and maintenance.

(8) Bridges

Justification for illuminating bridges is the same as that for highways with or without full limited access control, as applicable.

(9) Railroad Crossing Without Gates or Signals

Illumination of these facilities is justified if there is a potential for nighttime accidents. Consider the extent of nighttime train activity in making this determination. Also, consider illumination if there is a probability that railroad cars will be stopped on the crossing during the nighttime.

(10) Walkways and Bicycle Trails

Illumination of pedestrian walkways is justified if the walkway is a connection between two highway facilities. This might be between parking areas and rest room buildings at rest areas, between drop-off or pick-up points and bus loading areas at flyer stops, or between parking areas and bus loading areas or ferry loading zones, for example. Consider illuminating existing walkways and bicycle trails if security problems have been reported. Also, consider illumination if security problems are anticipated. In these conditions the walkways and bicycle trails are illuminated to security levels. Illumination to the level shown in Figure 840-6 is allowed only when approved by the Regional Administrator.

(11) Rest Areas

Provide illumination at the roadway diverge and merge sections within rest areas and the parking areas as for a major parking lot.

840.06 Design Criteria

(1) Light Levels

Light levels vary with the class of highway, development of the adjacent area, and the level of nighttime activity. Light level requirements for highways and other facilities are shown in Figure 840-6. These levels are the minimum average light levels required for a design area at the end of rated lamp life for applications requiring a spacing calculation. Light level requirements are not applicable for single light standard or security lighting installations. See Chapters 430 and 440 for design classes of highways.

The types of activity areas, shown below, are related to the number of pedestrian crossings. These crossings need not occur within a single crosswalk and can be at several locations along the roadway in an area with pedestrian generators. Land use and activity classifications are as follows:

- **High Activity.** Areas with over 100 pedestrian crossings during the nighttime peak pedestrian hour usage. Examples are: downtown retail areas, near stage theaters, concert halls, stadiums, and transit terminals; and parking areas adjacent to these facilities.
- **Medium Activity.** Areas with pedestrian crossings that number between 11 and 100 during the nighttime peak pedestrian hour usage. Examples are: downtown office areas, blocks with libraries, movie theaters, apartments, neighborhood shopping, industrial buildings, and older city areas; and streets with transit lines.
- **Low Activity.** Areas with pedestrian crossings that number less than 11 during the nighttime peak pedestrian hour usage. Examples are suburban single family areas, low density residential developments, and rural or semirural areas.

(2) Design Areas

The design area is that portion of the roadway, parking lot, or other facility that is subject to the minimum light level, minimum average light level, and uniformity ratio design requirements. This encompasses the area between the edges of the traveled way along the roadway; the outer edges of the stopping points at intersections; and, when present, a bike lane adjacent to the traveled way. When the roadway has adjacent sidewalks with high or medium activity classifications, the design area includes these features.

Design area requirements for various applications are shown in Figures 840-1 through 840-5 and the following:

- One lane off-ramp. Two main line through lanes and the ramp lane, including gore area, from the gore point to a point 60 m (minimum) down stream of the gore point. A 30 m longitudinal tolerance either way from the gore point is allowed.
- Two lane off-ramp. Two main line through lanes and both ramp lanes, including gore area, from a point 60 m upstream of the gore point to a point 60 m downstream from the gore point. A 30 m longitudinal tolerance either way from the gore point is allowed.
- One lane on-ramp. Two main line through lanes and the ramp lane, from a point where the ramp lane is 3 m wide to a point 60 m upstream. A 30 m longitudinal tolerance either way is allowed.
- Two lane on-ramp. Two main line through lanes and the ramp lanes from a point where the ramp lanes are 6.7 m wide to a point 60 m upstream. A 30 m longitudinal tolerance either way is allowed.
- Intersections channelized with pavement markings. The design area has two components, the intersection area and the approach areas. The intersection area is the area between the stopping points on both the main road and the minor road, including marked or unmarked crosswalks. The approach areas are the areas on the main roadway between the stopping point and where the left turn lane is full width.
- Intersections with raised channelization. The design area has two components, the intersection area and the approach areas. The intersection area is the area between the stopping points on both the main road and the minor road, including marked or unmarked crosswalks. The approach areas are the areas on the main roadway between the stopping point and where the left turn taper begins.
- Unchannelized intersection. The area between the stopping points on both the main road and the minor road, including marked or unmarked crosswalks.
- Railroad crossings. The roadway width from a point 15 m either side of the track (the approach side only for one way roadways).
- Transit loading areas. The lane width and length designated for loading.
- Major parking lots. The entire area designated for parking including internal access lanes.
- Scale Platforms at weigh sites. The approach width from the beginning of the scale platform to the end of the platform.
- Inspection areas at weigh sites. The area dedicated to inspection as agreed upon with the Washington State Patrol.

(3) Light Levels for Tunnels and Underpasses

Short tunnels and underpasses, with a length to vertical clearance ratio of 10:1 or less, normally do not have daytime illumination. Short tunnels with length to vertical clearance ratios greater than 10:1 are treated the same as an entrance zone on a long tunnel to establish daytime light levels. Nighttime light level requirements for short tunnels on continuously illuminated roadways are the same as the light level required on the roadway outside the tunnel.

Long tunnels are divided into zones for the determination of daytime light levels. Each zone is equal in length to the wet pavement stopping sight distance. The entrance zone beginning point is a point outside the portal where the motorist's view is confined to the predominance of the darkened tunnel structure.

The daytime entrance zone light level is dependent upon the brightness of the features within the motorist's view on the portal approach. The brightness level is defined as the average brightness measured over a 20 degree cone at a point 150 m in advance of the portal. The entrance zone light level produced within the tunnel must

be sufficient to provide a brightness level of approximately 5% of the measured portal brightness, after adjustment for the reflectivity of the roadway, walls, and ceiling. Design successive zones for a daytime light level of 5% of the previous zone light level to a minimum value of 50 lux. Requirements for nighttime light levels for long tunnels on continuously illuminated roadways are the same as the light level required on a roadway outside the tunnel. Provide adequate illumination of fire protection equipment, alarm pull boxes, phones, and emergency exits in long tunnels to minimize the risk associated with catastrophic accidents.

(4) Light Standards

(a) **Light Standards.** Light standards are the most common supports used to provide illumination for highway facilities. The 12.2 m and 15.2 m high light standards with breakaway bases and Type 1 mast arms are used predominately on state highways. The angular Type 2 mast arms are allowed only to match existing systems. Use Type 1 mast arms on all new systems. Cities and counties may elect to use different mounting heights to address factors unique to their environments. On state highways, alternate light standards may be use if requested by the city or county, provided they agree to pay any additional costs associated with this change.

The typical location for a light standard is on the right shoulder. When considering designs that propose light standards mounted on concrete barrier in the median, consider the total life cycle cost of the system, including the user costs resulting from lane closures required for relamping and repair operations. Light standards located in the vicinity of overhead power lines require a 3 m clearance from the power line to any portion of the light standard or luminaire. Consult the Bridge and Structures Office when mounting lights on structures such as retaining walls and bridge railings.

It is preferable to locate a light standard as far from the traveled way as possible to reduce the potential of impacts from errant vehicles. The length of the mast arm can vary from 1.8 m to 4.9 m to allow for this placement. The preferred position for the luminaire is over the edge line. However, some flexibility is acceptable with the luminaire position to allow for placement of the light standard. When necessary, the luminaire can be positioned up to 1.2 m outside of the edge line. See Figure 840-7.

When light standards are located within the Design Clear Zone, breakaway features are used to reduce the severity of a potential impact. To allow these breakaway features to function as intended, it is preferred that they be installed on slopes that are 1V:6H or flatter (cut or fill slope). On fill slopes where flattening of the slope to achieve a 1V:6H slope is not practical, consider locating the light standard at least 3.6 m beyond the slope break. If this is not possible, locate the light standard at the slope break. Do not place the light standard on a fill slope that is 1V:3H or steeper unless it is behind a traffic barrier.

When placing the light standard on a cut slope, that is 1V:3H or flatter (such as the backslope of a ditch), the preferred location is outside of the Design Clear Zone. If this is not practical, the light standard may be installed with a modified foundation that matches the slope's surface. In this case, it is critical that the light standard be positioned at least 1.2 m beyond the bottom of the ditch. Locate light standards on slopes steeper than 1V:3H outside of the Design Clear Zone. Even when located beyond the Design Clear Zone, it is desirable to use a breakaway base if there is a possibility it could be struck by an errant vehicle.

In curb and sidewalk sections, locate the light standard behind the sidewalk.

Breakaway bases on light standards are a safety requirement for higher speed roadways. They are not always desirable at other locations. Locations where fixed bases are installed are:

- Parking lots.
- Medians where the light standard is mounted on median barrier.
- Behind traffic barrier, beyond the barrier's deflection design value (See Chapter 710).

- Along highways with posted speeds of 35 mph or less where there is medium or high pedestrian activity.
- Pedestrian walkways, bike paths, and shared use paths.

(b) **Light Standard Heights.** Non-standard pole heights require longer fabrication time and are not recommended. Use standard pole heights of 12.2 m and 15.2 m for roadway illumination. Standard pole heights will result in variable mounting heights for the luminaires. Use the actual mounting height at each location when calculating light standard spacing. High mast light supports may be considered for complex interchanges where continuous lighting is justified. Initial construction costs, long term maintenance, clear zone mitigation, spill-over light on to adjacent properties, and negative visual impacts are important factors when considering high mast illumination. Shorter light standards of 9.2 m or less may be used for minor parking lots, trails, pedestrian walkways, and locations with restricted vertical clearance.

(c) **Standard Luminaire.** The cobra head style, high pressure sodium vapor luminaire with Type III, cut-off light distribution is the standard light source used for state highway lighting. A Type III distribution has an oval pattern, and a Type V distribution has a circular pattern. Post top mounted luminaires and other decorative light fixtures with Type V patterns are more effective for area lighting in parking lots and other locations where more symmetrical light distribution patterns are preferred. Recommended mounting heights and initial lumens for various luminaire wattages are shown in Figure 840-8.

(5) Electrical Design

(a) **Circuit Layout.** Circuit layout is usually determined by line loss, control requirements, and maintenance considerations. Illumination systems normally operate on either 240 or 480 volts, single phase. Standard service cabinet installations provide two lighting circuits for Type B Services and five circuits for Type D or E Services. Although the electrical load can usually be carried with one or two circuits, consider using multiple circuits for the lighting system. Multiple circuits are easier to install, maintain, and allow quicker location of circuitry failures. Consider providing separate circuits for each approach at intersections and at each ramp and the crossroad at interchanges. At major parking lots, consider providing at least two circuits for full illumination and another for security level lighting. Providing separate circuits for the inspection area, scales, and parking area at weigh sites allows more flexibility in controlling light levels.

(b) **Circuit Isolation.** Power feed conductors, from the power source to the service, are isolated from other circuits by using a separate conduit. Junction boxes in this conduit run are not allowed. Provide separate conduits for illumination circuits to isolate them from communication and traffic signal circuits on new construction. Illumination circuits may share a junction box with other circuits, including traffic signal detection and display circuits, provided that all circuits in the junction box are energized from the same service. When modifying an existing traffic signal, the installation of separate illumination conduits might be impracticable. In these situations, the illumination circuit conductors may be installed in the signal circuit conduit. When considering this, verify that all conductors in the conduit have an insulation rating equal to or exceeding the maximum circuit voltage applied to any conductor within that raceway. Ratings for various types of insulation are contained in the *National Electrical Code*.

(c) **Conductors.** Copper conductors are required for all permanent underground illumination circuits. Aluminum conductors may be used for temporary overhead illumination circuits. The conductor type installed between the utility power source and the service cabinet is specified by the utility company and is normally aluminum. The minimum conductor size for illumination circuits is a #8 AWG (American Wire Gage). Diameters, areas, ampacities, and resistance factors for various conductor sizes are shown in Figure 840-8.

(d) **Line Loss.** Line loss is the voltage drop between the electrical service and the electrical load. In illumination systems of four or five light standards that are located near the electrical service, line loss is not a factor. In more complex systems the voltage drop can be significant. The light standards farthest from the service might fail to energize if this loss is not compensated for by using larger electrical conductors or by splitting the system into two or more circuits. Some voltage drop is allowable. For design purposes, the allowable line loss for illumination circuits is 5% where the system might be expanded in the future. An 8% loss is acceptable when future expansion seems unlikely. A larger line loss of 10% is allowed for temporary illumination circuits on construction projects. Line loss is calculated by using the formula:

Voltage Drop = 2ALR.

Where: A = Current in amps
L = Length of conductors
R = Resistance of the conductor

An example of a line loss calculation is shown in Figures 840-9a and 840-9b.

(e) **Conduit.** The size of a conduit is dependent on the number and size of the conductors it contains. In new construction, size the conductors to occupy 26% of the cross-sectional area of the conduit. When modifying an existing system, the conductors can occupy up to 40% of the conduit's area. The table in Figure 840-8 lists the 26% and 40% cross-sectional fill areas of various conduit sizes. The minimum size conduit for illumination installations is 25 mm diameter. The minimum size conduit for installation under a roadway is 32 mm diameter.

Conduits are usually placed under existing pavement by jacking, drilling, directional boring, or by boring and casing.

- In jacking, the conduit is pushed under a roadway mechanically, usually with a hydraulic jack. A pointed tip is fitted to the leading end of the conduit to allow easier movement through the soil. Jacking is most effective when the underlying soil is free of rocks.
- In drilling, a small hole is first drilled under the roadway with an auger. Then either the conduit is attached to the auger and pulled back through the hole or the auger is retracted and the conduit is pushed through the hole.
- In directional boring, conduit is installed under the roadway using a surface launched steer-able high pressure fluid jet drilling tool. The drilling fluid maintains the stability of the tunnel, reduces drag on the conduit and provides backfill between the conduit and tunnel. A guidance system is used to measure the depth, lateral position and roll of the tool head while creating the pilot hole. Once the pilot hole is established, a reamer, a swivel and the conduit are attached to the end of the boring tool and the conduit is then pulled back into the tunnel. Multiple conduits may be pulled back into the pilot hole at the same time. Directional boring is used when: there are known objects under the roadway such as, fiber optical cable, sewer line, utility power cable, that must be avoided; the crossing distance is 9 m or greater; and open cut trenching is not allowed.
- In boring and casing, a combination of drilling and jacking is used. An auger located in the leading end of a large diameter steel casing drills through the soil as the casing is being jacked under the roadway. The auger is then removed and conduits are placed in the casing. This type of installation is used when more than three conduits are required.

Open trenching to install conduits is allowed on existing roadways where substantial obstacles under the roadway will be encountered or where there is insufficient room for jacking pits at the edges of the roadway.

(f) **Overcurrent Protection Devices.** These devices are main breakers, branch breakers, and contactors contained within the service cabinet. They protect electrical conductors and components. Breakers are available in different amperage sizes to carry electrical loads. Size the branch breakers to at least 140% of the computed illumination circuit load. The breaker size cannot exceed the ampacity of the smallest conductor it

protects. The #10 pole and bracket cable is protected by fusing and is not a consideration in this sizing requirement. Size the main breakers to exceed 140% of all of the computed illumination loads and 125% of all other loads on the service. The minimum size main breaker is 60 amps.

Lighting contactors are used to switch the lighting circuits on and off. Contactors are used because the control equipment (photocell) operates on 120 volts and is not rated to carry the 240 or 480 volts of the lighting circuits. Size the lighting contactor to equal or exceed the branch breaker rating for the circuit it switches. Lighting contactors are available in 30, 60, and 100 amp ratings.

(g) **Control Equipment.** Photoelectric control devices and time clocks are used to control illumination circuits. The photoelectric control, with sunset turn-on and sunrise turn-off, is used for continuous nighttime operation. Continuous nighttime operation is used at the following locations:

- All required interchange illumination on highways with full limited access control.
- All additional illumination installed on highways with full limited access control.
- Illumination at intersections.
- Illumination at railroad crossings.
- Security lighting at bus loading zones at park and ride lots and at flyer stops.
- Security lighting in major parking lots.
- Security lighting for walkways at park and ride lots, flyer stops, ferry terminals, and rest areas.
- Illumination for parking areas and conflict points at rest areas.
- Detour illumination.
- Construction illumination.
- Illumination installed for accident frequency condition treatment on highways with managed access control.
- The single luminaire in the vicinity of the public telephone at weigh sites.

At certain locations, additional illumination is only required for short periods of time at night. The circuits for this illumination are controlled by a time clock or similar device. This device is designed to be overridden by the photoelectric control unit. This type of control is provided for illumination in excess of security levels in major parking lots, weigh sites, and bus loading areas in park and ride lots and flyer stops.

Other locations, such as tunnels with daytime lighting, require special controls. Controls are provided for circuits that energize certain fixtures throughout the day and night. Other controls energize additional fixtures to provide minimum daytime light levels, entrance zone light levels, and any subsequent zone lighting.

(h) **Light Level and Uniformity Calculations.** These calculations are used to determine the spacing of the luminaires to illuminate the design area. There are both manual methods and computer programs that can be used for these calculations. An example of the inputs and outputs of a computerized program are shown in Figures 840-10a through 840-10d.

840.07 Documentation

Preserve the following documents in the project file. See Chapter 330.

- ☐ A list of the facilities where the required illumination is provided.
- ☐ Justification and approval of proposals to install less than or more than the required illumination.
- ☐ Justification and approvals for any proposal to install additional illumination at other highway facilities.
- ☐ Justification for using nonstandard luminaires and light standards on state highways.

P65:DP/DMM

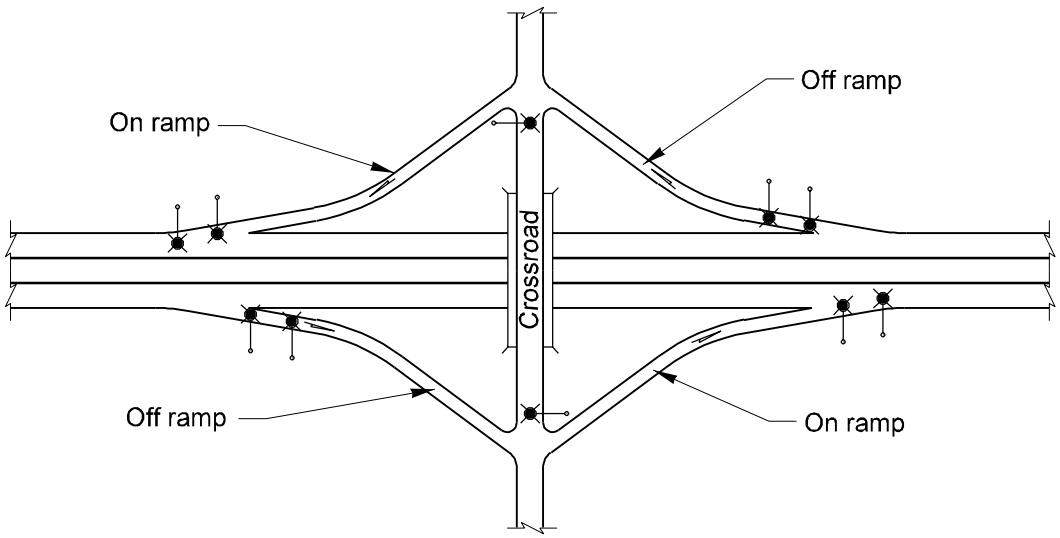

Required Illumination for a Typical Diamond Interchange
(Shown for single lane ramp connection and a two lane crossroad without channelization.)

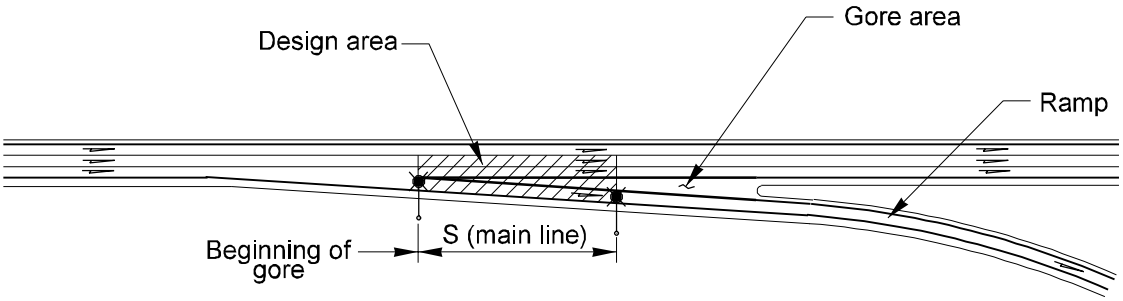

Single Lane Off Connection
(Light standards can be shifted up to 30 m from the beginning of the gore.)

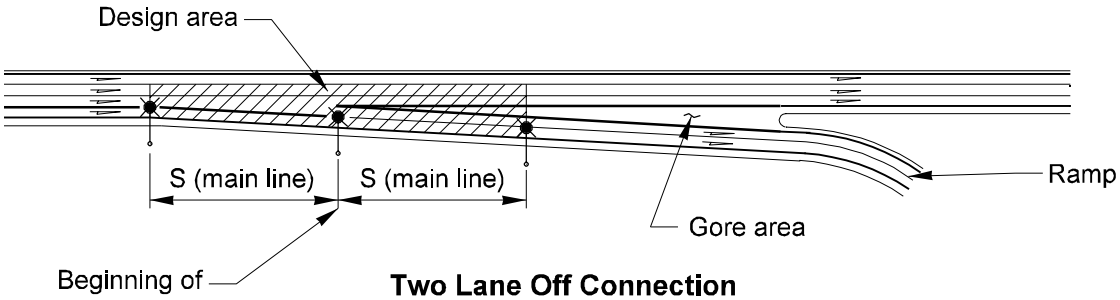

Two Lane Off Connection
(Light standards can be shifted up to 30 m from the beginning of the gore.)

Legend

S Distance between light standards that will result in an average light level that exceeds the requirements of figure 840-6.

Light standards with mast arm mounted luminaire. (Locations are typical and not mandatory.)

Freeway Lighting Applications
Figure 840-1

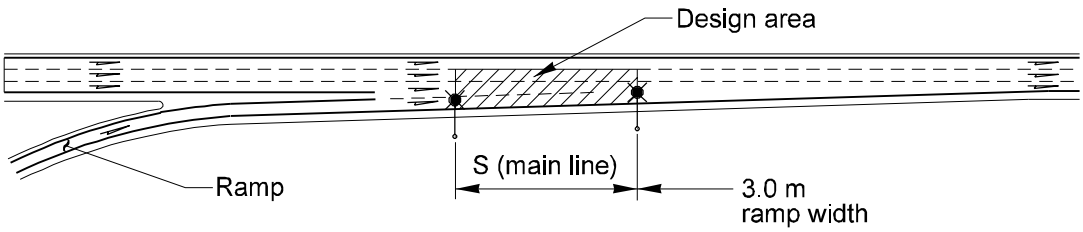

Single Lane On Connection

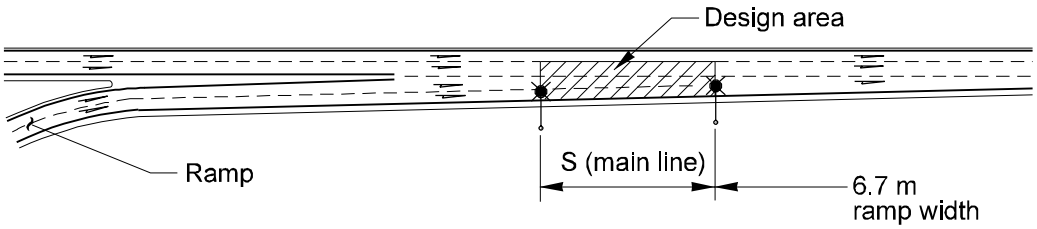

Two Lane On Connection

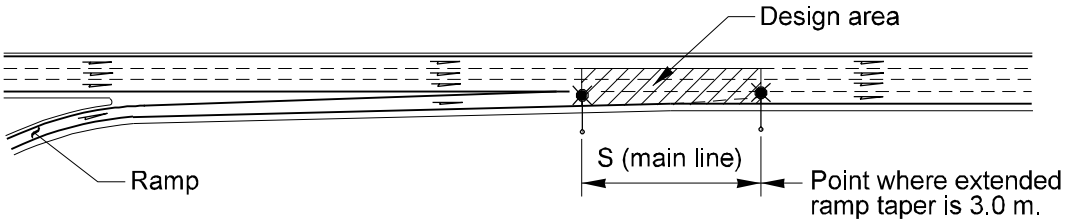

Auxiliary Lane at On Connection
(Required only if significant weaving problem exists.)

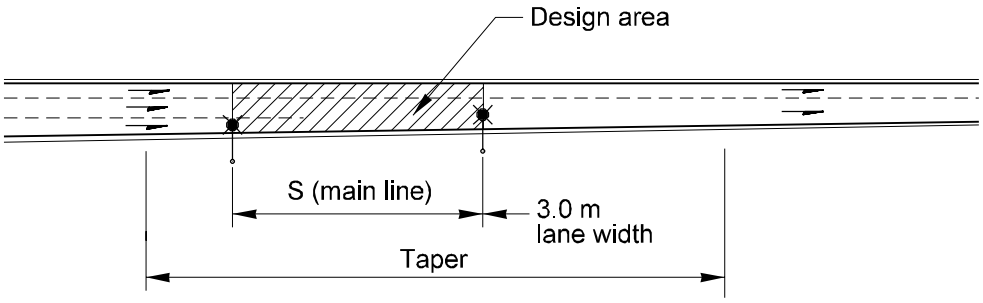

Lane Reduction

Legend

S Distance between light standards that will result in an average light level that exceeds the requirements of figure 840-6.

Light standards with mast arm mounted luminaire. (Locations are typical and not mandatory.)

Freeway Lighting Applications
Figure 840-2

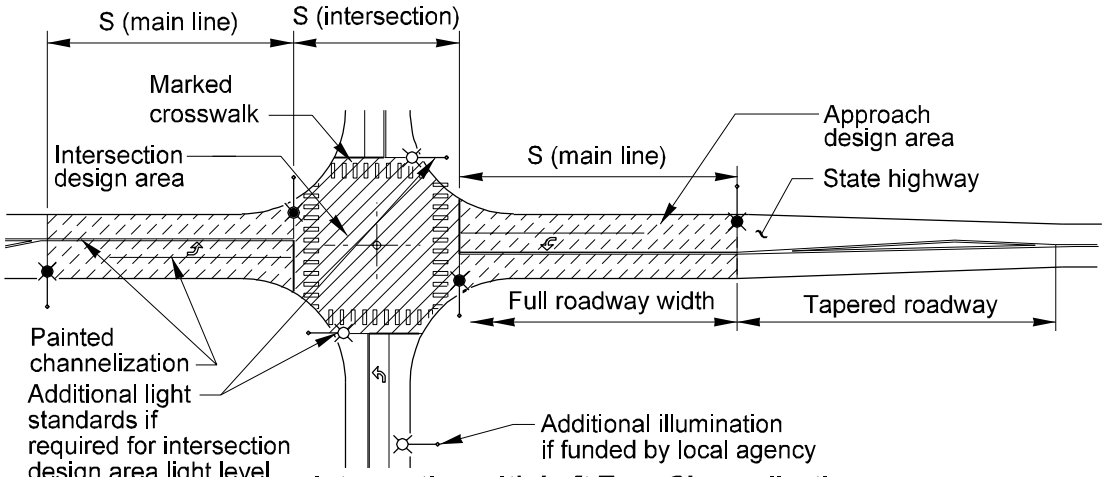

Intersection with Left Turn Channelization

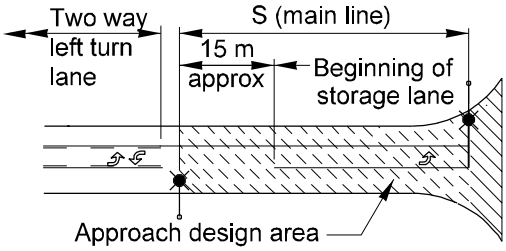

Alternate to Transitions to Two Way Left Turn Lanes

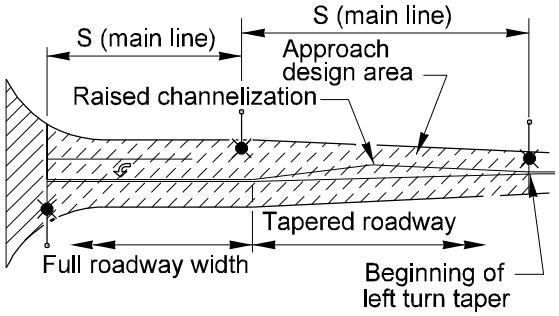

Alternate for Raised Channelization

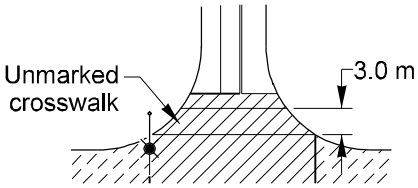

Unmarked Crosswalk Detail

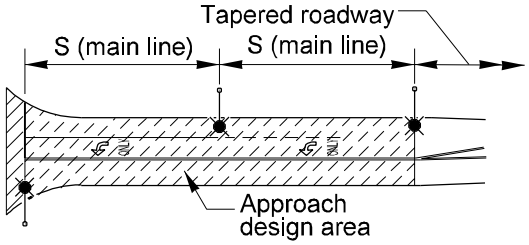

Alternate for Long Storage Lanes

Legend

S Distance between light standards that will result in an average level that exceeds the requirements of Figure 840-6.

Light standard with mast arm mounted luminaire. (Locations are typical and not mandatory.)

Roadway Lighting Applications
Figure 840-3

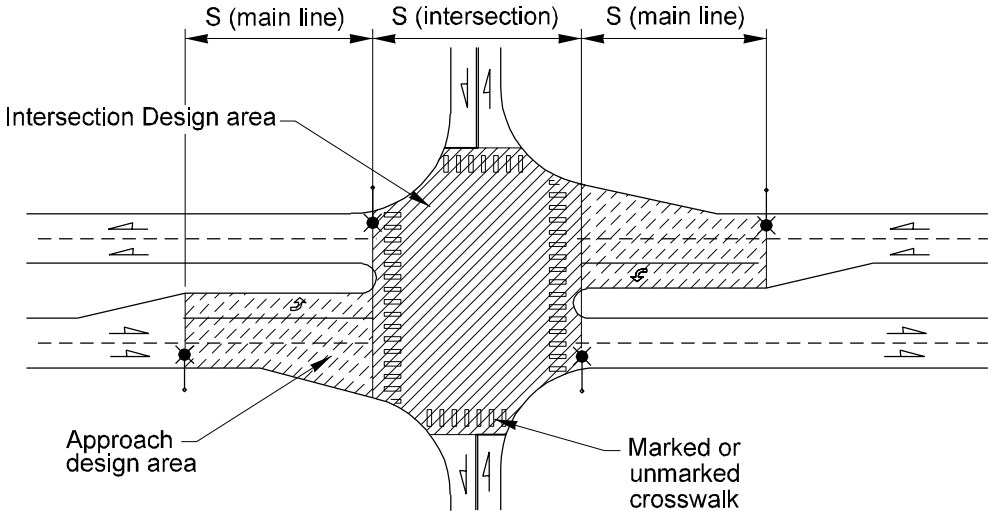

Divided Highway Intersection

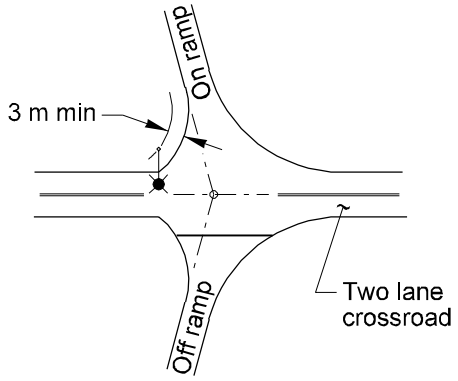

Ramp Terminals

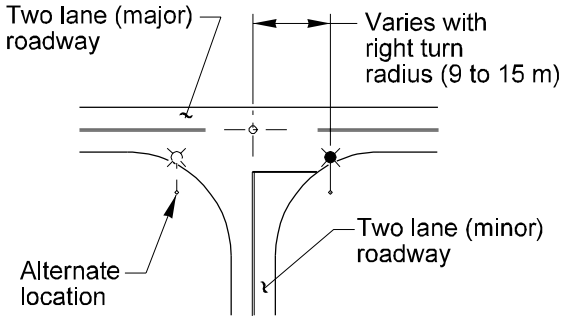

Tee Intersection Minor
(without left turn channelization)

Legend

S Distance between light standards that will result in an average level that exceeds the requirements of Figure 840-6.

Light standard with mast arm mounted luminaire (Locations are typical and not mandatory.)

Roadway Lighting Applications
Figure 840-4

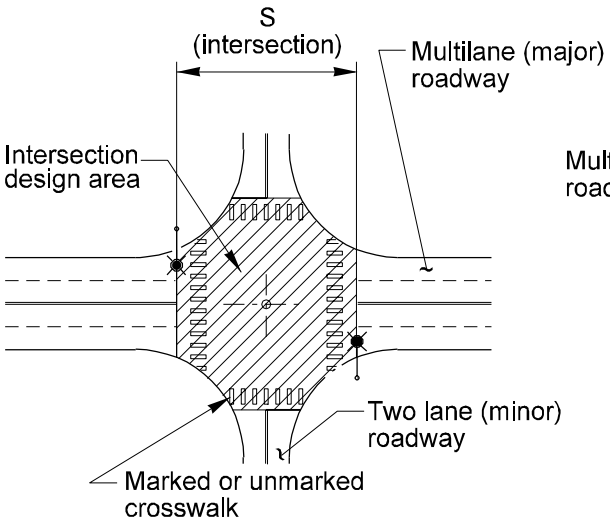

Four Way Intersection
(Without left turn channelization)

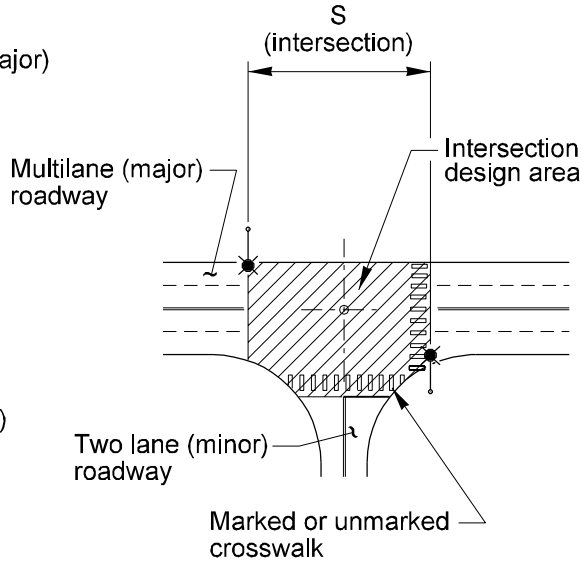

Tee Intersection Major
(Without left turn channelization)

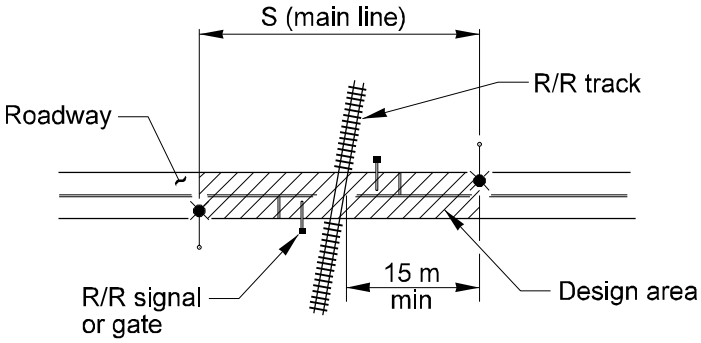

Railroad Crossing

Legend

S Distance between light standards that will result in an average light level that exceeds the requirements of figure 840-6.

Light standard with mast arm mounted luminaire. (Locations are typical and not mandatory.)

Roadway Lighting Applications
Figure 840-5

Light Level and Uniformity Ratio Chart					
Highway Design Class	**Average Maintained Horizontal Light Level**			**Maximum Uniformity Ratio**(1) avg/min	**Maximum Veiling Luminance** Lmax/Lavg
	Pedestrian/Area Classification				
	High (lux)	**Medium** (lux)	**Low** (lux)		
Highways with Full Limited Access Control					
Main Line	6	6	6	4 : 1	0.3 : 1
Ramps	6	6	6	4 : 1	0.3 : 1
Crossroads	6	6	6	3 : 1	0.3 : 1
Ramp Intersections(2)	9	9	9	3 : 1	0.3 : 1
Principal Arterials(3)					
Main Line	17	13	6	3 : 1	0.3 : 1
Intersections	17	13	9	3 : 1	0.3 : 1
Minor Arterials					
Main Line	12	9	6	3 : 1	0.3 : 1
Intersections	9	9	9	3 : 1	0.3 : 1
Collectors					
Main Line	12	9	6	3 : 1	0.3 : 1
Intersections	9	9	9	3 : 1	0.3 : 1
Construction Lanes and Detours	10	10	10	3 : 1	0.3 : 1
Parking Lots	8	8	8	3 : 1	0.3 : 1
Vehicle Inspection Areas	20	20	20	3 : 1	0.3 : 1
Walkways	8	8	8	3 : 1	0.3 : 1
Weigh Scales	8	8	8	3 : 1	0.3 : 1
Bus Loading Zones(4)	20	20	20	NA	0.3 : 1

Notes

(1) The minimum light level is 2 lux for any application with an average light levels of 6lux. The minimum light levels for all other applications are controlled by the uniformity ratio.

(2) Light level and uniformity ratio apply only when installation of more than one light standard is justified.

(3) Light levels shown also apply to modified and partial limited access control.

(4) Provide the light level at the location where the bus stops for riders.

Light Levels and Uniformity Ratios

Figure 840-6

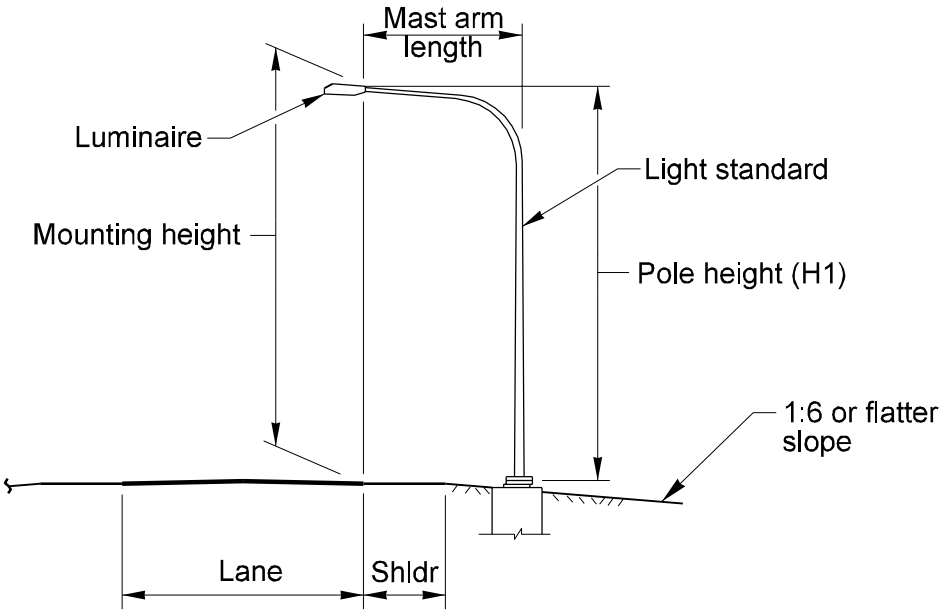

Preferred Location
Embankment slope

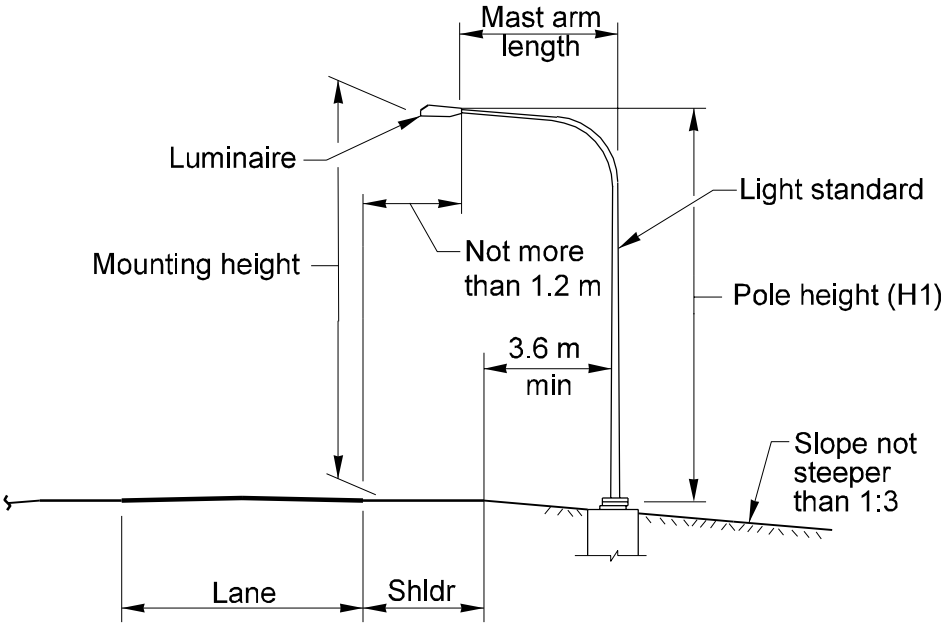

Alternate Location

Light Standard Locations
Figure 840-7

Light Standard Heights				
Luminaire Wattage	Initial Lumens*	H1	Recommended Mounting Height	
			Maximum	Minimum
200	22,000	9.1 m	9.8 m	8.5 m
250	28,000	10.7 m	11.6 m	9.8 m
310	37,000	12.2 m	13.4 m	11.0 m
400	50,000	12.2 m	13.4 m	11.0 m
400	50,000	15.2 m	16.5 m	14.0 m
1,000	140,000	30.5 m	33.5 m	27.4 m

*Note: Lumens are for high pressure sodium vapor luminaires

Conductor Properties Table				
Size (AWG)	Area (mm^2)	Ampacity (Amps)	Resistance Copper (ohms/meter)	Resistance Aluminum (ohms/meter)
# 14	14	15	0.01070	---
# 12	17	20	0.00673	---
# 10	22	30	0.00423	---
# 8	36	50	0.00265	0.00420
# 6	47	65	0.00167	0.00265
# 4	63	85	0.00105	0.00167
# 2	86	115	0.00066	---
# 1	123	130	0.00052	---
# 1/0	143	150	0.00042	---
#2/0	169	175	0.00033	

Illumination Conduit Sizing Table		
Trade Size (NEC)	Maximum Fill (mm^2)	
	26%	40%
27	149	232
35	258	394
41	348	535
53	574	877
63	819	1258
78	1258	1935
91	1677	2580

Light Standard Heights, Conductor, and Conduit Properties
Figure 840-8

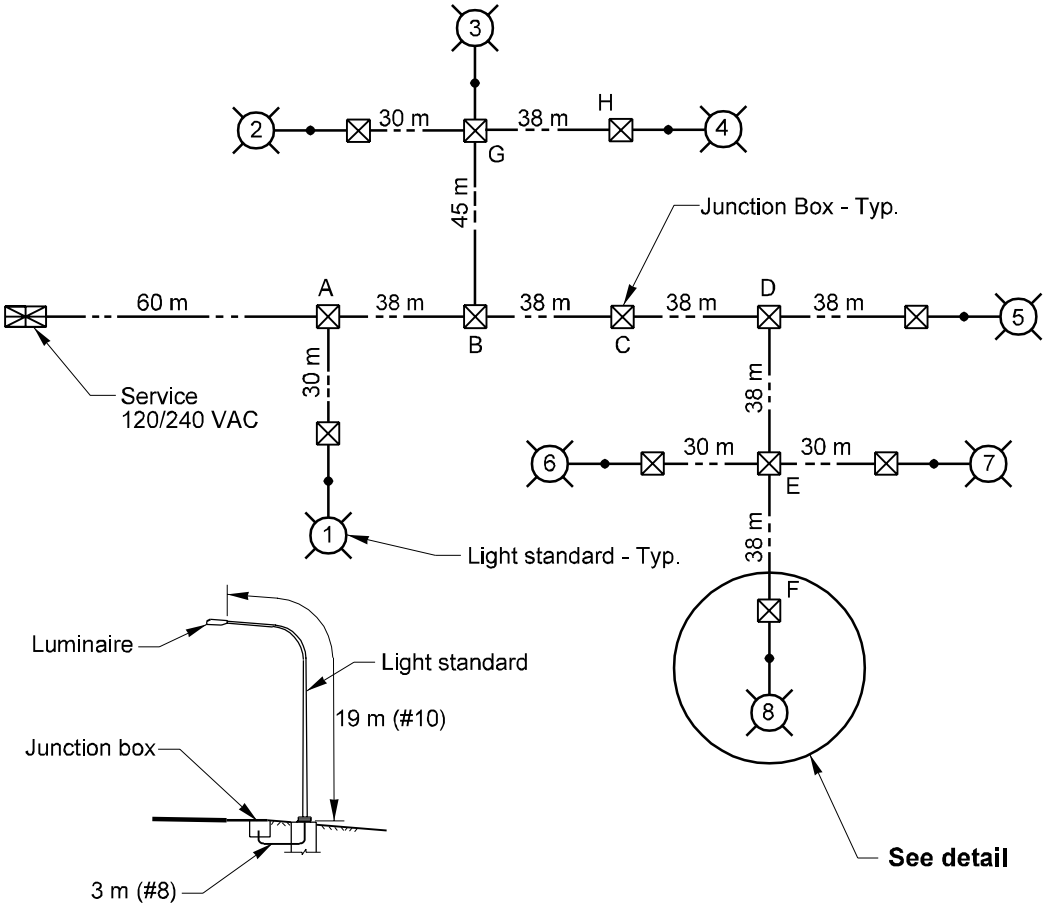

Light standard detail

Given: 400 watt HPS luminaires @ 240 VAC, on 15.24m light standards with 4.88 mast arms and 120/240 VAC service.
Unit load= 400 watts / 240 VAC = 1.67 amps.
Unit load x Load Factor (1.2 for HPS) = 1.67 x 1.2 =2 amps per unit.
Allowable Voltage Drop (5%) = 240 VAC x 5% = 12 volts

SOLUTION

Step 1. Calcuate voltage drop to load furthest from service (Luminaire 8)

Circuit Segment	Conductor Size	Load on Segment	A Sum of Loads	L Length (Meters)	R Resistance	2ALR Voltage Drop	Sum of Volt Drop
Service to A	#8	8 @ 2 amps	16	60	0.00265	5.09	5.09
A to B	#8	7 @ 2 amps	14	38	0.00265	2.82	7.91
B to C	#8	4 @ 2 amps	8	38	0.00265	1.61	9.52
C to D	#8	4 @ 2 amps	8	38	0.00265	1.61	11.13
D to E	#8	3 @ 2 amps	6	38	0.00265	1.21	12.34
E to F	#8	1 @ 2 amps	2	41	0.00265	0.43	12.77
F to 8	#10	1 @ 2 amps	2	19	0.00423	0.32	13.09

13.09 total voltage drop exceeds the allowed value of 12 volts

Line Loss Calculations
Figure 840-9a

Step 2. Change conductor size to # 6 from service to A and recalculate voltage drop

Circuit Segment	Conductor Size	Load on Segment	A Sum of Loads	L Length (Meters)	R Resistance	2ALR Voltage Drop	Sum of Volt Drop
Service to A	# 6	8 @ 2 amps	16	60	0.00167	3.21	3.21
A to B	# 8	7 @ 2 amps	14	38	0.00265	2.82	6.03
B to C	# 8	4 @ 2 amps	8	38	0.00265	1.61	7.64
C to D	# 8	4 @ 2 amps	8	38	0.00265	1.61	9.25
D to E	# 8	3 @ 2 amps	6	38	0.00265	1.21	10.46
E to F	# 8	1 @ 2 amps	2	41	0.00265	0.43	10.89
F to 8	# 10	1 @ 2 amps	2	19	0.00423	0.32	11.21

11.21 total voltage drop is less than the allowable value of 12 volts

Step 3. Calculate voltage drop to Luminaire 4, using conductor sizes from Step 2

Circuit Segment	Conductor Size	Load on Segment	A Sum of Loads	L Length (Meters)	R Resistance	2ALR Voltage Drop	Sum of Volt Drop
Service to A	# 6	8 @ 2 amps	16	60	0.00167	3.21	3.21
A to B	# 8	7 @ 2 amps	14	38	0.00265	2.82	6.03
B to G	# 8	5 @ 2 amps	10	45	0.00265	2.39	8.42
G to H	# 8	1 @ 2 amps	2	41	0.00265	0.43	8.85
H to 4	# 10	1 @ 2 amps	2	19	0.00423	0.32	9.17

9.17 total voltage drop is less than the allowable value of 12 volts

Branch Breaker Size = 140% of load (16 amps) = 22.4 amps. Use 30 amp branch breaker.
Circuit Ampacity = The smallest conductor in the circuit is # 8 with an ampacity of 50 amps.
Contactor Size = 30 amps, minimum size that exceeds the circuit load.

Service Breaker Calculations

Circuit	Load	Factor	A	N	B
Illumination - 240 VAC	16 amps	140%	22.4 amps		22.4 amps
Outlet - 120 VAC	15 amps	125%	18.75 amps		
Heat strip - 120 VAC	1 amp	125%	1.3 amps		
Total sized load			43 amps		22.4 amps

Use 60 amp main breaker (minimum allowed size)

Line Loss Calculations
Figure 840-9b

Problem:
Determine the light standard spacing and offset for the approach and intersection design areas for a channelized collector intersection at a location with a low pedestrian classification using the AGI 32 Lighting Design software.

Given:

Geometric Design:

- Design speed = 50 mph
- Design vehicle = WB-15
- Lane Width = 3.6 m
- Shoulder width = 2.4 m
- Sidewalk width = 1.8 m
- Roadway cross slope = 2%
- Embankment section = 1:3 slopes
- Left turn storage length = 52.5 m
- Right turn radius = 17 m
- Right turn (T) = 6 m
- Right turn (F) = 5.8 m

Illumination Design:

- 15.2 m light standard height (H1)
- 4.9 m mast arm length
- 400 watt HPS luminaire
- Type III medium cutoff, light distribution
- 6 Lux Avg. light level for approaches
- 9 Lux Avg. light level for intersection
- 3:1maxium uniformity ratio for all design areas
- 0.3:1 maximum veiling luminance

Step 1:
Determine the elevation of the top of the light standard slip base. Light standard is 4.9 m from the edge of traveled way. Assume elevation at edge of traveled way is 1.0 m.
Edge of shoulder elevation = 1.0 m - (2.4 x 0.02) = 0.95 m
Slip base elevation = 0.95 m - (2.4 ÷ 3) + 0.1 m = 0.25 m

Step 2:
Determine mounting height for 15.2 m light standard.
Luminaire elevation = 0.25 m + 15.2 m = 15.5 m
Edge of traveled way elevation = 1.0 m
Mounting height = 15.5 m - 1.0 m = 14.5 m

Step 3:
Setup calculation plane.
Note: Always use 2 decimal points.

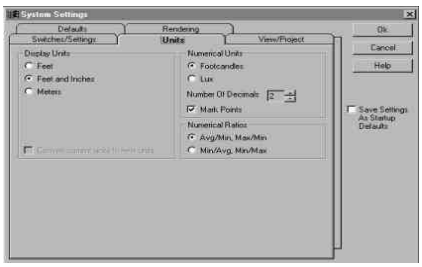

Step 4:
Place the calculation grid so that it adequately covers the outside limits of the desired statistical area.

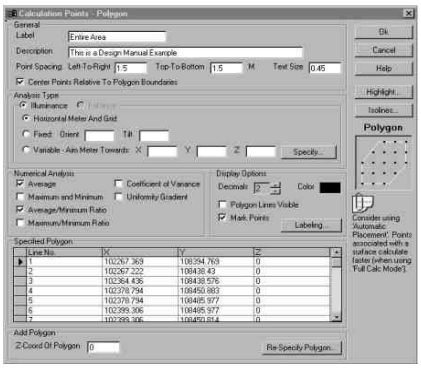

Note: Use a grid point spacing of 1.5 m in both X and Y directions.
Center the calculation grid between the grid boundaries.
The coordinates in the Specified Polygon Section above refer to the grid points at the corners of the calculation grid area. When the CADD drawing is imported, the coordinate locations of all the points and lines are equal to the original CADD file. If desired, the imported CADD drawing can be moved closer to the grid origin of (0,0)

Step 5:
Place Statistical/Calculation Areas.
For the intersection, include all points within the back of shoulder and ahead of the stop bar.
For the approaches, include all points within the outside lane edge of each direction of traffic and the area between the stop bar and the end of full width in the left turn pocket.

Illumination Calculation Example

Figure 840-10a

Step 6:
Define the luminaires and light standard.
Lumens for 400 watt HPS = 50,000
Tilt = 0
Light loss factor = 62%
Use photometrics file GE1002

Note: Arm length equals mast arm length plus the distance to the light source (4.9 m + 0.5 m = 5.4 m)

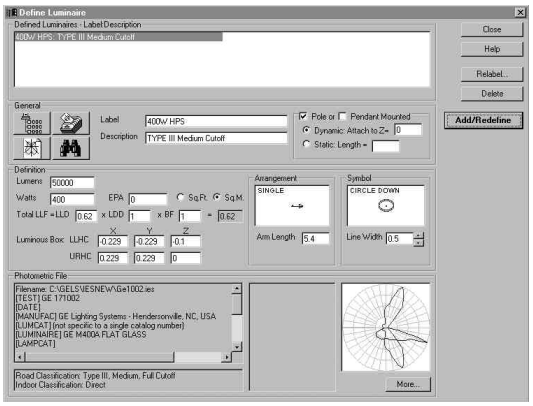

Step 7:
Place the luminaires. ht levels and uniformity values are obtained in their respective areas. This example uses a staggered pattern for light standard placement.

Note: The command line below describes the characteristics of the light standard and the luminaire being placed.

Step 8:
Calculate veiling luminance for the approaches and the intersection.
For these calculations, use the part of the program called the Roadway Optimizer.

Note: This step does not provide accurate outputs for high mast illumination.

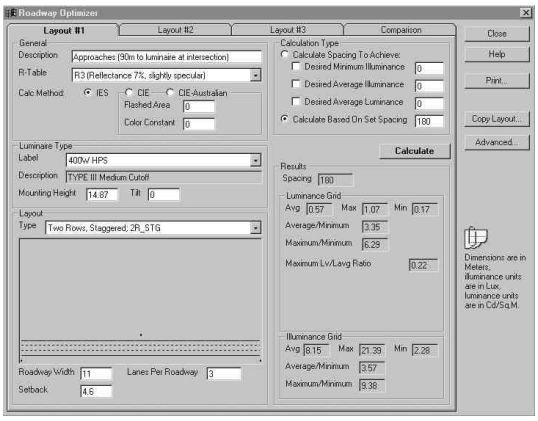

Intersection:
Spacing = 24 m
Roadway width = 11 m
Setback = 10.5 m
Pavement type = R2
Number of lanes = 3
Luminaire mounting height = 15.2 m

Illumination Calculation Example
Figure 840-10b

Step 8 (Continued):

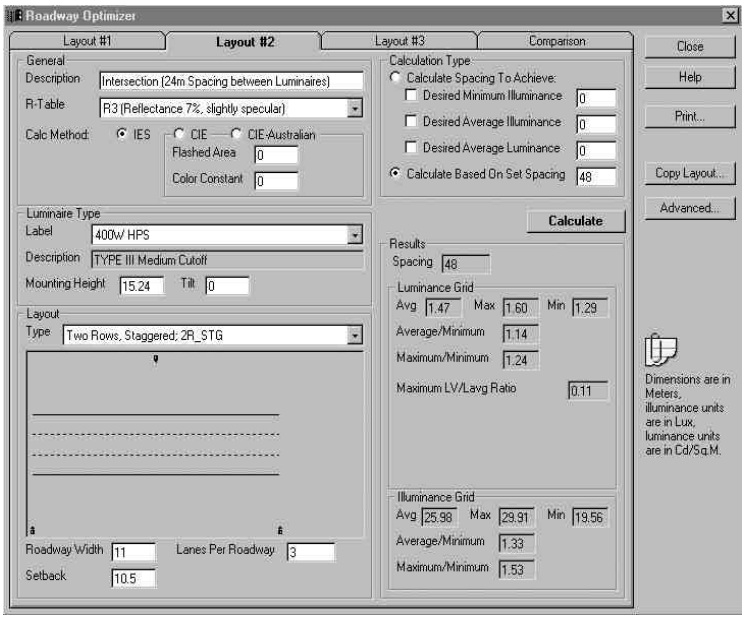

Approaches:
Spacing = 24 m
Roadway width = 11 m
Setback = 10.5 m
Pavement type = R2
Number of lanes = 3
Luminaire mounting height = 15.2 m

Notes: The Roadway Optimizer cannot account for differences in mounting heights between the approach and intersection luminaires. To compensate for this, use an average mounting height. An average mounting height of 14.87 m was used in these examples.
The spacing of the luminaires is the distance shown in the examples. The spacing entered into the program is the distance to the next light standard on the same side of the roadway.

Program Outputs:

Statistical Area	Average lux	Minimum lux	Average\minimum	Veiling luminance
Intersection	16.35	5.66	2.89	0.11
Left Approach	6.4	2.46	2.6	0.22
Right Approach	6.4	2.46	2.6	0.22

Results:
Spacing on approaches = 90 m with approximately 9.9 m offsets from roadway centerline.
Spacing at intersections = 24 m with approximately 16.4 m offset from roadway centerline.

Further explanation:
Uniformity was the controlling factor in this example. By shortening the spacing on the approaches a lower value for uniformity can be obtained. The light standards at the intersection are set back to achieve the desired uniformity.

Illumination Calculation Example
Figure 840-10c

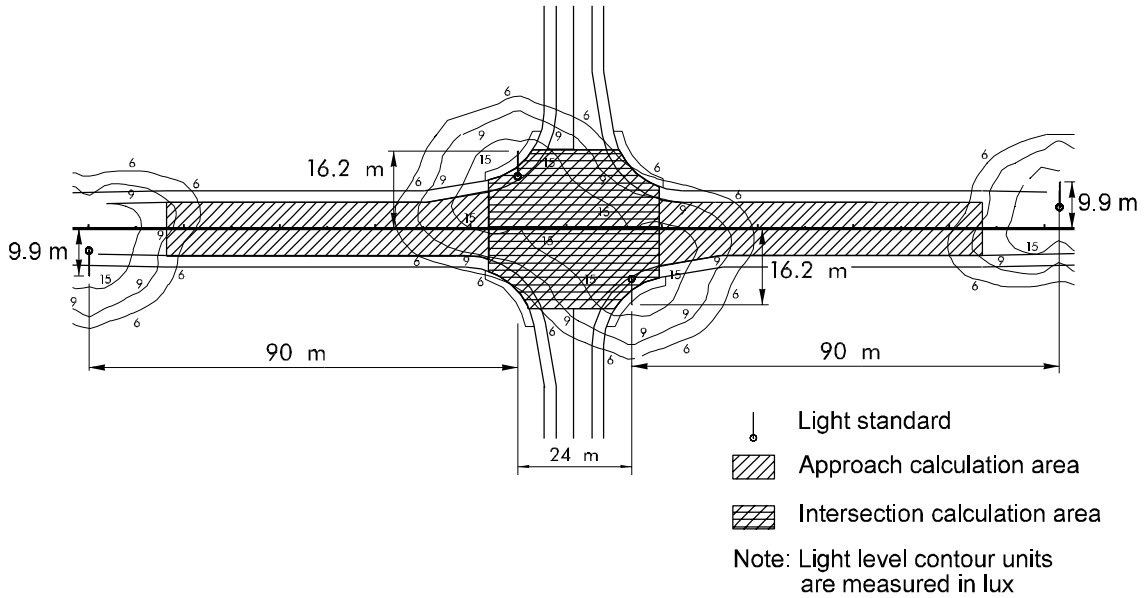

Computer-Generated Plot (Plan View) of Light Levels

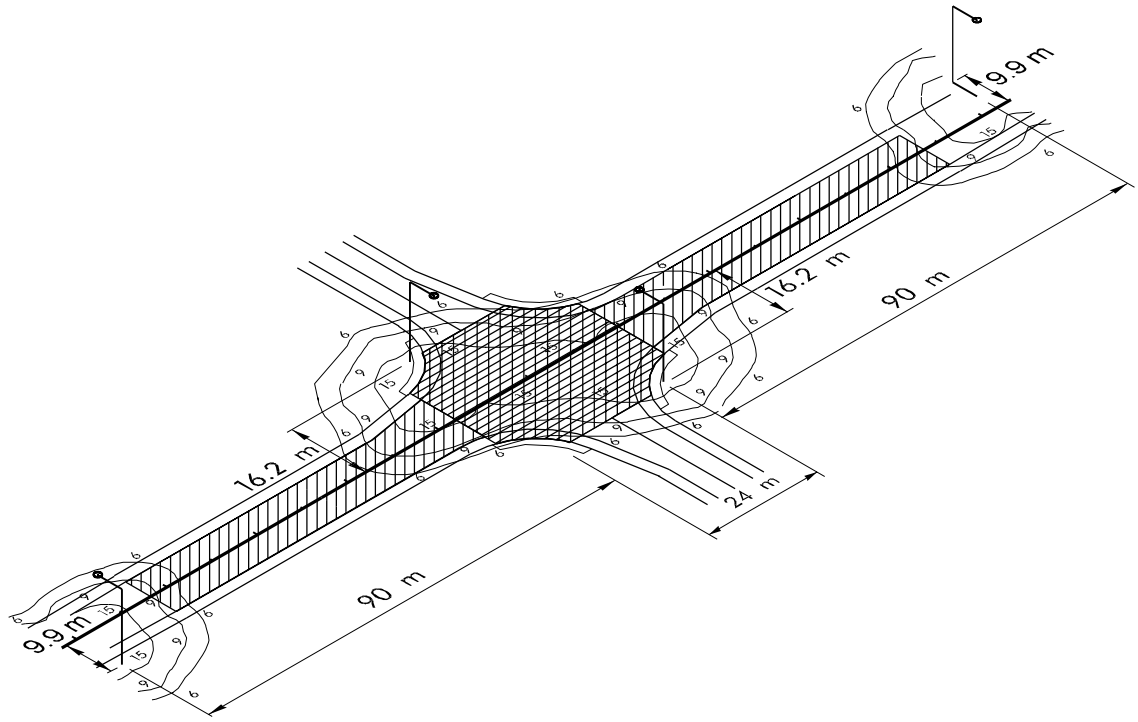

Computer-Generated Plot (3D View) of Light Levels

Illumination Calculation Example
Figure 840-10d