1060
TRANSIT BENEFIT FACILITIES

1060.01 Introduction
1060.02 Definitions
1060.03 Park and Ride Lots
1060.04 Transfer/Transit Centers
1060.05 Bus Stops and Pullouts
1060.06 Passenger Amenities
1060.07 Roadway and Vehicle Design Criteria Characteristics
1060.08 Intersection Radii
1060.09 Disabled Accessibility
1060.10 References

1060.01 INTRODUCTION

(1) Purpose of Chapter

The purpose of this chapter is to provide operational guidance and information for designing transit benefit facilities for WSDOT, local agencies, and developers on public or private property within Washington.

The design criteria presented represent recognized principles based mainly upon criteria developed by AASHTO. The information presented should not substitute for sound engineering judgement. It must be recognized that some situations encountered will be beyond the scope of this section, since it is not a comprehensive textbook on public transportation engineering.

Private development, which incorporates transit benefit facilities into its design, should use this section as a guide at the direction of staff from the appropriate public jurisdiction.

Coordination between agencies in the location and design of transit benefit facilities has often been "catch-as-catch-can" at best. Where transit benefit facilities have been required as a condition of development, there has been some confusion as to what design criteria apply. This chapter, along with the referenced "A Guide to Land Use and Public Transportation," provides guidance for the design and location of transit benefit facilities.

The design information which follows can help WSDOT, local jurisdictions, and developers assure that transit provides efficient and cost effective service to the public and the community.

1060.02 DEFINITIONS

articulated bus a two-section bus that is permanently connected at a joint. An articulated bus is 50 percent longer than a standard bus, has three axles, and can bend around corners.

bus pull-out a dedicated parking area for in-service coaches on specified routes, where coaches do not have independent pull-in and pull-out areas.

bus shelter a facility which provides seating and protection from the weather for passengers waiting for a bus.

bus stop a place where passengers wait to board a bus.

car/vanpool a group of people who share the use and cost of a car or van for transportation, on a regular basis.

feeder service bus service providing connections with other bus or rail services.

high occupancy vehicle (HOV) a vehicle which carries a specified minimum number of persons (Chapter 1050).

kiss and ride when patrons of a park and ride lot are dropped off or picked up by private auto or taxi. These are sometimes called drop and ride.

public transportation passenger transportation services available to the public, including buses, ferries, rideshare, and rail transit.

sawtooth berth a series of bays that are off-set from one another by connecting curblines. They are constructed at an angle from the bus bays. This configuration minimizes the amount of space needed for vehicle pull-in and pull-out.

standard bus a bus that is approximately 40 feet in length.

transit a general term applied to passenger rail and bus service used by the public.

transit benefit facility capital facilities, along with the necessary design considerations, which improve the efficiency of public transportation or encourage the use of public transportation and other HOVs.

1060.03 PARK AND RIDE LOTS

(1) General

Park and ride lots provide parking for people who wish to transfer from private vehicles to public transit or carpools/vanpools. These lots are intended to increase highway efficiency, reduce energy demands, and increase highway safety by reducing traffic congestion. Most park and ride lots located within urban areas are served by transit; however, the smaller lots may only have local transit service. Smaller leased lots, usually at churches or shopping centers, may have no bus service, and only serve carpools and vanpools. Park and ride lots, located in rural areas not served by buses, also serve carpools and vanpools.

Early and continuous coordination with the local transit authority and local government agencies is critical. When a memorandum of understanding (MOU) exists, which

outlines design, funding, maintenance and operations of the lot program, it must be checked for requirements for new lots. If the requirements cannot be met, the MOU must be renegotiated.

(2) Site Selection

Present and future needs are the main considerations in determining the location of a park and ride lot. Public input is a valuable tool. The demand for and the size of a park and ride lot is dependent on a number of factors. Many of these factors vary with the state of the economy, energy availability and cost, perceived congestion, and public attitude, and are somewhat difficult to predict. Therefore, consider sizing the facility to allow for a conservative first-stage construction with expansion possibilities. As a rule of thumb, one acre can accommodate approximately 90 vehicles in a park and ride lot. This allows about 40 percent of the area for borders, landscaping, passenger amenities, bus facilities for larger lots, and future expansion.

Primary concerns during the design stage include:

- Safe and efficient traffic flows, both on and adjacent to the site, for all modes: transit, carpools, vanpools, pedestrians, and bicycles.
- Adequate lighting and good visibility to enhance security and surveillance of the facility to reduce criminal activity.
- Adequate number of parking spaces.
- Comfortable and attractive facilities.
- Facilities that accommodate use by elderly and disabled users and meet state barrier free design codes.

Local transit authority input is critical because, in some cases, the need for a park and ride lot and its location may already have been determined in the development of their comprehensive transit plan. Failure to obtain transit input could result in a site which does not work well for transit vehicle access.

A list of potential sites should be developed. This can be simplified by the use of existing aerial photos, detailed land use maps, or property maps. The goal is to identify properties which can most readily be developed for parking and which have suitable access.

Factors influencing site selection and design of a park and ride facility include:

- Local transit authority master plan.
- Regional transportation plan.
- Local public input.
- Need.
- Traffic.
- Commuter distance.
- Local government zoning.
- Economic, social, and environmental impacts.
- Cost and cost effectiveness.
- Access by all modes of travel.
- Security and appearance.
- Maintenance.
- Available utilities.
- Existing right of way or sundry site.
- Capability for future expansion.

Purchasing or leasing property increases costs substantially. Therefore, state-owned right of way should be the first choice, assuming the other selection criteria are favorable. The use of city or county-owned right of way should also receive prime consideration. The site selected should not jeopardize the present and future integrity of the highway facility.

Each potential site should be further investigated in the field. The field survey serves to confirm or revise impressions gained from the office review. Consider the following when making the review:

- Physical characteristics of the site.
- Current use of surrounding area (zoning).
- Whether the site is visible from adjacent street(s) to enhance security and surveillance of the facility.
- Potential for additional expansion.
- Accessibility for motorists and other modes of travel including transit.
- Proximity of any existing parking facilities, such as church or shopping center parking lots, that are underutilized during the day.
- Potential for joint use of facilities with businesses or land uses compatible with park and ride patrons, such as day care centers or dry cleaners.
- Congestion problems and other design considerations.

After establishing the best potential sites, public meetings and environmental procedures should be completed prior to preparing the design report. Follow environmental procedures as outlined in Chapter 220.

The design report should address the public meetings and environmental processes completed, as well as the preferred and alternate sites considered.

(3) Design

A design report (Chapter 330) is required for all federally funded projects and for WSDOT facilities that are to be paved.

Design features must be in compliance with applicable design standards, specifications, and operating procedures and with any local requirements that may apply. In some cases, variances to local design standards may be necessary to ensure the safety and security of facility users.

Design components may include:

- Geometric design of access points.
- Internal and external circulation.
- Parking space layout.
- Pavements.
- Shelters.
- Exclusive High Occupancy Vehicle (HOV) facilities.
- Bicycle facilities.
- Motorcycle facilities.
- Traffic control devices, including signs, signals, and permanent markings.
- Illumination.
- Drainage and erosion control.
- Security of facility users and vehicles.
- Environmental mitigation.
- Landscape preservation and development.
- Restroom facilities.
- Telephone booths.
- Trash receptacles.
- Traffic data.
- Barrier free design for the disabled.

The degree to which the desirable attributes of any component are sacrificed to obtain the benefits of another component can only be dealt with on a site specific basis. However, these guidelines present the optimum requirements of each factor.

Large park and ride lots use private automobiles as the primary collector distributor mode and transit buses as the line haul mode. The basic principles are also used in designing smaller park and ride lots used primarily for carpools and vanpools with limited or no bus service.

(a) **Access.** Six basic transportation modes are used to arrive at and depart from park and ride lots: walking, bicycle, motorcycle, private automobile including carpools, vanpools, and bus. All these modes should be provided for.

Access to a park and ride lot should not increase congestion on the facility it serves. For this reason, direct access by private automobiles to a freeway or ramp should be avoided. However, direct access for transit is often desirable as long as this access does not add a major conflict point. Often the most efficient access point to a park and ride lot will be on an intersecting collector or local street. If the intersection is already signalized, excellent access can often be provided. Entrances and exits should be located with regard to adjacent intersections, so that signal control at these intersections can be reasonably installed at a later time, if necessary. Storage for vehicles entering the lot and adequate storage for exiting vehicles should be planned. Ease of access will encourage use of the facility.

When it is necessary to provide direct access to an arterial, the location must be carefully considered. It should be located to avoid queues from nearby intersections. Field observation of traffic patterns and queuing at the site is recommended prior to establishing an access point.

The facility should be located to allow the most users possible to make a right turn into the lot, thus reducing the hazard of crossing opposing traffic.

Entrances and exits should be at least 150 feet apart and not closer than 150 feet to a public intersection, all measured curb to curb (minimum standard): 350 feet is desirable. Where the capacity of the parking area does not exceed 150 stalls, the above spacings may be reduced to 100 feet.

Park and ride lots located along one-way couplets should be located between the two one-way streets with access from both streets. When access cannot be provided directly to both streets, it may be necessary to provide additional signing to guide users to and from the facility.

When a park and ride lot has more than 300 parking stalls, at least two entrances and two exits should be provided. The volume per entrance or exit should not exceed 300 vehicles per hour. With lot sizes larger than 500 stalls, two lane exits with traffic signals should be considered for exits onto heavy volume two-way streets. It is desirable for park and ride lots with capacities greater than 1,000 parking stalls to have entrance and exit points to two or more adjacent streets in order to avoid congestion. Entrances should be located so that a vehicle approaching the site from any direction could miss one entrance and find a second one without circuitous routing.

Entrances and exits that will be used by buses should have a minimum width of 15 feet per lane. See Section 1060.08 for corner radii requirements for buses. See Chapter 920 and the standard plans for design of other access points.

All entrances and exits should conform to WSDOT design standards or other published design standards used by the local agency.

The transit route from the freeway or arterial to a park and ride lot, circulation patterns within the lot, and return route should be designed to minimize transit travel time. Exclusive ramp connections for buses and vanpools, both to and from the freeway or street, may be justified by time savings to riders and reduced transit costs. All transit routing should be coordinated with the transit authority.

(b) **Internal Circulation.** Major circulation routes within a park and ride lot should be located at the periphery of the parking area to minimize vehicle-pedestrian conflicts. Circulation within the lot should

accommodate all modes using that part of the facility. Care should be taken to see that an internal intersection is not placed too close to a street intersection. A separate loading area, with priority parking areas, should be considered for vanpools. Whenever possible, buses should not be mixed with cars. Bus circulation routes should be designed to provide for easy movement, with efficient terminal operations and convenient passenger transfers. A one-way roadway with two lanes to permit passing of stopped buses is desirable, with enough curb length and/or saw-tooth type loading areas to handle the number of buses that will be using the facility under peak conditions (see Section 1060.04). Close coordination with the local transit authority is critical in the design of internal circulation for buses and vanpools.

The passenger waiting area should be located either:

1. In a central location with parking for the various user modes surrounding the waiting area, or
2. Located near the end of the facility with parking for the various user modes extending radially from the waiting area.

Large lots may require more than one waiting area.

In shared-type lots, such as shopping centers and churches, the waiting area should be located away from main building(s) so pedestrian and vehicle traffic from the lot will not interfere with the other facility activities.

In an undersized or odd-shaped lot, circulation may have to be compromised in order to maximize utilization of the lot. The general design for the individual user modes should be based on the priority sequence of pedestrians, bicycles, feeder buses, and park and ride area. Traffic circulation should be designed to minimize vehicular travel distances, conflicting movements, and number of turns. Vehicular movements within the parking area should be dispersed by strategic location of entrances, exits, and aisles. Aisles should be aligned to facilitate convenient pedestrian movement toward the bus loading zone.

Any of the internal layout that will be used by buses, including entrance and exit driveways, must be designed to the turning radius of the bus. Additional considerations for internal circulation are:

- All users (auto, pedestrian, bicycle, and bus) should be able to understand how the lot works.
- Drivers should not be confronted with more than one decision at a time.
- Adequate capacity should be provided at entrances and exits.
- Signing should be clear.
- Flexibility to adjust to changes in transit volume and operations should be provided.

(c) **Stall Size.** Internal circulation should be two-way with 90-degree parking. However, due to geometrics of smaller lots, one-way aisles with angled parking may be advantageous. Automobile stall dimensions should be 8.5 feet x 18 feet. When space for vehicle overhang is provided, some of the stalls may be 8.5 feet x 16 feet when parking at 90 degrees. When justified, some of the stalls may be designed for compact cars, 8 feet x 16 feet minimum. Include justification of the percentage of compact stalls.

For additionally information on parking stall size requirements for the disabled, see Section 1060.09.

If possible, aisle lengths should not exceed 400 feet. The greatest efficiency can generally be obtained by placing aisles and rows of parking parallel to the long dimension of the site. All parking should be head-in only. Vehicles and other objects should be excluded from corners where it is necessary to provide adequate intersection sight distances. It is also desirable to have parking on both sides of the aisle. This provides the most efficient design in terms of land use.

(d) **Pedestrian Movement.** Pedestrian movement in parking areas is normally by way of the aisles. Additional provision for pedestrian movement by means of walkways is desirable and could be required in certain situations, as described below. A pedestrian path from any parking stall to the loading zone should be as direct as possible.

Pedestrian walkways should be provided to minimize pedestrian use of a circulation road or an aisle, and to minimize the number of points at which pedestrians cross a circulation road. Where pedestrians originate from an outlying part of a large parking lot and use aisles or circulation roads to approach the loading zone, they will have to travel along an irregular path for a considerable distance. In such cases, consideration should be given to the provision of a walkway which extends toward the loading zone in a straight line.

The maximum distance a pedestrian will have to walk from his car to a loading zone should be in the range of 600 to 800 feet. Longer walking distances require consideration of centrally located or additional loading zones.

Pedestrian crossings should have good visibility both for pedestrians and drivers. Pedestrian walkways and crossings shall be clearly marked.

Facilities for disabled patrons must also be included. All pedestrian walkways shall have curb cuts, built in accordance with the Standard Plans, at all curbs or other sudden elevation changes. The sidewalk grade should be 12:1 or less. For additional disabled accessibility information, see Section 1060.09.

Sidewalks intended for use by pedestrians should have a minimum width of 5 feet. When it is anticipated that both pedestrians and bicycles will use the sidewalks, the minimum width is 8 feet. They should be compatible with existing sidewalks in the area and follow local codes.

The minimum width of a sidewalk adjacent to a loading zone should be 12 feet or the adjacent sidewalk width plus 7 feet, whichever is greater. Pedestrian barriers should be provided where unusual hazards or unreasonable interference with vehicular traffic would result. The barriers may be railings, berms, fencing, walls, or landscaping. These barriers should be installed with sight distance in mind. Minimum horizontal clearance between a barrier and vehicle should be 2 feet. A good parking lot design will minimize the need for pedestrian barriers.

(e) **Bicycle Facilities.** Encouraging the bicycle commuter is important. Each bicycle used to commute to the park and ride lot potentially frees up one parking space. An evaluation should be made to determine if the lot is going to be used by bicyclists and, if bicycles are expected, bicycle lockers or locking racks should be provided. All paved lots that are accessible by bicycle and are served by public transit should have lockers or a rack for a minimum of three bicycles. The bike parking area should be located relatively close to the transit loading area, separated from motor vehicles by curbing or other physical barriers, and have a direct route from the feeding streets. The bicycle parking area should be designed to prevent pedestrians from inadvertently walking into it and tripping. For bicycles, the layout normally consists of stalls 2 feet x 6 feet, at 90 degrees to aisles, with a minimum aisle width of 5 feet. For additional information on bicycle facilities, see Chapter 1020.

(f) **Motorcycle Facilities.** Motorcycle stalls should be 4 feet x 7 feet. Motorcycle storage should be on a Portland cement concrete slab to prevent stands from sinking into the asphalt pavement. Motorcycle stalls should be located relatively close to the transit loading areas.

(g) **Drainage.** Ponding of water in a lot is undesirable both for vehicles and pedestrians. Therefore, adequate slope should be provided for surface drainage. This is particularly true in cold climates where freezing may create icy spots. Recommended grade is 2 percent (0.02 ft/ft). Curb, gutter, and surface drains and grates should be installed where needed. Drainage grates with short, narrow openings, placed perpendicular to traffic direction, should be used in traffic areas to allow safe passage over the grate. Drainage design should be coordinated with the local agency to ensure that appropriate codes are followed (Chapter 1210).

Raised islands shall be held to a minimum so as not to hinder cleaning and snow removal.

(h) **Pavement Design.** Pavement design shall conform to state design specification for each of the different uses and loadings that a particular portion of a lot or roadway is expected to handle. The surfacing type shall have the concurrence of the Materials Laboratory (Chapter 520).

(i) **Traffic Control.** Control of traffic movement can be greatly improved by proper pavement markings. Typically, reflectorized markings for center lines, lane lines, channelizing lines, and lane arrows will be necessary to guide or separate patron traffic and transit traffic. Signing and pavement markings shall conform to Chapters 820 and 830 and to the MUTCD. Park and Ride identification signs should be installed.

(j) **Shelters.** Pedestrian shelters should be considered in areas where the magnitude of transit service and environmental conditions warrant. Consider shelters when 50 or more riders per day are anticipated. Shelters may be individually designed or selected from a variety of commercially available designs to satisfy local needs. The following features should be considered in selecting shelter designs:

- Select open locations with good visibility to minimize potential for criminal activity.
- If enclosed, the open side should be away from nearby vehicle splashing.
- Doors are not recommended, unless need dictates otherwise, because of maintenance and vandalism potential.
- Allow for a small air space below side panels to permit air circulation and prevent the collection of debris.
- Optional features that may be provided are lighting, heat, telephone, travel information (schedules), and trash receptacles.
- Ease of field assembly and repair of components. Contact WSDOT's Architecture Office or local transit agency for shelter designs. Shelters are usually provided by the serving transit authority with the state providing only the shelter pad. Coordination with the local transit authority is essential in shelter design and placement.
- Design shelters to accommodate the disabled.
- See Section 1060.06, Passenger Amenities, for additional information on this subject.

(k) **Illumination.** Adequate lighting is important from a safety standpoint and as a deterrent to criminal activity in both the parking area and the shelters. Illumination should be considered for all park and ride lots (Chapter 840). Only security lighting is provided during hours of low usage. Locate poles so that vehicle movements and parking are not obstructed. If

raised islands are used to separate adjacent parking rows, place the poles on the islands. In determining the locations of luminaire poles, plan for future expansion of the facility.

(l) **Landscape Preservation and Development.** Selective preservation of existing vegetation is often a cost-effective means to provide a balanced environment for the park and ride lot user. Preservation may reduce environmental impacts and give "instant" results. Landscaping of park and ride lots is desirable for aesthetic as well as ecological reasons and should consist of plantings that will be compatible with the operation of the facility. Landscaping shall be cost-effective, comply with the local requirements, and satisfy the functional needs of the park and ride lot. The type of plantings and their placements should not interfere with:

- Adequate lighting for the area, thus resulting in a potential safety hazard to the patron.
- Adequate sight distance for cars and transit vehicles, especially at intersections and pedestrian crossings.
- The proper placement of the traffic control devices.
- The ability of pedestrians, bicyclists, and the disabled to use the facility.
- Security of patrons and their property.

Trees provide shade and visual interest, reduce glare, and are less costly to maintain than shrubs and ground cover. Therefore, trees should be the dominant plant material. Trees should be placed only where they will not block sight distance for cars or buses and proper clearances can be maintained as they mature. Landscaping should be designed in such a manner that hiding places for vandals are minimized. Landscaping can provide an effective means for establishing pedestrian paths and walking patterns within the site. In parking zones, sufficient setback must be provided for all plants so the front or rear overhang of cars does not damage them. Earth forms, such as berms, mounds, and swales are a good design tool to provide for low-cost screening, delineation, visual interest, and drainage. Landscaping should be designed so that security patrols can see into the lot from adjacent streets without entering. Landscape design shall keep maintenance requirements to a minimum.

It is desirable that one tree be planted per 12 parking stalls so that no parking stall is farther than 75 feet from a tree. These trees provide luminaire light diffusion for adjacent property owners.

Irrigation also needs to be addressed in the landscape design.

(m) **Fencing.** See Chapter 1460 for guidelines for fencing.

(n) **Maintenance.** A comprehensive maintenance plan should be developed as per established state policy either as part of a memorandum of understanding with the local authority or for use by state maintenance forces. Maintenance of park and ride lots outside state right of way shall be the responsibility of the local transit authority. It is encouraged that park and ride lots inside state right of way should also be maintained by the local transit authority. Agreements for maintenance by others shall be negotiated during the design phase and documented in the design report (Chapter 330).

Maintenance cost estimates, funding source, and legal responsibilities for accidents and security are to be addressed in the maintenance plan and documented in the design report. The location and type of site (new or existing), and method of performing maintenance, will generally determine the extent of the maintenance program.

The following maintenance activities should be considered:

- Periodic inspection.
- Pavement repair.
- Traffic control devices (signs and pavement markings).
- Lighting.
- Mowing.
- Cleaning of drainage structures.
- Sweeping/trash pickup.
- Landscaping.
- Shelters.
- Snow and ice control.

A sound maintenance program should be established well ahead of the date a park and ride lot is placed into operation.

1060.04 TRANSFER/TRANSIT CENTERS

(1) Introduction

Transfer centers are essentially large bus stops where buses on a number of routes converge to allow riders the opportunity to change buses. Transfer centers are of particular importance in many transit systems, since riders in many areas are served by a "feeder" route; to travel to area destinations not served by the feeder, residents must transfer.

Transit centers are frequently associated with a major activity center. In this case, the activity is beyond simply a transfer between buses but also involves the center as a destination point.

This section provides general design considerations of transfer and transit centers. The development of a particular center requires consideration of such features as

passenger volume, number of buses on site at one time, and local auto and pedestrian traffic levels. These factors will dictate the particular requirements of each center.

(2) Bus Berths

Where several transit routes converge and where buses congregate, multiple bus berths or spaces are sometimes required. Parallel and shallow sawtooth designs are the options available when considering multiple berths.

An important aspect in multiple bus berthing is proper signing and marking for the bus bays. Each bay should clearly delineate the route served. In addition, the pavement should be marked with striping to indicate correct stopping positions.

Consideration should be given to using Portland Cement Concrete Pavement where pedestrians will walk for ease of cleaning.

Where buses are equipped with a bicycle rack, the design should provide for loading and unloading of bicycles.

Figure 1060-1 shows typical parallel and sawtooth designs for parking standard 40-foot buses for loading and unloading passengers at a transfer center. The sawtooth design does not require buses to arrive or depart in any order. The parallel design shown requires that the buses either arrive or depart in order.

Where space is a consideration, the sawtooth design can be used for independent arrival but dependent departure. Figure 1060-2 is an example of a sawtooth transit center. In an in-line berthing design, space requirements are excessive if this same access is to be provided. More commonly, in an in-line design, buses pull into the forward-most available berth. Buses must then leave in the order of arrival. The local transit authority should be involved throughout the design process and must concur with the final design.

In the design of parallel bus berths, additional roadway width is required for swing-out maneuvers if shorter bus loading platforms are utilized. The roadway width and amount of lineal space at the bus loading platform are directly related where designs allow departing buses to pull out from the platform around a standing bus. For example, a 40-foot bus with a 16-foot forward clearance requires 22 feet of roadway width for its pull-out maneuver. This condition requires a roadway width of at least 24 feet and a total minimum berth length of 56 feet for each bus. Thus, five buses would require 264 feet of linear distance. The shorter the berth length allowed, the wider the roadway must be.

Considerable linear space is necessary in a parallel design to permit a bus to overtake and pull into a platform ahead of a parked bus. For example, a 40-foot bus requires approximately 92 feet to pull in, assuming the rear end of the bus is 1 foot out from the platform curb and 56 feet when a 5-foot "tailout" is permitted.

Parallel designs, even if signed properly, require strict parking enforcement, since they give the appearance of general curbside parking areas. Pavement marking is most critical for parallel design. Sawtooth designs offer the advantage of appearing more like a formal transit facility, which tends to discourage unauthorized parking.

(3) Flow/Movement Alternatives

Two primary alternatives for vehicle and passenger movement are possible for transfer centers, regardless of the type of bus berths used. As shown in Figure1060-3, all buses may line up along one side of the transfer center. This type of arrangement is generally only suitable for a limited number of buses, due to walking distances required for transferring passengers. For a larger number of buses, an arrangement similar to Figure 1060-4 can minimize transfer time requirements by consolidating the buses in a smaller area.

1060.05 BUS STOPS AND PULLOUTS

(1) Introduction

The bus stop is the point of contact between the passenger and the transit services. The simplest bus stop is a location by the side of the road. The highest quality bus stop is an area that provides passenger amenities such as a bench and protection from the weather.

Bus pullouts allow the transit vehicle to pick up and discharge passengers in an area outside the traveled way. The interference between buses and other traffic can be reduced by providing bus pullouts.

(2) Bus Stops Designation and Location

The location of bus stops should be standardized within the system to avoid undue confusion. However, standardization should not be a substitute for sound judgement whenever conditions render standard practice inappropriate. It is imperative that bus stops be of adequate length and located so that the adverse effect on traffic (including pedestrians) is kept to a minimum.

The following should be considered when locating bus stops:

- Bus stop placement requires the consent of the jurisdiction having authority over the affected right of way and the local transit authority.
- The physical location of any bus zone should be primarily determined by the following considerations: maximizing safety, operational efficiency, minimizing adjacent property impacts, and user destination points.
- Public transportation agencies are typically responsible for maintenance of transit facilities within the public right of way.

These elements are discussed in the following subsections.

The proper spacing for bus stops represents a trade-off between passenger convenience and bus operating speed. Closer spacing reduces passenger walking distance, while longer spacing permits faster and less expensive bus operations. The proper spacing in any specific area depends on the nature and layout of adjoining land uses and the number of passengers expected. Bus stops should be as close as possible to passenger origins and destinations.

If activity along the bus route is uniform, the typical bus stop spacing should be about 1,000 feet. A general minimum spacing should be 500 to 600 feet within the central business district (every 2 to 3 blocks). In this range, stops should be provided where streets intersect or where walkways from the surrounding areas reach the main street. Evaluation of pedestrian walking distances as a design issue in subdivision layout may yield short walking distances to bus stops and encourage transit use.

In suburban areas (mostly single-family housing with pockets of open space and undeveloped land), bus stops should be located approximately every 1,250 feet (four per mile). Stops are generally not provided where residential density drops below four units per acre.

If commercial, residential, or industrial activity along the bus route is not clustered, bus stops need not be located uniformly along routes, but can be sited at the activity nodes. Greater spacings, 1,500 to 2,500 feet (approximately two to four per mile), may be possible in these circumstances.

In order to evaluate a new route and build ridership, placement of bus zones may initially depart from the above guidelines.

(3) Bus Stop Placement

Where traffic volume is low, on-street parking is prohibited, and a stopped bus will not impede traffic, the bus stop may simply be a designated location where the bus can pull up to the curb or to the edge of the roadway. The location will be dictated by patronage, the intersecting bus routes or transfer points, security of the rider, and the need for convenient service.

The specific bus stop location is influenced not only by convenience to patrons, but also by the design characteristics and operational considerations of the highway or street. Bus stops are usually located in the immediate vicinity of intersections. Where blocks are exceptionally long, or where bus patrons are concentrated well removed from intersections, midblock bus stops, along with midblock crosswalks, may be used.

Bus stop capacity of one bus will typically be adequate for up to 30 buses per hour.

Where on-street auto parking is permitted, a designated area where the bus can pull in, stop, and pull out must be provided. Figure 1060-5 illustrates several types of bus stops.

- Far-side, with a stop located just past an intersection;
- Near-side, with a stop located just prior to an intersection; and
- Mid-block, with a stop located away from any intersections.

In general, a far-side stop is preferred, however, examine each case separately and determine the most suitable location giving consideration to such things as service to patrons, efficiency of transit operations, and traffic operation in general. Near-side and mid-block bus stops may be suitable in certain situations. Bus stops should utilize sites which discourage unsafe pedestrian crossings, offer proximity to activity centers, and satisfy the general spacing requirements discussed previously. Following are descriptions of the advantages and disadvantages of each type of site.

(a) **Far-Side Bus Stops.** Advantages:

- Right turns can be accommodated with less conflict.
- A minimum of interference is caused at locations where traffic is heavier on the approach side of the intersection.
- Will cause less interference where the cross street is one-way street from left to right.
- Stopped buses do not obstruct sight distance for vehicles entering or crossing from a side street.
- At a signalized intersection, buses can find a gap to enter the traffic stream without interference, except where there are heavy turning movements into the street with the bus route.
- Waiting passengers assemble at less-crowded sections of the sidewalk.
- Buses in the bus stop will not obscure traffic control devices or pedestrian movements at the intersection.

Disadvantages:

- Intersections may be blocked if other vehicles park illegally in the bus stop, or if the stop is too short for occasional heavy demand.
- Stops on a narrow street or within a traffic lane may block the intersection.

(b) **Near-Side Bus Stops.** Advantages:

- A minimum of interference is caused at locations where traffic is heavier on the leaving side than on the approach side of the intersection.
- Will cause less interference where the cross street is one-way from right to left.
- Passengers generally exit the bus close to crosswalk.

- There is less interference with traffic turning into the bus route street from a side street.

Disadvantages:

- Heavy vehicular right turns can cause conflicts, especially where a vehicle makes a right turn from the left of a stopped bus.
- Buses often obscure sight distance stop signs, traffic signals, or other control devices, as well as pedestrians crossing in front of the bus.
- Where the bus stop is too short for occasional heavy demand, the overflow will obstruct the traffic lane.

(c) **Mid-Block Bus Stops.** Advantages:

- Buses cause a minimum of interference with sight distance of both vehicles and pedestrians.
- Stops can be located adjacent to major bus passenger generators.
- Waiting passengers assemble at less-crowded sections of the sidewalk.

Disadvantages:

- Pedestrian jaywalking is more prevalent.
- Patrons from cross streets must walk farther.
- Buses may have difficulty re-entering the flow of traffic.

Some general guidelines for the location of bus stops are:

- At intersections controlled by signals, stop, or yield signs, when transit is critical but traffic and parking are not critical, a near-side stop is preferable.
- At intersections where heavy left or right turns occur, a far-side bus stop should be used. If a far-side bus stop is impractical, the stop should be moved to an adjacent intersection or to a mid-block location in advance of the intersection.
- It is important that the bus stop be clearly marked as a no parking zone with signs and/or curb painting.
- For safety and accessibility, all loading and unloading should be made from the curb, not in the street/traffic lane.
- At intersections where bus routes and heavy traffic movements diverge, a far-side stop can be used to advantage.
- Mid-block stop areas are recommended under the following conditions: (1) where traffic or physical street characteristics prohibit a near or far-side adjacent to an intersection; or (2) where large factories, commercial establishments, or other large bus passenger generators exist. A mid-block stop should be located at the far-side of a pedestrian crosswalk (if one exists) so that standing buses will not block an approaching motorist's view of pedestrians in the crosswalk.
- Sight distance conditions generally favor far-side bus stops, especially at unsignalized intersections. A driver approaching a cross street on the through lanes can see any vehicles approaching from the right. With near-side stops the view to the right may be blocked by a stopped bus. Where the intersection is signalized, the bus may block the view of one of the signal heads.
- For security purposes the availability of adequate off-street lighting is an important consideration.

(4) Bus Pullouts

Bus pullouts are generally most appropriate when one or more of the following situations exits:

- Traffic in the curb lane exceeds 250 vehicles during the peak hour.
- Passenger volume at the stop exceeds 20 boardings an hour.
- Traffic speed is greater than 45 miles per hour.
- Accident patterns are recurrent.

The separation of transit and passenger vehicles is critical in cases of high bus or traffic volumes or high speeds. Bus stops in the travel lane may be unsafe or impede the free flow of traffic. Bus pullouts should also be considered at locations with high bus passenger loading volumes that cause traffic to back up behind the stopped bus.

To be fully effective, the pullout should incorporate a deceleration lane or taper, adequate staging area for all anticipated buses, and a merging lane or taper. As roadway operating speeds increase, the taper length should increase accordingly. Many times, high traffic volumes will not allow sufficient gaps for the bus operator to return the vehicle safely to the traffic stream. When this happens, the operator may opt not to use the turnout.

Figure 1060-6 illustrates the dimensions and design features of bus pullouts associated with near-side, far-side, and mid-block bus pullouts.

There are no absolute criteria for locating bus pullouts. Where a pullout is being considered, the transit agency must be involved. Factors controlling the appropriate location and eventual success of a pullout include:

- Operating speed.
- Traffic volume.
- Number of passenger boardings.
- Available right of way.
- Roadway geometrics (horizontal and vertical).
- Construction costs.
- Location of curb ramps.

Figure 1060-7 illustrates the dimension and design requirements of far-side bus zones and pullouts where buses will stop after making a right turn. Adherence to these designs should allow safe stopping of buses with minimal interference with legally parked vehicles.

It is important in the design of bus pullouts to consider the need to provide structurally adequate pavement for the bus pullout (Chapter 520), otherwise the surfacing may be damaged by the weight of the buses.

1060.06 PASSENGER AMENITIES

(1) Introduction

Providing an attractive, pleasant setting for the walk and wait are important elements in attracting bus users.

A passenger arriving at a bus stop desires a comfortable place to wait. Important elements of a bus stop are:

- Safety from passing traffic.
- Adequate lighting.
- Security.
- Paved surface.
- Protection from the environment.
- A seat (if the wait may be long).
- Information about the routes serving the stop.

Providing safety from passing traffic involves locating stops where there is adequate space, so passengers can wait away from the edge of the traveled roadway. The buffering distance required from the roadway increases with traffic speed and traffic volume. Three to 5 feet is adequate where vehicle speeds are 30 miles per hour. A heavy volume arterial with speeds of 45 miles per hour can require a distance of 8 to 10 feet for passenger comfort.

Passengers arriving at bus stops, especially infrequent riders, want information and reassurance. Information provided should include the numbers or names of routes serving the stop. Other important information may include a system route map, the hours and days of service, schedules, and a phone number for information. The information provided and format used is typically the responsibility of the local transit system.

At busier stops, including park and ride lots, a public telephone should be provided. For all paved park and ride lots, a desirable site for a public telephone should be selected and conduit provided whether or not a telephone is currently planned. Where shelters are not provided, a bus stop sign and, depending on weather conditions, passenger bench are desirable. The sign indicates to passengers where to wait and can provide some basic route information.

(2) Passenger Shelters

Passenger shelters should provide protection for waiting transit users. In accomplishing this task, the shelter itself must be located conveniently for users without creating hazards — such as blocking the line of sight of automobile drivers or blocking the sidewalk. Figure 1060-8 illustrates a clear sight triangle that will permit shelter siting with minimal impact on sight distances at urban arterial intersections without traffic controls. The dimensions may vary by local jurisdiction — check local zoning ordinances or with appropriate officials.

State Motor Vehicle Funds cannot be used for design or construction of shelters, except for the concrete pad. Funding of shelters must be handled by the transit agency or some other local agency.

Adequate lighting is necessary to enhance passenger security. Lighting makes the shelter visible to passing traffic and allows waiting passengers to read information provided. General street lighting is usually adequate. Where street lights are not in place, additional street lights or transit shelter lights should be considered.

A properly drained, paved surface is necessary so that passengers will not traverse puddles and mud in wet weather. Protection from the environment is typically provided by a shelter that provides shade from the sun, protection from rain and snow, and a wind break. Shelters can range from simple to elaborate. The latter type may serve as an entrance landmark for a residential development or employment complex and be designed to carry through the architectural theme of the complex. If a nonpublic transportation entity shelter is provided, its design and siting must be approved by the local transit operator. The reasons for this approval requirement include safety, barrier-free design and long-term maintenance concerns.

Simple shelters, such as that illustrated in Figure 1060-9, may be designed and built by the transit agency or purchased from commercial vendors. The WSDOT Architecture Office may be contacted for more complex designs.

If resources permit, shelter placement should be considered at most bus stops in new commercial and office developments and in places where large numbers of elderly and disabled persons may wait, i.e., hospitals, senior centers, etc. In residential areas, shelters are placed only at the highest volume stops.

1060.07 ROADWAY AND VEHICLE DESIGN CRITERIA CHARACTERISTICS

(1) Paving Sections

The pavement design (type and thickness) of a transit benefit project, whether initiated by a public transportation agency or a private entity, must be coordinated with WSDOT or the local agency public works department depending on highway, street, or road jurisdiction. These agencies play a major role in determining the paving section for the particular project. Early and frequent coordination is required.

Paving section design is determined by the volume and type of traffic, design speed, soil characteristics, availability of materials, construction costs, and maintenance cost. Important characteristics of good pavement design are the ability to retain shape and dimensions, the ability to drain, and the ability to maintain adequate skid resistance.

See Chapter 510 "Investigation of Soils and Surfacing Materials" and Chapter 520 "Design of Pavement Structure" for guidance in the design of pavements.

(a) **Grades.** Roadway grades refer to the maximum desirable slope or grade, or the maximum slope based upon the minimum design speed that a standard 40-foot transit bus can negotiate safely. Guidance on roadway grades is in Chapter 440 or in the *Local Agency Guidelines*. Public transportation agencies or private developers should coordinate their needs with WSDOT or the appropriate local agency.

Speed of buses on grades is directly related to the weight/horsepower ratio. Grades should be selected to permit uniform operation at an affordable cost. In cases where the roadway is steep, a climbing lane for buses and trucks may be needed. Abrupt changes in grade should be avoided due to bus overhangs and ground clearance requirements.

(b) **Lane Widths.** Roadway and lane widths are generally regulated by WSDOT or the *Local Agency Guidelines*, based upon the functional class of highway or road under their respective jurisdiction.

Private developers should contact these agencies early in the design process to ensure that roadway and lane widths are consistent with applicable standards.

Roadway capacity is directly affected by lane width. As lanes narrow, anticipated capacity is lowered. Controls determining adequate lane width include design speed, anticipated traffic volume, types of user vehicles, available right of way, and roadside obstructions, i.e., retaining walls, light poles, and street furniture.

For lanes to be used by High Occupancy Vehicles (HOV), buses, vanpools, and carpools, the recommended width is 12 feet. Lane widths should not be less than 12 feet when transit volumes are high. Chapter 1050 provides additional information on HOV facilities.

(2) Vehicle Characteristics/Specifications

Most transit agencies operate several types of buses within their system. Vehicle sizes range from the articulated bus to passenger vans operated for specialized transportation purposes and vanpooling.

Each manufacturer within each of the general classifications may vary dimensions such as wheelbase, height, and vehicle overhang. The total gross vehicle weight rating (GVWR) varies considerably among manufacturers for the type of general vehicle classification. Because of these differences, more specific design information should be obtained from the local transit authority.

The principal dimensions affecting design are the minimum turning radius, the tread width, the wheelbase, and the path of the inner rear tire. Effects of driver characteristics and the slip angle of the wheels are minimized by assuming that the speed of the vehicle for the minimum radius (sharpest) turn is less than 10 miles per hour.

(a) **Large Transit Buses.** These traditional urban transit service vehicles are typically 40 feet long and have a wheelbase of approximately 25 feet. Many agencies operate 35-foot buses which have a 19-foot wheelbase.

Many of these vehicles are equipped with either front or rear door wheelchair lifts, or a front "kneeling" feature that reduces the step height for mobility impaired patrons.

(b) **Articulated Transit Bus.** Because articulated buses are hinged between two sections, these vehicles can turn on a relatively short radius. Articulated buses are typically 60 feet in length with a wheelbase of 19 feet from the front axle to mid-axle and 24 feet from the mid-axle to the rear axle.

(c) **Small Transit Buses.** Some of the smaller transit agencies operate 26 to 30-foot transit coaches which are designed for use in low volume situations. Modified vans are used for transportation of the elderly and disabled persons and shuttle services. Passenger vans are a third type of small bus, used for specialized transportation and vanpooling. Some of these vans have been modified to provide special seating arrangements. Since the vehicle specifications vary so widely within this category, consult the local transit authority or bus manufacturer for specifications of the particular vehicle in question.

1060.08 INTERSECTION RADII

A fundamental characteristic of transit accessible development is safe, convenient access and circulation for transit vehicles. It is important that radii at intersections be designed to accommodate turning buses. Adequate radii will reduce conflicts between automobiles and buses, reduce bus travel time, and provide maximum comfort for the passengers.

The following major factors should be taken into consideration in designing intersection radii:

- Right of way availability.
- Angle of intersection.
- Width and number of lanes on the intersecting streets.
- Design vehicle turning radius.

- Parking at the intersection.
- Allowable bus encroachment.
- Operating speed and speed reductions.
- Pedestrians.
- Bicycles.

Because of space limitations and generally lower operating speeds in urban areas, curve radii for turning movements may be smaller than those normally used in rural areas. It is assumed that buses making turns are traveling at speeds of less than 10 miles per hour. Figures 1060-10 and 11 illustrate the Turning Templates and design vehicle specifications for a standard 40-foot bus and an articulated bus.

Figure 1060-12 illustrates appropriate radii at intersections for four types of parking configurations which may be associated with an intersection. Radii less than minimum result in encroachment into adjoining lanes or curbs. As intersection radii increase, pedestrian crossing distances increase.

To ensure efficient transit operation on urban streets, it is desirable to provide corner radii of from 35 to 50 feet (based on the presence of curb parking on the streets) for right turns to and from the through lanes. Where there are curb parking lanes on both of the intersecting streets and parking is restricted for some distance from the corner, the extra width provided thereby serves to increase the usable radius.

Angle of intersection also influences the turning path of the design vehicle. Figure 1060-13 shows the effect of the angle of intersection on the turning path of the design vehicle on streets without parking. Figure 1060-13 also illustrates different cases; when a vehicle turns from proper lane and swings wide on the cross street, and when the turning vehicle swings equally wide on both streets.

1060.09 DISABLED ACCESSIBILITY

(1) Introduction

Public transportation providers have an obligation under both state and federal laws to create and operate capital facilities and vehicles that are usable by the wide variety of residents in the service area. A major need arising from this obligation is to provide transportation service to the transit dependent, among whom are disabled individuals.

According to the report titled "Persons of Disability in Washington State — A Statistical Profile 1970-1980" by the Washington State Employment Security Department, the percentage of persons with disabilities within the state in the working age years of 16 to 64 was 8.7 percent in 1980. The number of elderly people with disabilities that affect mobility is far higher.

Federal law requires all new or significantly rehabilitated buses to be accessible to the disabled. Transit agencies are also required to provide demand response service comparable with the fixed route service.

Barrier-free design means more than just accommodating wheelchairs. Care needs to be given not to create hazards or barriers for people who have vision or hearing impairments. They key is to design clear pathways without obstacles and signs that are simple with large print.

Transit Benefit facilities are designed for accessibility aspects under the Uniform Federal Accessibility Standards (UFAS) and/or, Chapter 51-10 WAC "Washington State Regulations for Barrier-Free Facilities" or local agency standards where applicable.

(2) Park and Ride Lots

Parking stalls for the disabled should be located in close proximity to the transit loading and unloading area. Stalls shall be at least 8 feet wide with a 5-foot adjacent loading aisle on each side with sidewalk curb cuts (see Standard Plans). Two accessible parking stalls may share a common access aisle. Provide disabled stalls according to the following table:

Total Parking Stalls in Lot	Required Disabled Parking Stalls
1 to 25	1
26 to 50	2
51 to 75	3
76 to 100	4
101 to 150	5
151 to 200	6
201 to 300	7
301 to 400	8
401 to 500	9
501 to 1,000	2% of total
1,001 and over	20 plus 1 for each 100 over 1,000

No more than two of these stalls need be striped and signed for disabled use at the time of initial operation. The remaining stalls may be striped for standard usage, but the curb cuts for wheelchair ramps should be provided for each future stall. Additional stalls shall be made available for use by disabled patrons when demand indicates the need.

A parking stall for disabled persons shall be signed according to the requirements of RCW 46.61.581.

Disabled facilities should be in accordance with the following:

- Disabled patrons should not have to cross access roads enroute to the bus loading zone.
- Disabled patrons should not be forced to travel behind parked cars (in their circulation path).
- Wheelchair ramps shall be provided to facilitate the movement of physically disabled patrons.

- Parking stalls and access aisles shall be level with surface slopes not exceeding 2 percent.

(3) Bus Stops and Shelters

In order to use buses which are accessible, bus stops must also be accessible to disabled persons. The nature and condition of streets, sidewalks, passenger loading pad, curb ramps, and other bus stop facilities can constitute major obstacles to mobility and accessibility. State, local, public and private agencies need to work closely with public transportation officials to enhance accessibility for people with disabilities. A significant component of bus stop accessibility is in the provision of "pads" for the deployment of wheelchair lifts. The terrain where a wheelchair pad is located should be level. The pad should be constructed of cement concrete, asphalt concrete pavement, or a similar impervious surface. The approach to the pad should not consist of grass, gravel, or any surface where a wheelchair might lose traction. The pad should have a minimum slope toward the curb sufficient for drainage purpose. The stop pad should measure at least 10 feet in length and 8 feet in width. When right of way or other limitations restrict the pad size, a smaller pad may be provided, but it must be able to accommodate a wheelchair.

The local public transit agency should be involved in the pad design to help ensure that lifts can actually be deployed at this site.

In order to access a bus stop, it is important that the path to these facilities also be accessible by the use of sidewalks with curb ramps. The Standard Plans contain design and construction information for cement concrete sidewalks and curb ramps. A continuous curb ramp is used for accessibility of disabled park and ride users as part of the accessible path to the bus stop and shelter.

In the design of bus stops and/or shelters the following should be considered:

- Inclusion of bus stop disabled access as a critical factor in the selection of locations for pedestrian improvements within the safety component of the state's or local agency capital improvement program.
- Ensure that curb ramps are properly sloped and sized for safe wheelchair usage and that they have textured surfaces to warn blind persons (see the Standard Plans).
- Identification of places that require sidewalks.
- Encouragement that property owners keep existing sidewalks in a good state of repair.
- Encouragement and continued emphasis of standards requiring all new street construction or reconstruction to include sidewalk or pedestrian walkway and curb ramps.
- Bus stop should be identified with curb painting and/or bus stop signs. Both disabled and nondisabled persons will benefit from this.
- All bus stops that can be made accessible should be made accessible, whether or not the paths to them are accessible, as future improvements may make the paths accessible.
- All bus stop signs along a route served by accessible vehicles should be marked with the blue international accessibility symbol conforming to the requirements of RCW 70.92.120 for easier identification by users.
- Existing as well as future park and ride locations must, by state law, include reserved parking for disabled persons, marked with signs as outlined in RCW 46.61.581.

1060.10 REFERENCES

AASHTO, *Guide for the Design of High Occupancy Vehicle and Public Transfer Facilities, 1983.*

Performance Criteria and Design Standards for Park and Ride Lots, Metro Guidelines, April 1974.

An Illustrated Handbook of Barrier Free Design, Washington State Rules and Regulations, November 1989.

Uniform Federal Accessibility Standard, Accommodations for the Physically Handicapped, FHWA, April 1984.

Manual on Uniform Traffic Control Devices for Streets and Highways, (MUTCD), FHWA.

WSDOT Standard Plans for Road, Bridge, and Municipal Construction (M 21-01).

Design Guidelines for Bus Facilities, Orange County Transit District, Garden Grove, California, November 1987.

A Guide to Land Use and Public Transportation, Snohomish County Transportation Authority, December 1989.

Access By Design: Transit's Role in Land Development, Mass Transit Administration, Maryland Department of Transportation, September 1988.

Public Transportation Facilities Design Manual, Thurston Regional Planning Council, January 1986.

Bus Use of Highways: Planning and Design Guidelines, National Cooperative Highway Research Program Report 155, Transportation Research Board, 1975.

A Policy on Geometric Design of Highways and Streets, American Association of State Highway and Transportation Officials, 1984.

A Guide for Transportation Landscape and Environmental Design, American Association of State Highway and Transportation Officials, 1991.

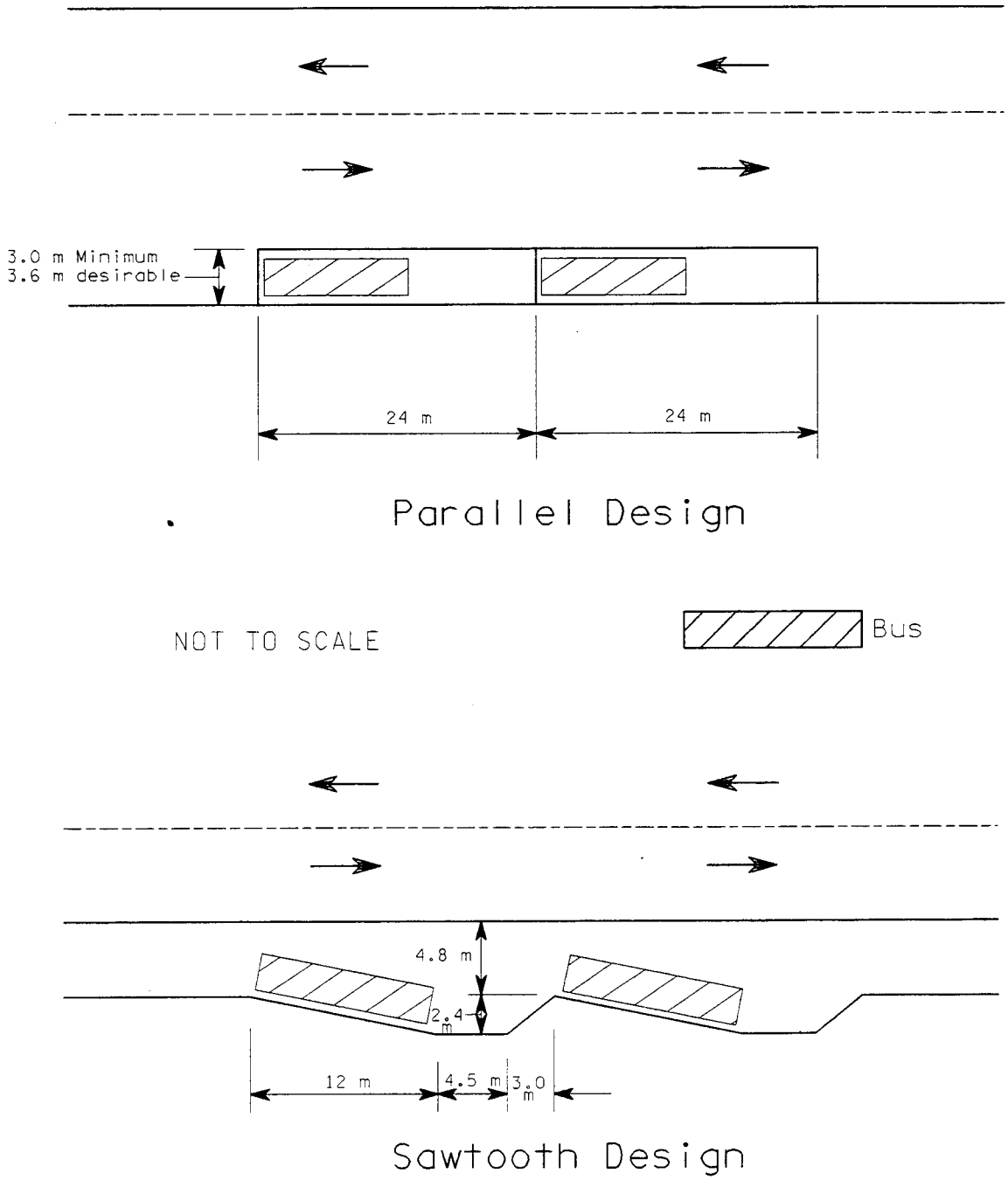

BUS BERTH DESIGNS

Figure 1060-1
(Metric)

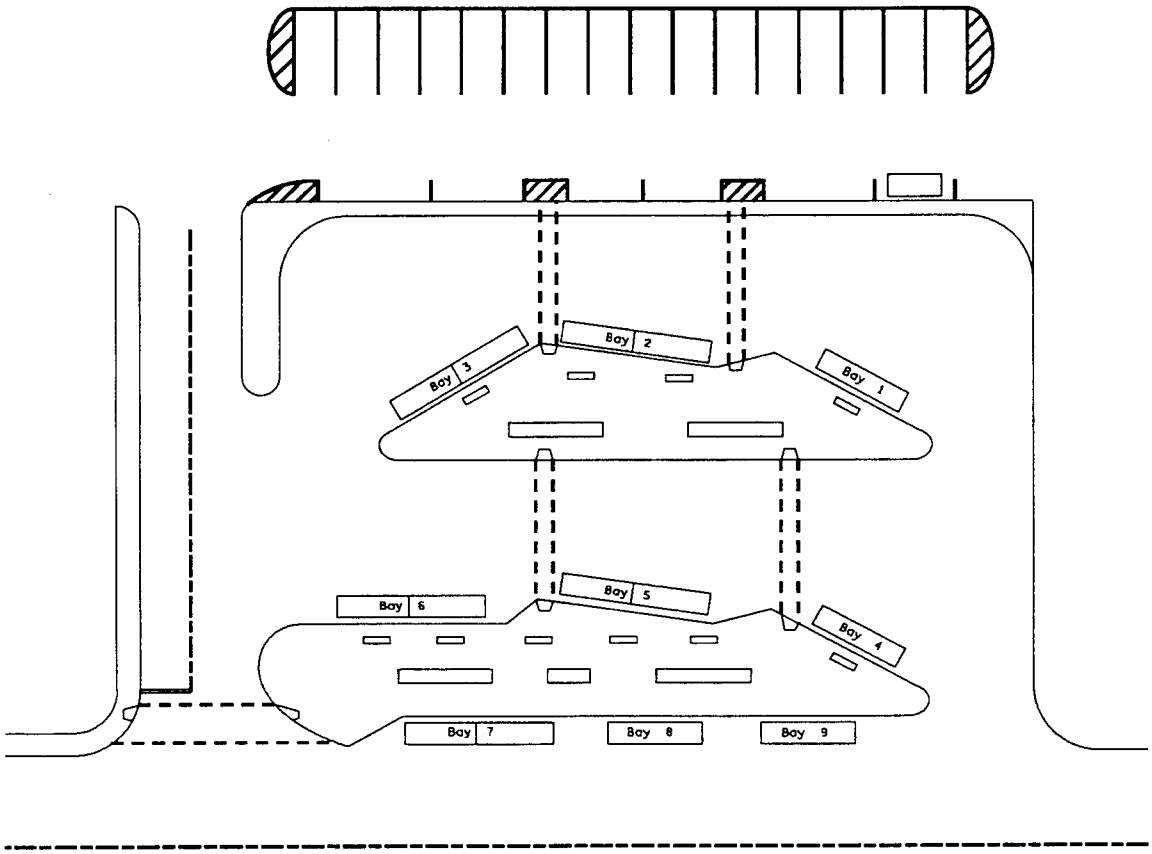

TRANSIT CENTER
SAWTOOTH BUS BERTH
DESIGN EXAMPLE
Figure 1060-2

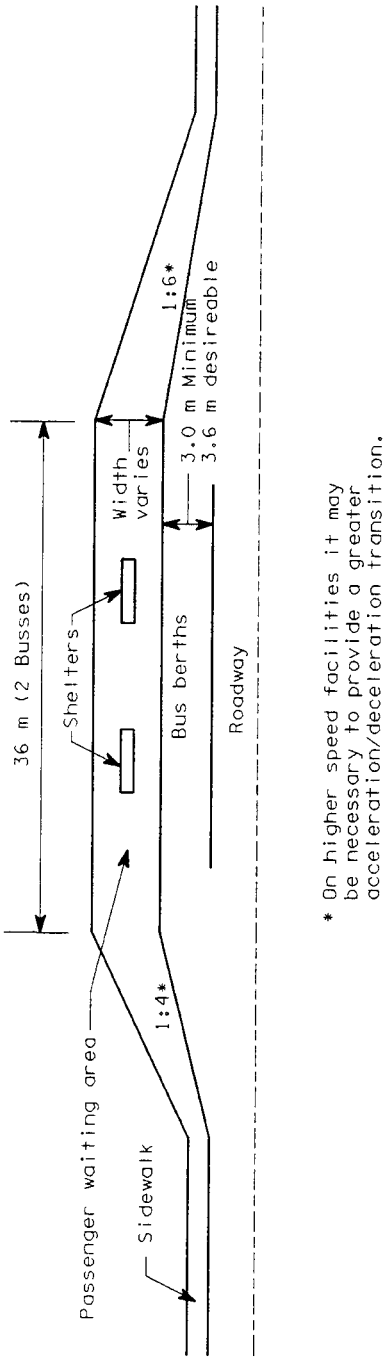

BUS TURNOUT TRANSFER CENTER

Figure 1060-3
(Metric)

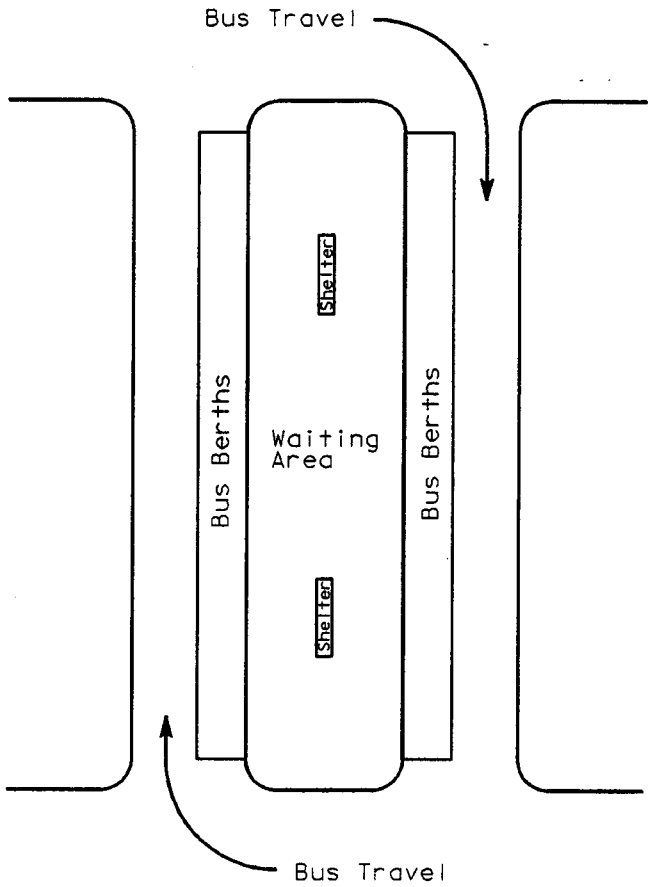

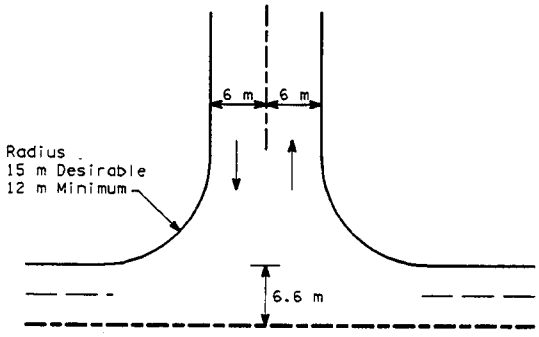

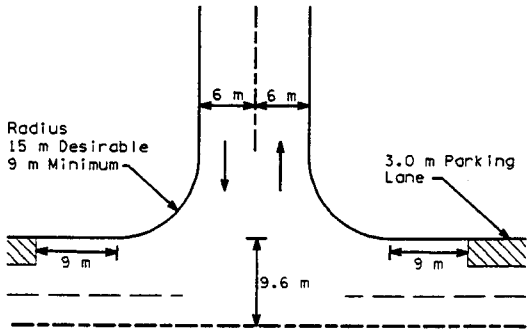

OFF-STREET TRANSFER CENTER

Figure 1060-4
(Metric)

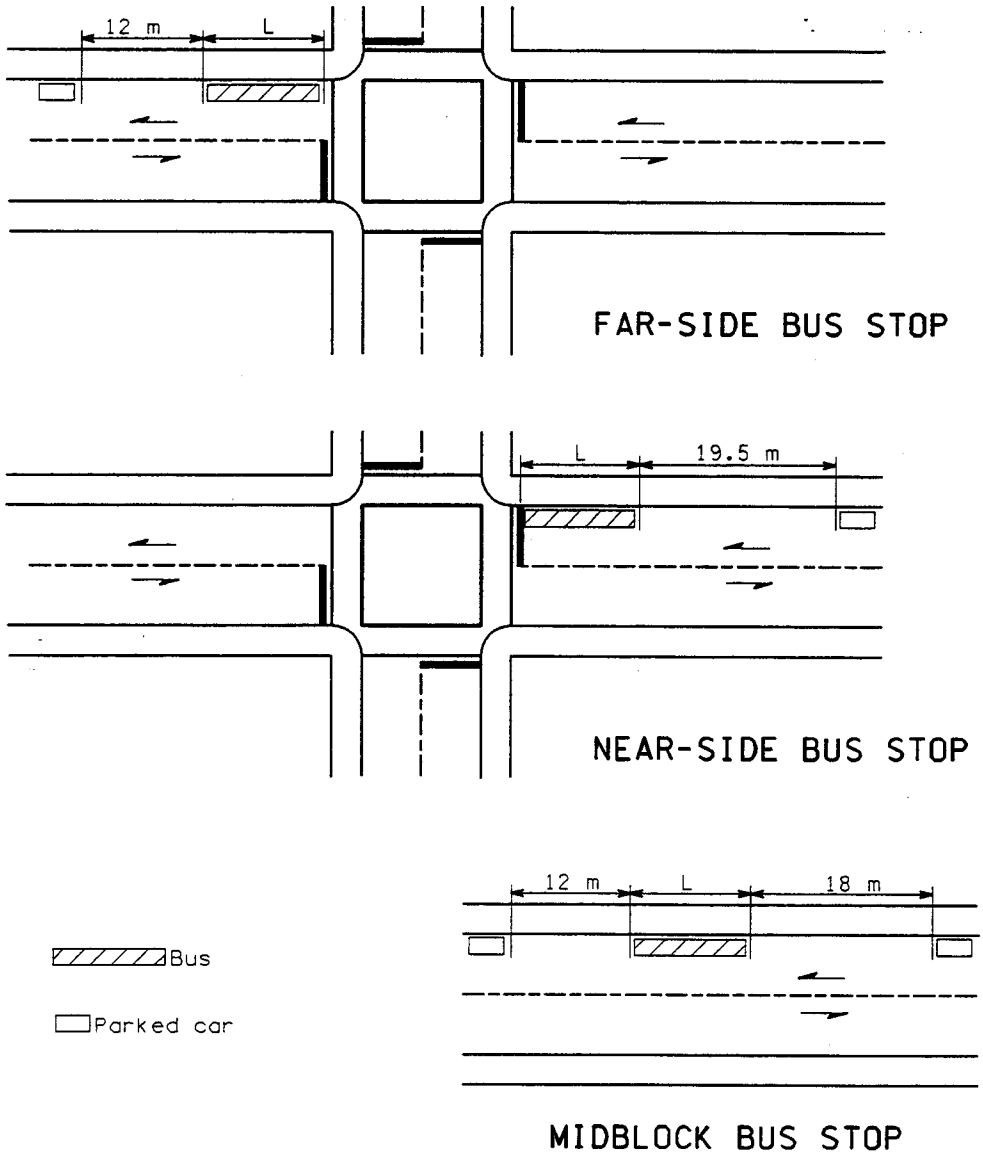

Minimum Lengths for Bus Curb Loading Zones (L)[1]

	Loading Zone Length (meters)					
	One Bus Stop			Two Bus Stops		
Approx. Bus Length(L)	Near Side[2,3]	Far Side[2]	Mid Block	Near Side[2,3]	Far Side[2]	Mid Block
7.5	27	19.5	37.5	36	27	45
9	28.5	21	39	39	30	48
10.5	30	22.5	40.5	42	33	51
12	31.5	24	42	45	36	54
18	37.5	30	48	57	48	66

[1]Based on bus 0.3 m from curb. When bus is 0.15 m from curb, add 6.0 m near side, 4.5 m far side, and 6.0 m midblock. Based on streets 12.0 m wide, add 4.5 m when 10.5 m wide and 9.0 m when 9.6 m wide.

[2]Measured from extension of building line or established stop line. Add 4.5 m where buses make a right turn.

[3]Add 9.0 m where right turn volume is high for other vehicles.

MINIMUM BUS ZONE DIMENSIONS

Figure 1060-5
(Metric)

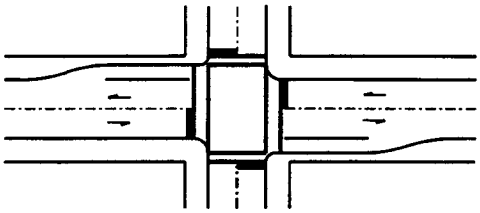

A. Far-side

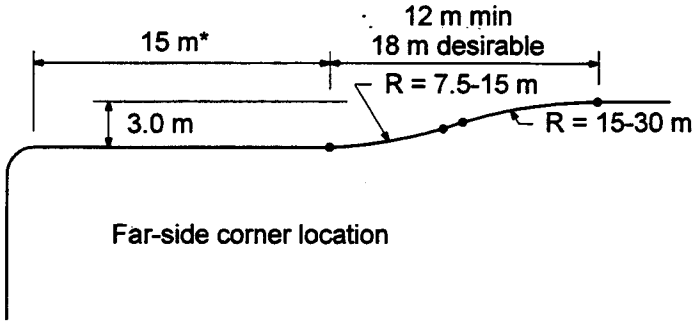

Far-side corner location

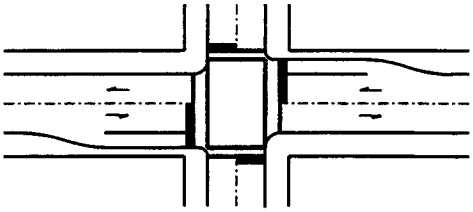

B. Near-side

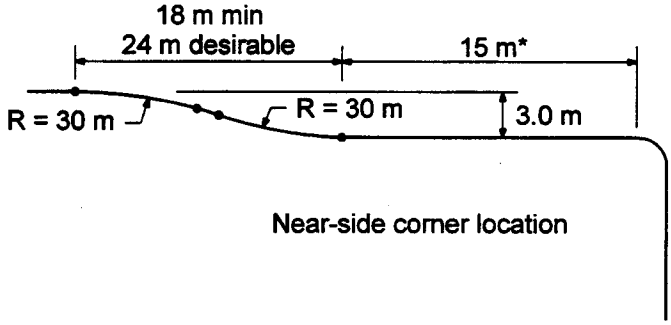

Near-side corner location

See Chapter 910 for right turn lane design.

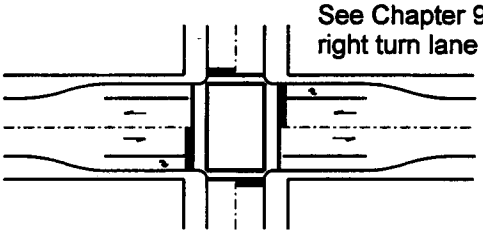

C. Near-side right turn lane and far-side bus bays

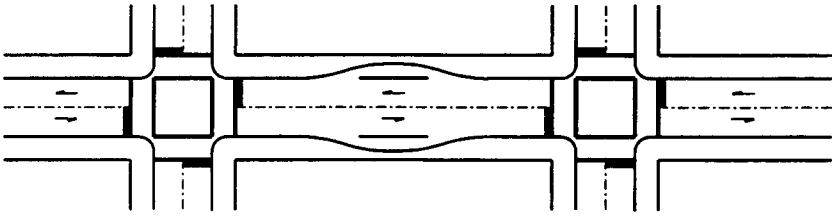

D. Mid-block bus bays

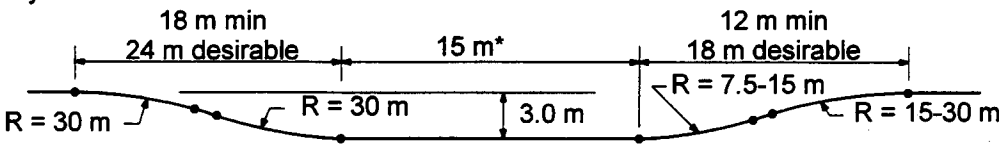

Mid-block location

* 15 m Bay is for one standard 12 m bus.
Add 13.5 m for each additional standard bus.
Articulated buses require 21 m bays, with
19.5 m for each additional.

Bus Stop Pullouts, Arterial Streets

Figure 1060-6

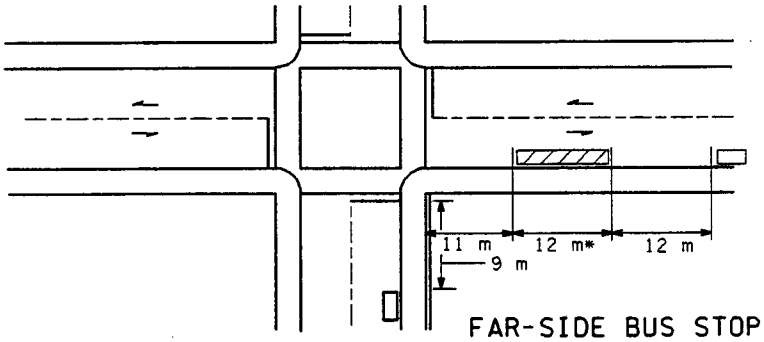

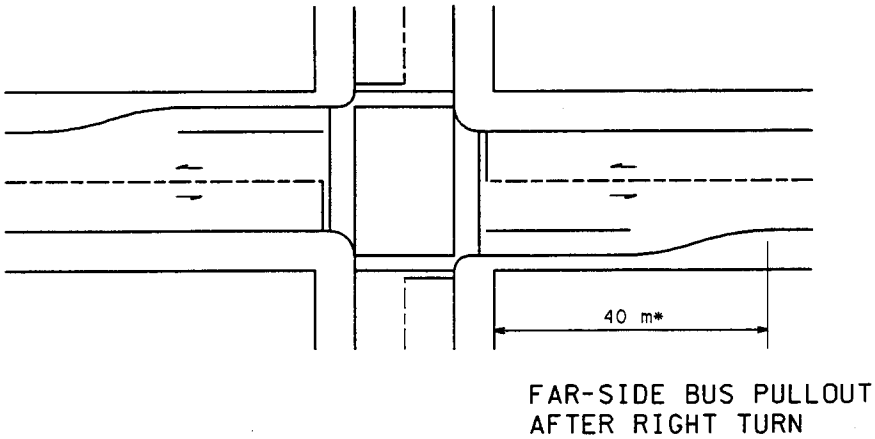

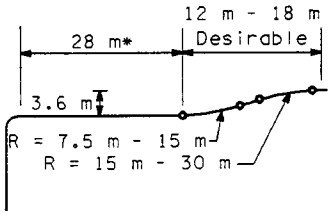

Bus Parked car

* Based on a standard 12 m bus. Add 6 m for articulated buses.

MINIMUM BUS ZONE AND PULLOUT AFTER RIGHT TURN DIMENSIONS

Figure 1060-7
(Metric)

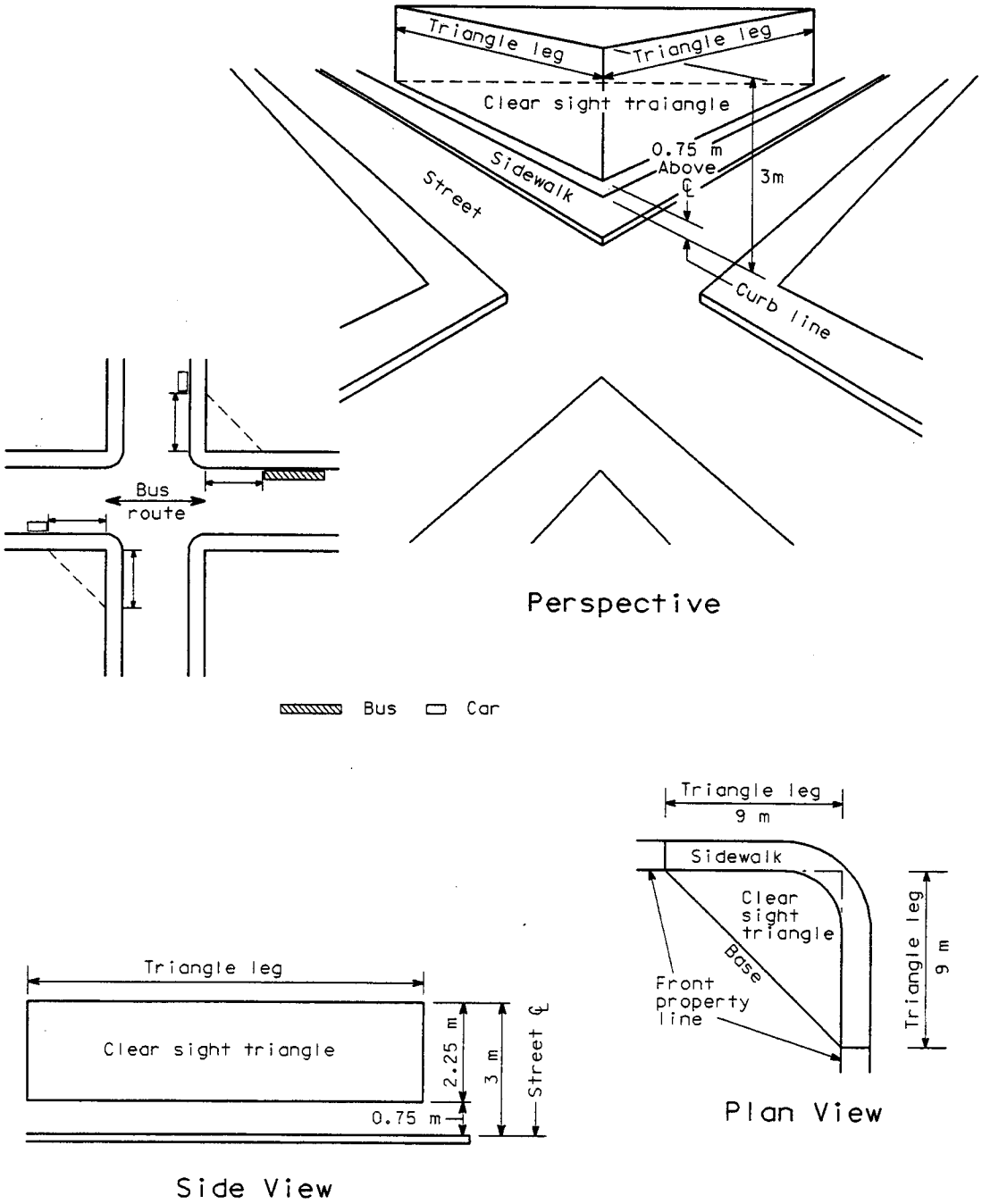

SHELTER SITING

Figure 1060-8
(Metric)

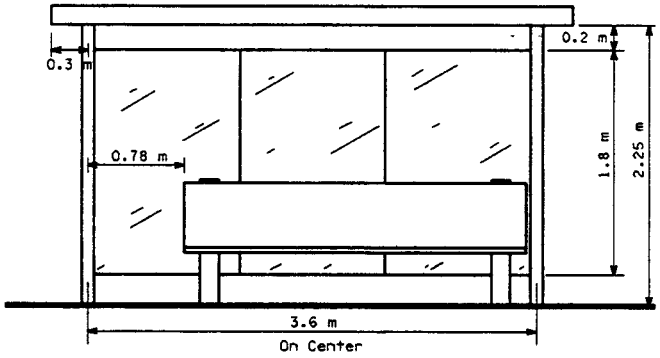

Front View

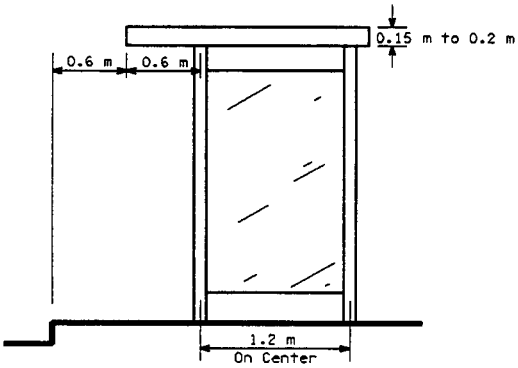

Side View

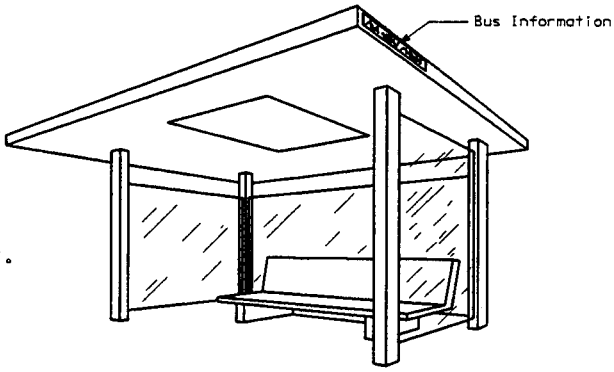

Note: Bench style can vary.

TYPICAL BUS SHELTER DESIGN

Figure 1060-9
(Metric)

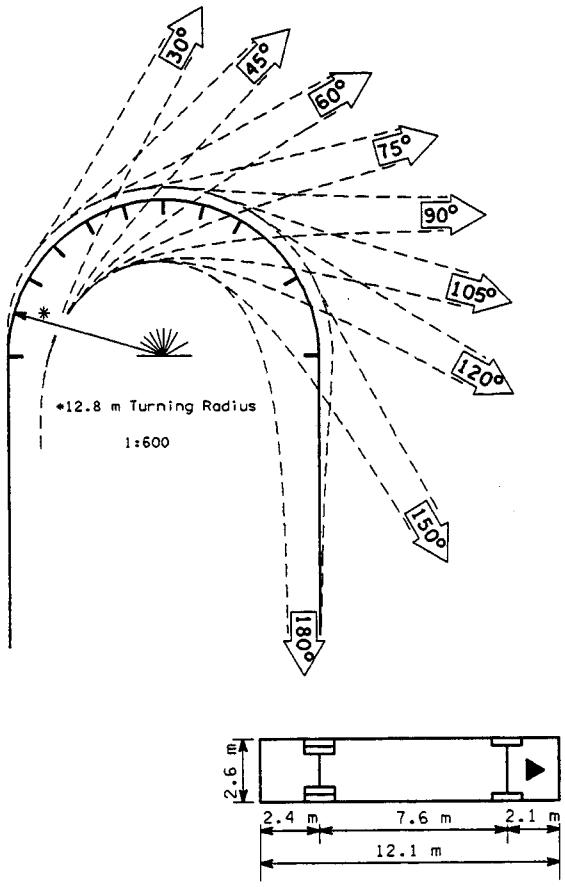

Design Vehicle Turning Movements

Figure 1060-10
(Metric)

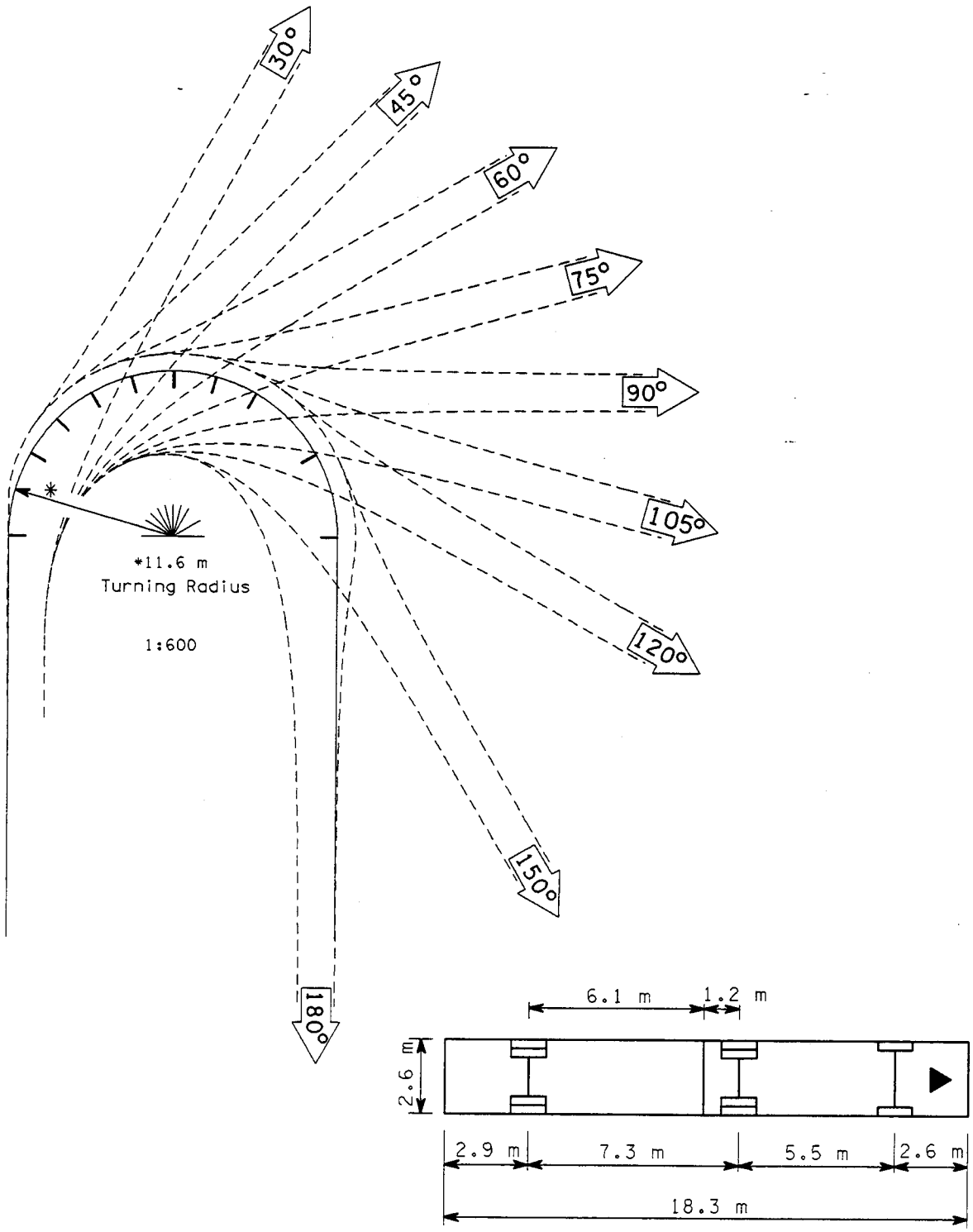

Turning Template for Articulated Bus

Figure 1060-11
(Metric)

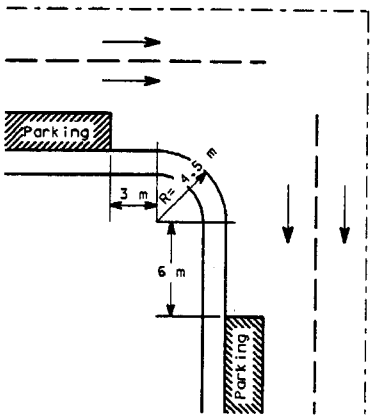

On Street Parking Before and After Turn

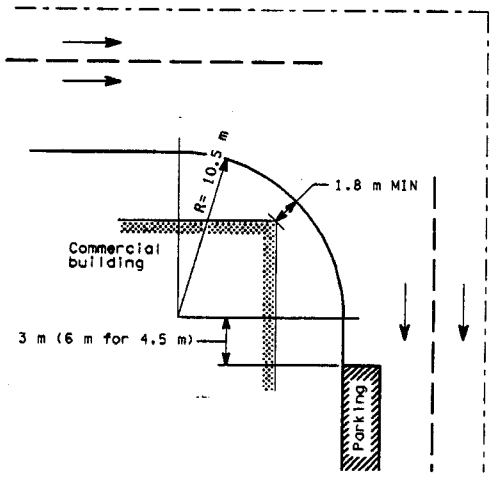

On Street Parking After Turn

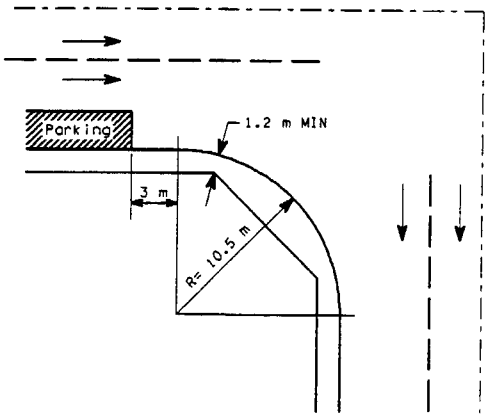

On Street Parking Before Turn

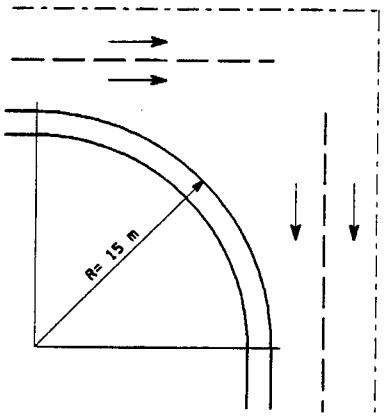

No On Street Parking

INTERSECTION DESIGN

Figure 1060-12
(Metric)

Design Vehicle	d (m) for Clases A and B Where:									
	R = 4.5 m		R = 6 m		R = 7.5 m		R = 9 m		R = 12 m	
	A	B	A	B	A	B	A	B	A	B
30°	6.6	5.1	5.7	5.1	5.7	5.1	5.7	5.1	5.4	5.1
60°	8.4	6.3	7.8	6.0	7.2	6.0	6.9	5.7	6.6	5.4
90°	11.4	6.9	9.9	6.6	9.0	6.6	7.5	6.3	6.3	5.4
120°	13.8	8.4	12.0	7.5	9.6	6.9	7.8	5.7	5.7	5.4
150°	14.4	8.4	12.0	7.5	9.6	6.9	6.6	5.4	5.1	4.8

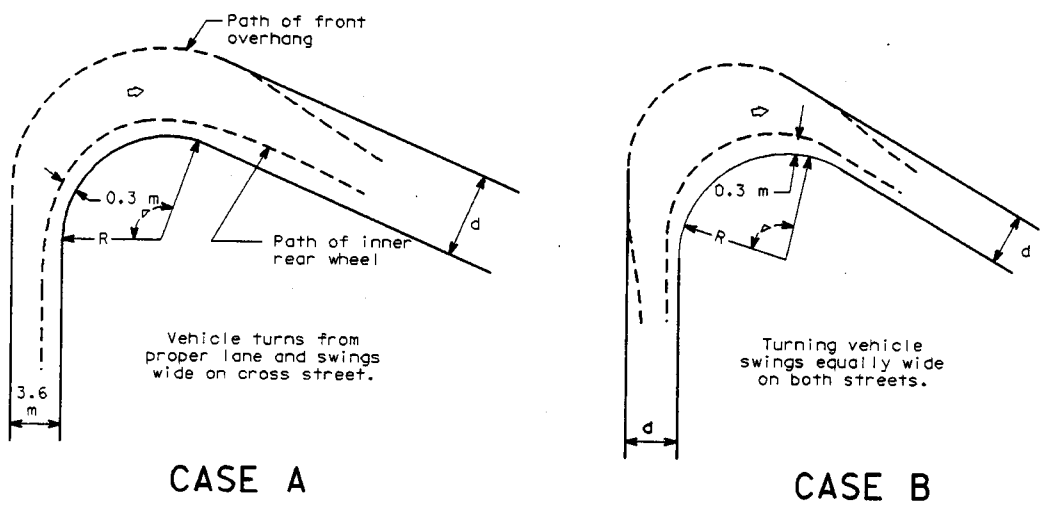

CROSS-STREET WIDTH OCCUPIED BY TURNING VEHICLE FOR VARIOUS ANGLES OF INTERSECTION AND CURB RADII

Figure 1060-13
(Metric)

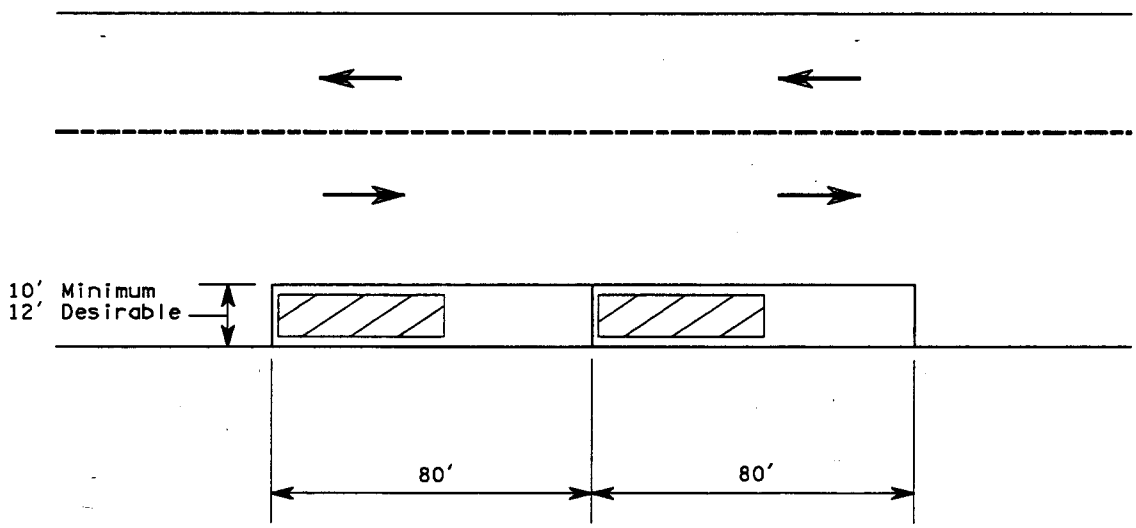

Parallel Design

NOT TO SCALE

Bus

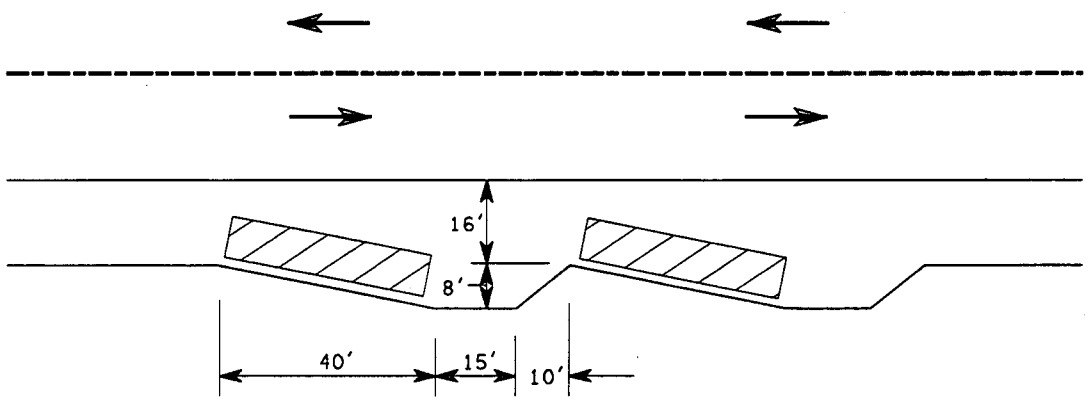

Sawtooth Design

BUS BERTH DESIGNS

Figure 1060-1

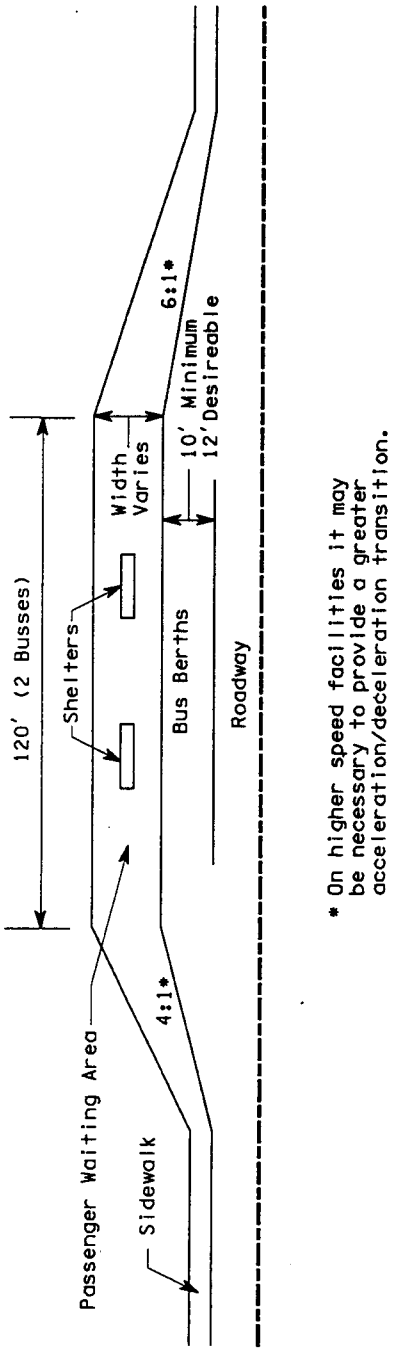

BUS TURNOUT TRANSFER CENTER

Figure 1060-3

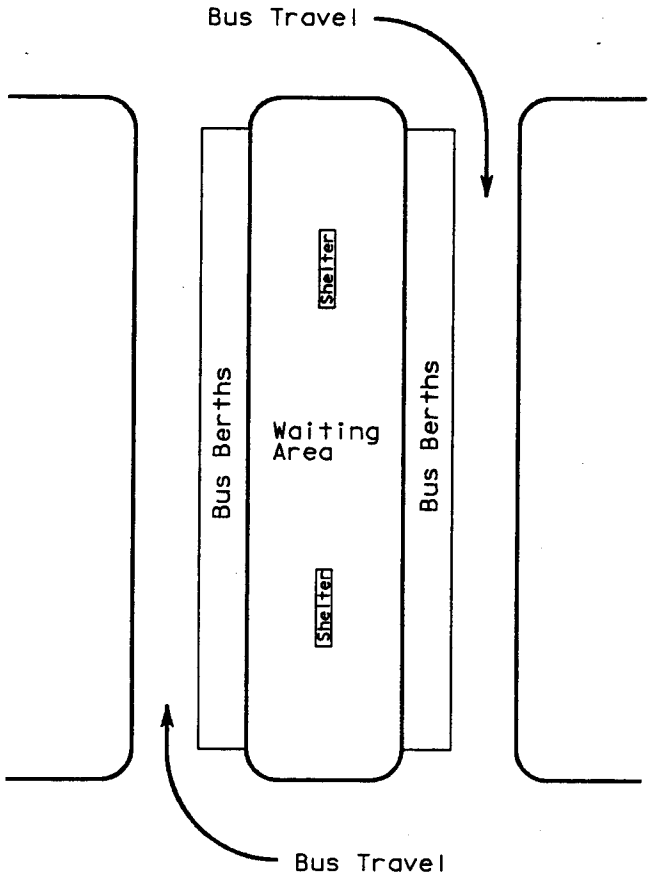

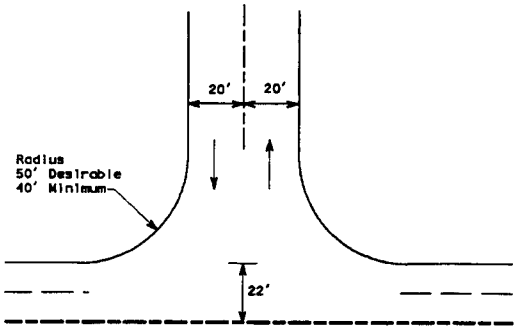

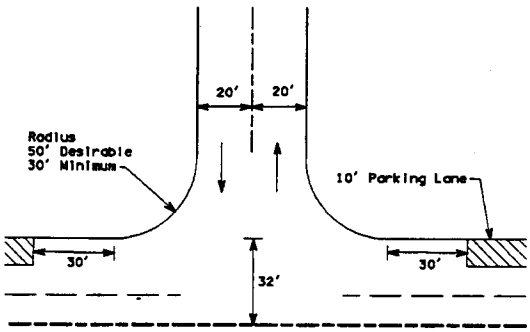

OFF-STREET TRANSFER CENTER

Figure 1060-4

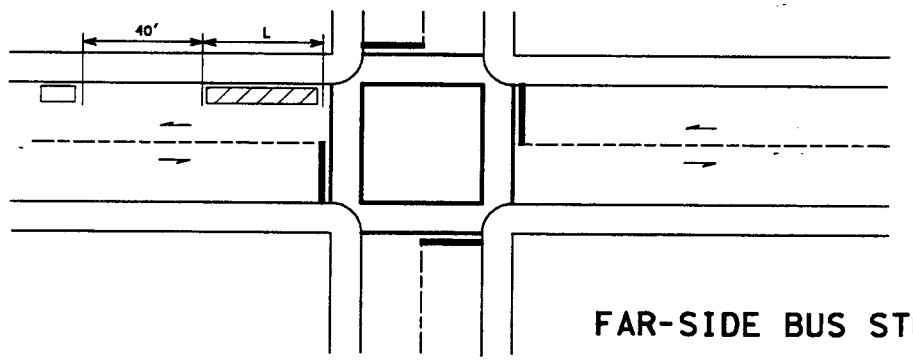

FAR-SIDE BUS STOP

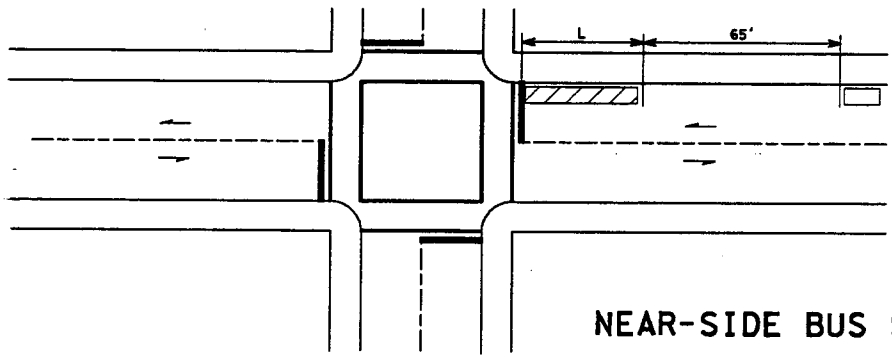

NEAR-SIDE BUS STOP

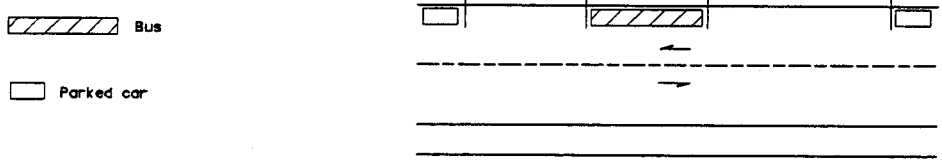

MIDBLOCK BUS STOP

Minimum Lengths for Bus Curb Loading Zones (L)[1]

	Loading Zone Length (feet)					
	One Bus Stop			Two Bus Stops		
Approx. Bus Length(L)	Near Side[2,3]	Far Side[2]	Mid Block	Near Side[2,3]	Far Side[2]	Mid Block
25	90	65	125	120	90	150
30	95	70	130	130	100	160
35	100	75	135	140	110	170
40	105	80	140	150	120	180
60	125	100	160	190	160	220

[1]Based on bus 1 foot from curb. When bus is 0.5 feet from curb, add 20 feet near side, 15 feet far side, and 20 feet midblock. Based on streets 40 feet wide, add 15 feet when 35 feet wide and 30 feet when 32 feet wide.

[2]Measured from extension of building line or established stop line. Add 15 feet where buses make a right turn.

[3]Add 30 feet where right turn volume is high for other vehicles.

MINIMUM BUS ZONE DIMENSIONS

Figure 1060-5

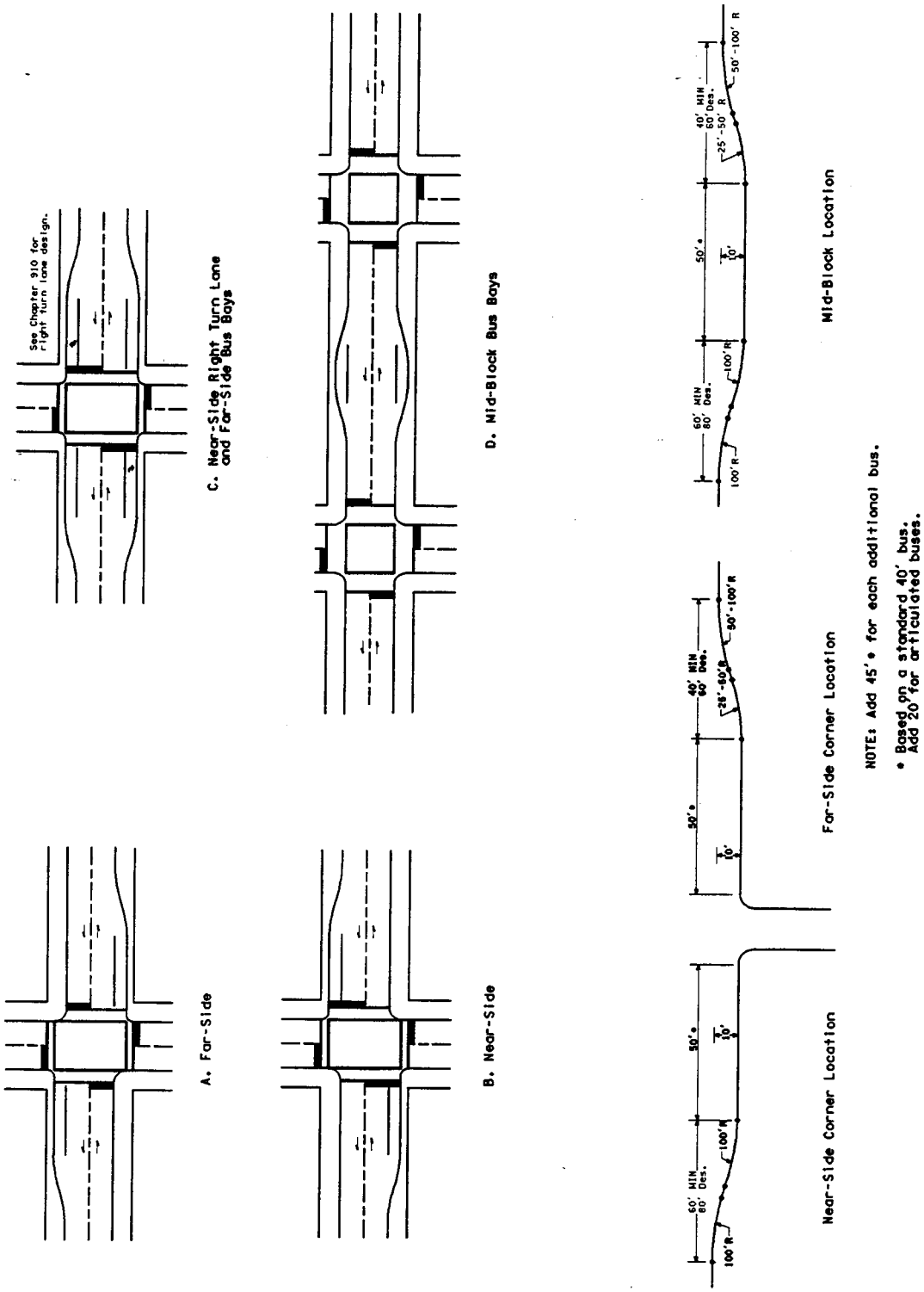

BUS STOP PULLOUTS, ARTERIAL STREETS

Figure 1060-6

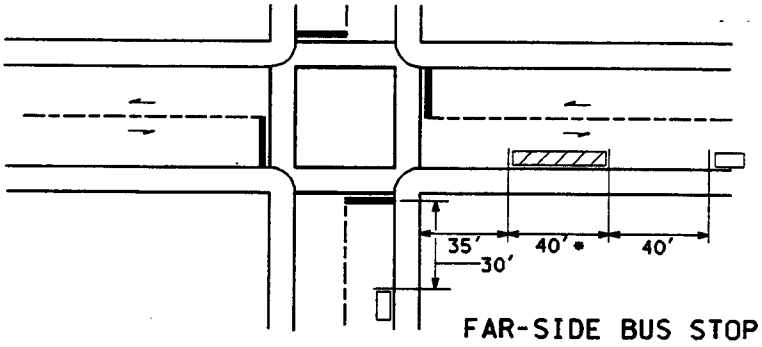

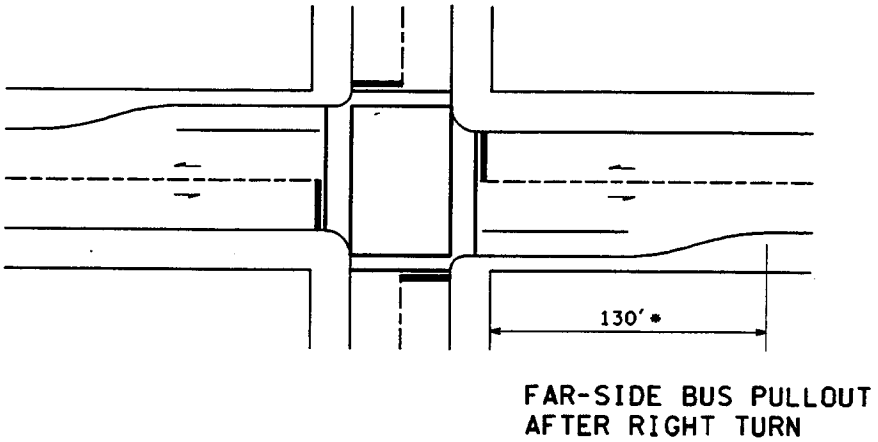

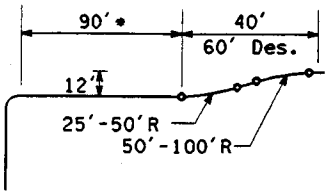

Bus Parked Car

* Based on a standard 40' bus. Add 20' for articulated buses.

MINIMUM BUS ZONE AND PULLOUT AFTER RIGHT TURN DIMENSIONS

Figure 1060-7

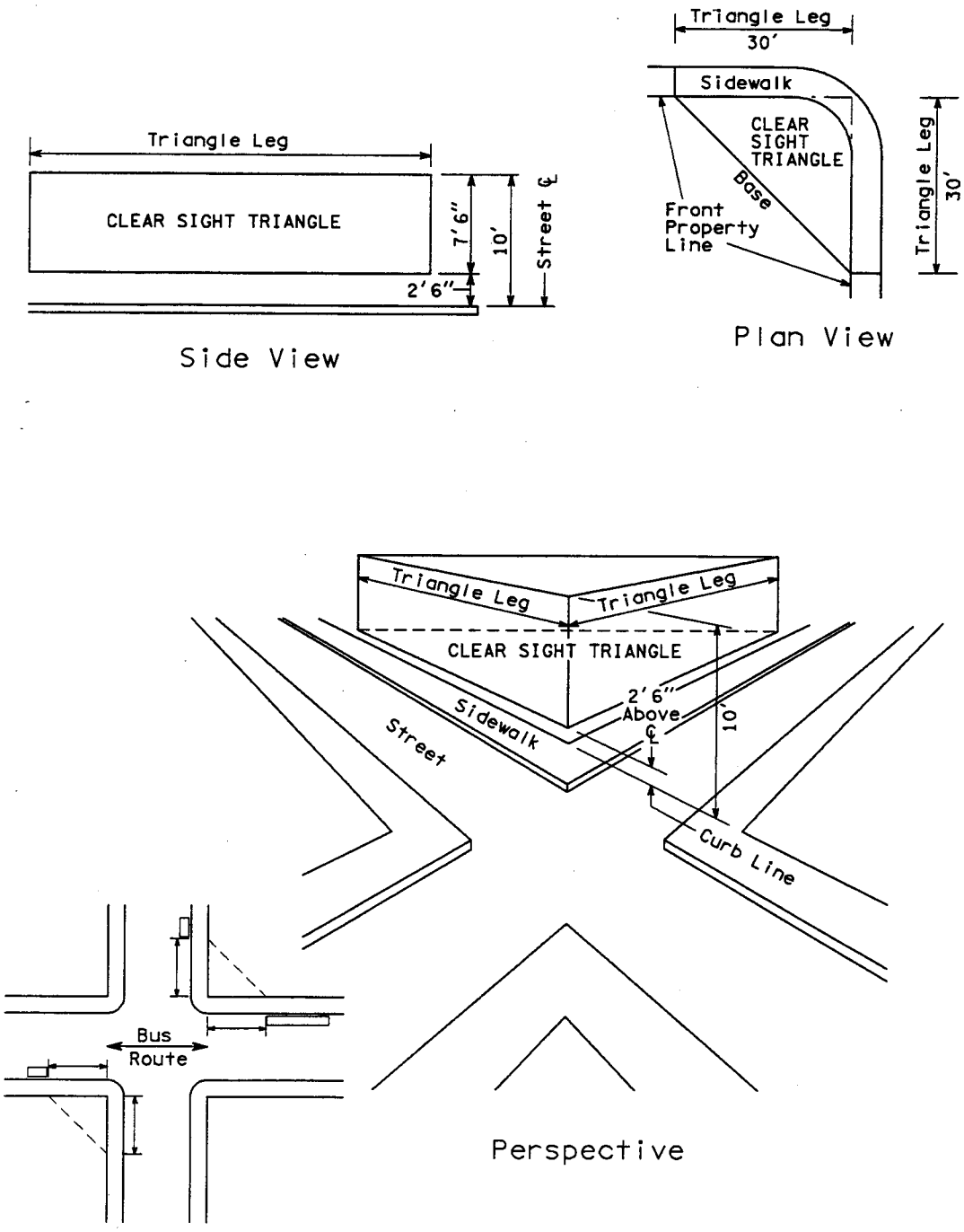

SHELTER SITING

Figure 1060-8

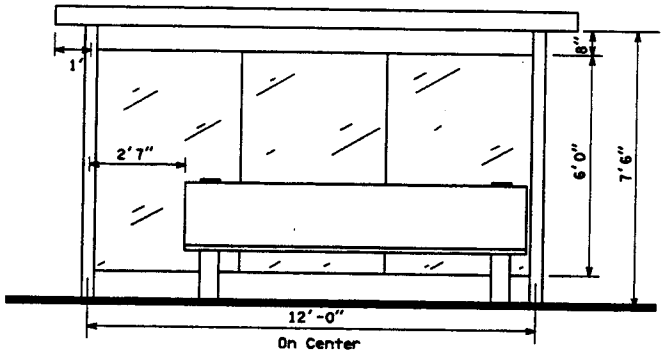

Front View

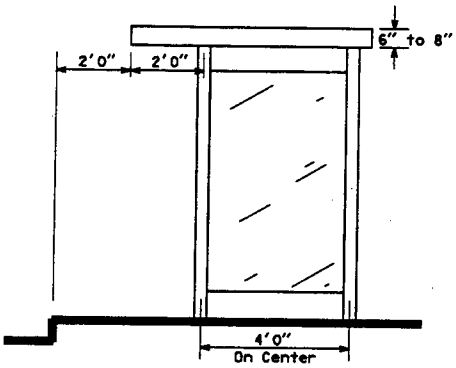

Side View

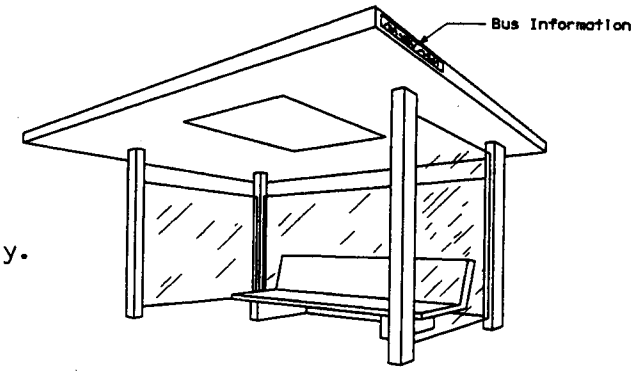

Note: Bench style can vary.

TYPICAL BUS SHELTER DESIGN

Figure 1060-9

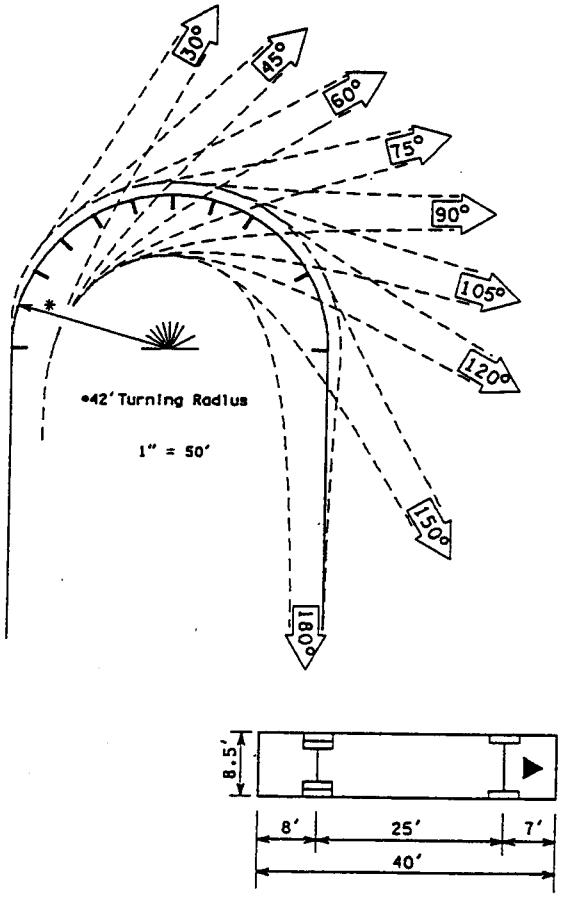

Design Vehicle Turning Movements
Figure 1060-10

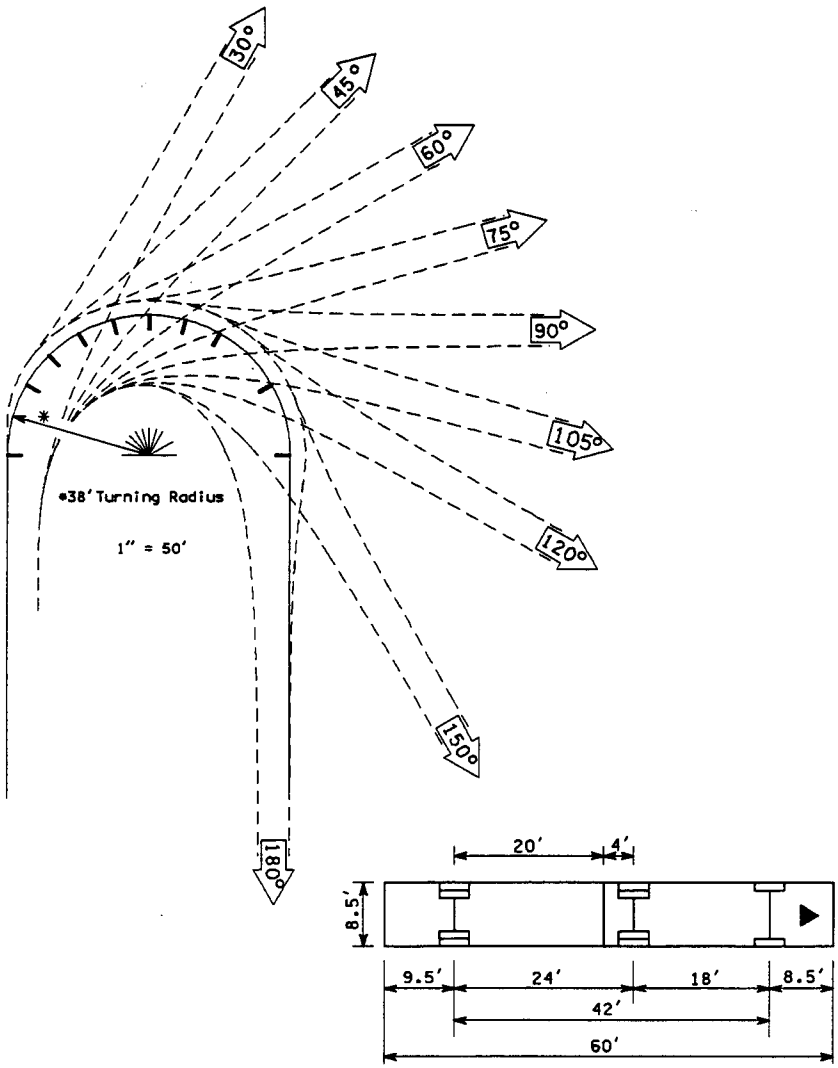

Turning Template for Articulated Bus
Figure 1060-11

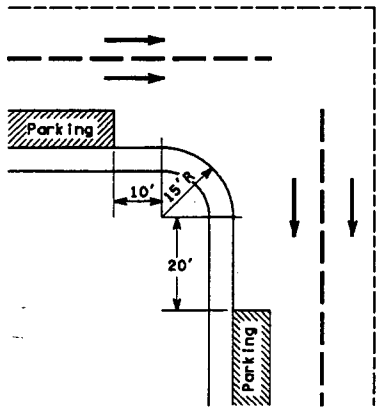

On Street Parking Before and After Turn

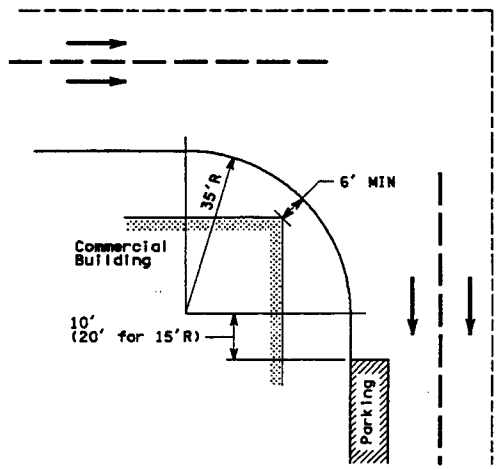

On Street Parking After Turn

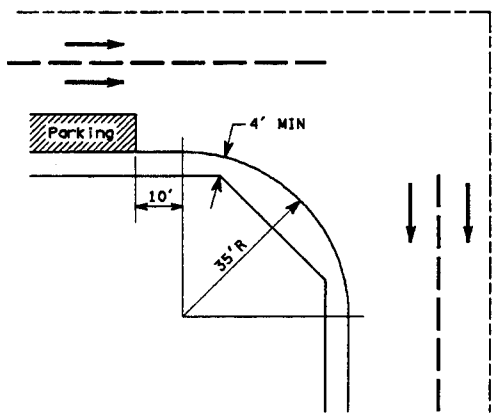

On Street Parking Before Turn

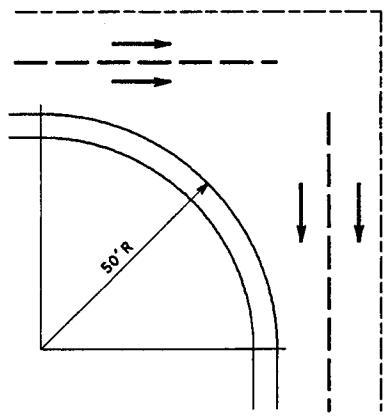

No On Street Parking

INTERSECTION DESIGN

Figure 1060-12

d_2 (ft) for Cases A and B Where:

Design Vehicle	R=15′		R=20′		R=25′		R=30′		R=40′	
	A	B	A	B	A	B	A	B	A	B
30°	22	17	19	17	19	17	19	17	18	17
60°	28	21	26	20	24	20	23	19	22	18
90°	38	23	33	22	30	22	25	21	21	18
120°	46	28	40	25	32	23	26	19	19	18
150°	48	28	40	25	32	23	22	18	17	16

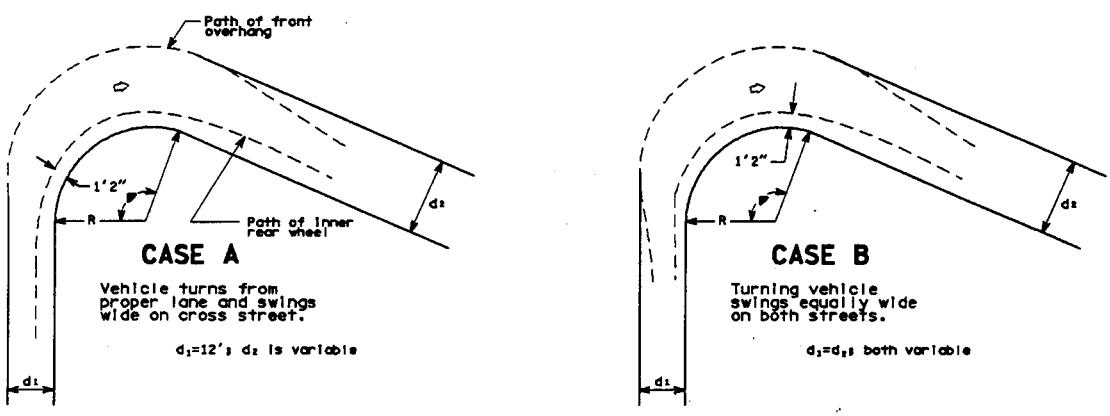

CROSS-STREET WIDTH OCCUPIED BY TURNING VEHICLE FOR VARIOUS ANGLES OF INTERSECTION AND CURB RADII

Figure 1060-13