Washington State Department of Transportation

Publications Transmittal

Transmittal Number	Date
PT 03-074	December 2003
Publication Distribution	
To: All English *Design Manual* holders	
Publication Title	Publication Number
Design Manual (English) Revision 2003-2	M 22-01
Originating Organization	
Environmental and Engineering Service Center, Design Office, Design Policy, Standards, and Safety Research Unit through Engineering Publications	

Remarks and Instructions

Remarks:
Additional copies may be purchased from:
Washington State Department of Transportation
Finance and Administration
Directional Documents and Engineering Publications
PO BOX 47408
Olympia, WA 98504-7408

Phone: (360) 705-7430
Fax: (360) 705-6861
E-mail: engrpubs@wsdot.wa.gov

Instructions:

Page numbers and corresponding sheet-counts are given in the table below to indicate portions of the *Design Manual* that are to be removed and inserted to accomplish this revision.

Chapter	Remove		Insert	
	Pages	Sheets	Pages	Sheets
Letter's List	N/A	N/A	N/A	1
Contents	1 – 24	12	1 – 23	12
325, "Design Matrix Procedures"	1 - 15	8	1 – 15	8
330, "Design Documentation, Approval, and Process Review"	1 - 14	7	1 – 16	8
430, "Modified Design Level"	1 - 2	1	1 – 2	1
710, "Traffic Barriers"	1 - 24	12	1 – 25	13
810, "Work Zone Traffic Control"	1 - 20	10	1 – 20	10
840, "Illumination"	1 – 24	12	1 – 16	8
920, "Road Approaches"	1 - 9	5	1 – 8	4
1030, "Safety Rest Areas and Traveler Services"	1 - 5	3	1 – 4	2
1110, "Site Data for Structures"	1 – 5	3	1 – 5	3
1310, "Contour Grading"	1 – 2	1	1 – 2	1
1330, "Irrigation"	1	1	1	1

Chapter	Remove		Insert	
	Pages	Sheets	Pages	Sheets
1350, “Soil Bioengineering”	1 – 4	2	1 – 3	2
1420, “Access Control Design Policy**”** 1420, “Access Control” **(new title)**	1 - 21	11	1 – 6	3
1430, “Development of Access Control” 1430, “Limited Access” **(new title)**	1 - 5	3	1 – 22	11
1435, “Managed Access” **NEW**	--	--	1 – 14	7
1460, “Fencing”	1 – 4	2	1 – 3	2
DM Supplement, “Urban Roadways”	N/A	N/A	1 – 16	8
Index	1 – 18	9	1 – 18	9

Distributed By	Phone Number	Signature
Directional Documents and Engineering Publications	(360) 705-7430 FAX: 705-6861	

Washington State Department of Transportation

Design Manual Supplements and Instructional Letters

December 2003

In Effect	Chapter	Date	Type	Subject/Title
Yes No No	HOV* 940 1050	9/28/99	DM Supplement	Left-Side HOV Direct Access Connections (Chapter 940 revised September 2002) (Chapter 1050 revised May 2003)
Yes No	HOV* 1050	05/03/00	DM Supplement	Left-Side HOV Parallel On-Connection (Chapter 1050 revised May 2003)
No **No**	700 **710**	Revised 11/15/01 **08/01/01**	 **DM Supplement**	(Chapter 700 revised May 2003) **Median Barrier Guidelines**
Yes	650	10/09/02	DM Supplement	Stopping Sight Distance
Yes Yes No **No** **No**	440 640 700 **325** **330**	5/5/2003 **5/5/2003**	Instructional Letter 4053.00 **Instructional** **Letter 4053.00**	Jurisdiction Over State Highways Within Cities (Chapter 700 revised May 2003) **Jurisdiction Over State Highways Within Cities**
Yes **Yes** **Yes**	**430** **440** **640**	**7/22/2003**	**DM Supplement**	**Urban Roadways**

* The *HOV Direct Access Design Guide*, Draft M 22-98

Notes:

- Changes since the last revision to the *Design Manual* are shown in bold print.
- Items with **No** in the **In Effect** column were superseded by the latest revision and will be dropped from the next printing of this list.
- The listed items marked *yes* have been posted to the web at the following location:

http://www.wsdot.wa.gov/fasc/engineeringpublications/DesignLettersMemInstruction.htm

Contents

			Date
Division 1 General Information			
Chapter 120	Planning		May 2000
	120.01	General	
	120.02	References	
	120.03	Definitions	
	120.04	Legislation and Policy Development	
	120.05	Planning at WSDOT	
	120.06	Linking Transportation Plans	
	120.07	Linking WSDOT Planning to Programming	
Chapter 140	Managing Project Delivery		September 2002
	140.01	General	
	140.02	References	
	140.03	Definitions	
	140.04	Resources	
	140.05	Process and Tools	
	140.06	Responsibilities	
	140.07	Documentation	
Division 2 Hearings, Environmental, and Permits			
Chapter 210	Public Involvement and Hearings		December 1998
	210.01	General	
	210.02	References	
	210.03	Definitions	
	210.04	Public Involvement	
	210.05	Hearings	
	210.06	Environmental Hearing	
	210.07	Corridor Hearing	
	210.08	Design Hearing	
	210.09	Access Hearing	
	210.10	Combined Hearings	
	210.11	Administrative Appeal Hearing	
	210.12	Documentation	
Chapter 220	Project Environmental Documentation		June 1989
	220.01	General	
	220.02	Definitions	
	220.03	Project Classification	
	220.04	Class I, EIS	
	220.05	Class II, CE	
	220.06	Class III, EA/Checklist	
	220.07	Project Reevaluation	
	220.08	Project Reviews	

Date

Chapter 240 Permits and Approvals From Other Governmental Agencies September 1990
240.01 General (240-13 and 14 June 1989)
240.02 United States Department of the Army-Corps of Engineers
240.03 United States Coast Guard
240.04 United States Forest Service (USFS)
240.05 Federal Aviation Administration (FAA)
240.06 FHWA — Western Federal Lands Highway Division (WFLHD)
240.07 Federal Energy Regulatory Commission
240.08 Environmental Protection Agency
240.09 Washington State Departments of Fisheries and Wildlife
240.10 Washington State Department of Ecology (DOE)
240.11 Washington State Department of Natural Resources (DNR)
240.12 Washington State Department of Labor and Industries
240.13 Local Agencies
240.14 Utility Agreements

Division 3 Project Documentation

Chapter 315 Value Engineering August 1998
315.01 General
315.02 References
315.03 Definitions
315.04 Procedure
315.05 Documentation

Chapter 325 Design Matrix Procedures December 2003
325.01 General
325.02 Selecting a Design Matrix
325.03 Using a Design Matrix

Chapter 330 Design Documentation, Approval, and Process Review December 2003
330.01 General
330.02 References
330.03 Definitions
330.04 Design Documentation
330.05 Project Development
330.06 Scoping Phase
330.07 FHWA Approval
330.08 Design Approval
330.09 Process Review

Chapter 340 Minor Operational Enhancement Projects September 2002
340.01 General
340.02 References
340.03 Definitions
340.04 Minor Operational Enhancement Matrix Procedures
340.05 Selecting a Minor Operational Enhancement Matrix
340.06 Project Type
340.07 Using a Minor Operational Enhancement Matrix

			Date
	340.08	Project Approval	
	340.09	Documentation	

Division 4 Project Design Criteria

Chapter 410	Basic Design Level		May 2001
	410.01	General	(410-2 February 2002)
	410.02	Required Basic Safety Items of Work	
	410.03	Minor Safety and Minor Preservation Work	
Chapter 430	Modified Design Level		May 2001
	430.01	General	(430-1 December 2003)
	430.02	Design Speed	(430-10 February 2002)
	430.03	Roadway Widths	
	430.04	Ramp Lane Widths	
	430.05	Stopping Sight Distance	
	430.06	Profile Grades	
	430.07	Cross Slope	
	430.08	Fill Slopes and Ditch Inslopes	
	430.09	Intersections	
	430.10	Bridges	
	430.11	Documentation	
Chapter 440	Full Design Level		May 2001
	440.01	General	
	440.02	References	
	440.03	Definitions	
	440.04	Functional Classification	
	440.05	Terrain Classification	
	440.06	Geometric Design Data	
	440.07	Design Speed	
	440.08	Traffic Lanes	
	440.09	Shoulders	
	440.10	Medians	
	440.11	Curbs	
	440.12	Parking	
	440.13	Pavement Type	
	440.14	Structure Width	
	440.15	Grades	

Division 5 Soils and Paving

Chapter 510	Investigation of Soils, Rock, and Surfacing Materials		November 1999
	510.01	General	
	510.02	References	
	510.03	Materials Sources	
	510.04	Geotechnical Investigation, Design, and Reporting	
	510.05	Use of Geotechnical Consultants	
	510.06	Geotechnical Work by Others	
	510.07	Surfacing Report	
	510.08	Documentation	

			Date
Chapter 520	Design of Pavement Structure		February 2002
	520.01	Introduction	(520-7 through 14 April 1998)
	520.02	Estimating Tables	
Chapter 530	Geosynthetics		April 1998
	530.01	General	(530-13 November 1999)
	530.02	References	
	530.03	Geosynthetic Types and Characteristics	
	530.04	Geosynthetic Function Definitions and Applications	
	530.05	Design Approach for Geosynthetics	
	530.06	Design Responsibility	
	530.07	Documentation	

Division 6 Geometrics

Chapter 610	Highway Capacity		June 1989
	610.01	General	
	610.02	Definitions and Symbols	
	610.03	Design	
Chapter 620	Geometric Plan Elements		April 1998
	620.01	General	(620-1 May 2001)
	620.02	References	(620-4 November 1999)
	620.03	Definitions	
	620.04	Horizontal Alignment	
	620.05	Distribution Facilities	
	620.06	Number of Lanes and Arrangement	
	620.07	Pavement Transitions	
	620.08	Procedures	
	620.09	Documentation	
Chapter 630	Geometric Profile Elements		April 1998
	630.01	General	(630-2 May 2001)
	630.02	References	
	630.03	Vertical Alignment	
	630.04	Coordination of Vertical and Horizontal Alignments	
	630.05	Airport Clearance	
	630.06	Railroad Crossings	
	630.07	Procedures	
	630.08	Documentation	
Chapter 640	Geometric Cross Section		February 2002
	640.01	General	
	640.02	References	
	640.03	Definitions	
	640.04	Roadways	
	640.05	Superelevation	
	640.06	Medians and Outer Separations	
	640.07	Roadsides	
	640.08	Roadway Sections	
	640.09	Documentation	

			Date
Chapter 650	Sight Distance		April 1998
	650.01	General	(650-3 June 1999)
	650.02	References	(650-4 November 1999)
	650.03	Definitions	(650-8 May 2000)
	650.04	Passing Sight Distance	(650-9 May 2001)
	650.05	Stopping Sight Distance	
	650.06	Decision Sight Distance	

Division 7 Roadside Safety Elements

Chapter 700	Roadside Safety		May 2003
	700.01	General	
	700.02	References	
	700.03	Definitions	
	700.04	Clear Zone	
	700.05	Hazards to be Considered for Mitigation	
	700.06	Median Considerations	
	700.07	Other Roadside Safety Features	
	700.08	Documentation	
Chapter 710	Traffic Barriers		December 2003
	710.01	General	
	710.02	References	
	710.03	Definitions	
	710.04	Project Requirements	
	710.05	Barrier Design	
	710.06	Beam Guardrail	
	710.07	Cable Barrier	
	710.08	Concrete Barrier	
	710.09	Special Use Barriers	
	710.10	Bridge Rails	
	710.11	Other Barriers	
	710.12	Documentation	
Chapter 720	Impact Attenuator Systems		September 2002
	720.01	Impact Attenuator Systems	
	720.02	Design Criteria	
	720.03	Selection	
	720.04	Documentation	

Division 8 Traffic Safety Elements

Chapter 810	Work Zone Traffic Control		December 2003
	810.01	General	
	810.02	References	
	810.03	Public Information	
	810.04	Work Zone Classification	
	810.05	Work Zone Types	
	810.06	Project Definition	
	810.07	Work Zone Safety	
	810.08	Regulatory Traffic Control Strategies	

			Date
	810.09	Traffic Control Plans and Devices	
	810.10	Documentation	
Chapter 820	Signing		November 1999
	820.01	General	
	820.02	References	
	820.03	Design Components	
	820.04	Overhead Installation	
	820.05	Mileposts	
	820.06	Guide Sign Plan	
	820.07	Documentation	
Chapter 830	Delineation		May 2000
	830.01	General	
	830.02	References	
	830.03	Pavement Markings	
	830.04	Guide Posts	
	830.05	Barrier Delineation	
	830.06	Wildlife Warning Reflectors	
	830.07	Documentation	
Chapter 840	Illumination		December 2003
	840.01	General	
	840.02	References	
	840.03	Definitions	
	840.04	Required Illumination	
	840.05	Additional Illumination	
	840.06	Design Criteria	
	840.07	Documentation	
Chapter 850	Traffic Control Signals		May 2001
	850.01	General	
	850.02	References	
	850.03	Definitions	
	850.04	Procedures	
	850.05	Signal Warrants	
	850.06	Conventional Traffic Signal Design	
	850.07	Documentation	
Chapter 860	Intelligent Transportation Systems		November 1999
	860.01	General	
	860.02	References	
	860.03	Traffic Data Collection	
	860.04	Traffic Flow Control	
	860.05	Motorist Information	
	860.06	Documentation	

Division 9 Interchanges and Intersections

Chapter 910	Intersections At Grade			May 2001
	910.01	General	(910-1 through 3, 8, 10, 13	February 2002)
	910.02	References	(910-23 through 25, 29, 30	February 2002)
	910.03	Definitions		
	910.04	Design Considerations		
	910.05	Design Vehicle		
	910.06	Right-Turn Corners		
	910.07	Channelization		
	910.08	Roundabouts		
	910.09	U-Turns		
	910.10	Sight Distance at Intersections		
	910.11	Traffic Control at Intersections		
	910.12	Interchange Ramp Terminals		
	910.13	Procedures		
	910.14	Documentation		
Chapter 915	Roundabouts			February 2002
	915.01	General		
	915.02	References		
	915.03	Definitions		
	915.04	Roundabout Categories		
	915.05	Capacity Analysis		
	915.06	Geometric Design		
	915.07	Pedestrians		
	915.08	Bicycles		
	915.09	Signing and Pavement Marking		
	915.10	Illumination		
	915.11	Access, Parking, and Transit Facilities		
	915.12	Procedures		
	915.13	Documentation		
Chapter 920	Road Approaches			December 2003
	920.01	General		
	920.02	References		
	920.03	Definitions		
	920.04	Design Considerations		
	920.05	Road Approach Design Template		
	920.06	Sight Distance		
	920.07	Road Approach Location		
	920.08	Drainage Requirements		
	920.09	Procedures		
	920.10	Documentation		
Chapter 930	Railroad Grade Crossings			June 1989
	930.01	General	(930-4, 6 through 12	March 1994)
	930.02	References		
	930.03	Plans		
	930.04	Traffic Control Systems		
	930.05	Stopping Lanes		

			Date
	930.06	Types of Crossing Surfaces	
	930.07	Crossing Closure	
	930.08	Traffic Controls During Construction and Maintenance	
	930.09	Railroad Grade Crossing Orders	
	930.10	Longitudinal Easements From Railroad	
Chapter 940	Traffic Interchanges		September 2002
	940.01	General	
	940.02	References	
	940.03	Definitions	
	940.04	Interchange Design	
	940.05	Ramps	
	940.06	Interchange Connections	
	940.07	Ramp Terminal Intersections at Crossroads	
	940.08	Interchanges on Two-Lane Highways	
	940.09	Interchange Plans	
	940.10	Documentation	
Chapter 960	Median Crossovers		August 1997
	960.01	General	
	960.02	Analysis	
	960.03	Design	
	960.04	Approval	
	960.05	Documentation	

Division 10 Auxiliary Facilities

Chapter 1010	Auxiliary Lanes		November 1999
	1010.01	General	(1010-2 and 8 May 2001)
	1010.02	References	
	1010.03	Definitions	
	1010.04	Climbing Lanes	
	1010.05	Passing Lanes	
	1010.06	Slow Moving Vehicle Turnouts	
	1010.07	Shoulder Driving for Slow Vehicles	
	1010.08	Emergency Escape Ramps	
	1010.09	Chain-Up Area	
	1010.10	Documentation	
Chapter 1020	Bicycle Facilities		May 2001
	1020.01	General	(1020-25 and 26 September 2002)
	1020.02	References	
	1020.03	Definitions	
	1020.04	Planning	
	1020.05	Design	
	1020.06	Documentation	
Chapter 1025	Pedestrian Design Considerations		May 2001
	1025.01	General	
	1025.02	References	
	1025.03	Definitions	
	1025.04	Policy	

			Date
	1025.05	Pedestrian Human Factors	
	1025.06	Pedestrian Activity Generators	
	1025.07	Pedestrian Facility Design	
	1025.08	Documentation	
Chapter 1030	Safety Rest Areas and Traveler Services		December 2003
	1030.01	General	
	1030.02	References	
	1030.03	Documentation	
Chapter 1040	Weigh Sites		May 2000
	1040.01	General	
	1040.02	Definitions	
	1040.03	Planning, Development, and Responsibilities	
	1040.04	Permanent Facilities	
	1040.05	Portable Facilities	
	1040.06	Shoulder Sites	
	1040.07	Federal Participation	
	1040.08	Procedures	
	1040.09	Documentation	
Chapter 1050	High Occupancy Vehicle Facilities		May 2003
	1050.01	General	
	1050.02	Definitions	
	1050.03	References	
	1050.04	Preliminary Design and Planning	
	1050.05	Operations	
	1050.06	Design Criteria	
	1050.07	Documentation	
Chapter 1060	Transit Benefit Facilities		December 1991
	1060.01	Introduction	(1060-14 March 1994)
	1060.02	Definitions	(1060-16 through 18 March 1994)
	1060.03	Park and Ride Lots	(1060-19 November 1997)
	1060.04	Transfer/Transit Centers	(1060-20 through 22 March 1994)
	1060.05	Bus Stops and Pullouts	(1060-23 and 24 July 1994)
	1060.06	Passenger Amenities	(1060-25 through 34 March 1994)
	1060.07	Roadway and Vehicle Design Criteria Characteristics	(1060-35 and 36 July 1994) (1060-37 and 38 March 1994)
	1060.08	Intersection Radii	
	1060.09	Disabled Accessibility	
	1060.10	References	

Division 11 Structures

Chapter 1110	Site Data for Structures		December 2003
	1110.01	General	
	1110.02	References	
	1110.03	Required Data for All Structures	
	1110.04	Additional Data for Waterway Crossings	
	1110.05	Additional Data for Grade Separations	

			Date
	1110.06	Additional Data for Widenings	
	1110.07	Documentation	
Chapter 1120	Bridges		September 2002
	1120.01	General	
	1120.02	References	
	1120.03	Bridge Location	
	1120.04	Bridge Site Design Elements	
	1120.05	Documentation	
Chapter 1130	Retaining Walls and Steep Reinforced Slopes		May 2003
	1130.01	References (1130-22 and 23	December 1998)
	1130.02	General (1130-30	December 1998)
	1130.03	Design Principles	
	1130.04	Design Requirements	
	1130.05	Guidelines for Wall/Slope Selection	
	1130.06	Design Responsibility and Process	
	1130.07	Documentation	
Chapter 1140	Noise Barriers		May 2003
	1140.01	General	
	1140.02	References	
	1140.03	Design	
	1140.04	Procedures	
	1140.05	Documentation	

Division 12 Hydraulics

Chapter 1210	Hydraulic Design		September 2002
	1210.01	General	
	1210.02	References	
	1210.03	Hydraulic Considerations	
	1210.04	Safety Considerations	
	1210.05	Design Responsibility	

Division 13 Roadside Development

Chapter 1300	Roadside Development		June 1999
	1300.01	General	
	1300.02	References	
	1300.03	*Roadside Classification Plan*	
	1300.04	*Roadside Manual*	
	1300.05	Design Requirements	
	1300.06	Documentation	
	1300.07	Design Recommendations	
Chapter 1310	Contour Grading		December 2003
	1310.01	General	
	1310.02	References	
	1310.03	Procedures	
	1310.04	Recommendations	
	1310.05	Documentation	

			Date
Chapter 1320	Vegetation		June 1999
	1320.01	General	
	1320.02	References	
	1320.03	Discussion	
	1320.04	Recommendations	
	1320.05	Design Guidelines	
	1320.06	Documentation	
Chapter 1330	Irrigation		December 2003
	1330.01	General	
	1330.02	References	
	1330.03	Design Considerations	
	1330.04	Documentation	
Chapter 1350	Soil Bioengineering		December 2003
	1350.01	General	
	1350.02	References	
	1350.03	Uses	
	1350.04	Design Responsibilities and Considerations	
	1350.05	Documentation	

Division 14 Right of Way and Access Control

Chapter 1410	Right of Way Considerations		June 1999
	1410.01	General	
	1410.02	References	
	1410.03	Special Features	
	1410.04	Easements and Permits	
	1410.05	Programming for Funds	
	1410.06	Appraisal and Acquisition	
	1410.07	Transactions	
	1410.08	Documentation	
Chapter 1420	Access Control		December 2003
	1420.01	General	
	1420.02	References	
	1420.03	Definitions	
	1420.04	Vocabulary	
Chapter 1425	Access Point Decision Report		May 2000
	1425.01	General	
	1425.02	References	
	1425.03	Definitions	
	1425.04	Procedures	
	1425.05	Access Point Decision Report and Supporting Analyses	
	1425.06	Documentation	
Chapter 1430	Limited Access		December 2003
	1430.01	General	
	1430.02	Achieving Limited Access	
	1430.03	Full Control (Most Restrictive)	
	1430.04	Partial Control	
	1430.05	Modified Control (Least Restrictive)	

			Date
	1430.06	Access Approaches	
	1430.07	Frontage Roads	
	1430.08	Turnbacks	
	1430.09	Adjacent Railroads	
	1430.10	Modifications to Limited Access Highways	
	1430.11	Documentation	
Chapter 1435	Managed Access		December 2003
	1435.01	General	
	1435.02	Managed Access Classes	
	1435.03	Corner Clearance Criteria	
	1435.04	Access Connection Categories	
	1435.05	Access Connection Permit	
	1435.06	Permit Process	
	1435.07	Design Considerations	
	1435.08	Other Considerations	
	1435.09	Preconstruction Conference	
	1435.10	Adjudicative Proceedings	
	1435.11	Documentation	
Chapter 1440	Surveying and Mapping		June 1999
	1440.01	General	(1440-2 May 2001)
	1440.02	References	
	1440.03	Procedures	
	1440.04	Datums	
	1440.05	Global Positioning System	
	1440.06	WSDOT Monument Database	
	1440.07	Geographic Information System	
	1440.08	Photogrammetric Surveys	
	1440.09	Documentation	
Chapter 1450	Monumentation		May 2001
	1450.01	General	
	1450.02	References	
	1450.03	Definitions	
	1450.04	Control Monuments	
	1450.05	Alignment Monuments	
	1450.06	Property Corners	
	1450.07	Other Monuments	
	1450.08	Documentation	
	1450.09	Filing Requirements	
Chapter 1460	Fencing		December 2003
	1460.01	General	
	1460.02	References	
	1460.03	Design Criteria	
	1460.04	Fencing Types	
	1460.05	Gates	
	1460.06	Procedure	
	1460.07	Documentation	

Index December 2003

Figures

Figure Number	Title	Page	Last Date
120-1	Planning Organizations	120-3	May 2000
120-2	Transportation Plan Relationships	120-17	May 2000
120-3	RTIP, MTIP, and STIP Development Process	120-18	May 2000
120-4	Planning and Programming Links	120-19	May 2000
140-1	Overlapping Disciplines for Successful Project Delivery	140-1	September 2002
140-2	Project Management Trade-Off Triangle	140-1	September 2002
140-3	Relative Effort	140-3	September 2002
140-4	Managing Project Delivery Steps and Elements	140-4	September 2002
140-5	Risk Probability – Impact Matrix	140-9	September 2002
140-6	Change Management Form	140-15	September 2002
140-7a	Task Planning Worksheet	140-16	September 2002
140-7b	Task Planning Worksheet	140-17	September 2002
210-1	Sequence for a Hearing	210-16	December 1998
220-1	Environmental Process Flow Chart	220-14	June 1989
240-1a	Permits and Approvals	240-11	September 1990
240-1b	Permits and Approvals	240-12	September 1990
240-2	FAA Notice Requirement Related to Highways	240-13	June 1989
240-3	DNR Area Management Units	240-14	June 1989
315-1	Eight-Phase Job Plan for VE Studies	315-5	August 1998
315-2	Request for Value Engineering Study	315-6	August 1998
315-3	VE Study Team Tools	315-7	August 1998
325-1	Design Matrix Selection Guide	325-1	December 2003
325-2a	NHS Highways in Washington	325-9	December 2003
325-2b	NHS Highways in Washington	325-10	December 2003
325-3	Design Matrix I-Interstate Routes (Main Line)	325-11	December 2003
325-4	Design Matrix 2-Interstate Interchange Areas	325-12	December 2003
325-5	Design Matrix 3-Main Line NHS Routes (Except Interstate)	325-13	December 2003
325-6	Design Matrix 4-Interchange Areas, NHS (Except Interstate) and Non-NHS	325-14	December 2003
325-7	Design Matrix 5-Main Line Non-NHS Routes	325-15	December 2003
330-1	Design Matrix Documentation Requirements	330-5	December 2003
330-2a	Design Approval Level	330-10	December 2003
330-2b	Design Approval Level	330-11	December 2003
330-3a	Approvals	330-12	December 2003
330-3b	Approvals	330-13	December 2003
330-4	PS&E Process Approvals	330-14	December 2003
330-5	Common Components of Design Documentation Package	330-15	December 2003
330-6	Deviation and Evaluate Upgrade Request/Documentation Content List	330-16	December 2003
340-1	Minor Operational Enhancement Matrix Selection Guide	340-4	September 2002
340-2	Minor Operational Enhancement Matrix 1 Interstate & NHS Freeway Routes	340-7	September 2002

Figure Number	Title	Page	Last Date
340-3	Minor Operational Enhancement Matrix 2 NHS Nonfreeway Routes	340-8	September 2002
340-4	Minor Operational Enhancement Matrix 3 Non-NHS Routes	340-9	September 2002
340-5a	Q Project Design Summary/Approval Template	340-10	September 2002
340-5b	Q Project Design Summary/Approval Template	340-11	September 2002
430-1	Turning Ramp Lane Widths Modified Design Level	430-1	December 2003
430-2	Design Vehicles Modified Design Level	430-3	May 2001
430-3	Modified Design Level for Multilane Highways and Bridges	430-4	May 2001
430-4	Modified Design Level for Two-Lane Highways and Bridges	430-5	May 2001
430-5	Minimum Total Roadway Widths for Two-Lane Highway Curves — Modified Design Level	430-6	May 2001
430-6	Minimum Total Roadway Widths for Two-Lane Highway Curves, D<90º— Modified Design Level	430-7	May 2001
430-7	Evaluation for Stopping Sight Distance for Crest Vertical Curves — Modified Design Level	430-8	May 2001
430-8	Evaluation for Stopping Sight Distance for Horizontal Curves — Modified Design Level	430-9	May 2001
430-9	Main Line Roadway Sections — Modified Design Level	430-10	February 2002
430-10	Ramp Roadway Sections — Modified Design Level	430-11	May 2001
440-1	Desirable Design Speed	440-4	May 2001
440-2	Minimum Shoulder Width	440-5	May 2001
440-3	Shoulder Width for Curb	440-6	May 2001
440-4	Geometric Design Data, Interstate	440-9	May 2001
440-5a	Geometric Design Data, Principal Arterial	440-10	May 2001
440-5b	Geometric Design Data, Principal Arterial	440-11	May 2001
440-6a	Geometric Design Data, Minor Arterial	440-12	May 2001
440-6b	Geometric Design Data, Minor Arterial	440-13	May 2001
440-7a	Geometric Design Data, Collector	440-14	May 2001
440-7b	Geometric Design Data, Collector	440-15	May 2001
510-1	Material Source Development Plan	510-16	November 1999
520-1	Estimating — Miscellaneous Tables	520-2	February 2002
520-2a	Estimating — Asphalt Concrete Pavement and Asphalt Distribution Tables	520-3	February 2002
520-2b	Estimating — Asphalt Concrete Pavement and Asphalt Distribution Tables	520-4	February 2002
520-3	Estimating — Bituminous Surface Treatment	520-5	February 2002
520-4	Estimating — Base and Surfacing Typical Section Formulae and Example	520-6	February 2002
520-5a	Estimating — Base and Surfacing Quantities	520-7	April 1998
520-5b	Estimating — Base and Surfacing Quantities	520-8	April 1998
520-5c	Estimating — Base and Surfacing Quantities	520-9	April 1998
520-5d	Estimating — Base and Surfacing Quantities	520-10	April 1998
520-5e	Estimating — Base and Surfacing Quantities	520-11	April 1998
520-5f	Estimating — Base and Surfacing Quantities	520-12	April 1998
520-5g	Estimating — Base and Surfacing Quantities	520-13	April 1998
520-5h	Estimating — Base and Surfacing Quantities	520-14	April 1998

Figure Number	Title	Page	Last Date
530-1	Selection Criteria for Geotextile Class	530-3	April 1998
530-2	Maximum Sheet Flow Lengths for Silt Fences	530-8	April 1998
530-3	Maximum Contributing Area for Ditch and Swale Applications	530-8	April 1998
530-4	Design Process for Drainage and Erosion Control Geotextiles and Nonstandard Applications	530-12	April 1998
530-5	Design Process for Separation, Soil Stabilization, and Silt Fence	530-13	November 1999
530-6a	Examples of Various Geosynthetics	530-14	April 1998
530-6b	Examples of Various Geosynthetics	530-15	April 1998
530-7a	Geotextile Application Examples	530-16	April 1998
530-7b	Geotextile Application Examples	530-17	April 1998
530-7c	Geotextile Application Examples	530-18	April 1998
530-7d	Geotextile Application Examples	530-19	April 1998
530-8	Definition of Slope Length	530-20	April 1998
530-9	Definition of Ditch or Swale Storage Length and Width	530-21	April 1998
530-10	Silt Fences for Large Contributing Area	530-22	April 1998
530-11	Silt Fence End Treatment	530-23	April 1998
530-12	Gravel Check Dams for Silt Fences	530-24	April 1998
610-1	Type of Area and Appropriate Level of Service	610-3	June 1989
610-2	Adjustment Factor for Type of Multilane Highway and Development Environment, f_E	610-3	June 1989
610-3	Maximum ADT vs. Level of Service and Type of Terrain for Two-Lane Rural Highways	610-4	June 1989
610-4	Service Flow Rate per Lane (SFL) for Multilane Highways	610-5	June 1989
610-5	Peak-Hour Factors	610-6	June 1989
610-6	Service Flow Rates per Lane (SFL) for Freeways	610-6	June 1989
620-1a	Alignment Examples	620-6	April 1998
620-1b	Alignment Examples	620-7	April 1998
620-1c	Alignment Examples	620-8	April 1998
630-1a	Coordination of Horizontal and Vertical Alignments	630-4	April 1998
630-1b	Coordination of Horizontal and Vertical Alignments	630-5	April 1998
630-1c	Coordination of Horizontal and Vertical Alignments	630-6	April 1998
630-2	Grade Length	630-7	April 1998
630-3	Grading at Railroad Crossings	630-8	April 1998
640-1	Minimum Radius for Normal Crown Section	640-5	February 2002
640-2	Side Friction Factor	640-5	February 2002
640-3	Divided Highway Roadway Sections	640-10	February 2002
640-4	Undivided Multilane Highway Roadway Sections	640-11	February 2002
640-5	Two-Lane Highway Roadway Sections	640-12	February 2002
640-6a	Ramp Roadway Sections	640-13	February 2002
640-6b	Ramp Roadway Sections	640-14	February 2002
640-7a	Traveled Way Width for Two-Way Two-Lane Turning Roadways	640-15	February 2002
640-7b	Traveled Way Width for Two-Way Two-Lane Turning Roadways	640-16	February 2002

Figure Number	Title	Page	Last Date
640-8a	Traveled Way Width for Two-Lane One-Way Turning Roadways	640-17	February 2002
640-8b	Traveled Way Width for Two-Lane One-Way Turning Roadways	640-18	February 2002
640-9a	Traveled Way Width for One-Lane Turning Roadways	640-19	February 2002
640-9b	Traveled Way Width for One-Lane Turning Roadways	640-20	February 2002
640-9c	Traveled Way Width for One-Lane Turning Roadways	640-21	February 2002
640-10a	Shoulder Details	640-22	February 2002
640-10b	Shoulder Details	640-23	February 2002
640-11a	Superelevation Rates (10% Max)	640-24	February 2002
640-11b	Superelevation Rates (6% Max)	640-25	February 2002
640-11c	Superelevation Rates (8% Max)	640-26	February 2002
640-12	Superelevation Rates for Turning Roadways at Intersections	640-27	February 2002
640-13a	Superelevation Transitions for Highway Curves	640-28	February 2002
640-13b	Superelevation Transitions for Highway Curves	640-29	February 2002
640-13c	Superelevation Transitions for Highway Curves	640-30	February 2002
640-13d	Superelevation Transitions for Highway Curves	640-31	February 2002
640-13e	Superelevation Transitions for Highway Curves	640-32	February 2002
640-14a	Superelevation Transitions for Ramp Curves	640-33	February 2002
640-14b	Superelevation Transitions for Ramp Curves	640-34	February 2002
640-15a	Divided Highway Median Sections	640-35	February 2002
640-15b	Divided Highway Median Sections	640-36	February 2002
640-15c	Divided Highway Median Sections	640-37	February 2002
640-16a	Roadway Sections in Rock Cuts, Design A	640-38	February 2002
640-16b	Roadway Sections in Rock Cuts, Design B	640-39	February 2002
640-17	Roadway Sections With Stepped Slopes	640-40	February 2002
640-18a	Bridge End Slopes	640-41	February 2002
640-18b	Bridge End Slopes	640-42	February 2002
650-1	Passing Sight Distance	650-1	April 1998
650-2	Design Stopping Sight Distance	650-3	June 1999
650-3	Existing Stopping Sight Distance	650-3	June 1999
650-4	Design Stopping Sight Distance on Grades	650-3	June 1999
650-5	Decision Sight Distance	650-5	April 1998
650-6	Passing Sight Distance for Crest Vertical Curves	650-6	April 1998
650-7	Stopping Sight Distance for Crest Vertical Curves	650-7	April 1998
650-8	Stopping Sight Distance for Sag Vertical Curves	650-8	May 2000
650-9	Horizontal Stopping Sight Distance	650-9	May 2001
700-1	Design Clear Zone Distance Table	700-10	May 2003
700-2a	Design Clear Zone Inventory Form	700-11	May 2003
700-2b	Design Clear Zone Inventory Form	700-12	May 2003
700-3	Recovery Area	700-13	May 2003
700-4	Design Clear Zone for Ditch Sections	700-14	May 2003
700-5	Guidelines for Embankment Barrier	700-15	May 2003
700-6	Mailbox Location and Turnout Design	700-16	May 2003
700-7	Glare Screens	700-17	May 2003
710-1	Type 7 Bridge Rail Upgrade Criteria	710-4	December 2003

Figure Number	Title	Page	Last Date
710-2	Longitudinal Barrier Deflection	710-5	December 2003
710-3	Longitudinal Barrier Flare Rates	710-6	December 2003
710-4	Guardrail Locations on Slopes	710-7	December 2003
710-5	Old Type 3 Anchor	710-10	December 2003
710-6	Guardrail Connections	710-11	December 2003
710-7	Concrete Barrier Shapes	710-13	December 2003
710-8	Concrete Barrier Placement Guidance	710-15	December 2003
710-9	Safety Shaped Concrete Bridge Rail Retrofit	710-17	December 2003
710-10	Transitions and Connections	710-18	December 2003
710-11a	Barrier Length of Need	710-19	December 2003
710-11b	Barrier Length of Need	710-20	December 2003
710-11c	Barrier Length of Need on Curves	710-21	December 2003
710-12	Beam Guardrail Post Installation	710-22	December 2003
710-13	Beam Guardrail Terminals	710-23	December 2003
710-14	Cable Barrier Locations on Slopes	710-24	December 2003
710-15	Thrie Beam Bridge Rail Retrofit Criteria	710-25	December 2003
720-1	Impact Attenuator Sizes	720-6	September 2002
720-2a	Impact Attenuator Systems — Permanent Installations	720-8	September 2002
720-2b	Impact Attenuator Systems — Permanent Installations	720-9	September 2002
720-2c	Impact Attenuator Systems — Permanent Installations	720-10	September 2002
720-2d	Impact Attenuator Systems — Permanent Installations	720-11	September 2002
720-3	Impact Attenuator Systems — Work Zone Installations	720-12	September 2002
720-4a	Impact Attenuator Systems — Older Systems	720-13	September 2002
720-4b	Impact Attenuator Systems — Older Systems	720-14	September 2002
720-5	Impact Attenuator Comparison	720-15	September 2002
810-1a	Work Zone Types	810-13	December 2003
810-1b	Work Zone Types	810-14	December 2003
810-1c	Work Zone Types	810-15	December 2003
810-2a	Sign Placement — Rural Areas	810-16	December 2003
810-2b	Sign Placement — Urban Areas	810-17	December 2003
810-3	Channelization Devices	810-18	December 2003
810-4	Barricade Types	810-19	December 2003
810-5	Barrier Delineators	810-20	December 2003
820-1a	Sign Support Locations	820-5	November 1999
820-1b	Sign Support Locations	820-6	November 1999
820-2	Wood Posts	820-7	November 1999
820-3	Steel Posts	820-8	November 1999
820-4	Laminated Wood Box Posts	820-9	November 1999
830-1	Pavement Marking Material Guide	830-6	May 2000
830-2	Guide Post Placement	830-7	May 2000
830-3	Wildlife Reflectors on a Tangent Section	830-8	May 2000
830-4	Wildlife Reflectors on the Outside of a Curve	830-8	May 2000
840-1	Freeway Lighting Applications	840-9	December 2003
840-2	Freeway Lighting Applications	840-10	December 2003
840-3	Roadway Lighting Applications	840-11	December 2003
840-4	Roadway Lighting Applications	840-12	December 2003
840-5	Roadway Lighting Applications	840-13	December 2003

Figure Number	Title	Page	Last Date
840-6	Light Levels and Uniformity Ratios	840-14	December 2003
840-7	Light Standard Locations	840-15	December 2003
840-8	Luminaire Wattage, Lumens, and Mounting Heights	840-16	December 2003
850-1	Signal Display Maximum Heights	850-13	May 2001
850-2	Signal Display Areas	850-14	May 2001
850-3	Responsibility for Facilities	850-17	May 2001
850-4	Standard Intersection Movements and Head Numbers	850-18	May 2001
850-5	Phase Diagrams-Four Way Intersections	850-19	May 2001
850-6	Turn Lane Configuration Preventing Concurrent Phasing Double Left Turn Channelization	850-20	May 2001
850-7	Railroad Preemption Phasing	850-21	May 2001
850-8a	Pedestrian Push Button Locations	850-22	May 2001
850-8b	Pedestrian Push Button Locations	850-23	May 2001
850-9	Dilemma Zone Loop Placement	850-24	May 2001
850-10	Railroad Queue Clearance	850-25	May 2001
850-11a	Intersections With Railroad Crossings	850-26	May 2001
850-11b	Intersections With Railroad Crossings	850-27	May 2001
850-12a	Traffic Signal Display Placements	850-28	May 2001
850-12b	Traffic Signal Display Placements	850-29	May 2001
850-12c	Traffic Signal Display Placements	850-30	May 2001
850-12d	Traffic Signal Display Placements	850-31	May 2001
850-12e	Traffic Signal Display Placements	850-32	May 2001
850-13	Mast Arm Signal Moment and Foundation Depths	850-33	May 2001
850-14a	Strain Pole and Foundation Selection Procedure	850-34	May 2001
850-14b	Strain Pole and Foundation Selection Procedure	850-35	May 2001
850-15	Strain Pole and Foundation Selection Example	850-36	May 2001
850-16	Conduit and Conductor Sizes	850-37	May 2001
910-1	Minimum Intersection Spacing	910-4	May 2001
910-2	Design Vehicle Types	910-4	May 2001
910-3	Intersection Design Vehicle	910-5	May 2001
910-4	Left-Turn Storage With Trucks (ft)	910-7	May 2001
910-5	U-Turn Spacing	910-10	February 2002
910-6	Sight Distance for Turning Vehicles	910-11	May 2001
910-7a	Turning Path Template	910-14	May 2001
910-7b	Turning Path Template	910-15	May 2001
910-7c	Turning Path Template	910-16	May 2001
910-8	Right-Turn Corner	910-17	May 2001
910-9a	Left-Turn Storage Guidelines (Two-Lane, Unsignalized)	910-18	May 2001
910-9b	Left-Turn Storage Guidelines (Four-Lane, Unsignalized)	910-19	May 2001
910-10a	Left-Turn Storage Length (Two-Lane, Unsignalized)	910-20	May 2001
910-10b	Left-Turn Storage Length (Two-Lane, Unsignalized)	910-21	May 2001
910-10c	Left-Turn Storage Length (Two-Lane, Unsignalized)	910-22	May 2001
910-11a	Median Channelization (Widening)	910-23	February 2002
910-11b	Median Channelization — Median Width 23 ft to 26 ft	910-24	February 2002
910-11c	Median Channelization — Median Width of More Than 26 ft	910-25	February 2002
910-11d	Median Channelization (Minor Intersection)	910-26	May 2001
910-11e	Median Channelization (Two-Way Left-Turn Lane)	910-27	May 2001

Figure Number	Title	Page	Last Date
910-12	Right-Turn Lane Guidelines	910-28	May 2001
910-13	Right-Turn Pocket and Right-Turn Taper	910-29	February 2002
910-14	Right-Turn Lane	910-30	February 2002
910-15	Acceleration Lane	910-31	May 2001
910-16a	Traffic Island Designs	910-32	May 2001
910-16b	Traffic Island Designs (Compound Curve)	910-33	May 2001
910-16c	Traffic Island Designs	910-34	May 2001
910-17	U-Turn Locations	910-35	May 2001
910-18a	Sight Distance for Grade Intersection With Stop Control	910-36	May 2001
910-18b	Sight Distance at Intersections	910-37	May 2001
910-19	Interchange Ramp Details	910-38	May 2001
915-1	Roundabout Elements	915-3	February 2002
915-2	Entry Angle	915-4	February 2002
915-3	Turning Radius (R)	915-5	February 2002
915-4	Deflection	915-8	February 2002
915-5	Stopping Sight Distance for Roundabouts	915-10	February 2002
915-6	Roundabout Categories Design Characteristics	915-16	February 2002
915-7	Approximate Entry Capacity	915-17	February 2002
915-8a	Deflection Path	915-18	February 2002
915-8b	Deflection Path	915-19	February 2002
915-9	Deflection Path Radius	915-20	February 2002
915-10	Entry and Exit	915-21	February 2002
915-11	Path Overlap	915-22	February 2002
915-12	Roundabout Intersection Sight Distance	915-23	February 2002
915-13	Central Island	915-24	February 2002
915-14	Splitter Island	915-25	February 2002
915-15	Shared Use Sidewalk	915-26	February 2002
915-16	Roundabout Signing	915-27	February 2002
915-17	Roundabout Pavement Marking	915-28	February 2002
915-18	Roundabout Illumination	915-29	February 2002
920-1	Road Approach Design Templates	920-2	December 2003
920-2	Road Approach Access Category	920-2	December 2003
920-3	Road Approach Design Template A1	920-5	December 2003
920-4	Road Approach Design Templates B1 and C1	920-6	December 2003
920-5	Road Approach Design Template D1	920-7	December 2003
920-6	Road Approach Sight Distance	920-8	December 2003
930-1 M	Sight Distance at Railroad Crossing	930-4	March 1994
930-2	Guidelines for Railroad Crossing Protection	930-5	June 1989
930-3 M	Typical Pullout Lane at Railroad Crossing	930-6	March 1994
930-4 M	Railroad Crossing Plan for Washington Utilities and Transportation Commission	930-7	March 1994
930-5 M	Longitudinal Easement Cross Sections	930-8	March 1994
930-1	Sight Distance at Railroad Crossing	930-9	March 1994
930-3	Typical Pullout Lane at Railroad Crossing	930-10	March 1994
930-4	Railroad Crossing Plan for Washington Utilities and Transportation Commission	930-11	March 1994
930-5	Longitudinal Easement Cross Sections	930-12	March 1994
940-1	Ramp Design Speed	940-5	September 2002

Figure Number	Title	Page	Last Date
940-2	Maximum Ramp Grade	940-5	September 2002
940-3	Ramp Widths (ft)	940-5	September 2002
940-4	Basic Interchange Patterns	940-12	September 2002
940-5	Minimum Ramp Connection Spacing	940-13	September 2002
940-6a	Lane Balance	940-14	September 2002
940-6b	Lane Balance	940-15	September 2002
940-7	Main Line Lane Reduction Alternatives	940-16	September 2002
940-8	Acceleration Lane Length	940-17	September 2002
940-9a	On-Connection (Single-Lane, Taper Type)	940-18	September 2002
940-9b	On-Connection (Single-Lane, Parallel Type)	940-19	September 2002
940-9c	On-Connection (Two-Lane, Parallel Type)	940-20	September 2002
940-9d	On-Connection (Two-Lane, Taper Type)	940-21	September 2002
940-10	Deceleration Lane Length	940-22	September 2002
940-11a	Gore Area Characteristics	940-23	September 2002
940-11b	Gore Area Characteristics	940-24	September 2002
940-12a	Off-Connection (Single-Lane, Taper Type)	940-25	September 2002
940-12b	Off-Connection (Single-Lane, Parallel Type)	940-26	September 2002
940-12c	Off-Connection (Single-Lane, One-Lane Reduction)	940-27	September 2002
940-12d	Off-Connection (Two-Lane, Taper Type)	940-28	September 2002
940-12e	Off-Connection (Two-Lane, Parallel Type)	940-29	September 2002
940-13a	Collector Distributor (Outer Separations)	940-30	September 2002
940-13b	Collector Distributor (Off-Connections)	940-31	September 2002
940-13c	Collector Distributor (On-Connections)	940-32	September 2002
940-14	Loop Ramps Connections	940-33	September 2002
940-15	Length of Weaving Sections	940-34	September 2002
940-16	Temporary Ramps	940-35	September 2002
940-17	Interchange Plan	940-36	September 2002
1010-1	Rolling Resistance	1010-4	November 1999
1010-2a	Performance for Heavy Trucks	1010-6	November 1999
1010-2b	Speed Reduction Example	1010-7	November 1999
1010-3	Level of Service — Multilane	1010-8	May 2001
1010-4	Auxiliary Climbing Lane	1010-9	November 1999
1010-5	Warrant for Passing Lanes	1010-10	November 1999
1010-6	Auxiliary Passing Lane	1010-11	November 1999
1010-7	Slow Moving Vehicle Turnout	1010-12	November 1999
1010-8	Typical Emergency Escape Ramp	1010-13	November 1999
1010-9	Chain-Up/Chain-Off Area	1010-14	November 1999
1020-1	Shared Use Path	1020-3	May 2001
1020-2	Bike Lane	1020-4	May 2001
1020-3	Shared Roadway	1020-4	May 2001
1020-4	Signed Shared Roadway (Designated Bike Route)	1020-5	May 2001
1020-5	Obstruction Marking	1020-8	May 2001
1020-6	Midblock Type Shared Use Path Crossing	1020-9	May 2001
1020-7	Typical Redesign of a Diagonal Midblock Crossing	1020-10	May 2001
1020-8	Adjacent Shared Use Path Intersection	1020-11	May 2001
1020-9	Railroad Crossing for Shared Used Path	1020-12	May 2001
1020-10	Bicycle Design Speeds	1020-13	May 2001

Figure Number	Title	Page	Last Date
1020-11	Bikeway Curve Widening	1020-13	May 2001
1020-12	R Values and Subsurfacing Needs	1020-14	May 2001
1020-13	Two-Way Shared Use Path on Separate Right of Way	1020-18	May 2001
1020-14	Two-Way Shared Use Path Adjacent to Roadway	1020-19	May 2001
1020-15	Typical Bike Lane Cross Sections	1020-20	May 2001
1020-16	Bikeways on Highway Bridges	1020-21	May 2001
1020-17	Refuge Area	1020-22	May 2001
1020-18	At-Grade Railroad Crossings	1020-23	May 2001
1020-19	Stopping Sight Distance	1020-24	May 2001
1020-20	Sight Distance for Crest Vertical Curves	1020-25	September 2002
1020-21	Lateral Clearance on Horizontal Curves	1020-26	September 2002
1020-22	Typical Bicycle/Auto Movements at Intersection of Multilane Streets	1020-27	May 2001
1020-23a	Bicycle Crossing of Interchange Ramp	1020-28	May 2001
1020-23b	Bicycle Crossing of Interchange Ramp	1020-29	May 2001
1020-24	Bike Lanes Approaching Motorists' Right-Turn-Only Lanes	1020-30	May 2001
1020-25	Typical Pavement Marking for Bike Lane on Two-Way Street	1020-31	May 2001
1020-26	Typical Bike Lane Pavement Markings at T-Intersections	1020-32	May 2001
1025-1	Trail Width and Grades	1025-5	May 2001
1025-2a	Pedestrian Walkways	1025-10	May 2001
1025-2b	Pedestrian Walkways	1025-11	May 2001
1025-3	Sidewalk Recommendations	1025-12	May 2001
1025-4	Marked Crosswalk Recommendations at Unsignalized Pedestrian Crossings	1025-13	May 2001
1025-5	Crosswalk Locations	1025-14	May 2001
1025-6a	Sight Distance at Intersections	1025-15	May 2001
1025-6b	Sight Distance at Intersections	1025-16	May 2001
1025-7	Sidewalk Bulb Outs	1025-17	May 2001
1025-8	Midblock Pedestrian Crossing	1025-18	May 2001
1025-9	Sidewalk Ramp Drainage	1025-19	May 2001
1030-1	Typical Truck Storage	1030-2	December 2003
1030-2	Typical Single RV Dump Station Layout	1030-3	December 2003
1030-3	Typical Two RV Dump Station Layout	1030-4	December 2003
1040-1	Truck Weigh Site (Multilane Highways)	1040-6	May 2000
1040-2	Truck Weigh Site (Two Lane Highways)	1040-7	May 2000
1040-3	Vehicle Inspection Installation	1040-8	May 2000
1040-4	Minor Portable Scale Site	1040-9	May 2000
1040-5	Major Portable Scale Site	1040-10	May 2000
1040-6	Small Shoulder Site	1040-11	May 2000
1040-7	Large Shoulder Site	1040-12	May 2000
1040-8a	MOU Related to Vehicle Weighing and Equipment Inspection Facilities on State Highways	1040-13	May 2000
1040-8b	MOU Related to Vehicle Weighing and Equipment Inspection Facilities on State Highways	1040-14	May 2000
1040-8c	MOU Related to Vehicle Weighing and Equipment Inspection Facilities on State Highways	1040-15	May 2000

Figure Number	Title	Page	Last Date
1040-8d	MOU Related to Vehicle Weighing and Equipment Inspection Facilities on State Highways	1040-16	May 2000
1040-8e	MOU Related to Vehicle Weighing and Equipment Inspection Facilities on State Highways	1040-17	May 2000
1050-1	Minimum Traveled Way Widths for Articulated Buses	1050-8	May 2003
1050-2	Typical HOV Lane Sections	1050-11	May 2003
1050-3	Roadway Widths for Two-Lane Ramps with an HOV Lane	1050-12	May 2003
1050-4a	Single-Lane Ramp Meter With HOV Bypass	1050-13	May 2003
1050-4b	Two-Lane Ramp Meter With HOV Bypass	1050-14	May 2003
1050-5a	Enforcement Area (One Direction Only)	1050-15	May 2003
1050-5b	Enforcement Area (Median)	1050-16	May 2003
1060-1 M	Bus Berth Designs	1060-14	March 1994
1060-2	Transit Center Sawtooth Bus Berth Design Example	1060-15	December 1991
1060-3 M	Bus Turnout Transfer Center	1060-16	March 1994
1060-4 M	Off-Street Transfer Center	1060-17	March 1994
1060-5 M	Minimum Bus Zone Dimensions	1060-18	March 1994
1060-6	Bus Stop Pullouts, Arterial Streets	1060-19	November 1997
1060-7 M	Minimum Bus Zone and Pullout after Right Turn Dimensions	1060-20	March 1994
1060-8 M	Shelter Siting	1060-21	March 1994
1060-9 M	Typical Bus Shelter Design	1060-22	March 1994
1060-10 M	Design Vehicle Turning Movements	1060-23	July 1994
1060-11 M	Turning Template for Articulated Bus	1060-24	July 1994
1060-12 M	Intersection Design	1060-25	March 1994
1060-13 M	Cross-Street Width Occupied by Turning Vehicle for Various Angles of Intersection and Curb Radii	1060-26	March 1994
1060-1	Bus Berth Designs	1060-27	March 1994
1060-3	Bus Turnout Transfer Center	1060-28	March 1994
1060-4	Off-Street Transfer Center	1060-29	March 1994
1060-5	Minimum Bus Zone Dimensions	1060-30	March 1994
1060-6	Bus Stop Pullouts, Arterial Streets	1060-31	March 1994
1060-7	Minimum Bus Zone and Pullout after Right Turn Dimensions	1060-32	March 1994
1060-8	Shelter Siting	1060-33	March 1994
1060-9	Typical Bus Shelter Design	1060-34	March 1994
1060-10	Design Vehicle Turning Movements	1060-35	July 1994
1060-11	Turning Template for Articulated Bus	1060-36	July 1994
1060-12	Intersection Design	1060-37	March 1994
1060-13	Cross-Street Width Occupied by Turning Vehicle for Various Angles of Intersection and Curb Radii	1060-38	March 1994
1110-1	Bridge Site Data Check List	1110-5	December 2003
1120-1	Bridge Vertical Clearances	1120-4	September 2002
1120-2a	Railroad Vertical Clearance for New Bridge Construction	1120-6	September 2002
1120-2b	Railroad Vertical Clearance for Existing Bridge Modifications	1120-7	September 2002
1130-1a	Typical Mechanically Stabilized Earth Gravity Walls	1130-22	December 1998
1130-1b	Typical Prefabricated Modular Gravity Walls	1130-23	December 1998

Figure Number	Title	Page	Last Date
1130-1c	Typical Rigid Gravity, Semigravity Cantilever, Nongravity Cantilever, and Anchored Walls	1130-24	May 2003
1130-1d	Typical Rockery and Reinforced Slope	1130-25	May 2003
1130-2	MSE Wall Drainage Detail	1130-26	May 2003
1130-3	Retaining Walls With Traffic Barriers	1130-27	May 2003
1130-4a	Retaining Wall Design Process	1130-28	May 2003
1130-4b	Retaining Wall Design Process — Proprietary	1130-29	May 2003
1130-5	Retaining Wall Bearing Pressure	1130-30	December 1998
1140-1	Standard Noise Wall Types	1140-3	May 2003
1350-1	Soil Bioengineering Design	1350-3	December 2003
1410-1	Appraisal and Acquisition	1410-6	June 1999
1420-1	Access Vocabulary	1420-6	December 2003
1425-1a	Access Point Decision Report Content and Review Levels	1425-11	May 2000
1425-1b	Access Point Decision Report Content and Review Levels	1425-12	May 2000
1425-2	Access Point Decision Report Possibly Not Required	1425-13	May 2000
1425-3a	Access Point Decision Report Flow Chart	1425-14	May 2000
1425-3b	Access Point Decision Report Flow Chart	1425-15	May 2000
1430-1a	Full Access Control Limits - Interchange	1430-15	December 2003
1430-1b	Full Access Control Limits - Interchange	1430-16	December 2003
1430-1c	Full Access Control Limits - Interchange	1430-17	December 2003
1430-2	Full Access Control Limits - Ramp Terminal With Transition Taper	1430-18	December 2003
1430-3	Full Access Control Limits - Single Point Urban Interchange	1430-19	December 2003
1430-4	Partial Access Control Limits - At-Grade Intersections	1430-20	December 2003
1430-5	Partial and Modified Access Control Limits - Roundabout Intersections	1430-21	December 2003
1430-6	Modified Access Control Limits - Intersections	1430-22	December 2003
1435-1	Minimum Corner Clearance	1435-6	December 2003
1435-2	Minimum Corner Clearance: Distance From Access Connection to Intersections	1435-7	December 2003
1435-3	Managed Access Highway Class Description	1435-14	December 2003
1440-1a	Interagency Agreement	1440-4	June 1999
1440-1b	Interagency Agreement	1440-5	June 1999
1450-1	Monument Documentation Summary	1450-4	May 2001
1450-2a	DNR Permit Application	1450-5	May 2001
1450-2b	DNR Completion Record Form	1450-6	May 2001
1450-3a	Land Corner Record	1450-7	May 2001
1450-3b	Land Corner Record	1450-8	May 2001

325.01 General
325.02 Selecting a Design Matrix
325.03 Using a Design Matrix

325.01 General

This *Design Manual* provides guidance for three levels of design for highway projects: the basic, modified, and full design levels. The design matrices in this chapter are used to identify the design level(s) for a project and the associated processes for allowing design variances. The matrices address the majority of preservation and improvement projects and focus on those Design Elements that are of greatest concern in project development.

The design matrices are five tables that are identified by route type. Two of the matrices apply to Interstate highways. The other three matrices apply to non-Interstate highways and address preservation and improvement projects.

A design matrix is used to determine the design level for the Design Elements of a project. Apply the appropriate design levels and document the design decisions as required by this chapter and Chapter 330.

325.02 Selecting a Design Matrix

Selection of a design matrix is based on highway system (Interstate, NHS excluding Interstate, and non-NHS) and location (main line, interchange). (See Figure 325-1.)

Highway System	Location	
	Main Line	Interchange Area
Interstate	Matrix 1	Matrix 2
NHS(1)	Matrix 3	Matrix 4
Non-NHS	Matrix 5	Matrix 4

(1) Except Interstate.

Design Matrix Selection Guide
Figure 325-1

The **Interstate System** (Matrices 1 and 2) is a network of routes selected by the state and the FHWA under terms of the federal aid acts. These routes are principal arterials that are the most important to the economic welfare and defense of the United States. They connect, as directly as practicable:

- Principal metropolitan areas and cities
- Industrial centers
- International border crossings

The Interstate System also includes important routes into, through, and around urban areas, serves the national defense, and, where possible, connects with routes of continental importance. It serves international and interstate travel and military movements.

The Interstate System is represented on the list of NHS highways, Figures 325-2a and 2b, with the letter "I" before the route number.

The **National Highway System (NHS)** (Matrices 3 and 4) is an interconnected system of principal arterial routes and highways (including toll facilities) that serve:

- Major population centers
- International border crossings
- Industrial centers
- Ports
- Airports
- Public transportation facilities
- Other intermodal transportation facilities
- Other major travel destinations

The NHS includes the Interstate System and the Strategic Highway Corridor Network (STRAHNET) and its highway connectors to major military installations (Interstate and non-Interstate).

The NHS meets national defense requirements and serves international, interstate, and interregional travel.

See Figures 325-2a and 2b.

The **Non-NHS** highways (Matrices 4 and 5) are state routes that form a network of highways that supplement the NHS system by providing for freight mobility and, mainly, regional and interregional travel. Non-NHS highways are not shown on Figures 325-2a and 2b. They are shown on WSDOT's (free) Official State Highway Map of Washington.

325.03 Using a Design Matrix

The design matrices are shown in Figures 325-3 through 325-7. Follow *Design Manual* guidance for all projects except as noted in the design matrices and elsewhere as applicable.

(1) Project Type

For project types not listed in the design matrices (such as unstable slopes), consult the Headquarters Design Office for guidance.

In the design matrices, row selection is based on Project Type. The Project Summary defines and describes the project. (Project Summary is discussed in Chapter 330.) For NHS and non-NHS routes (Matrices 3, 4, and 5), the project's program/subprogram might be sufficient information for identifying Project Type. See the *Programming Manual* for details about funding programs and subprograms.

The various sources of funds for these subprograms carry eligibility requirements that the designers and Project Development must identify and monitor throughout project development — this is especially important to ensure accuracy when writing agreements and to avoid delaying advertisement for bids if the Project Type changes.

Some projects involve work from several subprograms. In such cases, identify the various limits of the project that apply to each subprogram. Where the project limits overlap, apply the higher design level to the overlapping portion.

(a) **Project Types for Matrices 1 and 2** (in alphabetical order) are:

Bridge Deck Rehabilitation is repair of any delaminated concrete bridge deck and adds a protective overlay that will provide a sound, smooth surface; prevent further corrosion of the reinforcing steel; and preserve operational and structural capacity.

Bridge Rail Upgrades are safety improvements to update older bridge rails to improve strength and redirectional capabilities.

Diamond Grinding is grinding a concrete pavement, using gang mounted diamond saw blades, to remove surface wear or joint faulting.

Dowel Bar Retrofit is reestablishing the load transfer efficiencies of the existing concrete joints and transverse cracks by cutting slots, placement of epoxy coated dowel bars, and placement of high-early strength, nonshrink concrete.

Guardrail Upgrades are safety improvement projects limited to the specified roadside Design Elements. The length of need is examined and minor adjustments are made. Removal is an option if guardrail is no longer needed. Additional length of more than 5% of the existing length is usually beyond the intent of this program. In these instances, consider funding from another program/subprogram source.

HMA Structural Overlays is a hot mix asphalt overlay that is placed to increase the load carrying ability of the pavement structure. Structural overlay thickness is greater than 0.15 ft.

Median Barrier projects are safety improvement projects limited to the specified roadside Design Elements.

Milling with HMA Inlays is removal of a specified thickness of the existing HMA pavement, typically from the traveled lanes, and then overlaying with HMA at the same specified thickness.

New/Reconstruction includes the following types of work:

- Capacity changes: add a through lane, convert a general purpose (GP) lane to a special purpose lane (such as an HOV lane), or convert a high occupancy vehicle (HOV) lane to GP.
- Other lane changes: add or eliminate a collector-distributor or auxiliary lane. (A rural truck climbing lane that, for its entire length, meets the warrants in Chapter 1010 is not considered new/reconstruction.)
- Pavement reconstruction: full depth PCCP or HMA replacement.
- New interchange.
- Changes in interchange type such as diamond to directional or adding a ramp.
- New or replacement bridge (on or over, main line or interchange ramp).

Nonstructural Overlay is an HMA pavement overlay that is placed to minimize the aging effects and minor surface irregularities of the existing HMA pavement structure. The existing HMA pavement structure is not showing extensive signs of fatigue (longitudinal or alligator cracking in the wheel paths). Nonstructural overlays are less than or equal to 0.15 ft thick, and frequently less than 0.12 ft thick.

PCCP Overlays are Portland cement concrete pavement overlay of an existing PCCP or HMA surface.

Preventive Maintenance includes roadway work such as pavement patching; restoration of drainage system; panel replacement; joint and shoulder repair; and bridge work such as crack sealing, joint repair, slope stabilization, seismic retrofit, scour countermeasures, and painting. Preventive maintenance projects must not degrade any existing safety or geometric aspects of the facility.

(b) **Project Types for Matrices 3, 4, and 5** (not Interstate) (in alphabetical order) are:

At Grade projects are safety improvements on NHS highways (45 mph or greater) to build grade separation facilities that replace the existing intersections.

Bike Routes (Shldrs) are main line economic development improvements to provide a statewide network of rural bicycle touring routes with shoulders a minimum of four feet wide.

Bike/Ped. Connectivity projects are mobility improvements to provide bicycle/pedestrian connections, along or across state highways within urban growth areas, to complete local networks.

Bridge Deck Rehab. projects are structures preservation, which repair delaminated bridge decks and add protective overlays that will provide a sound, smooth surface; prevent further corrosion of the reinforcing steel; and preserve operational and structural integrity.

Bridge Rail Upgrades are safety improvements to update older bridge rails to improve strength and redirectional capabilities.

Bridge Repl. (Multilane) projects are non-NHS main line structures preservation that replace bridges on multilane highways to improve operational and structural capacity.

Bridge Replacement projects are NHS and two-lane non-NHS (main line and interchange) structures preservation that replace bridges to improve operational and structural capacity.

Bridge Restrictions projects are main line economic development improvements that remove vertical or load capacity restrictions to benefit the movement of commerce.

BST projects are non-NHS roadway preservation to do bituminus surface treatment (BST) work only, to protect the public investment.

BST Routes/Basic Safety projects are non-NHS roadway preservation to resurface highways at regular intervals and restore existing safety features to protect the public investment.

Corridor projects are main line improvements to reduce and prevent collisions (vehicular, nonmotorized, and pedestrian) within available resources.

Four-Lane Trunk System projects are NHS economic development improvements to complete contiguous four-lane limited access facilities on a trunk system consisting of all Freight and Goods Transportation Routes (FGTS) with a classification of 10,000,000 tons/year.

Freight & Goods (Frost Free) projects are main line economic development improvements to reduce delay from weather related closures on high priority freight and goods highways.

Guardrail Upgrades are safety improvement projects limited to the specified roadside Design Elements. These projects focus on W beam with 12'-6" spacing and on guardrail systems with concrete posts. The length of need is examined and minor adjustments are made. Removal is an option if guardrail is no longer needed. Additional length of more than 5% of the existing length is usually beyond the intent of this program. In these instances, consider funding from another source and if the length of need is not met, document the reason(s) why to the Design Documentation Package (DDP).

HMA/PCCP projects are non-NHS roadway preservation to resurface highways at regular intervals and restore existing safety features to protect the public investment.

HMA/PCCP/BST Overlays are NHS main line roadway preservation projects that resurface the existing surfaces at regular intervals to protect the public investment.

HMA/PCCP/BST Overlays Ramps are NHS and non-NHS ramp roadway preservation projects that resurface the existing surfaces at regular intervals and restore existing safety features to protect the public investment.

HOV Bypass projects are NHS and non-NHS ramp mobility improvements to improve mobility within congested highway corridors by providing HOV bypass lanes on freeway ramps. Congested highway corridors have high congestion index values as described in the *Highway System Plan* (footnote in text for Improvement/Mobility).

HOV projects are main line mobility improvements completing the freeway Core HOV lane system in the Puget Sound region, and providing level of service C on HOV lanes (including business access transit lanes), within congested highway corridors.

Intersection projects are safety improvements to reduce and prevent collisions to increase the safety of highways and to improve pedestrian safety within available resources.

Median Barrier projects are main line safety improvements limited to the specified roadside Design Elements – mainly new median barrier with a focus on cable barrier to reduce median crossover accidents.

Non-Interstate Freeway (mobility) projects, on non-NHS and NHS interchanges and on NHS main line, are mobility improvements on multilane divided highways, with limited access control, within congested highway corridors.

Non-Interstate Freeway (roadway preservation) projects, on non-NHS and NHS interchanges and on NHS main line, are roadway preservation to overlay or inlay with HMA/PCCP/BST on multilane divided highways, with limited access control, to minimize long-term costs and restore existing safety features.

Non-Interstate Freeway (safety) are NHS and non-NHS (main line and interchanges) safety improvements on multilane divided highways, with limited access control, to increase the safety within available resources.

Replace HMA w/ PCCP at I/S (intersections) projects are NHS and non-NHS main line roadway preservation that restores existing safety features and replaces existing HMA intersection pavement that has reached the point of lowest lifecycle cost (11-15 years old) with PCCP that has about a 40 year life cycle.

Rest Areas (New) projects are NHS and non-NHS main line economic development and safety improvements to provide rest areas every 60 miles, and some RV dump stations.

Risk, Realignment projects are improvements intended to improve alignment at specific locations where the Risk program has identified a high probability of collisions/accidents.

Risk, Roadside projects are improvements intended to mitigate roadside conditions at specific locations where the Risk program has identified a high probability of vehicular encroachment.

Risk, Roadway Width projects are improvements intended to adjust the roadway width at specific locations where the Risk program has identified a high probability of a vehicle leaving its lane of travel.

Risk, Sight Distance projects are improvements intended to improve sight distance at specific locations where the Risk program has identified a high probability of collisions/accidents.

Rural projects are mobility improvements providing uncongested level of service on rural highways within congested highway corridors. (See HOV Bypass above for cross reference regarding "congested.")

Urban (Multilane) projects are non-NHS mobility improvements within congested urban multilane highway corridors. (See HOV Bypass above for cross reference regarding "congested.")

Urban projects are NHS and two-lane non-NHS (main line and interchange) mobility improvements within congested urban highway corridors. (See HOV Bypass above for cross reference regarding "congested.")

(2) Design Elements

The column headings on a design matrix are **Design Elements.** Not all potential design elements have been included in the matrices.

The Design Elements that are included are based on the following thirteen FHWA controlling design criteria: design speed, lane width, shoulder width, bridge width, structural capacity, horizontal alignment, vertical alignment, grade, stopping sight distance, cross slope, superelevation, vertical clearance, and horizontal clearance. For the column headings, some of these controlling criteria have been combined (for example, design speed is part of horizontal and vertical alignment).

If using a design element that is not on the assigned matrix, use full design level as found elsewhere in this manual.

If using a design element that is not covered in this manual, use an approved manual or guidance on the subject and document the decision and the basis for the decision.

The following elements are shown on the design matrices. If the full design level applies, see the chapters listed below. If basic design level applies, see Chapter 410. If the modified design level applies, see Chapter 430.

Horizontal Alignment is the horizontal attributes of the roadway including horizontal curvature, superelevation, and stopping sight distance; all based on design speed. (See Chapter 620 for horizontal alignment, Chapter 640 for superelevation, Chapter 650 for stopping sight distance, and Chapters 440 or 940 for design speed.)

Vertical Alignment is the vertical attributes of the roadway including vertical curvature, profile grades, and stopping sight distance; all based on design speed. (See Chapter 630 for vertical alignment, Chapters 430, 440, 630, and 940 for grades, Chapters 430 and 650 for stopping sight distance, and Chapter 430, 440, or 940 for design speed.)

Lane Width is defined in Chapter 440. (See also Chapters 430, 640, and 940.)

Shoulder Width is defined in Chapter 440. (See also Chapters 430, 640, and 940.) Also see Chapter 710 for shy distance requirements when barrier is present.

Lane Transitions (pavement transitions) are the rate and length of transition of changes in width of lanes. (See Chapter 620.)

On/Off Connection is the widened portion of pavement at the end of a ramp connecting to a main lane of a freeway. (See Chapter 940.)

Median Width is the distance between inside edge lines. (See Chapters 440 and 640.)

Cross Slope, Lane is the rate of elevation change across a lane. This element includes the algebraic difference in cross slope between adjacent lanes. (See Chapter 430 and Traveled Way Cross Slope in 640.)

Cross Slope, Shoulder is the rate of elevation change across a shoulder. (See Chapters 430 and 640.)

Fill/Ditch Slope is the downward slope from edge of shoulder to bottom of ditch or catch. (See Chapters 430 and 640.)

Access is the means of entering or leaving a public road, street, or highway with respect to abutting private property or another public road, street, or highway. (See Chapter 1420.)

Clear Zone is the total roadside border area, starting at the edge of the traveled way, available for use by errant vehicles. This area may consist of a shoulder, a recoverable slope, a nonrecoverable slope, and/or a clear run-out area. (The median is part of a clear zone.) (See Chapter 700.)

Signing, Delineation, Illumination are signs, guide posts, pavement markings, and lighting. (See Chapter 820 for signing and 1120 for bridge signs, Chapter 830 for delineation, and Chapter 840 for illumination.)

Vertical Clearance - see Chapter 1120.

Basic Safety is the list of safety items in Chapter 410.

Bicycle and Pedestrian See Chapter 1020, Bicycle Facilities, and Chapter 1025, Pedestrian Design Considerations, for definitions.

Bridges: Lane Width is the width of a lane on a structure. (See Chapters 430, 440, 640, 940 and 1120.)

Bridges: Shoulder Width is the distance between the edge of traveled way and the face of curb or barrier, whichever is less. (See Chapters 430, 440, 640, 940 and 1120.) Also see Chapter 710 for shy distance requirements.

Bridges/Roadway: Vertical Clearance is the minimum height between the roadway, including shoulder, and an overhead obstruction. (See Chapter 1120.)

Bridges: Structural Capacity is the load bearing ability of a structure. (See Chapter 1120.)

Intersections/Ramp Terminals: Turn Radii See Chapter 910 for definition.

Intersections/Ramp Terminals: Angle See Chapter 910 for definition.

Intersections/Ramp Terminals: Intersection Sight Distance See Chapters 910 and 940 for definitions.

Barriers: Terminals and Transition Sections — **Terminals** are crashworthy end treatments for longitudinal barriers that are designed to reduce the potential for spearing, vaulting, rolling, or excessive deceleration of impacting vehicles from either direction of travel. Impact attenuators are considered terminals. Beam guardrail terminals include anchorage. — **Transition Sections** are sections of barriers used to produce a gradual stiffening of a flexible or semirigid barrier as it connects to a more rigid barrier or fixed object. (See Chapters 700, 710, and 720.)

Barriers: Standard Run are guardrail and other barriers as found in the *Standard Plans for Road Bridge and Municipal Construction* excluding terminals, transitions, attenuators, and bridge rails. (See Chapter 710.)

Barriers: Bridge Rail is barrier on a bridge excluding transitions. (See Chapter 710.)

(3) Design Level

In the non-Interstate matrices, design levels are noted in the cells by B, M, F, and sometimes with a number corresponding to a footnote on the matrix. For Improvement type projects full design level applies to all design elements except as noted in the design matrices and in other chapters as applicable. In the Interstate matrices, only full design level applies.

The design levels of basic, modified, and full (B, M, and F) were used to develop the design matrices. Each design level is based on the investment intended for the highway system and Project Type. (For example, the investment is higher for an Interstate overlay than for an overlay on a non-NHS route.)

A **blank cell** on a design matrix row signifies that the Design Element will not be addressed because it is beyond the scope of the typical project. In rare instances, a Design Element with a blank cell may be included if that element is linked to

the original need that generated the project and is identified in the Project Summary or a Project Control Form.

Basic design level (B) preserves pavement structures, extends pavement service life, and maintains safe operations of the highway. See Chapter 410 for design guidance.

Modified design level (M) preserves and improves existing roadway geometrics, safety, and operational elements. See Chapter 430 for design guidance. Use full design level for design elements or portions of design elements that are not covered in Chapter 430.

Full design level (F) improves roadway geometrics, safety, and operational elements. See Chapter 440 and other applicable *Design Manual* chapters for design guidance.

(4) Design Variances

Types of design variances are design exceptions (DE), evaluate upgrades (EU), and deviations. See Chapter 330 concerning the Design Variance Inventory System (DVIS).

A **design exception (DE)** in a matrix cell indicates that WSDOT has determined that the Design Element is usually outside the scope of the Project Type. Therefore, an existing condition that does not meet or exceed the design level specified in the matrix may remain in place unless a need has been identified in the *Highway System Plan* and prioritized in accordance with the programming process. See Chapter 330 regarding documentation.

An **evaluate upgrade (EU)** in a matrix cell indicates that WSDOT has determined that the Design Element is an item of work that is to be considered for inclusion in the project. For an existing element that does not meet or exceed the specified design level, an analysis is required to determine the impacts and cost effectiveness of including the element in the project. The EU analysis must support the decision regarding whether or not to upgrade that element. See Chapter 330 regarding documentation.

A **deviation** is required when an existing or proposed Design Element differs from the specified design level for the project and neither DE nor EU processing is indicated. See Chapter 330 regarding documentation.

DE or EU with /F or /M in a cell means that the Design Element is to be analyzed with respect to the specified design level. For instance, a DE/F is analyzed with respect to full design level and might be recorded as having an existing Design Element that does not meet or exceed current full design level. An EU/M is analyzed to decide whether or not to upgrade any existing Design Element that does not meet or exceed current modified design level.

(5) Terminology in Notes

F/M Full for freeways/Modified for nonfreeway uses the word **freeway** to mean a divided highway facility that has a minimum of two lanes in each direction, for the exclusive use of traffic, and with full control of access. For matrix cells with an F/M designation, analyze freeway routes at full design level and nonfreeway routes at modified design level.

The **HAL, HAC, and PAL** mentioned in note (1) on Design Matrices 3, 4, and 5 are high accident locations (HAL), high accident corridors (HAC), and pedestrian accident locations (PAL).

The **Access Control Tracking System** mentioned in note (3) on Design Matrices 3, 4, and 5 is a list that is available on the web at http://www.wsdot.wa.gov/eesc/design/access/ under the RELATED SITES heading. See Chapter 1420 for access control basics and 1430 and 1435 for limited and managed access, respectively.

The **corridor or project analysis** mentioned in notes (2) and (4) on Design Matrices 3, 4, and 5 is the justification needed to support a change in design level from the indicated design level. The first step is to check for recommendations for future improvements in an approved Route Development Plan. If none are available, an analysis can be based on route continuity and other existing features. See Chapter 330 regarding documentation.

Note **(21) Analyses required** appears only on Design Elements for Risk projects on Design Matrices 3, 4, and 5. These Design Elements are to be evaluated using benefit/cost (B/C) to compare and rank each occurrence of the Design Elements. The B/C evaluation supports engineering decisions regarding which proposed solutions are included in a Risk project.

Proposed solutions with a B/C ratio less than 1.0 may be included in the project based on engineering judgment of their significant contribution to corridor continuity. Most components of a Risk project will have a B/C of 1.0 or more, however, some with a ratio greater than 1.0 may be excluded in favor of funding other elements with higher B/C ratios or other projects with higher aggregate ratios. The analyses, design decisions, and program funding decisions are to be documented in the Design Documentation Package.

State Route	NHS Route Description	Beginning SR MP	Begin ARM	Ending SR MP	End ARM
US 2	I-5 to Idaho State Line	0.00	0.00	334.51	326.64
US 2 Couplet	Everett Couplet	0.00	0.00	1.64	0.87
US 2 Couplet	Brown Street Couplet	287.45	0.00	288.08	0.63
US 2 Couplet	Division Street Couplet	289.19	0.00	290.72	1.53
SR 3	US 101 to SR 104	0.00	0.00	60.02	59.81
SR 4	US 101 to I-5	0.00	0.00	62.28	62.27
I-5	Oregon State Line to Canadian Border	0.00	0.00	276.56	276.62
SR 8	US 12 to US 101	0.00	0.00	20.67	20.67
SR 9	SR 546 to Canadian Border	93.61	93.52	98.17	98.08
SR 9 Spur	Sumas Spur	98.00	0.00	98.25	0.24
SR 11	I-5 to Alaskan Ferry Terminal	19.93	19.93	21.28	21.28
US 12	US 101 to Idaho State Line	0.00	0.00	434.19	430.76
US 12 Couplet	Aberdeen Couplet	0.33	0.00	0.68	0.35
SR 14	I-5 to US 97	0.00	0.00	101.02	100.93
SR 14 Spur	Maryhill Spur	100.66	0.00	101.05	0.39
SR 16	I-5 to SR 3	0.00	0.00	29.19	27.01
SR 16 Spur	SR 16 to SR 3	28.74	0.00	29.13	0.39
SR 17	US 395 to I-90	7.43	0.00	50.89	43.40
SR 18	So. Federal Way Park & Ride to I-5	2.20B	0.00	0.00	0.53
SR 18	I-5 to I-90	0.00	0.53	27.91	28.41
SR 20	US 101 to I-5	0.00	0.00	59.54	59.49
SR 20 Spur	SR 20 to San Juan Ferry	47.89	0.00	55.67	7.78
SR 22	US 97 to I-82	0.70	0.00	4.00	3.31
SR 26	I-90 to US 195	0.00	0.00	133.53	133.61
SR 26 Spur	SR 26 to US 195	133.44	0.00	133.51	0.07
SR 28	US 2 to SR 281	0.00B	0.00	29.77	33.91
I-82	I-90 to Oregon State Line	0.00	0.00	132.60	132.57
I-90	I-5 to Idaho State Line	1.94	0.00	299.82	297.52
I-90 Reverse Lane	Reversible lane	1.99	0.00	9.44	7.45
SR 96	McCollum Park and Ride to I-5	0.00	0.00	0.52	0.52
US 97	Oregon State Line to SR 22	0.00B	0.00	61.44	61.30
US 97	I-90 to Canadian Border	133.90	118.80	336.48	321.62
US 97 Couplet	Maryhill Couplet	2.59	0.00	2.68	0.09
US 97 Spur	US 97 to US 2 (Orondo)	213.36	0.00	213.62	0.26
US 97 Y	SR 970 to US 97				
SR 99	188th to SeaTac Airport	18.35	14.70	18.77	15.12
SR 99	SR 509 to SR 104	26.04	22.40	43.60	39.84
US 101	Oregon State Line to SR 401	0.00	0.00	0.46	0.46
US 101	SR 4 to I-5	28.89	28.89	367.41	365.78
US 101 Couplet	Aberdeen Couplet	87.49	0.00	91.66	4.17
US 101 Couplet	Port Angeles Couplet	249.65	0.00	251.32	1.67
SR 104	US 101 to I-5	0.20	0.00	29.67	29.14
SR 109	Pacific Beach Access	0.00	0.00	30.25	30.29
SR 125	Oregon State Line to US 12	0.00	0.00	6.09	6.08
SR 125 Spur	SR 125 to US 12	6.09	0.00	6.76	0.67
SR 127	US 12 to SR 26	0.03	0.00	27.05	27.05
SR 128	US 12 to Idaho State Line	0.00	0.00	2.30	2.30

NHS Highways in Washington
Figure 325-2a

State Route	NHS Route Description	Beginning SR MP	Begin ARM	Ending SR MP	End ARM
SR 166	Naval Fuel Depot	0.02	0.00	3.40	3.38
SR 167	I-5 to I-405	0.00	0.00	27.28	28.60
I-182	I-82 to US 395	0.00	0.00	15.19	15.19
US 195	Idaho State Line to I-90	0.00B	0.00	95.99	93.37
US 195 Spur	US 195 to Idaho State Line	0.06	0.00	0.60	0.54
I-205	Oregon State Line to I-5	26.59	0.00	37.16	10.57
SR 240	Hanford Access	30.63	28.86	34.87	33.10
SR 270	US 195 to Idaho	0.00	0.00	9.89	9.89
SR 270	Pullman Couplet	2.67	0.00	2.90	0.23
SR 270	US 195 Y Connection	0.00	0.00	0.38	0.38
SR 281	SR 28 to I-90	0.00	0.00	10.55	10.55
SR 281 Spur	SR 281 to I-90	2.65	0.00	4.34	1.69
SR 303	SR 3 to SR 304	0.00B	0.00	8.73	8.89
SR 304	SR 16 to Bremerton Ferry	0.00	0.00	3.51	3.24
SR 305	SR 3 to Winslow Ferry	0.02	0.00	13.52	13.50
SR 307	SR 305 to SR 104	0.00	0.00	5.25	5.25
SR 310	SR 3 to SR 304	0.00	0.00	1.84	1.84
US 395	Congressional High Priority Route	13.05	13.05	270.26	275.09
SR 401	US 101 to SR 4	0.00	0.00	12.13	12.13
I-405	I-5 to I-5	0.00	0.00	30.32	30.30
SR 432	SR 4 to I-5	0.00	0.00	10.33	10.32
SR 433	Oregon State Line to SR 432	0.00	0.00	0.94	0.94
SR 500	I-5 to SR 503	0.00	0.00	5.96	5.96
SR 501	I-5 to Port of Vancouver	0.00	0.00	3.83	3.42
SR 502	I-5 to SR 503	0.00B	0.00	7.56	7.58
SR 503	SR 500 to SR 502	0.00	0.00	8.09	8.09
SR 509	SR 99 to 12th Place S	24.35B	26.13	29.83	33.11
SR 509	Pacific Ave. to Marine View Drive	0.22	1.44	3.20	4.42
SR 512	I-5 to SR 167	0.00	0.00	12.06	12.06
SR 513	Sandpoint Naval Air Station	0.00	0.00	3.35	3.35
SR 516	I-5 to SR 167	2.03	2.02	4.72	4.99
SR 518	I-5 to SR 509	0.00	0.00	3.81	3.42
SR 519	I-5 to Seattle Ferry Terminal	0.00	0.00	1.14	1.14
SR 520	I-5 to SR 202	0.00	0.00	12.83	12.82
SR 522	I-5 to US 2	0.00	0.00	24.68	24.68
SR 524	Lynnwood Park and Ride to I-5	4.64	4.76	5.20	5.32
SR 524 Spur	Cedar Way Spur - Lynnwood Park and Ride to I-5	4.64	0.00	5.14	0.50
SR 525	I-5 to SR 20	0.00	0.00	30.49	30.72
SR 526	SR 525 to I-5	0.00	0.00	4.52	4.52
SR 529	Everett Homeport	0.00	0.00	2.20	2.20
SR 539	I-5 to Canadian Border	0.00	0.00	15.16	15.16
SR 543	I-5 to Canadian Border	0.00	0.00	1.09	1.09
SR 546	SR 539 to SR 9	0.00	0.00	8.02	8.02
I-705	I-5 to Schuster Parkway	0.00	0.00	1.50	1.50
SR 970	I-90 to US 97	0.00	0.00	10.31	10.31
SR 970 Y	Y connection to US 97	0.00	0.00	0.10	0.10

NHS Highways in Washington

Figure 325-2b

⇩ Project Type																Bridges			Barriers		
Design Elements ⇨	Horiz. Align.	Vert. Align.	Lane Width	Shldr Width (13)	On/Off Conn.	Median Width	Cross Slope Lane	Cross Slope Shldr	Fill/Ditch Slopes	Clear Zone	Sign. (10)	Delini. (9)	Illumin.	Vert. Clear. (11)	Bike & Ped.	Lane Width	Shldr Width	Structural Capacity	Term. & Trans. Section (12)	Std Run	Bridge Rail (14)(19)
(1-1) Preventive Maintenance																					
Pavement Restoration																					
(1-2) Diamond Grinding										EU	EU	F		DE					F	EU	F
(1-3) Milling with HMA Inlays									EU	F	EU	F		DE					F	EU	F
(1-4) Nonstructural Overlay				DE			EU	EU	EU	F	EU	F		EU					F	F	F
Pavement Rehab./Resurf.																					
(1-5) ACP Structural Overlays	EU	DE	F	F	F(17)	DE	F	EU	F	F	EU	F	F	F		F	DE		F	F	F
(1-6) PCCP Overlays	EU	DE	F	F	F(17)	DE	F	EU	F	F	EU	F	F	F		F	DE		F	F	F
(1-7) Dowel Bar Retrofit	EU	DE	F	F	F(17)	DE	DE		F	F	EU	F	F	DE			DE		F	F	F
Bridge Rehabilitation																					
(1-8) Bridge Deck Rehabilitation												F		F		F	DE	(11)	F (6)	F(22)	F
Safety																					
(1-9) Median Barrier				DE															F	F	
(1-10) Guardrail Upgrades				DE						F									F	F	
(1-11) Bridge Rail Upgrades																			F	F(22)	F
Reconstruction (16)																					
(1-12) New/Reconstruction	F	F	F	F	F	F	F	F	F	F	F	F	F	F	F	F	F	F	F	F	F

☐ Not Applicable
F Full design level. See Chapter 440.
DE Design Exception to full design level.
EU Evaluate Upgrade to full design level.

(6) Applies only to bridge end terminals and transition sections.
(9) Continuous shoulder rumble strips required in rural areas. See Chapter 700.
(10) See Chapter 820.
(11) See Chapter 1120.
(12) Impact attenuators are considered as terminals.
(13) See Chapters 440 and 640.
(14) Includes crossroad bridge rail. See Chapter 710.

(16) For design elements not in the matrix headings, apply full design level as found in the applicable chapters and see 325.03(2).
(17) DE for existing acceleration/deceleration lanes when length meets posted freeway speed and no significant accidents. See Chapter 940.
(19) The funding sources for bridge rail are a function of the length of the bridge. Consult programming personnel.
(22) Upgrade barrier, if necessary, within 200 ft of the end of the bridge.

Design Matrix 1
Interstate Routes (Main Line)
Figure 325-3

⇩ Project Type	Ramps and Collector Distributors																				Cross Road										
															Ramp Terminals			Barriers											Barriers		
Design Elements ⇨	Horiz. Align.	Vert. Align.	Lane Width	Shldr Width	Lane Tran-sition	On/Off Conn.	Cross Slope Lane	Cross Slope Shldr	Fill/ Ditch Slopes	Limited Access	Clear Zone	Sign., Del., Illumin. (9)(10)	Vertical Clear. (11)	Bike & Ped.	Turn Radii	Angle	I/S Sight Dist.	Term. & Trans. Section (12)	Std Run	Bridge Rail (14)(19)	Lane Width	Shldr Width	Fill/ Ditch Slopes	Limited Access	Clear Zone	Sign., Del., Illumin.	Vert. Clear. (11)	Ped. & Bike	Term. & Trans. Section (12)	Std Run	Bridge Rail (14)(19)
(2-1) Preventive Maintenance																															
Pavement Restoration																															
(2-2) Diamond Grinding											EU	F(15)						F	EU	F					EU	F(15)			F	EU	F
(2-3) Milling with HMA Inlays									EU		F	F(15)	F					F	F	F			EU		F	F(15)			F	F	F
(2-4) Nonstructural Overlay							EU	EU	EU		F	F(15)	F					F	F	F			EU		F	F(15)			F	F	F
Pavement Rehab./Resurf.																															
(2-5) ACP Structural Overlays	EU	DE	F	F	F	F(17)	F	EU	F	F	F	F(15)	F		F	F	F	F	F	F	DE	DE	DE	F	F	F(15)	F	DE	F	F	F
(2-6) PCCP Overlays	EU	DE	F	F	F	F(17)	F	EU	F	F	F	F(15)	F		F	F	F	F	F	F	DE	DE	DE	F	F	F(15)	F	DE	F	F	F
(2-7) Dowel Bar Retrofit	DE		DE	DE	F	F(17)	DE		F	F	F	F(15)	DE		F	F	F	F	F	F				F		F(15)			F	F	F
Bridge Rehabilitation																															
(2-8) Bridge Deck Rehabilitation													F					F(6)	F(22)	F							F		F(6)	F(22)	F
Safety																															
(2-9) Guardrail Upgrades				DE							F							F	F										F	F	
(2-10) Bridge Rail Upgrades																		F	F(22)	F									F	F(22)	F
Reconstruction (16)																															
(2-11) New/Reconstruction	F	F	F	F	F	F	F	F	F	F	F	F	F	F	F	F	F	F	F	F	F	F	F	F	F	F	F	F	F	F	F

☐ Not Applicable
F Full design level. See Chapter 440.
DE Design Exception to full design level.
EU Evaluate Upgrade to full design level.

(6) Applies only to bridge end terminals and transition sections.
(9) Continuous shoulder rumble strips required in rural areas. See Chapter 700.
(10) See Chapter 820.
(11) See Chapter 1120.
(12) Impact attenuators are considered as terminals.
(14) Includes crossroad bridge rail. See Chapter 710.
(15) EU for signing and illumination.

(16) For design elements not in the matrix headings, apply full design level as found in the applicable chapters and see 325.03(2).
(17) DE for existing acceleration/deceleration lanes when length meets posted freeway speed and no significant accidents. See Chapter 940.
(19) The funding sources for bridge rail are a function of the length of the bridge. Consult programming personnel.
(22) Upgrade barrier, if necessary, within 200 ft of the end of the bridge.

Design Matrix 2
Interstate Interchange Areas
Figure 325-4

⇩ Project Type																Bridges (11)				Intersections			Barriers		
Design Elements ⇨	Horiz. Align.	Vert. Align.	Lane Width	Shldr Width	Lane Tran-sition	On/Off Conn.	Median Width	Cross Slope Lane	Cross Slope Shldr	Fill/ Ditch Slopes	Access (3)	Clear Zone (18)	Sign., Del., Illumin.	Basic Safety	Bike & Ped.	Lane Width	Shldr Width	Vertical Clear-ance	Structural Capacity	Turn Radii	Angle	I/S Sight Dist.	Term. & Trans. Section (12)	Std Run	Bridge Rail (14)(19)
Preservation																									
Roadway																									
(3-1) Non-Interstate Freeway	DE/F	DE/F	DE/F	DE/F	DE/F	DE/F	DE/F	DE/F	DE/F	DE/F	DE/F		B	B		DE/F	DE/F	F					B	B	F
(3-2) HMA/PCCP/BST Overlays	DE/M	DE/M	DE/M	DE/M	DE/F	DE/F	DE/M	DE/M	DE/M	DE/M			B	B		DE/M	DE/M	F				B	B	B	F
(3-3) Replace HMA w/ PCCP at I/S	DE/M	DE/M	EU/M	EU/M	DE/F		DE/M	EU/M	DE/M	DE/M			B	B		DE/M	DE/M	F				B	B	B	F
Structures																									
(3-4) Bridge Replacement	F (2)	F (2)	F (2)	F (2)	F	F (2)	F (2)	F (2)	F (2)	F (2)		F	F		F	F (2)	F (2)	F	F	F (2)	F (2)	F	F	F	F
(3-5) Bridge Deck Rehab.													B	B				F					F(6)	F(22)	F
Improvements (16)																									
Mobility																									
(3-6) Non-Interstate Freeway	F	F	F	F	F	F	F	F	F	F	F	F	F		F	F	F	F	F	F	F	F	F	F	F
(3-7) Urban	F (2)	F (2)	F (2)	F (2)	F	F (2)	F (2)	F (2)	F (2)	F (2)	F	F	F		F	F (2)	F (2)	F	F	F (2)	F (2)	F	F	F	F
(3-8) Rural	F (2)	F (2)	F (2)	F (2)	F	F (2)	F (2)	F (2)	F (2)	F (2)	F	F	F		F	F (2)	F (2)	F	F	F (2)	F (2)	F	F	F	F
(3-9) HOV	F (2)	F (2)	F (2)	F (2)	F	F (2)	F (2)	F (2)	F (2)	F (2)	F	F	F		F	F (2)	F (2)	F	F	F (2)	F (2)	F	F	F	F
(3-10) Bike/Ped. Connectivity	(5)	(5)	(5)	(5)	(5)			(5)	(5)	(5)	(5)	(5)	(5)		F	(5)	(5)	(5)	(5)	(5)	(5)	(5)	(5)	(5)	(5)
Safety																									
(3-11) Non-Interstate Freeway	F	F	F	F	F	F	F	F	F	F	F	F	F		F	F	F	F		F	F	F	F	F	F
(3-12) Intersection (1)			F(2)	F(2)	F					F (2)	F	F	F							F	F	F	F	F	F
(3-13) Corridor (1)(24)	M(4)	M(4)	M(4)	M(4)	F	F(17)	M(4)	M(4)	M(4)	M(4)	EU/F	F	F		F	M(4)	M(4)	F		M(4)	M(4)	F	F	F	F
(3-14) Median Barrier				DE/F																			F(20)	F(20)	
(3-15) Guardrail Upgrades				DE/F																			F	F(23)	
(3-16) Bridge Rail Upgrades																							F	F(22)	F
(3-17) Risk: Roadside										F	EU/F	F	F										F	F	F
(3-18) Risk: Sight Distance	F/M(21)	F/M(21)	F/M(21)	F/M(21)						F/M(21)		F	F		F	F(21)	F(21)	F		F/M(21)	F/M(21)	F(21)	F	F	F
(3-19) Risk: Roadway Width			F/M(21)	F/M(21)	F(21)	F/M(21)	F/M(21)	F/M(21)	F/M(21)	F/M(21)	EU/F	F	F		F	F(21)	F(21)	F		F/M(21)	F/M(21)	F(21)	F	F	F
(3-20) Risk: Realignment	F(2)	F(2)	F(2)	F(2)	F	F(2)	F(2)	F(2)	F(2)	F(2)	F	F	F		F	F(2)	F(2)	F		F(2)	F(2)	F(2)	F	F	F
Economic Development																									
(3-21) Freight & Goods (Frost Free)(8)	F (2)	F (2)	F (2)	F (2)	F	F (2)	F (2)	F (2)	F (2)	F (2)	EU/F	F	B		EU/F	DE/F	DE/F	F	F	EU/F	EU/F	EU/F	F	F	F
(3-22) Four-Lane Trunk System	F	F	F	F	F	F	F	F	F	F	F	F	F		F	F	F	F	F	F	F	F	F	F	F
(3-23) Rest Areas (New)	F	F	F	F	F	F	F	F	F	F	F	F	F		F	F	F	F		F	F	F	F	F	F
(3-24) Bridge Restrictions	F (2)	F (2)	F (2)	F (2)	F	F (2)	F (2)	F (2)	F (2)	F (2)		F	F		EU/F	F (2)	F (2)	F	F	F (2)	F (2)	F	F	F	F
(3-25) Bike Routes (Shldrs)			EU/M	(7)	EU/F				EU/M	EU/M			B	B	F	EU/M	EU/M	F				B	F	B	EU/F

☐ Not Applicable
F Full design level. See Chapter 440.
M Modified design level. See Chapter 430.
B Basic design level. See Chapter 410.
F/M Full for freeways/Modified for nonfreeway
DE Design Exception
EU Evaluate Upgrade

(1) Collision Reduction (HAL, HAC, PAL), or Collision Prevention (At-Grade Removal, Signalization & Channelization). Specific deficiencies that created the project must be upgraded to design level as stated in the matrix.
(2) Modified design level may apply based on a corridor or project analysis. See 325.03(5).
(3) If designated as L/A acquired in the Access Control Tracking System, limited access requirements apply. If not, managed access applies. See 325.03(5).
(4) Full design level may apply based on a corridor or project analysis. See 32503(5).
(5) For bike/pedestrian design see Chapters 1020 and 1025.
(6) Applies only to bridge end terminals and transition sections.
(7) 4 ft minimum shoulders.
(8) If all weather structure can be achieved with spot digouts and overlay, modified design level applies to NHS highways and basic design level applies to non-NHS highways.
(11) See Chapter 1120.
(12) Impact attenuators are considered as terminals.
(14) Includes crossroad bridge rail. See Chapter 710.
(16) For design elements not in the matrix headings, apply full design level as found in the applicable chapters and see 325.03(2).
(17) DE for existing acceleration/deceleration lanes when length meets posted freeway speed and no significant accidents. See Chapter 940.
(18) On managed access highways within the limits of incorporated cities and towns, City and County Design Standards apply to areas outside the curb or outside the paved shoulder where no curb exists.
(19) The funding sources for bridge rail are a function of the length of the bridge. Consult programming personnel.
(20) Applies to median elements only.
(21) Analyses required. See 325.03(5) for details.
(22) Upgrade barrier, if necessary, within 200 ft of the end of the bridge.
(23) See description of Guardrail Upgrades Project Type, 325.03(1) regarding length of need.
(24) Apply Full design level to projects that realign or reconstruct significant portions of the alignment.

Design Matrix 3
Main Line NHS Routes (Except Interstate)
Figure 325-5

⇩ Project Type	Ramps and Collector Distributors																				Cross Road											
															Ramp Terminals			Barriers													Barriers		
Design Elements ⇨	Horiz. Align.	Vert. Align.	Lane Width	Shldr Width	Lane Tran-sition	On/Off Conn.	Cross Slope Lane	Cross Slope Shldr	Fill/ Ditch Slopes	Access (3)	Clear Zone	Sign, Del., Illumin.	Basic Safety	Bike & Ped.	Turn Radii	Angle	I/S Sight Dist.	Term. & Trans. Section (12)	Std Run	Bridge Rail (14)(19)	Lane Width	Shldr Width	Fill/ Ditch Slopes	Access (3)	Clear Zone	Sign., Del., Illumin.	Basic Safety	Vert. Clear. (11)	Ped. & Bike	Term. & Trans. Section (12)	Std . Run	Bridge Rail (14)(19)
Preservation																																
Roadway																																
(4-1) Non-Interstate Freeway	DE/F	DE/F	DE/F	DE/F	DE/F	DE/F	DE/F	DE/F	DE/F	DE/F		B	B		DE/F	DE/F	DE/F	B	B	F	DE/F	DE/F	DE/F			B	B	F		B	B	F
(4-2) HMA/PCCP/BST Overlays Ramps												B	B				B	B	B	F						B	B	F		B	B	F
Structures																																
(4-3) Bridge Replacement	F (2)	F (2)	F (2)	F (2)	F	F (2)	F (2)	F (2)	F (2)	F	F	F		F	F	F	F	F	F	F	F (2)	F (2)	F (2)	F	F	F		F	F	F	F	F
(4-4) Bridge Deck Rehab.												B	B					B (6)	F(22)	F						B	B	F		F(6)	F(22)	F
Improvements (16)																																
Mobility																																
(4-5) Non-Interstate Freeway	F	F	F	F	F	F	F	F	F	F	F	F		F	F	F	F	F	F	F	F	F	F	F	F	F		F	F	F	F	F
(4-6) Urban	F (2)	F (2)	F (2)	F (2)	F	F (2)	F (2)	F (2)	F (2)	F	F	F		F	F (2)	F (2)	F	F	F	F	F (2)	F (2)	F (2)	F	F	F		F	F	F	F	F
(4-7) Rural	F (2)	F (2)	F (2)	F (2)	F	F (2)	F (2)	F (2)	F (2)	F	F	F		F	F (2)	F (2)	F	F	F	F	F (2)	F(2)	F (2)	F	F	F		F	F	F	F	F
(4-8) HOV By Pass	F (2)	F (2)	F (2)	F (2)	F	F (2)	F (2)	F (2)	F (2)	F	F	F		F	F (2)	F (2)	F	F	F	F	F (2)	F (2)	F (2)	F	F	F		F	F	F	F	F
(4-9) Bike/Ped. Connectivity	(5)	(5)	(5)	(5)	(5)		(5)	(5)	(5)	(5)	(5)	(5)		F	(5)	(5)	(5)	(5)	(5)	(5)	(5)	(5)	(5)			(5)		(5)	F	(5)	(5)	(5)
Safety																																
(4-10) Non-Interstate Freeway	F	F	F	F	F	F	F	F	F	F	F	F			F	F	F	F	F	F	F	F	F	F	F	F		F		F	F	F
(4-11) At Grade (1)(25)	F (2)	F (2)	F (2)	F (2)	F	F (2)	F (2)	F (2)	F (2)	F	F	F		F	F (2)	F (2)	F	F	F	F	F (2)	F (2)	F (2)	F	F	F		F	F	F	F	F
(4-12) Intersection (1)			F(2)	F(2)	F					F	F	F			F	F	F	F	F	F				F	F	F		F		F	F	F
(4-13) Guardrail Upgrades				DE/F														F	F											F	F(23)	
(4-14) Bridge Rail Upgrades																														F	F(22)	F
(4-15) Risk: Roadside										F	EU/F	F													EU/F					F	F	F
(4-16) Risk: Sight Distance	F/M(21)	F/M(21)								F/M(21)		F		F	F/M(21)	F/M(21)	F	F	F	F				F/M(21)				F/M(21)	F			
(4-17) Risk: Roadway Width			F/M(21)	F/M(21)	F	F/M(21)	F/M(21)	F/M(21)	F/M(21)	F/M(21)	F/M(21)	F		F	F/M(21)	F/M(21)	F	F	F	F	F/M(21)	F/M(21)	F/M(21)	F/M(21)	EU/F				F	F	F	F
(4-18) Risk: Realignment	F/M(21)	F/M(21)	F/M(21)	F/M(21)	F	F/M(21)	F/M(21)	F/M(21)	F/M(21)	F/M(21)	F/M(21)	F		F	F/M(21)	F/M(21)	F	F	F	F	F/M(21)	F/M(21)	F/M(21)	F/M(21)	EU/F			F/M(21)	F	F	F	F
Economic Development																																
(4-19) Four-Lane Trunk Syster	F	F	F	F	F	F	F	F	F	F	F	F		F	F	F	F	F	F	F	F	F	F	F	F	F		F		F	F	F

☐ Not Applicable
F Full design level. See Chapter 440.
M Modified design level. See Chapter 430.
B Basic design level. See Chapter 410.
F/M Full for freeways/Modified for nonfreeway
DE Design Exception
EU Evaluate Upgrade

(1) Collision Reduction (HAL, HAC, PAL); or Collision Prevention (At-Grade Removal, Signalization & Channelization). Specific deficiencies that created the project must be upgraded to design level as stated in the matrix.
(2) Modified design level may apply based on a corridor or project analysis. See 325. 03(5).
(3) If designated as L/A acquired in the Access Control Tracking System, limited access requirements apply. If not, managed access applies. See 325.03(5).
(4) Full design level may apply based on a corridor or project analysis. See 325. 03(5).
(5) For bike/pedestrian design see Chapters 1020 and 1025.
(6) Applies only to bridge end terminals and transition sections.
(11) See Chapter 1120.
(12) Impact attenuators are considered as terminals.
(14) Includes crossroad bridge rail. See Chapter 710.
(16) For design elements not in the matrix headings, apply full design level as found in the applicable chapters and see 325.03(2).
(19) The funding sources for bridge rail are a function of the length of the bridge. Consult programming personnel.
(21) Analyses required. See 325.03(5) for details.
(22) Upgrade barrier, if necessary, within 200 ft of the end of the bridge.
(23) See description of Guardrail Upgrades Project Type, 325.03(1) regarding length of need.
(25) For main line, use the Project Type row for Safety, Non-Interstate Freeway on Matrix 3 for NHS and on Matrix 5 for non-NHS.

Design Matrix 4
Interchange Areas, NHS (Except Interstate) and Non-NHS
Figure 325-6

⇩ Project Type															Bridges (11)				Intersections			Barriers		
Design Elements ⇨	Horiz. Align.	Vert. Align.	Lane Width	Shldr Width	Lane Tran-sition	Median Width	Cross Slope Lane	Cross Slope Shldr	Fill/ Ditch Slopes	Access (3)	Clear Zone (18)	Sign, Del., Illumin.	Basic Safety	Bike & Ped.	Lane Width	Shldr Width	Vertical Clear.	Structural Capacity	Turn Radii	Angle	I/S Sight Dist.	Term. & Trans. Section (12)	Std Run	Bridge Rail (19)
Preservation																								
Roadway																								
(5-1) HMA/PCCP												B	B				F				B	B	B	F
(5-2) BST																								
(5-3) BST Routes/Basic Safety												B	B								B	B	B	F
(5-4) Replace HMA with PCCP at I/S			EU/M	EU/M		EU/M	EU/M					B	B				F					B	B	F
Structures																								
(5-5) Bridge Replacement	M	F	M	M	F		M	M	M		F	F		F	F (2)	F (2)	F	F	M	M	F	F	F	F
(5-6) Bridge Repl. (Multilane)	F (2)	F (2)	F (2)	F (2)	F	F (2)	F (2)	F (2)	F (2)		F	F		F	F (2)	F (2)	F	F	F (2)	F (2)	F	F	F	F
(5-7) Bridge Deck Rehab												B	B									F(6)	F(22)	F
Improvements (16)																								
Mobility																								
(5-8) Urban (Multilane)	F (2)	F (2)	F (2)	F (2)	F	F (2)	F (2)	F (2)	F (2)	F	F	F		F	F (2)	F (2)	F	F	EU/F	EU/F	F	F	F	F
(5-9) Urban	M	M	M	M	F		M	M	M	F	F	F		F	M	M	F	F	EU/M	EU/M	F	F	F	F
(5-10) Rural	M	M	M	M	F	M	M	M	M	F	F	F		F	M	M	F	F	EU/M	EU/M	F	F	F	F
(5-11) HOV	M	M	M	M	F	M	M	M	M	F	F	F		F	M	M	F	F	EU/M	EU/M	F	F	F	F
(5-12) Bike/Ped. Connectivity	(5)	(5)	(5)	(5)	(5)	(5)	(5)	(5)	(5)	(5)	(5)	(5)		F	(5)	(5)	(5)	(5)	(5)	(5)	(5)	(5)	(5)	(5)
Safety																								
(5-13) Non-Interstate Freeway	F (2)	F (2)	F (2)	F (2)	F (2)	F (2)	F (2)	F (2)	F (2)	F	F	F		F	F (2)	F (2)	F		F (2)	F (2)	F	F	F	F
(5-14) Intersection (1)			M (4)	M (4)	F				M(4)	F	F	F							M (4)	M (4)	M (4)	F	F	F
(5-15) Corridor (1)	M (4)	M (4)	M (4)	M (4)	F	M (4)	M (4)	M (4)	M (4)	F	F	F			M (4)	M (4)	F		M (4)	M (4)	M (4)	F	F	F
(5-16) Median Barrier				DE/F																		F(20)	F(20)	
(5-17) Guardrail Upgrades				DE/F																		F	F(23)	
(5-18) Bridge Rail Upgrades																						F	F(22)	F
(5-19) Risk: Roadside											F	F										F	F	F
(5-20) Risk: Sight Distance	F/M(21)	F/M(21)								F(21)		F		F	F(21)	F(21)	F(21)		F/M(21)	F/M(21)	F(21)	F	F	F
(5-21) Risk: Roadway Width			F/M(21)	F/M(21)	F	F/M(21)	F/M(21)	F/M(21)	F/M(21)	F(21)	F	F		F	F(21)	F(21)	F(21)		F/M(21)	F/M(21)	F(21)	F	F	F
(5-22) Risk: Realignment	F/M(21)	F/M(21)	F/M(21)	F/M(21)	F	F/M(21)	F/M(21)	F/M(21)	F/M(21)	F(21)	F	F		F	F(21)	F(21)	F(21)		F/M(21)	F/M(21)	F(21)	F	F	F
Economic Development																								
(5-23) Freight & Goods (Frost Free) (8)	EU/M	EU/M	EU/M	EU/M	EU/F	EU/M	M	M	EU/M		F	B	B	EU/F	EU/M	EU/M	F		EU/M	EU/M	EU/F	F	B	F
(5-24) Rest Areas (New)	F	F	F	F	F	F	F	F	F	F	F	F		F	F	F			F	F	F	F	F	F
(5-25) Bridge Restrictions	M	F	M	M	F	M	M	M	M		F	F		EU/F	M	M	F	F	M	M	F	F	F	F
(5-26) Bike Routes (Shldrs)			EU/M	(7)	EU/F			EU/M	EU/M			B	B	F	EU/M	EU/M					B	F	B	EU/F

☐ Not Applicable
F Full design level. See Chapter 440.
M Modified design level. See Chapter 430.
F/M Full for freeways/Modified for nonfreeway
B Basic design level. See Chapter 410.
DE Design Exception
EU Evaluate Upgrade

(1) Collision Reduction (HAL, HAC, PAL), or Collision Prevention (At Grade Removal, Signalization & Channelization). Specific deficiencies that created the project must be upgraded to design level as stated in the matrix.
(2) Modified design level may apply based on a corridor or project analysis. See 325.03(5).
(3) If designated as L/A acquired in the Access Control Tracking System, limited access requirements apply. If not, managed access applies. See 325.03(5).
(4) Full design level may apply based on a corridor or project analysis. See 325.03(5).
(5) For bike/pedestrian design see Chapters 1020 and 1025.
(6) Applies only to bridge end terminals and transition sections.
(7) 4 ft minimum shoulders.
(8) If all weather structure can be achieved with spot digouts and overlay, modified design level applies to NHS highways and basic design level applies to non-NHS highways.

(11) See Chapter 1120.
(12) Impact attenuators are considered as terminals.
(16) For design elements not in the matrix headings, apply full design level as found in the applicable chapters and see 325.03(2).
(18) On managed access highways within the limits of incorporated cities and towns, City and County Design Standards apply to areas outside the curb or outside the paved shoulder where no curb exists.
(19) The funding sources for bridge rail are a function of the length of the bridge. Consult programming personnel.
(20) Applies to median elements only.
(21) Analyses required. See 325.03(5) for details.
(22) Upgrade barrier, if necessary, within 200 ft of the end of the bridge.
(23) See description of Guardrail Upgrades Project Type, 325.03(1) regarding length of need.

Design Matrix 5
Main Line Non-NHS Routes
Figure 325-7

Chapter 330 Design Documentation, Approval, and Process Review

330.01 General
330.02 References
330.03 Definitions
330.04 Design Documentation
330.05 Project Development
330.06 Scoping Phase
330.07 FHWA Approval
330.08 Design Approval
330.09 Process Review

330.01 General

The project file contains the documentation of planning, scoping, programming, design, approvals, contract assembly, utility relocation, needed right of way, advertisement, award, construction, and maintenance review comments for a project. A project file is completed for all projects and is retained by the region office responsible for the project. Responsibility for the project will shift from one office to another during the life of a project. The project file follows the project, as the project responsibility shifts from office to office. Portions of the project file that are not designated as components of the Design Documentation Package may be purged when retention of the construction records is no longer necessary.

The Design Documentation Package is a part of the project file. It documents and justifies design decisions and the design process followed. The Design Documentation Package is retained in a permanent, retrievable file for a period of 75 years, in accordance with WSDOT records retention policy.

For operational changes and developer projects, design documentation is required and is retained by the region office responsible for the project, in accordance with WSDOT records retention policy. All participants in the design process must provide the appropriate documentation for their decisions.

330.02 References

Code of Federal Regulations (CFR) 23 CFR 635.111 "Tied bids"

23 CFR 635.411 "Material or product selection"

Revised Code of Washington (RCW) 47.28.030 Contracts -- State forces -- Monetary limits -- Small businesses, minority, and women contractors -- Rules.

RCW 47.28.035 Cost of project, defined.

Washington Federal-Aid Stewardship Agreement, as implemented in the design matrices (Chapter 325)

Executive Order E 1010.00, "Certification of Documents by Licensed Professionals," WSDOT

Directional Documents Index, D 00-00, WSDOT

Advertisement and Award Manual, M 27-02, WSDOT

Hydraulics Manual, M 23-03, WSDOT

Master Plan for Limited Access Highways, WSDOT

Plans Preparation Manual, M 22-31, WSDOT

Route Development Plan, WSDOT

Washington State Highway System Plan, WSDOT

330.03 Definitions

Design Approval Documented approval of the Design Documentation Package through signature of a designated representative of the approving organization as shown in Figures 330-2a and 330-2b. This documentation becomes part of the Design Documentation Package. If federal funds are involved, Design Approval is required in order to begin right of way acquisition.

Design Concurrence An incremental Design Approval by the designated representative of the approving organization shown in Figures 330-2a and 330-2b. The Project Summary documents must be submitted to the designated approval authority before Design Concurrence can be granted. The primary purpose of Design Concurrence is for work order authorization to establish funding for preliminary engineering.

DE A design exception. Preauthorization to omit correction of an existing design element for various types of projects, as designated in the design matrices. See Chapter 325. A DE designation indicates that the design element is normally outside the scope of the Project Type. See Figure 330-1.

design variance A recorded decision to differ from the design level specified in the *Design Manual*, such as an Evaluate Upgrade (EU) not upgraded, a DE, or a deviation. EUs leading to an upgrade are documented but are not considered to be variances. A project or corridor analysis may also constitute a design variance if that analysis leads to a decision to use a design level or design classification that differs from what the *Design Manual* specifies for the project type.

Design Variance Inventory (DVI) A list of design elements that will not be improved in accordance with the *Design Manual* criteria designated for the project.

Design Variance Inventory System (DVIS) A database application developed to generate the DVI form. The DVIS also provides query functions providing designers an opportunity to search for previously granted variances. The DVIS application can be accessed at www.wsdot.wa.gov/eesc/design/projectdev/

deviation A documented decision granting approval at project specific locations to differ from the design level specified in the *Design Manual*. See Figure 330-1.

environmental documents:

NEPA National Environmental Policy Act

SEPA [Washington] State Environmental Policy Act

CE NEPA: Categorical Exclusion

CE SEPA: Categorical Exception

EA Environmental Assessment

ECS Environmental Classification Summary

EIS Environmental Impact Statement

ERS Environmental Review Summary

FONSI Finding Of No Significant Impact

ROD Record of Decision

EU An evaluate upgrade. A decision making process, requiring evaluation and documentation of whether or not to correct an existing design element as designated in the design matrices. See Figure 330-1.

FHWA Federal Highway Administration

HQ The Washington State Department of Transportation headquarters organization.

Project Control Form A form used to document and approve revisions to project scope, schedule, or budget, from a previously approved Project Definition. There are two versions of the Project Control Form. One version of the form is specifically for projects included in the Nickel Funding Package enacted by the 2003 legislature. The other version of the form is for projects that are not included in the Nickel Funding Package. The form is available at wwwi.wsdot.wa.gov/ppsc/pgmmgt/dpsb/

project file A file containing all documentation and data for all activities related to a project. See 330.01 and 330.04.

Design Documentation Package (DDP) The portion of the project file, including required project approvals, that will be retained long-term, in accordance with the WSDOT document retention policies. Depending on the scope of the project, it contains the Project Summary and some or all of the other documents discussed in this chapter plus technical reports, calculations (quantity calculations are part of the project file, but are not designated as components of the DDP), estimates, justifications for decisions made, and any applicable documents listed in the Design Documentation Check List on the web.

See 330.04(2). The Design Documentation Package explains how and why the design was chosen, and documents approvals. See 330.01.

Project Summary A set of electronic documents consisting of the Environmental Review Summary (ERS), Design Decisions Summary (DDS), and Project Definition (PD). The Project Summary is part of the design documentation required to obtain Design Concurrence and ultimately is part of the design documentation required for Design Approval. See 330.06.

Environmental Review Summary (ERS) An electronic document that records the environmental requirements and considerations for a specific project.

Design Decisions Summary (DDS) An electronic document that records major design decisions regarding roadway geometrics, roadway and roadside features, and other issues that influence the project scope and budget.

Project Definition (PD) An electronic document that records the purpose and need of the project, along with program level and design constraints.

scoping phase The first phase of project development for a specific project. It follows identification of the need for a project and precedes detailed project design. This is the process of identifying the work to be done and developing a cost estimate for completing the design and construction. The Project Summary, engineering and construction estimates, and several technical reports (such as geotechnical, surfacing, bridge condition, etc.) are developed during this phase.

330.04 Design Documentation

(1) Purpose

Design documentation is prepared to record the evaluations by the various disciplines that result in design recommendations. Design assumptions and decisions made prior to and during the scoping phase are included. Changes that occur throughout project development are documented. Justifications and approvals, if required, are also included.

The Design Documentation Package identifies the purpose and need of the project and documents how the project addresses the purpose and need. The required content of the Design Documentation Package is identified in the Design Documentation Check List at www.wsdot.wa.gov/eesc/design/projectdev/

(2) Design Documents

The Design Documentation Package portion of the project file preserves the decision documents generated during the design process. In each package, a summary (list) of the documents is recommended.

The design documents commonly included in the project file and Design Documentation Package for all but the simplest projects are listed in Figure 330-5. For project-specific components, provide documentation in the project file and Design Documentation Package as detailed in the Design Documentation Check List at www.wsdot.wa.gov/eesc/design/projectdev/

Documentation is not required for components not related to the project.

The Design Variance Inventory is required for all projects on NHS highways having design variances and is recommended for all projects having design variances. This form lists all evaluate upgrades (EU) not upgraded to the applicable design level, design exceptions (DE), and deviations as indicated by the design matrices. Also, record variances resulting from a project or corridor analysis in the DVI. Use the Design Variance Inventory System (DVIS) database application to record and manage design variances. The DVIS is available at www.wsdot.wa.gov/eesc/design/projectdev/

The Project Definition (PD) and Environmental Review Summary (ERS) are required for most projects. Exceptions will be identified by the Project Control and Reporting office.

The Design Decisions Summary (DDS) is not required for the following project types unless they involve reconstructing the lanes, shoulders, or fill slopes. Since these and some other project types are not included in the design matrices, evaluate them with respect to modified design level (M) for non-NHS routes and full design level (F) for NHS routes. Include, in the evaluation, only those design elements specifically impacted by the project. Although the following list illustrates some of the project types that do not require a DDS, the list is not intended to be a complete accounting of all such projects. Consult with the Project Control and Reporting office for projects not included in the list.

- Bridge painting
- Crushing and stockpiling
- Pit site reclamation
- Lane marker replacement
- Guide post replacement
- Signal rephasing
- Signal upgrade
- Seismic retrofit
- Bridge joint repair
- Navigation light replacement
- Signing upgrade
- Illumination upgrade
- Rumble strips
- Electrical upgrades
- Major drainage
- Bridge scour
- Fish passage
- Other projects as approved by the HQ Design Office

(3) Certification of Documents by Licensed Professionals

All original technical documents must bear the certification of the responsible licensee. See Executive Order E 1010.00.

(4) Design Exception, Evaluate Upgrade, and Deviation Documentation

DEs, EUs, and deviations are introduced in Chapter 325. See Figure 330-1 for design matrices documentation requirements.

Matrix Cell Content	Project corrects design elements that do not conform to specified design level	Document to file [1]	Record in DVIS [2]
Blank cell in design matrix		No	No
Blank cell in design matrix [3]		DDP	No
Cell Entry			
Full (F), Modified (M), Basic (B) (with no DE or EU qualifiers)	Yes	No	No
	No [4]	Yes [5]	Yes
Design Exception (DE)	Yes [3]	DDP	No
	No	DDP	Yes
Evaluate Upgrade (EU) [5]	Yes	DDP	No
	No	DDP	Yes

DDP = Document to Design Documentation Package

Notes:
[1] See 330.04(3)
[2] See 330.04(2)
[3] May be included in the project in special cases, if identified in the Project Summary or Project Control Form
[4] Nonconformance with specified design level (Chapter 325) requires an approved deviation
[5] Requires supporting justification. (See 330.04(4).)

Design Matrix Documentation Requirements
Figure 330- 1

In special cases, projects may need to address design elements which are shown as blank cells in a design matrix. These special cases must be coordinated with the appropriate Assistant State Design Engineer, and the HQ Project Control and Reporting office. When this is necessary, document the reasons for inclusion of that work in your project.

When the design matrices specify a DE for a design element, the DE documentation must specify the matrix and row, the design element, and the limits of the exception. When a Design Variance Inventory is required for the project, the DE locations must be recorded in the inventory.

All EU decisions must be documented. The EU process determines if an item of work will or will not be done, through analysis of factors such as benefit/cost, route continuity, accident reduction potential, environmental impact, and economic development. Documentation requirements for an EU decision are similar to, but less demanding than, documentation requirements for a deviation. The cost of the improvement must always be considered when making EU decisions. EU examples on the Internet can serve as models for development of EU documentation. The appropriate approval authority for EUs is designated in Figures 330-2a and 330-2b.

Deviation requests are stand-alone documents requiring enough information and project description for an approving authority to make an informed decision of approval or denial. Documentation of a deviation must contain justification and must be approved at the appropriate administrative level as shown in Figures 330-2a and 330-2b. Submit the request as early as possible because approved deviations are needed prior to Design Approval or Intersection/Interchange Plan approval.

When applying for deviation approval, it is necessary to provide two explanations. The first identifies the design element and explains why the design level specified in the design matrices was not or cannot be used. The second provides the justification for the design that is proposed. Justification for a deviation must be supported by at least two of the following:

- Accident history and accident analysis
- Benefit/cost analysis
- Engineering judgment
- Environmental issues
- Route continuity

An element of engineering judgment might be a reference to another publication, with an explanation of why that reference is applicable to the situation encountered on the project. Reference a corridor or project analysis as supporting justification for design deviations dealing with route continuity issues. See Chapter 325.

Once a deviation is approved, it applies to that project only. When a new project is programmed at the same location, the subject design element must be reevaluated and either (1) the subject design element is rebuilt to conform with the applicable design level, or (2) a new deviation is developed, approved, and preserved in the Design Documentation Package for the new project. Check the Design Variance Inventory System for previously granted deviations.

A change in a design level resulting from an approved Route Development Plan or corridor or project analysis, as specified in design matrix notes, is documented similar to an EU. Design elements that do not comply with the design level specified in an approved corridor or project analysis are documented as deviations.

To prepare a deviation request, or to document an EU decision, use the list in Figure 330-6 as a general guide for the sequence of the content. The list is not all-inclusive of potential content and it might include suggested topics that do not apply to a particular project. Design deviation examples are on the Internet at www.wsdot.wa.gov/eesc/design/projectdev/

330.05 Project Development

In general, the region initiates the development of a specific project by preparing the Project Summary. Some project types may be initiated by other WSDOT groups such as the Bridge Office or the Traffic Office, rather than the region. The project coordination with other disciplines (such as Real Estate Services, Utilities, and Environmental) is started in the project scoping phase and continues throughout the project's development. The region coordinates with state and federal resource agencies and local governments to provide and obtain information to assist in developing the project.

The project is developed in accordance with all applicable Directives, Instructional Letters, Supplements, and manuals as listed in D 00-00; the Master Plan for Limited Access Highways; *Washington State Highway System Plan; Route Development Plan;* Washington Federal-Aid Stewardship Agreement as implemented in the design matrices (Chapter 325); and the Project Summary.

The region develops and maintains documentation for each project. The project file includes documentation of project work including planning, scoping, public involvement, environmental action, design decisions, right of way acquisition, PS&E development, project advertisement, and construction. Refer to the *Plans Preparation Manual* for PS&E documentation.

All projects involving FHWA action require NEPA clearance. Environmental action is determined through the Environmental Classification Summary (ECS) form. The environmental approval levels are shown in Figures 330-3a and 3b.

Upon receipt of the ECS approval, for projects requiring an EA or EIS under NEPA, the region proceeds with environmental documentation, including instituting public involvement methods that are appropriate to the magnitude and type of the project. (See Chapter 210.)

The Assistant State Design Engineers work with the regions on project development and conduct process reviews on projects as described in 330.09.

330.06 Scoping Phase

Development of the project scope is the initial phase of project development for a specific project. This effort is prompted by the *Washington State Highway System Plan*. The project scoping phase consists of determining a project description, schedule, and cost estimate. The intent is to make design decisions early in the project development process that focus the scope of the project. During the project scoping phase, the Project Summary documents are produced.

Project Summary provides information on the results of the scoping phase; links the project to the *Washington State Highway System Plan* and the *Capital Improvement and Preservation Program* (CIPP); and documents the design decisions, the environmental classification, and agency coordination. The Project Summary is developed and Design Concurrence is granted before the project is funded for design and construction. The Project Summary consists of ERS, DDS, and PD documents, which are electronic forms. Specific on-line instructions for filling them out are contained in the Project Summary database.

Environmental Review Summary (ERS) lists the environmental permits and approvals that will be required, environmental classifications, and environmental considerations. This form lists requirements by environmental and permitting agencies. If there is a change in Project Summary, the information in the ERS must be reviewed and revised to match the new Project Summary. The ERS is prepared during the scoping phase and is approved by the region.

Design Decisions Summary (DDS) states the design matrix used to develop the project, the roadway geometrics, design deviations, evaluate upgrades (EUs), other roadway features, and any design decisions made during scoping of a project. The information contained in this form is compiled from various databases of departmental information, field data collection, and evaluations made in development of the Project Definition and the ERS. Design decisions may be revised throughout the project development process based on continuing evaluations.

The DDS is approved by the appropriate Assistant State Design Engineer for new construction and reconstruction projects on the Interstate System before submittal to FHWA. See 330.07. The regional design authority approves the DDS for all other types of projects. To approve the Design Decisions Summary, the region must be comfortable that there will be no significant change in the Project Definition or estimated cost. If, however, there is a change to the PD or a significant change in the cost estimate, the DDS is to be revised or supplemented and reapproved. Significant cost changes require a Project Control Form to be submitted and approved by the appropriate designee.

Project Definition (PD) identifies the various disciplines and design elements that will be encountered in project development. The PD states the needs, the purpose of the project, program categories, and the recommendations for project phasing. This information determines the level of documentation and evaluation that is needed for Design Approval. The PD is completed early in the scoping phase to provide a basis for full development of the ERS, DDS, schedule, and estimate. If circumstances necessitate a change to an approved PD, process a Project Control Form for approval by the appropriate designee, revise the original PD form, and obtain approval of the revisions.

330.07 FHWA Approval

For all NHS projects, the level of FHWA oversight varies according to the type of project, the agency doing the work, and the funding source as shown in Figures 330-2a and 330-2b. Oversight and funding do not affect the level of design documentation required for a project.

An FHWA determination of engineering and operational acceptance is required for any new or revised access point (including interchanges, temporary access breaks, and locked gate access points) on the Interstate System, regardless of funding. (See Chapter 1425.)

Documents for projects requiring FHWA review and Design Approval are submitted through the Headquarters (HQ) Design Office. Include applicable project documents as specified in Figure 330-5.

330.08 Design Approval

When the Project Summary documents are complete, and the region is confident that the proposed design adequately addresses the purpose and need for the project, a Design Concurrence may be entered into the Project File. (See Design Concurrence definition for purpose.)

When the Design Documentation Package is complete, Design Approval is granted by the approval authority designated in Figures 330-2a and 330-2b. The Design Approval becomes part of the DDP. See 330.04 and Figure 330-5 for design documents that may lead to Design Approval. Figures 330-2a through 330-4 present approval levels for project design and PS&E documents.

The following items must be approved prior to Design Approval:

- Required Environmental Documents
- Project Summary Documents
- Design Variance Inventory as required
- Cost Estimate

At the time of Design Approval, the Design Documentation Package addresses all guidance currently implemented in the *Design Manual*. If a project is delayed but is advertised within three years of the Design Approval, discuss *Design Manual* revisions with your Project Development Engineer, who will discuss the revisions with the appropriate Assistant State Design Engineer (ASDE) to determine if there is a need to redesign any portion of the project. If the ASDE determines that a redesign is not necessary, the ASDE will confirm with an e-mail. Place a copy of the e-mail confirmation in the Design Documentation Package to document that the current design criteria was evaluated and the ASDE agreed that a redesign is unnecessary.

Address new design policy for projects to be advertised more than three years after Design Approval, redesign as appropriate, and update the Design Documentation Package and the Design Approval to reflect the revisions. Consult the Detailed Chronology of Design Policy Changes Affecting Shelved Projects

at www.wsdot.wa.gov/eesc/design/policy/designpolicy.htm for an overview of design policy changes.

330.09 Process Review

The process review is done to provide reasonable assurance that projects are prepared in compliance with established policies and procedures and that adequate records exist to show compliance with state and federal requirements. Process reviews are conducted by WSDOT, FHWA, or a combination of both.

The design and PS&E process review is performed in each region at least once each year by the HQ Project Development Branch. The documents used in the review process are: the Design Documentation Check List, PS&E Review Check List, and PS&E Review Summary. These are generic forms used for all project reviews. Copies of these working documents are available for reference when assembling project documentation. HQ Design Office, Project Development Branch maintains current copies on the Internet at www.wsdot.wa.gov/eesc/design/projectdev/

Each project selected for review is examined completely and systematically beginning with the scoping phase (including planning documents) and continuing through contract plans and (when available) construction records and change orders. Projects are normally selected after contract award. For projects having major traffic design elements, the Maintenance and Operations Programs' Traffic Operations personnel are involved in the review. The WSDOT process reviews may be held in conjunction with FHWA process reviews.

The HQ Project Development Branch schedules the process review and coordinates it with the region and FHWA.

A process review follows this general agenda:

1. Review team meets with regional personnel to discuss the object of the review.
2. Review team reviews the design and PS&E documents, and the construction documents and change orders if available, using the check lists.
3. Review team meets with regional personnel to ask questions and clarify issues of concern.
4. Review team meets with regional personnel to discuss findings.
5. Review team submits a draft report to the region for comments and input.
6. If the review of a project shows a serious discrepancy, the regional design authority is asked to report the steps that will be taken to correct the deficiency.
7. The process review summary forms are completed.
8. The summary forms and check lists are evaluated by the State Design Engineer.
9. The findings and recommendations of the State Design Engineer are forwarded to the regional design authority, for action and/or information, within 30 days of the review.

Project Design	FHWA Oversight Level	Deviation and Corridor/Project Approval[a][b]	EU Approval[b]	Design Approval
Interstate				
New/Reconstruction[c] • Federal funds • No federal funds	 (d) (e)	FHWA	Region	FHWA
Intelligent Transportation Systems (ITS) over $1 million	(f)	HQ Design	Region	HQ Design
All Other[g] • Federal funds • State funds • Local agency funds	 (f) (f) (e)	HQ Design	Region	Region
National Highway System (NHS)				
Managed access highway outside incorporated cities and towns, or inside unincorporated cities and towns, or on a limited access highway	(f)	HQ Design	Region	Region
Managed access highway within incorporated cities and towns[h] • Inside curb or EPS[i] • Outside curb or EPS	 (f) (f)	 HQ Design HQ H&LP	 Region N/A	 Region City/Town

FHWA = Federal Highway Administration
HQ = WSDOT Headquarters
H&LP = WSDOT Highways and Local Programs Office
EPS = Edge of paved shoulder where curbs do not exist

(a) These approval levels also apply to deviation processing for local agency work on a state highway.
(b) See 330.04(4)
(c) See Chapter 325 for definition.
(d) Requires FHWA review and approval (full oversight) of design and PS&E submitted by HQ Design
(e) To determine the appropriate oversight level, FHWA reviews the Project Summary (or other programming document) submitted by HQ Design, or by WSDOT Highways and Local Programs through HQ Design
(f) FHWA oversight is accomplished by process review. (See 330.09)
(g) Reduction of through lane or shoulder widths (regardless of funding) requires FHWA review and approval of the proposal
(h) Applies to the area within the incorporated limits of cities and towns
(i) Includes raised medians

Design Approval Level
Figure 330-2a

Project Design	FHWA Oversight Level	Deviation and Corridor/Project Approval[a][b]	EU Approval[b]	Design Approval
Non-National Highway System (Non-NHS)				
Improvement project on managed access highway outside incorporated cities and towns, or within unincorporated cities and towns, or on a limited access highway, (Matrix lines 5-8 through 5-26)	N/A	HQ Design	Region	Region
Improvement project on managed access highway within incorporated cities and towns[h] • Inside curb or EPS[i] • Outside curb or EPS (Matrix lines 5-8 through 5-26)	N/A N/A	HQ Design HQ H&LP	Region N/A	Region City/Town
Preservation project on managed access highway outside incorporated cities and towns, or within unincorporated cities and towns, or on a limited access highway[j] (Matrix lines 5-1 through 5-7)	N/A	Region[k]	Region	Region
Preservation project on managed access highway within incorporated cities and towns[h] [j] • Inside curb or EPS[i] • Outside curb or EPS (Matrix lines 5-1 through 5-7)	N/A N/A	Region HQ H&LP	Region N/A	Region City/Town

FHWA = Federal Highway Administration
HQ = WSDOT Headquarters
H&LP = WSDOT Highways and Local Programs Office
EPS = Edge of paved shoulder where curbs do not exist

(a) These approval levels also apply to deviation processing for local agency work on a state highway.
(b) See 330.04(4)
(h) Applies to the area within the incorporated limits of cities and towns
(i) Includes raised medians
(j) For Bridge Replacement projects in the preservation program, follow the approval level specified for improvement projects.
(k) See Chapters 1430 & 1435 for guidance on access deviations

Design Approval Level
Figure 330-2b

Item	Approval Authority		
	Region	HQ	FHWA
Program Development			
Work Order Authorization		**X**	**X** [1]
Public Hearings			
Corridor Hearing Summary		**X** [2]	
Design Summary		**X** [3]	
Access Hearing Plan		**X** [4]	
Access Findings and Order		**X** [5]	
Environmental By Classification			
Summary (ECS) NEPA			**X**
Class I NEPA (EIS)		[7]	**X**
Class I SEPA (EIS)		**X**	
Class II NEPA *Programmatical Categorical Exclusion (CE)	**X**		
Class II NEPA — Documented Categorical Exclusion (CE)	[6]		**X**
Class II SEPA — Categorical Exemption (CE)	**X**		
Class III NEPA — Environmental Assessment (EA)		[7]	**X**
SEPA Check List	X		
Design			
Design Deviations	[8]	[8]	[8]
Experimental Features		**X**	**X** [9]
Environmental Review Summary	**X**		
Final Design Decisions Summary	**X**	**X** [3]	
Final Project Definition		**X** [10]	
Access Point Decision Report		[7]	**X**
Non-Interstate Interchange Access Point Report		**X**	
Interchange Plans	**X** [11]	**X** [9][11]	
Intersection Plans	**X** [11]	**X** [9][11]	
Right of Way Plans	[12]	**X**	
Monumentation Map	**X**		
Materials Source Report		**X** [13]	
Pavement Determination Report		**X** [13]	
Project Design Approval	[8]	[8]	[8]

Approvals
Figure 330-3a

Item	Approval Authority		
	Region	HQ	FHWA
Design			
Resurfacing Report		**X** [13]	
Signal Permits	**X** [14]		
Geotechnical Report		**X** [13]	
Tied Bids	**X** [15]		**X** [9][15]
Bridge Design Plans (Bridge Layout)	**X**	**X**	
Hydraulic Report	**X** [16]	**X** [16]	
Preliminary Signalization Plans		**X** [6]	
Rest Area Plans		**X**	
Roadside Restoration Plans	**X** [18]	**X** [19]	
Structures Requiring TS&L's		**X**	**X**
Wetland Mitigation Plans	**X**	**X**	
Wetland Mitigation Planting Plans	**X** [18]	**X** [19]	
Grading Plans	**X** [18]	**X** [19]	
Continuous Illumination – Main Line		**X** [20]	
Project Control Form	**X** [21]	**X** [21]	

X Normal procedure
* If on the preapproved list

Notes:

[1] Federal aid projects only
[2] Environmental and Engineering Programs Director approval
[3] State Design Engineer approval
[4] Right of Way Plans Engineer approval
[5] Refer to Chapter 210 for approval requirements
[6] Final review & concurrence required at the region prior to submittal to approving authority
[7] Final review & concurrence required at HQ prior to submittal to approving authority
[8] Refer to Figures 330-2a & 330-2b for design approval level
[9] Applies to new/reconstruction projects on Interstate routes
[10] HQ Project Control & Reporting approval
[11] Include channelization details
[12] Certified by the responsible professional licensee
[13] Submit to HQ Materials Branch for review and approval
[14] Approved by region's Administrator
[15] See 23 CFR 635.111
[16] See M 23-03, *Hydraulics Manual* for additional guidance
[17] Region to submit Hydraulic Report. Refer to *Hydraulics Manual*
[18] Applies only to regions with a Landscape Architect
[19] Applies only to regions without a Landscape Architect
[20] Approved by State Traffic Engineer
[21] Consult HQ Project Control & Reporting for clarification on approval authority

Approvals
Figure 330-3b

Item	New/ Reconstruction (Interstate only)	NHS and Non-NHS
DBE/training goals* **	(a)	(a)
Right of way certification for federal aid projects	FHWA (b)	FHWA (b)
Right of way certification for state funded projects	Region(b)	Region(b)
Railroad agreements	(c)	(c)
Work performed for public or private entities*	[1][2]	Region[1][2]
State force work*	FHWA[3](d)	[3](c)(d)
Use of state furnished stockpiled materials*	FHWA[4]	Region[4]
Stockpiling materials for future projects*	FHWA[4]	Region[4]
Work order authorization	[5](d)	[5](d)
Ultimate reclamation plan approval through DNR	Region	Region
Proprietary item use*	FHWA[4]	[4](c)
Mandatory material sources and/or waste sites*	FHWA[4]	Region[4]
Nonstandard bid item use*	Region	Region
Incentive provisions	FHWA	(e)
Nonstandard time for completion liquidated damages*	FHWA(e)	(e)
Interim liquidated damages*	(f)	(f)

Notes:
[1] This work requires a written agreement.
[2] Region approval subject to $250,000 limitation.
[3] Use of state forces is subject to $50,000 limitation as stipulated in RCWs 47.28.030 and 47.28.035.
[4] Applies only to federal aid projects. However, document for all projects.
[5] Prior FHWA funding approval required for federal aid projects.

Regional or Headquarters approval authority:
(a) Office of Equal Opportunity
(b) Real Estate Services
(c) Design Office
(d) Project Control & Reporting Office
(e) Construction Office
(f) Transportation Data Office

References:
***Advertisement and Award Manual*
**Plans Preparation Manual*

PS&E Process Approvals
Figure 330-4

Document (1)	Required for FHWA Oversight
Project Definition	X
Design Decisions Summary	X
Environmental Review Summary	X
Design Variance Inventory (and supporting information for DEs, EUs not upgraded, and deviations) (2)	X
Cost Estimate	X
SEPA & NEPA documentation	X
Design Clear Zone Inventory (see Chapter 700)	X
Interchange plans, profiles, roadway sections	X
Access Point Decision Report (if requesting new or revised access points)	X
Corridor or Project analysis (see Chapter 325)	X
Traffic projections and analysis	
Accident analysis	
Right of Way plans	
Work zone traffic control strategy	
Record of Survey or Monumentation Map	
Documentation of decisions to differ from WSDOT design guidance	
Documentation of decisions for project components for which there is no WSDOT design guidance	

Notes:

(1) See Design Documentation Check List at www.wsdot.wa.gov/eesc/design/projectdev/ for a complete list of project documentation requirements.

(2) Required for NHS highways, recommended for all highways.

Common Components of Design Documentation Package

Figure 330-5

1. Overview
   (a) The safety or improvement need that the project is to meet
   (b) Description of the project as a whole
   (c) Highway classification and applicable design matrix
   (d) Funding sources
   (e) Evidence of deviations approved for previous projects (same location)
2. Design Alternatives in Question
   (a) Existing Conditions and Design Data
      - Location in question
      - Rural, urban, or developing
      - Route development plan
      - Environmental issues
      - Right of way issues
      - Number of lanes and existing geometrics
      - Present and 20 year projected ADT
      - Design speed, posted speed and operating speed
      - Percentage of trucks
      - Terrain Designation
      - Managed Access or Limited Access
   (b) Accident Summary and Analysis
   (c) Design Using the Design Manual criteria
      - Description
      - Cost estimate
      - B/C ratio
      - Advantages and disadvantages
      - Reasons for considering other designs
   (d) Other Alternatives (may include “No-build” alternative)
      - Description
      - Cost estimate
      - B/C ratio
      - Advantages and disadvantages
      - Reasons for rejection
   (e) Selected design requiring justification or documentation to file
      - Description
      - Cost estimate
      - B/C ratio
      - Advantages and disadvantages
      - Justification - see 330.04(4)
3. Concurrences, Approvals, and Professional Seals

Deviation and Evaluate Upgrade Request/Documentation Content List
Figure 330-6

430.01 General
430.02 Design Speed
430.03 Roadway Widths
430.04 Ramp Lane Widths
430.05 Stopping Sight Distance
430.06 Profile Grades
430.07 Cross Slope
430.08 Fill Slopes and Ditch Inslopes
430.09 Intersections
430.10 Bridges
430.11 Documentation

430.01 General

Modified design level (M) preserves and improves existing roadway geometrics, safety, and operational elements. This chapter provides the design guidance that is unique to the modified design level.

Design elements that do not have modified design level guidance include:

- Access control, see Chapter 1420
- Basic safety, see Chapter 410
- Clear zone, see Chapter 700
- Traffic barriers, see Chapter 710
- Gore area lighting, see Chapter 840
- Interchange areas, see Chapter 940

Design elements that have both modified and full design level components include:

- Horizontal alignment, see Chapter 620
- Superelevation and shoulder cross slope, see Chapter 640
- Vertical alignment, see Chapter 630

430.02 Design Speed

When applying modified design level to a project, select a design speed for use in the design process that reflects the character of the terrain and the type of highway. Select a speed that is not less than the posted speed, the proposed posted speed, or the operating speed, whichever is higher. Document which speed was used, include any supporting studies and data.

430.03 Roadway Widths

The design of a project must not decrease the existing roadway width.

Lane and shoulder widths are shown in Figures 430-3 and 4. Consider joint use with other modes of transportation in shoulder design.

Review route continuity and roadway widths. Select widths on the tangents to be consistent throughout a given section of the route. Make any changes where the route characteristics change.

(1) Turning Roadway Widths

It may be necessary to widen the roadway on curves to accommodate large vehicles. The total two-lane roadway width of a curve may not be less than that shown in Figure 430-5 or, if the internal angle (delta) is less than 90 degrees, Figure 430-6. The proposed roadway width for a curve may not be less than that of the adjacent tangent sections.

The total roadway width from Figure 430-5 or Figure 430-6 may include the shoulder. When the shoulder is included, full-depth pavement is required.

Widening of the total roadway width of a curve by less than 2 ft is not required for existing two-lane roadways that are to remain in place.

(2) Median Width

See Figure 430-3.

430.04 Ramp Lane Widths

Ramp lane widths are shown in Figure 430-1 and in Figure 430-10. For ramps with radii less than 300 ft apply full design level. See Chapter 640.

Curve Radius (ft)	Lane Width (ft)
Tangent - 4,000	13
3,000 - 2,000	14
1,000 - 300	15

Turning Ramp Lane Widths
Modified Design Level
Figure 430-1

430.05 Stopping Sight Distance

(1) Existing Stopping Sight Distance for Vertical Curves

For crest vertical curves use the existing algebraic difference in grades and the length of curve to compare the existing condition to Figure 430-7. If corrective action is required by Figure 430-7, apply full design level and see Chapter 650.

When modified design level is being applied, sag vertical curves are not normally addressed.

(2) Stopping Sight Distance for Horizontal Curves

For modified design level, use the existing lateral clearance to the sight obstruction and the curve radius to compare the existing condition to Figure 430-8. If corrective action is required by Figure 430-8, apply full design level and see Chapter 650.

For Figure 430-8, an obstruction is any object with a height of 2 ft or more above the roadway surface on the inside of a curve. Examples of possible obstructions are median barrier, guardrail, bridges, walls, cut slopes, wooded areas, and buildings.

430.06 Profile Grades

When applying modified design level, profile grades generally are not flattened. However, corrective action may be justified for combinations of steep grades and restricted horizontal or vertical curvature. Identify major modifications to horizontal and vertical alignment in the Project Decisions Summary. Total removal of pavement and reconstruction of the subgrade are examples of major modifications.

430.07 Cross Slope

On all tangent sections, the normal cross slopes of the traveled way are 2 percent. Cross slopes up to 2 percent have a barely perceptible effect on vehicle steering, but cross slopes steeper than 2 percent can be noticeable.

The algebraic difference in cross slopes is an operational factor during a passing maneuver on a two-lane road. Its influence increases when increased traffic volumes decrease the number and size of available passing opportunities.

If a longitudinal contiguous section of pavement is to be removed or is on a reconstructed alignment, or if a top course is to be placed over existing pavement, design the restored pavement to a cross slope of 2 percent.

A somewhat steeper cross slope may be necessary to facilitate pavement drainage in areas of intense rainfall, even though this might be less desirable from the operational point of view. In such areas, the design cross slopes may be increased to 2.5 percent with an algebraic difference of 5 percent.

For existing pavements, cross slopes within a range of 1 to 3 percent may remain if there are no operational or drainage problems and— on a two-way, two-lane road — the following conditions are met:

- The algebraic difference is not greater than 4 percent where the ADT is greater than 2000.
- The algebraic difference is not greater than 5 percent where the ADT is 2000 or less.
- The algebraic difference is not greater than 6 percent and the road is striped or signed for no passing.

If the existing pavement does not meet the conditions above, correct the cross slope(s) to be within the range of 1.5 to 2.5 percent. For a two-way, two-lane road, provide an algebraic difference to meet the appropriate conditions stated above except when facilitating drainage in areas of intense rainfall. When applying modified design level to a road with bituminous surface treatment (BST), cross slope correction is not required on the basis of algebraic differences alone.

To maintain or restore curb height, consider lowering the existing pavement level and correcting cross slope by grinding before an asphalt overlay. On urban highways, the cross slope of the outside shoulder may be steepened to minimize curb height and other related impacts. The shoulder may be up to 6 percent with a rollover between the traveled way and the shoulder of no more than 8 percent.

710.01 General
710.02 References
710.03 Definitions
710.04 Project Requirements
710.05 Barrier Design
710.06 Beam Guardrail
710.07 Cable Barrier
710.08 Concrete Barrier
710.09 Special Use Barriers
710.10 Bridge Rails
710.11 Other Barriers
710.12 Documentation

710.01 General

Traffic barriers are used to reduce the severity of accidents that occur when an errant vehicle leaves the traveled way. However, traffic barriers are obstacles that the vehicle will encounter and must only be used when justified by accident history or the criteria in Chapter 700.

710.02 References

Roadside Design Guide, AASHTO

Bridge Design Manual, M 23-50, WSDOT

Standard Plans for Road, Bridge, and Municipal Construction (Standard Plans), M 21-01, WSDOT

Traffic Manual, M 51-02, WSDOT

710.03 Definitions

barrier terminal A crashworthy end treatment for longitudinal barriers that is designed to reduce the potential for spearing, vaulting, rolling, or excessive deceleration of impacting vehicles from either direction of travel. Beam guardrail terminals include anchorage.

controlled releasing terminal (CRT) post A standard length guardrail post that has two holes drilled through it so that it will break away when struck.

crashworthy A feature that has been proven acceptable for use under specified conditions either through crash testing or in-service performance.

guardrail transition A section of barrier used to produce a gradual stiffening of a flexible or semirigid barrier as it connects to a more rigid barrier or fixed object.

impact attenuator system A device that acts primarily to bring an errant vehicle to a stop at a deceleration rate tolerable to the vehicle occupants or to redirect the vehicle away from a hazard.

length of need The length of a traffic barrier needed to shield a hazard.

longitudinal barrier Traffic barrier oriented parallel or nearly parallel to the roadway. The purpose is to contain or redirect errant vehicles. Beam guardrail, cable barrier, bridge rail, and concrete barrier are longitudinal barriers. Longitudinal barriers are categorized as rigid, unrestrained rigid, semirigid, and flexible. They can be installed as roadside or median barriers.

shy distance The distance from the edge of the traveled way beyond which a roadside object will not be perceived as an immediate hazard by the typical driver to the extent that the driver will change the vehicle's placement or speed.

traffic barrier A longitudinal barrier, including bridge rail, or an impact attenuator used to redirect vehicles from hazards located within an established Design Clear Zone, to prevent median crossovers, to prevent errant vehicles from going over the side of a bridge structure, or (occasionally) to protect workers, pedestrians, or bicyclists from vehicular traffic.

710.04 Project Requirements

This section identifies the barrier elements that must be addressed according to the Design Matrices in Chapter 325. Remove any barrier that is not needed (based on the criteria in Chapter 700) or poses a more severe hazard than the hazard it is shielding.

(1) Barrier Terminals and Transitions

(a) **Basic Design Level (B).** When the basic design level (B) is indicated in the Terminal and Transition Section column of a Design Matrix, install, replace, or upgrade transitions as discussed in 710.06(3), Transitions and Connections.

Impact attenuators must meet the requirements found in Chapter 720, Impact Attenuators.

When installing new terminals, consider extending the guardrail to meet the length of need criteria in 710.05(4) as a spot safety enhancement.

Concrete barrier terminals must meet the requirements found in 710.08(2). When the end of a concrete barrier has been terminated with a small mound of earth (a design formerly known as a Concrete Barrier Berm), remove and replace with a crashworthy terminal, except as noted in 710.09.

Redirectional land forms, also referred to as earth berms, were installed to mitigate hazards located in depressed medians and at roadsides. They were constructed of materials that provided support for a traversing vehicle. With slopes in the range of 2H:1V to 3H:1V, they were intended to redirect errant vehicles. The use of redirectional land forms has been discontinued as a means for mitigating fixed objects. Where redirectional land forms currently exist as mitigation for a fixed object, ensure that the hazard they were intended to mitigate is removed, relocated, made crashworthy, or shielded with barrier. Landforms may be used to provide a smooth surface at the base of a rock cut slope.

Replace guardrail terminals that do not have a crashworthy design with crashworthy guardrail terminals. See 710.06(2), Terminals and Anchors. Common features of noncrashworthy designs:

- No cable anchor.
- A cable anchored into concrete in front of the first post.
- Second post not breakaway (CRT).
- Design A end section. (Design C end sections may be left in place.)
- Beam guardrail on both sides of the posts (two sided).
- Buried guardrail terminals that slope down such that the guardrail height is reduced to less than 24 in.

One terminal that was used extensively on Washington's highways was the Breakaway Cable Terminal (BCT). This system used a parabolic flare similar to the SRT and Type 1 anchor. Type 1 anchor posts are wood set in a steel tube or a concrete foundation.

BCTs that have at least a 3 ft offset may remain in place when the basic design level applies unless the guardrail run or anchor is being reconstructed or reset. (Raising the rail element is not considered reconstruction or resetting.) Replace all BCTs that have less than a 3 ft offset.

Existing transitions that do not have a curb but are otherwise consistent with the designs shown in the Standard Plans may remain in place.

For preservation projects, terminal and transition work may be programmed under a separate project as described in Chapter 410.

(b) **Full Design Level (F).** When the full design level (F) is indicated, the requirements for the basic design level apply except that all BCTs and concrete barrier berms must be replaced.

(2) Standard Run of Barrier

In Chapter 325, the matrices have Design Elements "Standard Run" under Barriers. A "Standard Run" of barrier consists of longitudinal barrier that can be found in the Standard Plans manual.

(a) **Basic Design Level (B).** When the basic design level (B) is indicated in the Standard Run column of a Design Matrix and the height of W-beam guardrail is or would be reduced to less than 24 in from the ground to the top of the rail element, adjust the height to that shown in the Standard Plans. If Type 1 Alternate W-beam guardrail is present, raise the rail element after each overlay.

Overlays in front of safety shaped concrete barriers can extend to the top of the lower, near-vertical face of the barrier before adjustment is required. Allow no more than 13 in from the pavement to beginning of the top near-vertical face on either the F or NJ shape barriers. Allow no less than 32 inches from the pavement to the top of the single slope barrier. Allow no less than 27 in from the ground to the top cable of the Type 1 cable barrier and no less than 30 in for the Type 2 and Type 3 cable barrier.

(b) **Full Design Level (F).** When the full design level (F) is indicated, in addition to the requirements for the basic design level, the barrier must meet the requirements found in the following:

700.06	Median Barrier Guidelines
710.05(1)	Shy Distance
710.05(2)	Barrier Deflections
710.05(3)	Flare Rate
710.05(4)	Length of Need
710.05(5)	Median Barrier Selection
710.06	Beam Guardrail
710.07	Cable Barrier
710.08	Concrete Barrier

Examples of barriers that are not acceptable as a "standard run" are:

- W-beam guardrail with 12 ft-6 in post spacing and no blockouts.
- W-beam guardrail on concrete posts.
- Cable barrier on wood or concrete posts.
- Half-moon or C shape rail elements.

(3) Bridge Rail

When the Bridge Rail column of a matrix applies to the project, the bridge rails must meet the following requirements:

Use an approved, crash tested concrete bridge rail on new bridges or bridges to be widened. The *Bridge Design Manual* provides examples of typical bridge rails. Consult the Bridge and Structures Office regarding bridge rail selection and design and for design of the connection to an existing bridge.

An existing bridge rail on a highway with a posted speed of 30 mph or less may remain in place if it is not located on a bridge over a National Highway System (NHS) highway. The only exception is when Type 7 bridge rail is present as it may remain place, regardless of the type of metal rail installed. All other bridge rails must be evaluated for strength and geometrics. See 710.11 for guidance on retrofit techniques. The funding source for retrofit of existing bridge rail is dependent on the length of the structure. Bridge rail retrofit, for bridges less than 250 ft in length (or a total bridge rail length of 500 ft), is funded by the project (Preservation or Improvement). For longer bridges, the retrofit can be funded by the I2 subprogram. Contact programming personnel to determine if funding is available.

The Type 7 bridge rail is common. Type 7 bridge rails have a curb, a vertical-face parapet, and an aluminum top rail. The curb width and the type of aluminum top rail dictate the adequacy of the Type 7 bridge rail as shown on Figure 710-1. Consult the Bridge and Structures Office for assistance in evaluating other bridge rails.

710.05 Barrier Design

When selecting a barrier, consider the flexibility, cost, and maintainability of the system. It is generally desirable to use the most flexible system possible to minimize damage to the impacting vehicle and injury to the vehicle's occupant(s). However, since nonrigid systems sustain more damage during an impact, the exposure of maintenance crews to traffic might be increased.

Concrete barrier maintenance costs are lower than for other barrier types. Deterioration due to weather and vehicle impacts is limited. Unanchored precast concrete barrier can usually be realigned or repaired when moved from its alignment. However, heavy equipment may be required to reposition or replace barrier segments. Therefore, in medians, consider the shoulder width and the traffic volume when determining the acceptability of unanchored precast concrete barrier versus a rigid concrete barrier.

Drainage, alignment, and drifting snow or sand are considerations that can influence the selection of barrier type. Beam guardrail and concrete barrier can contribute to snow drifts. Consider long-term maintenance costs associated with snow removal at locations prone to snow drifting. Slope flattening is highly recommended, even at additional cost, to eliminate the need for the barrier. Cable barrier is not an obstruction to drifting snow and can be used if slope flattening is not practical.

When designing a barrier for use on a Scenic Byway or Heritage Tour Route (formerly Scenic and Recreational Highway), consider barriers that are consistent with the recommendations in the associated Corridor Management Plan (if one is available). Contact the region's Landscape Architect or the Headquarters' Heritage Corridors Program manager to determine if the project is on such a designated route. Low cost options, such as using weathering steel beam guardrail (710.06) or cable barrier (710.07) might be feasible on many projects. Higher cost options, such as steel backed timber rail and stone guardwalls (710.09) might require a partnering effort to fund the additional costs. Grants might be available for this purpose if the need is identified early in the project definition phase. (See Chapter 120.)

(1) Shy Distance

Provide 2 ft of additional widening for shy distance when a barrier is to be installed in areas where the roadway is to be widened and the shoulder width will be less than 8 ft. This shy distance is not required when the section of roadway is not being widened or the shoulders are at least 8 ft wide.

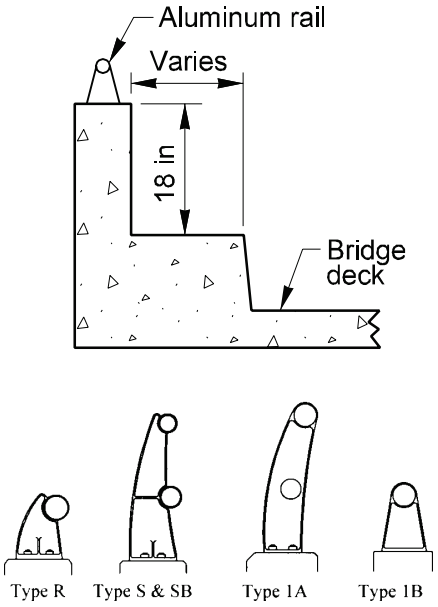

	Curb Width	
Aluminum Rail Type	9 in or less	Greater than 9 in*
Type R, S, or SB	Bridge rail adequate	Bridge rail adequate
Type 1B or 1A	Bridge rail adequate	Upgrade bridge rail
Other	Consult the Bridge and Structures Office	

* When the curb width is greater than 9 in, the aluminum rail must be able to withstand a 5 kip load.

Type 7 Bridge Rail Upgrade Criteria
Figure 710-1

(2) Barrier Deflections

All barriers except rigid barriers (concrete bridge rails for example) will deflect when hit by an errant vehicle. The amount of deflection is primarily dependent on the stiffness of the system. Vehicle speed, angle of impact, and weight also affect the amount of barrier deflection. For flexible and semirigid roadside barriers, the deflection distance is designed to prevent the impacting vehicle from striking the object being shielded. For unrestrained rigid systems (unanchored precast concrete barrier), the deflection distance is designed to prevent the barrier from being knocked over the side of a drop-off or steep fill slope (2H:1V or steeper).

In median installations, the deflected system must not become a hazard to oncoming traffic. In addition, narrow medians provide little space for maintenance crews to repair or reposition the barrier. Avoid installing deflecting barriers in medians that provide less than 8 ft from the edge of the traveled way to the face of the barrier.

Use a rigid system where deflection cannot be tolerated such as in narrow medians or at the edge of a bridge deck (vertical drop-off). Runs of rigid concrete barrier can be cast-in-place, extruded with appropriate footings, or, for precast concrete barrier, bolted or bracketed to the underlying material.

See Figure 710-2 for barrier deflection design values to be used when selecting a longitudinal barrier. The deflection distances for cable and beam guardrail are the minimum measurements from the face of the barrier to the hazard. The deflection distance for unanchored concrete barrier is the minimum measurement from the back edge of the barrier to the drop-off or slope break.

Barrier Type	System Type	Deflection
Cable barrier or beam guardrail on G-2 posts	Flexible	up to 12 ft (face of barrier to object)
Beam guardrail Types 1, 1a, 2, and 10	Semirigid	3 ft (face of barrier to object)
Two-sided W-beam guardrail Types 3 and 4	Semirigid	2 ft (face of barrier to object)
Permanent concrete barrier, unanchored	Unrestrained Rigid	3 ft (1) (back of barrier to object)
Temporary concrete barrier, unanchored	Unrestrained Rigid	2 ft (2) (back of barrier to object)
Concrete barrier, anchored	Rigid	no deflection

(1) When placed in front of a 2H:1V or flatter fill slope, the deflection distance can be reduced to 2 ft.

(2) When used as temporary bridge rail, anchor all barrier that is within 3 ft of a drop-off.

Longitudinal Barrier Deflection
Figure 710-2

(3) Flare Rate

Flare the ends of longitudinal barriers where possible. There are four functions of the flare:

- To locate the barrier and its terminal as far from the traveled way as is feasible.
- To reduce the length of need.
- To redirect an errant vehicle without serious injuries to its occupants.
- To minimize a driver's reaction to the introduction of an object near the traveled way.

Keeping flare rates as flat as practical preserves the barrier's redirectional performance and minimizes the angle of impact. But, it has been shown that an object (or barrier) close to the traveled way might cause a driver to shift laterally, slow down, or both. The flare reduces this reaction by gradually introducing the barrier so that the driver does not perceive the barrier as a hazard. The flare rates in Figure 710-3 satisfy all four functions listed above. More gradual flares may be used.

Posted Speed mph	Rigid System	Unrestrained Rigid System	Semirigid System
70	20:1	18:1	15:1
60	18:1	16:1	14:1
55	16:1	14:1	12:1
50	14:1	12:1	11:1
45	12:1	11:1	10:1
40 or below	11:1	10:1	9:1

Longitudinal Barrier Flare Rates
Figure 710-3

(4) Length of Need

The length of traffic barrier required to shield a hazard (length of need) is dependent on the location and geometrics of the hazard, direction(s) of traffic, posted speed, traffic volume, and type and location of traffic barrier. When designing a barrier for a fill slope as recommended in Chapter 700, the length of need begins at the point where barrier is recommended. For fixed objects and water hazards, Figures 710-11a and b show design parameters for determining the necessary length of a barrier for both adjacent and opposing traffic on relatively straight sections of highway. When the barrier is to be installed on the outside of a horizontal curve, the length of need can be determined graphically as shown on Figure 710-11c. For installations on the inside of a curve, determine the length of need as though it was straight. Consider the flare rate, barrier deflection, and barrier end treatment to be used when determining the length of need.

Before the actual length of need is determined, establish the lateral distance between the proposed barrier installation and the item shielded. This distance must be greater than or equal to the anticipated deflection of the longitudinal barrier. (See Figure 710-2 for barrier deflections.) Place the barrier as far from the edge of the traveled way as possible while maintaining the deflection distance.

If the end of the length of need is near an adequate cut slope, extend the barrier and embed it in the slope. (See 710.06(2)(a).) Avoid gaps of 300 ft or less. Short gaps are acceptable when the barriers are terminated in a cut slope. If the end of the length of need is near the end of an existing barrier, it is recommended that the barriers be connected to form a continuous barrier. Consider maintenance access when determining whether to connect barriers.

(5) Median Barrier Selection and Placement Considerations

As with all barriers, the most desirable installation uses a system that is the most flexible system appropriate for the location and is placed as far from the traveled way as practical. With median barriers, the deflection characteristics and placement of the barrier for a traveled way in one direction can have an impact on the traveled way in the opposing direction. In addition, the median slopes and environmental issues might influence the type of barrier that is appropriate.

In narrow medians, the deflected system must not become a hazard to oncoming traffic. In addition, narrow medians provide little space for maintenance crews to repair or reposition the barrier. Avoid installing deflecting barriers in medians that provide less than 8 ft from the

edge of the traveled way to the face of the barrier. In wider medians, the selection of barrier might depend on the slopes in the median.

At locations where the median slopes are relatively flat (10H:1V or flatter), unrestrained precast concrete barrier, beam guardrail, and cable barrier can be used depending on the available deflection distance. At these locations, position the barrier as close to the center as possible so that the recovery distance can be maximized for both directions. It might be necessary to offset the barrier from the flow line to avoid impacts to the drainage flow. Cable barrier is preferred with medians that are 30 ft or wider. For medians wider than 30 ft, provide justification for placing a barrier closer than 15 ft from the edge of a traveled way.

In wide medians where the slopes are steeper than 10H:1V but not steeper than 6H:1V, cable barrier placed near the center of the median is preferred. Placement of beam guardrail requires that the barrier be placed at least 12 ft from the slope break as is shown on Figure 710-4. Do not use concrete barrier at locations where the foreslope into the face of the barrier is steeper than 10H:1V.

At locations where the roadways are on independent alignments and there is a difference in elevation between the roadways, the slope from the upper roadway might be steeper than 6H:1V. In these locations, position the median barrier along the upper roadway and provide deflection and offset distance as discussed previously. Barrier is generally not necessary along the lower roadway except where there are fixed objects in the median.

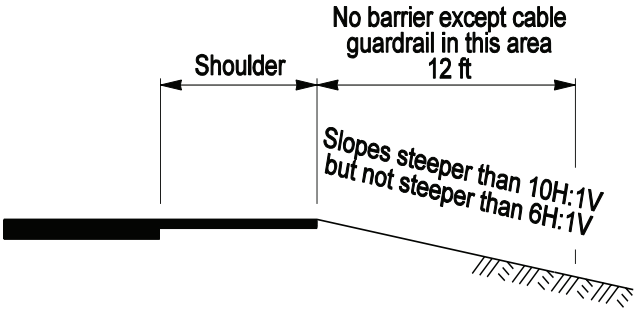

Guardrail Locations on Slopes
Figure 710-4

710.06 Beam Guardrail

(1) Beam Guardrails

Beam guardrail systems are shown in the Standard Plans.

Strong post W-beam guardrail (Types 1 through 4) and thrie beam guardrail (Types 10 and 11) are semirigid barriers used predominately on roadsides. They also have limited application as median barrier. Installed incorrectly, strong post beam guardrail can cause vehicle snagging or spearing. This can be avoided by lapping the rail splices in the direction of traffic as shown in the Standard Plans, by using crashworthy end treatments, and by blocking the rail away from the strong posts. Do not use more than two 8 in blockouts.

On asphalt concrete pavements (where overlays are anticipated), the Type 1 Alternate guardrail can be used to allow raising of the guardrail without having to adjust the posts.

Weak post W-beam guardrail (Type 20) and thrie beam guardrail (Type 21) are flexible barrier systems that can be used where there is adequate deflection distance. These systems use weak steel posts. The primary purpose of these posts is to position the guardrail vertically and they are designed to bend over when struck. These more flexible systems will result in less damage to the impacting vehicle. Since the weak posts will not result in snagging, blockouts are not necessary.

Keep the slope of the area between the edge of shoulder and the face of the guardrail as flat as possible. The preferred slope is 10H:1V or flatter. Do not place beam guardrail on a fill slope steeper than 6H:1V. On fill slopes between 6H:1V and 10H:1V, beam guardrail must not be placed within 12 ft of the break point. (See Figure 710-4.)

On the high side of superelevated sections, place beam guardrail at the edge of shoulder.

Generally, 2 ft of shoulder widening behind the barrier is provided from the back of the post to the beginning of a fill slope. If the slope is 2H:1V or flatter, this distance can be measured from the face of the guardrail rather than the back of the post. (See Figure 710-12, Case 1.)

On projects where no roadway widening is proposed and the minimum 2 ft shoulder widening behind the barrier is not practical, long post installations are available as shown on Figure 710-12, Cases 3, 4, 5, and 6. When guardrail is to be installed in areas where the roadway is to be widened, the use of Cases 4, 5, or 6 requires a design deviation.

Rail washers on beam guardrail are not normally used. If rail washers are present, they are not required to be removed. However, if the rail element is removed for any reason, do not reinstall the rail washers. In areas where heavy snow accumulations are expected to cause the bolts to pull out, specify snow load post and rail washers in the contract documents. (Snow load post washers are used to prevent the bolts from pulling through the posts and snow load rail washers are used to prevent the bolt head from pulling through the rail.) Rail washers are never to be used within the limits of a guardrail terminal except at the end post where they are required for anchorage of the rail.

It is preferred that no curbs be installed in conjunction with beam guardrail. However, if a curb is necessary, the 3 in high curb is preferred. The 4 in high curb can only be used at locations where the 3 in curb will not be adequate. In new installations, do not use 6 in high curb in conjunction with beam guardrails. Existing 6 in high curb is allowed to remain in place. If work requires replacement of an existing 6 in curb, it must be replaced with a 3 in or 4 in curb, whichever is appropriate.

The preferred location of a curb, when used in conjunction with beam guardrail, is behind the face of the beam as shown in the Standard Plans.

Beam guardrail is usually galvanized and has a silver color. It can also be provided in a weathering steel that has a brown or rust color. Weathering steel guardrail might be desirable on Scenic Byways or Heritage Tour Routes. (See 710.05.)

(2) Terminals and Anchors

A guardrail anchor is required at the end of a run of guardrail to develop its tensile strength throughout its length. In addition, when the end of the guardrail is subject to head-on impacts, a crashworthy guardrail terminal is required. (See the Standard Plans.)

(a) **Buried Terminals.** The buried terminal (BT) is designed to terminate the guardrail by burying the end in a backslope. The BT is the preferred terminal because it eliminates the exposed end of the guardrail.

The BT uses a Type 2 anchor to develop the tensile strength in the guardrail. The entire BT can be used within the length of need.

The backslope required to install a BT must be 3H:1V or steeper and at least 4 ft in height above the roadway. Flare the guardrail into the backslope using a flare rate that meets the criteria in 710.05(3). Provide a 10H:1V or flatter foreslope into the face of the guardrail (and up to 4H:1V in the ditch section of the Type 2 buried terminal) and maintain the full guardrail height to the foreslope/backslope intersection. This might require filling ditches and installing culverts in front of the guardrail face.

(b) **Flared Terminal.** If a BT cannot be installed as described above, consider a flared terminal. (See Figure 710-13.) There are currently 2 acceptable sole source proprietary designs: the Slotted Rail Terminal (SRT) and the Flared Energy Absorbing Terminal (FLEAT). Both of these designs include an anchor for developing the tensile strength of the guardrail. The length of need begins at the third post for both flared terminals.

1. The SRT uses W-beam guardrail with slots cut into the corrugations and wood breakaway and controlled release terminal (CRT) posts that are designed to break away when hit. The end of the SRT is offset from the tangent guardrail run by the use of a parabolic flare. When struck head on, the first 2 posts are designed to break away and the parabolic flare gives the rail a natural tendency to buckle, minimizing the possibility of the guardrail end entering the vehicle. The buckling is facilitated by the slots in the rail. The CRT posts provide strength to the system for redirection and deceleration without snagging the vehicle.

The SRT has a 4 ft offset of the first post.

2. The FLEAT uses W-beam guardrail with a special end piece that fits over the end of the guardrail and wood breakaway and CRT posts. The end of the FLEAT is offset from the tangent guardrail run by the use of a straight flare. When struck head on, the end piece is forced over the rail, bending the rail and forcing it away from the impacting vehicle.

   The FLEAT is available in 2 designs based on the posted speed of the highway. For high speed highways (posted speed of 45 mph or greater) use a FLEAT 350 that has a 4 ft offset at the first post. For lower speed highways (posted speed of 40 mph or less), use a FLEAT TL-2 that has a 20 in offset at the first post.

When a flared terminal is specified, it is critical that embankment also be specified so that the area around the terminal can be flattened as shown on the Standard Plans. For every foot of height of the embankment, 13 cubic yards of "Embankment in Place" must be specified.

No snow load rail washers are allowed within the limits of these terminals.

The FHWA has granted approval to use these sole source proprietary terminals without justification on a project by project basis.

(c) **Nonflared Terminal.** Where widening to provide the offset for a flared terminal is not practical, consider a nonflared terminal. (See Figure 710-13.) There are currently two acceptable sole source proprietary designs; the ET PLUS and the Sequential Kinking Terminal (SKT). Both of these systems use W-beam guardrail with a special end piece that fits over the end of the guardrail and wood breakaway and CRT posts. When hit head-on, the end piece is forced over the rail and either flattens or bends the rail and then forces the rail away from the impacting vehicle.

Both of these terminals include an anchor for developing the tensile strength of the guardrail. The length of need begins at the third post for both terminals.

Both of these terminals are available in two designs based on the posted speed of the highway. The primary difference in these designs is the length of the terminal. For high speed highways (posted speed of 45 mph or greater), use the ET PLUS TL3 or SKT 350 that are 50 ft long. For lower speed highways (posted speed of 40 mph or less), use the ET PLUS TL2 or SKT-TL2 that are 25 ft long.

While these terminals do not require an offset at the end, a flare is recommended so that the end piece does not protrude into the shoulder. These terminals may have a 12 in offset to the first post. Four feet of widening is required at the end posts to ensure that the system is properly anchored. For every foot of height of embankment, 3 cubic yards of "Embankment in Place" must be specified.

No snow load rail washers are allowed within the limits of these terminals.

The FHWA has granted approval to use these sole source proprietary terminals without justification on a project by project basis.

(d) **Other Anchor Applications.** Use the Type 1 anchor to develop the tensile strength of the guardrail on the end of guardrail runs where a crashworthy terminal is not required. Use the Type 4 anchor to develop the tensile strength of the guardrail on the trailing end of guardrail runs along one-way highways. Use the Type 5 anchor with the Weak Post Intersection Design. (See 710.06(4) Cases 12 and 13.) Use the Type 7 anchor to develop tensile strength in the middle of a guardrail run when the guardrail curves and weak posts are used. (See 710.06(4) cases 9, 12, and 13.)

The old Type 3 anchor was primarily used at bridge ends. (See Figure 710-5.) This anchor consisted of a steel pipe mounted vertically in a concrete foundation. Bridge approach guardrail was then mounted on the steel pipe. On one-way highways, these anchors were usually positioned so that neither the anchor nor the bridge rail posed a snagging hazard. In these cases, the anchor may remain in place if a stiffened transition section is provided at the connection to the post. On two-way highways the anchor may present

a snagging hazard. In these cases, install a connection from the anchor to the bridge rail if the offset from the bridge rail to the face of the guardrail is 18 in or less. If the offset is greater than 18 in, remove the anchor and install a new transition and connection.

Locations where crossroads and driveways cause gaps in the guardrail require special consideration. Elimination of the need for the barrier is the preferred solution. Otherwise, a barrier flare might be required to provide sight distance. If the slope is 2H:1V or flatter and there are no hazards on or at the bottom of the slope, a terminal can be used to end the rail. Place the anchor of this installation as close as possible to the road approach radius PC. If there is a hazard at or near the bottom of the slope that cannot be mitigated, then the Weak Post Intersection Design (see 710.04(4) and the Standard Plans) can be used. This system can also be used at locations where a crossroad or road approach is near the end of a bridge and installing a bridge approach guardrail placement (including guardrail transition and terminal) is not possible.

(3) Transitions and Connections

When there is an abrupt change from one barrier type to a more rigid barrier type, a vehicle hitting the more flexible barrier is likely to be caught in the deflected barrier pocket and directed into the more rigid barrier. This is commonly referred to as pocketing. A transition stiffens the more flexible barrier by decreasing the post spacing, increasing the post size, and using stiffer beam elements to eliminate the possibility of pocketing.

When connecting beam guardrail to a more rigid barrier or a structure, or when a rigid object is within the deflection distance of the barrier, use the transitions and connections that are shown on Figures 710-6 and 10 and detailed in the Standard Plans. The transition pay item includes the connection.

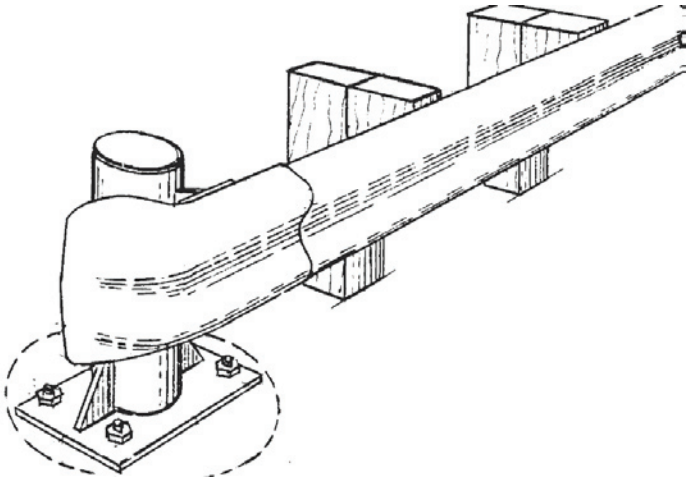

Old Type 3 Anchor
Figure 710-5

	Connection
Unrestrained concrete barrier	A
Rigid untapered safety shaped bridge rails or barriers (1)	B
Bridge rails with curbs 9 in or less in width	B
Bridge rails with curbs between 9 and 18 in wide	C
Vertical walls or tapered safety shape barrier (1)	D

(1) New safety shaped bridge rails are designed with the toe of the barrier tapered so that it does not project past the face of the approach guardrail.

Guardrail Connections
Figure 710-6

(4) Guardrail Placement Cases

The Standard Plans contain placement cases that show all of the beam guardrail elements required for typical situations. The following is a description of each.

Case 1 is used only where there is one-way traffic. It uses a crashworthy terminal on the approach end and a Type 4 anchor on the trailing end.

Case 2 is used where there is two-way traffic. A crashworthy terminal is used on both ends. When flared terminals are used on both ends, a minimum of 25 ft of guardrail is required between the terminal limits.

Case 3 is used at railroad signal supports on one-way or two-way roadways. A terminal is used on the approach end but usually cannot be used on the trailing end because of its proximity to the railroad tracks. For one-way roadways, a Type 4 anchor is used on the trailing end. On two-way roadways a Type 1 anchor is used on the trailing end. If there is a history of crossover accidents, consider additional protection, such as an impact attenuator.

Case 4 is used where guardrail on the approach to a bridge is to be shifted laterally to connect with the bridge rail. A terminal is used on the approach end and a transition is required at the bridge end. A curve in the guardrail is shown to shift it to the bridge rail. However, the length of the curve is not critical and the only requirement is to provide a smooth curve that is not more abrupt than the allowable flare rate. (See Figure 710-3.)

Case 5 is a typical bridge approach where a terminal and a transition are required.

Case 6 is used on bridge approaches where opposing traffic is separated by a median that is 36 ft or wider. This case is designed so that the end of the guardrail will be outside of the clear zone for the opposing traffic.

Cases 7 and 8 are used with beam guardrail median barrier when median hazards such as bridge piers are encountered. A transition is required on the approach end for each direction and the flare rate must not be more abrupt than the allowable flare rate. (See Figure 710-3.)

Case 9 is used on bridge approaches where opposing traffic is separated by a median less than 36 ft wide. This design, called a "Bull Nose Terminal," treats both bridge ends and the opening between the bridges. The "nose" is designed to collapse when struck head-on and the ribbon strength of the rail brings the vehicle to a controlled stop. Type 7 anchors are installed on each side of the nose to develop the ribbon strength.

Since an impacting vehicle will penetrate into the system, it is critical that no fixed object be located within the first 30 ft of the system.

Case 10 (A, B, and C) is used at roadside hazards (such as bridge piers) when 3 ft or more is available from the face of the guardrail to the hazard. The approach end is the same for one-way or two-way traffic. Case 10A is used with two-way traffic and, therefore, a terminal is required on the trailing end. Case 10B is used for one-way traffic when there is no need to extend guardrail past the bridge pier and a Type 4 anchor is used to end the guardrail. Case 10C is used for one-way traffic when the guardrail will extend for a distance past the bridge pier.

Case 11 (A, B, and C) is used at roadside hazards (such as bridge piers) when the guardrail is to be placed within 3 ft of the hazard. Since there is no room for deflection, the rail in front of the hazard must be considered a rigid system and a transition is necessary. The trailing end cases are the same as described for Placement Case 10.

Cases 12 and 13 are called "Weak Post Intersection Designs." They are used where an intersection requires a gap in the guardrail or there is not adequate space for a bridge approach installation that includes a transition and/or terminal. These placements are designed to collapse when hit at the nose, and the ribbon strength of the rail brings the vehicle to a stop. A Type 7 anchor is used to develop the ribbon strength. These designs include a Type 5 transition for connection with bridge rail and a Type 5 anchor at the other end of the rail. The Type 5 anchor is not a breakaway anchor and, therefore, can only be used on low speed side roads and driveways.

Since an impacting vehicle will penetrate into the system, it is critical that no fixed object be located within the clear area shown on the standard plan. The 25 ft along the side road is critical for the operation of this system.

These designs were developed for intersections that are approximately perpendicular. Evaluate installation on skewed intersections on a case-by-case basis. Use the Case 22 placement if it is not feasible to install this design according to the standard plan.

Case 14 shows the approach rail layout for a Service Level 1 bridge rail system. Type 20 guardrail is used on the approach and no transition is required between the Type 20 guardrail and the Service Level 1 bridge rail since they are both weak post systems. A Type 6 transition is used when connecting the Type 20 to a strong post guardrail or a terminal.

Case 15 is used to carry guardrail across a box culvert where there is insufficient depth to install standard posts for more than 17.7 ft. This design uses steel posts anchored to the box culvert to support the rail. Newer designs, Cases 19, 20, and 21, have replaced this design for shorter spans.

Cases 16 and 17 are similar to Cases 1 and 2, except that they flare the rail and terminal as far from the road as possible and reduce the length of need.

Case 18 is used on the trailing end of bridge rail on a one-way roadway. No transition is necessary.

Cases 19 (A and B) are used where it is not possible to install a post at the 6.25 ft spacing. These designs omit one post (which results in a span of 11.5 ft which is consistent with a post spacing of 12.5 ft) and use nested W-beam to stiffen the rail. The cases differ by the location of the splice. No cutting of the rail or offsetting of the splices is necessary or desirable.

Case 20 is similar to Cases 19A and B, except that it allows for two posts to be omitted (which results in a span consistent with a post spacing of 18.75 ft).

Case 21 has a similar intent as Cases 19A, 19B, and 20 in that it allows for the omission of posts to span an obstruction. This design uses CRT posts with additional post blocks for three posts before and after the omitted posts. The design allows for 3 posts to be omitted (which results in a span consistent with a post spacing of 25 ft).

Case 22 is the Strong Post Intersection Design that provides a stiff barrier. This design is only to be used as a last resort at crossroads or road approaches where a barrier is necessary and there isn't a clear area behind the nose or minimum distances for a "Weak Post Intersection Design." (See Cases 12 and 13.)

710.07 Cable Barrier

Cable barrier is a flexible barrier system that can be used on a roadside or as a median barrier.

This system consists of three steel cables mounted to steel posts (weak posts). The maximum spacing for the steel posts is 16 ft on tangent sections and curves of 700 ft radius or greater. A deflection of 11.5 ft is anticipated with this post spacing. A smaller spacing is required on radii less than 700 ft. For tangent sections and large radius curves, the deflection can be reduced to 7 ft by reducing the post spacing to 4 ft.

At each end of the barrier run, the cable is turned down and anchored to concrete blocks. A coil spring and turnbuckle are required on each cable to maintain tension on the system.

Cable barrier can be installed up to one foot in front of side slopes as steep as 2H:1V. This barrier is the only barrier that can be placed on a side slope steeper than 10H:1V within the 12 ft

area immediately beyond the breakpoint. Do not place this barrier on a side slope steeper than 6H:1V. Figure 710-14 shows the placement of cable barrier.

When cable barrier is to be connected to a more rigid barrier, a transition section is required. Contact the HQ Design Office for details.

The primary advantage of cable barrier is that it provides effective vehicle containment and redirection while imposing the lowest deceleration forces on the vehicle's occupants. It also has advantages in heavy snowfall areas and it does not present a visual barrier, which may make it desirable on Scenic Byways. (See 710.05.)

Maintenance is a consideration because routine maintenance is necessary to keep tension in the cables and a comparatively long run of cable barrier will have to be repaired after an impact. However, the effort (time and materials) required to maintain and repair cable barrier is much less than the effort required for a W-beam system.

710.08 Concrete Barrier

Concrete barriers are rigid or unrestrained rigid systems. They are also used as shoulder barriers. These systems are stiffer than beam or cable barrier and impacts with these barriers will tend to be more severe.

Light standards mounted on top of concrete median barrier must not have breakaway features. See the Standard Plans for the concrete barrier light standard section.

Where drainage might be a problem, contact the HQ Hydraulics Branch for guidance.

(1) Concrete Barrier Shapes

Concrete barriers use a safety shaped (New Jersey shape and, on bridges, the F-Shape) or single-sloped face to redirect vehicles while minimizing vehicle vaulting, rolling, and snagging. A comparison of these barrier shapes is shown on Figure 710-7.

The New Jersey shaped face is used on precast concrete barrier.

The single-slope barrier face is recommended when separating roadways with different elevations (stepped medians). The single-slope barrier face can be used for bridge rails (median or outside) when it is to be used on any approach to a bridge and an existing bridge rail is to be replaced.

The F-Shape face is used on all other bridge rails and on cast-in-place barrier where the New Jersey and single-slope face are not appropriate. When the F-Shape face is used and precast barrier is to be used on the approaches, a cast-in-place transition section is required so that no vertical edges of the barriers are exposed to oncoming traffic. For details on the F-Shape barrier or any of the bridge rail designs, see the *Bridge Design Manual*.

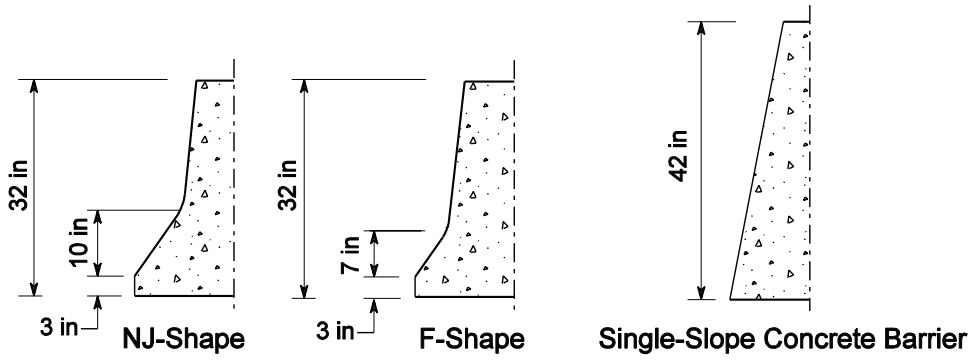

Concrete Barrier Shapes
Figure 710-7

For aesthetic reasons, avoid changes in the shape of the barrier face within a project or corridor.

(a) **New Jersey Shape Barrier.** The New Jersey shaped face is primarily used on precast concrete barrier.

Concrete barrier Type 2 (see the Standard Plans) is a precast barrier that has the New Jersey shape on two sides and can be used for both median and shoulder installations. This barrier is 32 in in height, which includes 3 in for future pavement overlay.

The cost of precast Type 2 barrier is significantly less than the cost of the cast-in-place barriers. Therefore, consider the length of the barrier run to determine whether transitioning to precast Type 2 barrier is desirable. If precast Type 2 barrier is used for the majority of a project, use the New Jersey face for small sections that require cast-in-place barrier, such as for a light standard section.

Concrete barrier Type 4 is also a precast, single-faced New Jersey shaped barrier. These units are not freestanding and must be placed against a rigid structure or anchored to the pavement. If Type 4 barriers are used back to back, consider filling any gap between them to prevent tipping.

Concrete barrier Type 5 is a precast barrier that has a single New Jersey face and is intended for use at bridge ends where the flat side is highly visible. Both Type 2 and Type 5 designs are freestanding, unanchored units connected with steel pins through wire rope loops. For permanent installation, this barrier is placed on a paved surface and a 2 ft wide paved surface is provided beyond the barrier for its displacement during impact. (See Chapter 640.)

Precast barrier can be anchored where a more rigid barrier is desired. Anchoring methods are shown in the Standard Plans. The Type 1 and 2 anchors are for temporary installations on a rigid pavement. Type 3 anchors can be used in temporary or permanent installations on an asphalt pavement. Consult the Bridge and Structures Office for details when anchoring permanent precast concrete barrier to a rigid pavement.

Precast barrier used on the approach to bridge rail must be connected to the bridge rail by installing wire rope loops embedded 15 in into the bridge rail with epoxy resin.

For unrestrained (unanchored) precast concrete barrier, the preferred foundation slope is 5 percent or flatter with a maximum of 8 percent. Keep the slope of the area between the edge of the shoulder and the face of the traffic barrier as flat as possible. The maximum slope is 10H:1V (10 percent).

(b) **Single Slope Barrier.** The single slope concrete barrier can be cast-in-place, slipformed, or precast. The most common construction technique for this barrier has been slipforming but some precast single slope barrier has been installed. The primary benefit of using precast barrier is that it can be used as temporary barrier during construction and then reset into a permanent location.

This barrier is considered a rigid system regardless of the construction method used. For new installations, the minimum height of the barrier above the roadway is 34 in which allows 2 in for future overlays. The minimum total height of the barrier section is 42 in with a minimum of 3 in embedded in the roadway wearing surface. This allows for use of the barrier between roadways with grade separations of up to 5 in. For greater grade separations, the barrier must have a depth of embedment equal to or greater than the grade separation or have an equivalent structural foundation. Contact Bridge and Structures for barrier heights over 54 in. (See the Standard Plans.)

(2) Concrete Barrier Terminals

Whenever possible, bury the end of the concrete barrier in the backslope. The backslope required to bury the end must be 3H:1V or steeper and at least 4 ft in height above the roadway. Flare the concrete barrier into the backslope using a flare rate that meets the criteria in 710.05(3). Provide a 10H:1V or flatter foreslope into the face of the barrier and maintain the full barrier height to the foreslope/backslope intersection. This might require filling ditches and installing culverts in front of the barrier face.

A precast or cast-in-place terminal section having a minimum length of 48 ft and a maximum length of 80 ft is another end treatment. It can only be used for posted speeds of 35 mph or less. Contact the HQ Design Office for details on this end treatment.

The 7 ft long precast concrete terminal end section for Concrete Barrier Type 2 may be used:

- Outside the Design Clear Zone.
- On the trailing end of the barrier when it is outside the Design Clear Zone for opposing traffic.
- On the trailing end of one-way traffic.
- Where the posted speed is 25 mph or less.

When the Barrier Terminals and Transitions column of a design matrix applies to a project, existing sloped down concrete terminals that are within the Design Clear Zone must be replaced when they do not meet the criteria above.

When the end of a concrete barrier cannot be buried in a backslope or terminated as described above, terminate the barrier using a guardrail terminal and transition or an impact attenuator. (See Chapter 720.)

(3) Assessing Impacts to Wildlife

The placement of concrete barriers in locations where wildlife frequently cross the highway can influence traffic safety and wildlife mortality. When wildlife encounter physical barriers that are difficult for them to cross, they often travel parallel to those barriers. With traffic barriers, this means that they often remain on the highway for a longer period, increasing the risk of wildlife/vehicle collisions or vehicle/vehicle collisions as motorists attempt avoidance.

Traffic-related wildlife mortality may play a role in the decline of some species listed under the Endangered Species Act. To address public safety and wildlife concerns, see Figure 710-8 to determine if concrete barrier placement requires an evaluation by the Environmental Office to determine its effect on wildlife. Make this evaluation early in the project development process to allow adequate time for discussion of options.

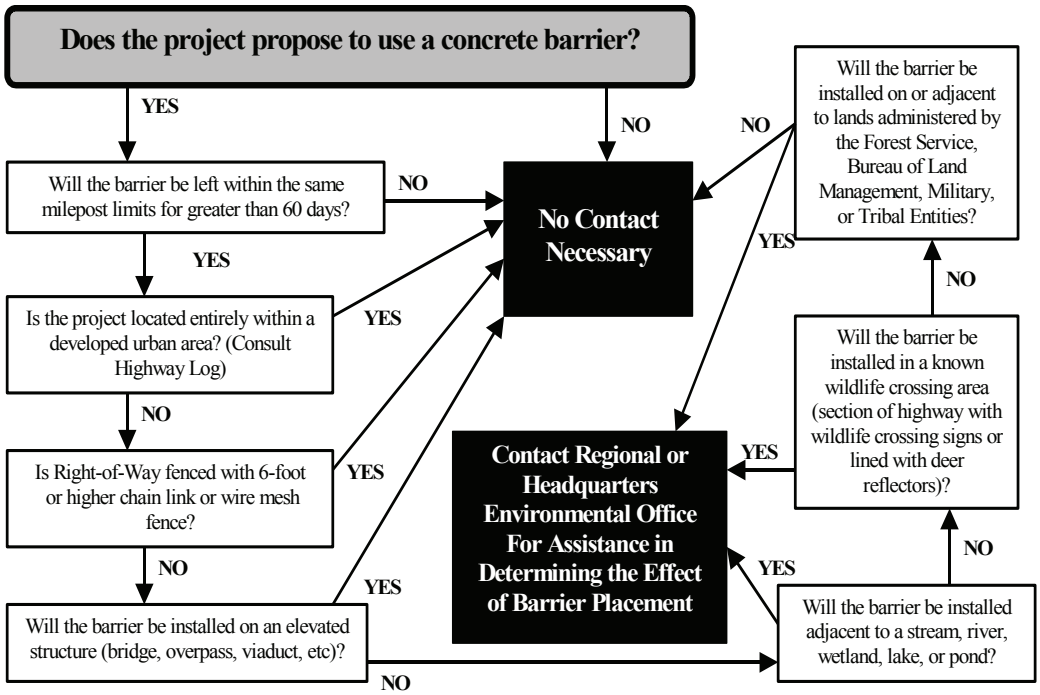

Concrete Barrier Placement Guidance
Figure 710-8

710.09 Special Use Barriers

The following barriers may be used on designated Scenic Byway and Heritage Tour routes if funding can be arranged. (See 710.05 and Chapter 120.)

(1) Steel Backed Timber Guardrail

Steel backed timber guardrails consist of a timber rail with a steel plate attached to the back to increase it's tensile strength. There are several variations of this system that have passed crash tests. The nonproprietary systems use a beam with a rectangular cross section that is supported by either wood or steel posts. A proprietary (patented) system called the Ironwood guardrail is also available. This system uses a beam with a round cross section and is supported by steel posts with a wood covering to give the appearance of an all-wood system from the roadway. The Ironwood guardrail can be allowed as an alternate to the nonproprietary system. However, specifying this system exclusively requires the approval, from the Assistant State Design Engineer, of a public interest finding for the use of a sole source proprietary item.

The most desirable method of terminating the steel backed timber guardrail is to bury the end in a back slope as described in 710.06(2). When this type of terminal is not possible, the use of the barrier is limited to highways with speeds of 45 mph or less. On these lower speed highways, the barriers can be flared away from the traveled way and terminated in a berm.

For details of these systems, contact the HQ Design Office.

(2) Stone Guardwalls

Stone guardwalls function like rigid concrete barriers but have an appearance of natural stone. These walls can be constructed of stone masonry over a reinforced concrete core wall or of simulated stone concrete. These types of barriers are designed to have a limited projection of the stones that will not affect the redirectional characteristics of the barrier. The most desirable method of terminating this barrier is to bury the end in a backslope as described in 710.08(2). When this type of terminal is not possible, the use of the barrier is limited to highways with posted speeds of 45 mph or less. On these lower speed highways, the barrier can be flared away from the traveled way and terminated in a berm.

For details of these systems, contact the HQ Design Office.

710.10 Bridge Rails

Bridge rails are traffic barriers that redirect errant vehicles and prevent them from going over the side of the structure. See the *Bridge Design Manual* for information on bridge rail on new bridges and replacement bridge rail on existing bridges.

For most new bridge rail installations, use a 32 in high safety shape (F Shape) bridge rail. The single slope bridge rail that is 34 in high can be used to be consistent with the heights of connecting single slope barrier (710.08(1)(b)).

Use taller, 42 in, safety shape or single slope bridge rails on Interstate or freeway routes where accident history suggests a need or where roadway geometrics increase the possibility of larger trucks hitting the barrier at a high angle (such as on ramps for freeway to freeway connections with sharp curvature in the alignment).

For bridges where high volumes of pedestrian traffic are anticipated, see Chapter 1020 for further guidance.

Approach barriers, transitions, and connections are usually required on all four corners of bridges carrying two-way traffic and on both corners of the approach end for one-way traffic. See 710.06(3) for guidance on transitions.

If the bridge rail system does not meet the criteria for strength and geometrics, modifications to improve its redirectional characteristics and its strength may be required. The modifications can be made using one of the retrofit methods described below.

(1) Concrete Safety Shape

Retrofitting with a new concrete bridge rail (see Figure 710-9) is costly and requires justification when no widening is proposed. Consult the Bridge and Structures Office for design details and to determine if the existing bridge deck and other superstructure elements are of sufficient strength to accommodate this bridge rail system.

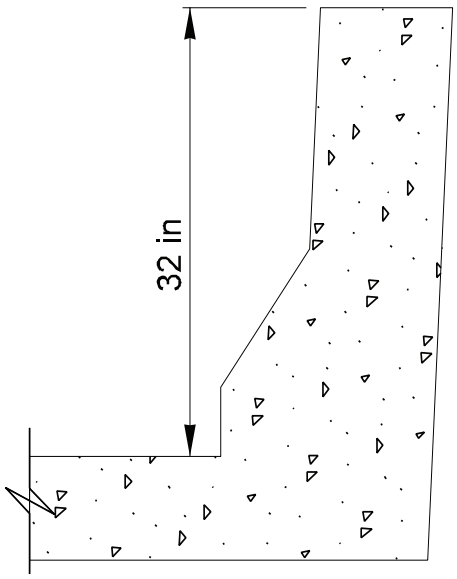

Safety Shaped Concrete Bridge Rail Retrofit
Figure 710-9

(2) Thrie Beam Retrofit

Retrofitting with thrie beam is an economical way to improve the strength and redirectional performance of bridge rails. The thrie beam can be mounted to steel posts or the existing bridge rail, depending on the structural adequacy of the bridge deck, the existing bridge rail type, the width of curb (if any), and the curb-to-curb roadway width carried across the structure.

The Bridge and Structures Office is responsible for the design of thrie beam bridge rail. A key concern is that the existing bridge deck has adequate strength to withstand an impact without causing significant damage to the deck. Contact the Bridge and Structures Office for assistance with thrie beam retrofit design.

Consider the Service Level 1 (SL-1) system on bridges with wooden decks and for bridges with concrete decks that do not have adequate strength to accommodate the thrie beam system. Contact the Bridge and Structures Office for information required for the design of the SL-1 system.

Figure 710-15 shows typical installation criteria.

Many bridge rail retrofit projects involve bridges over 250 feet in length. These projects will normally be funded from the I2 program. Shorter bridges may be funded as a spot safety improvement. Contact HQ Project Control and Reporting for clarification.

710.11 Other Barriers

(1) Dragnet

The Dragnet Vehicle Arresting Barrier consists of chain link or fiber net that is attached to energy absorbing units. When a vehicle hits the system, the Dragnet brings the vehicle to a controlled stop with a minimum of damage. Possible uses for this device are as follows:

- Reversible lane entrances and exits.
- Railroad crossings.
- Truck escape ramps (instead of arrester beds – Chapter 1010).
- T-intersections.
- Work zones.

For permanent installations, this system can be installed between towers that lower the unit into position when needed and lift it out of the way when it is no longer needed. For work zone applications, it is critical to provide deflection space for stopping the vehicle between the system and the work zone. For additional information on the Dragnet, contact the HQ Design Office.

710.12 Documentation

A list of documents that are to be preserved [in the Design Documentation Package (DDP) or the Project File (PF)] is on the following website: http://www.wsdot.wa.gov/eesc/design/projectdev/

Connecting W-Beam Guardrail to: Transitions and Connections			Transition Type*	Connection
Bridge Rail	New		1(1) 4(5)	D
	Existing Concrete Parapet	> 20 inches	1(1) 4(5)	Figure 710-6
		< 20 inches	2 4(5)	Figure 710-6
		Existing W-Beam Transition	2(2)(6) 4(5)	(2)
	Thrie Beam at face of curb(4)	Approach end	10	na
		Trailing end (two way traffic only)	11 12	na
	Thrie Beam at bridge rail (curb exposed) (4)	Approach end	13	na
		Trailing end (two way traffic only)	14 15	na
	Weak Post Intersection Design (see 710.06(4) cases 12 & 13)		5	Figure 710-6
Concrete Barrier	Rigid/ Restrained		1 4(5)	Figure 710-6
	Unrestrained		2 4 (5)	A
Weak Post Barrier Systems (Type 20 and 21)			6	na
Rigid Structures such as Bridge Piers	New installation(see Case 11)		16 17 18	na
	Existing W-Beam Transition		(3)	na
Connecting Thrie Beam Guardrail to:				
Bridge Rail or Concrete Barrier	New installation (example - when used with thrie beam bull nose)		1B	Figure 710-6

*Consult section C of the Standard Plans for detail on transition types.

(1) A Type 1A transition can be used where there is a problem placing a post within 2'-5" from the end of the bridge in which case a B or E connection is required. When the E connection is to be used, a special detail for the end of the bridge is required. Contact the HQ Bridge and Structures Office.

(2) If work requires reconstruction or resetting of the transition, upgrade as shown above. Raising the guardrail is not considered reconstruction. If the transition is not being reconstructed, the existing connection may remain in place. See 710.06(2)(d) for guidance when Type 3 anchors are encountered.

(3) For new/reconstruction, use Case 11 (thrie beam). For existing Case 11 with W-beam, add (nest) a second W- beam rail element.

(4) For Service Level 1 bridge rail see 710.06(4), case 14.

(5) Use on highways with speeds 45 MPH or less.

(6) If existing transition has adequate guardrail height, three 10"x10" (nominal) posts and three 6"x8" (nominal) posts spaced 3'-1.5" apart, it is acceptable to nest existing single W-beam element transitions.

Transitions and Connections
Figure 710-10

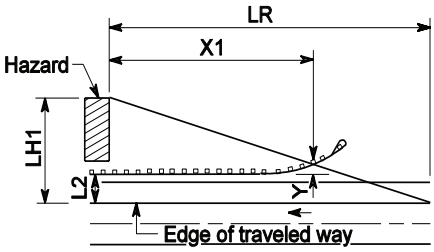

$$X1 = \frac{LH1 - (L2+Y)}{(LH1/LR)}$$

Adjacent-Side Hazard
Barrier Parallel to Roadway

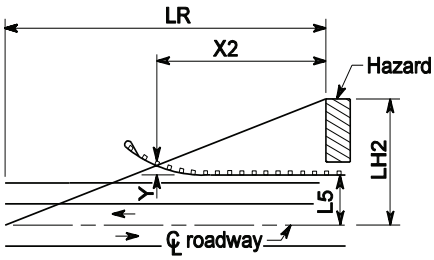

$$X2 = \frac{LH2 - (L5+Y)}{(LH2/LR)}$$

Opposite-Side Hazard
Barrier Parallel to Roadway

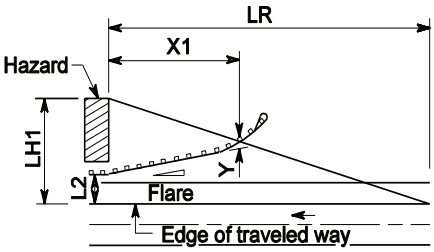

$$X1 = \frac{LH1 - (L2+Y)}{(1/F) + (LH1/LR)}$$

Adjacent-Side Hazard
Barrier Flare Begins at Hazard

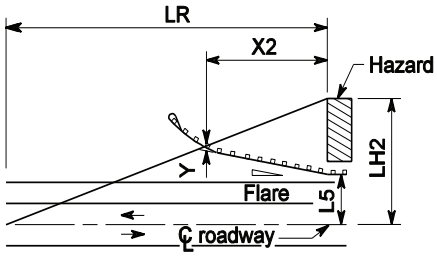

$$X2 = \frac{LH2 - (L5+Y)}{(1/F) + (LH2/LR)}$$

Opposite-Side Hazard
Barrier Flare Begins at Hazard

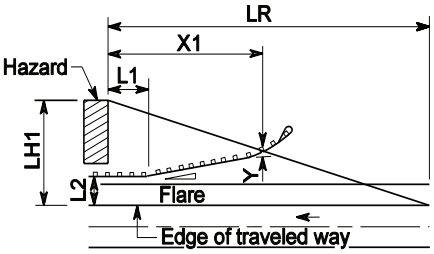

$$X1 = \frac{(LH1 + L1/F) - (L2+Y)}{(1/F) + (LH1/LR)}$$

Adjacent-Side Hazard
Barrier Flare Begins Before Hazard

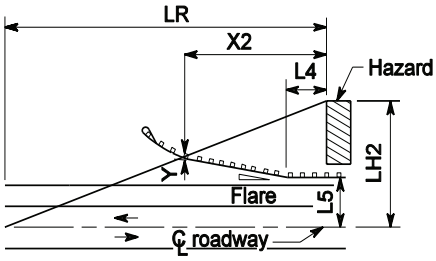

$$X2 = \frac{(LH2 + L4/F) - (L5+Y)}{(1/F) + (LH2/LR)}$$

Opposite-Side Hazard
BarrierFlare Begins Before Hazard

Barrier Length of Need
Figure 710-11a

L1 = Length of barrier parallel to roadway from adjacent-side hazard to beginning of barrier flare. This is used if a portion of the barrier cannot be flared (such as a bridge rail and the transition).

L2 = Distance from adjacent edge of traveled way to portion of barrier parallel to roadway.

L4 = Length of barrier parallel to roadway from opposite-side hazard to beginning of barrier flare.

L5 = Distance from center line of roadway to portion of barrier parallel to roadway. Note: if the hazard is outside of the Design Clear Zone when measured from the center line, it may only be necessary to provide a crashworthy end treatment for the barrier.

LH1 = Distance from outside edge of traveled way to back side of adjacent-side hazard. Note: if a hazard extends past the Design Clear Zone, the Design Clear Zone can be used as LH1.

LH2 = Distance from center line of roadway to back side of opposite-side hazard. Note: if a hazard extends past the Design Clear Zone, the Design Clear Zone can be used as LH2.

LR = Runout length (measured parallel to roadway).

X1 = Length of need for barrier to shield an adjacent-side hazard.

X2 = Length of need for barrier to shield an opposite-side hazard.

F = Flare rate value.

Y = Offset distance required at the beginning of the length of need.

Different end treatments require different offsets.

For the SRT 350 and FLEAT 350, use Y = 1.8 ft.

For evaluating existing BCT's, use Y = 1.8 ft.

For the FLEAT TL-2, use Y = 0.8 ft.

No offset is required for the nonflared terminals, or impact attenuator systems. Use Y = 0.

Buried terminal end treatments are used with barrier flares and have no offset. Use Y = 0.

Design Parameters							
Posted Speed	ADT						
	Over 10,000	5,000 to 10,000	1,000 to 4,999	Under 1,000	Rigid Barrier	Unrestrained Barrier	Semirigid Barrier
(mph)	LR (ft)	LR (ft)	LR (ft)	LR (ft)	F	F	F
70	460	395	345	295	20	18	15
60	360	295	260	230	18	16	14
55	310	260	230	195	16	14	12
50	260	215	180	165	14	12	11
45	245	195	165	150	12	11	10
40	215	180	150	130	11	10	9

Barrier Length of Need
Figure 710-11b

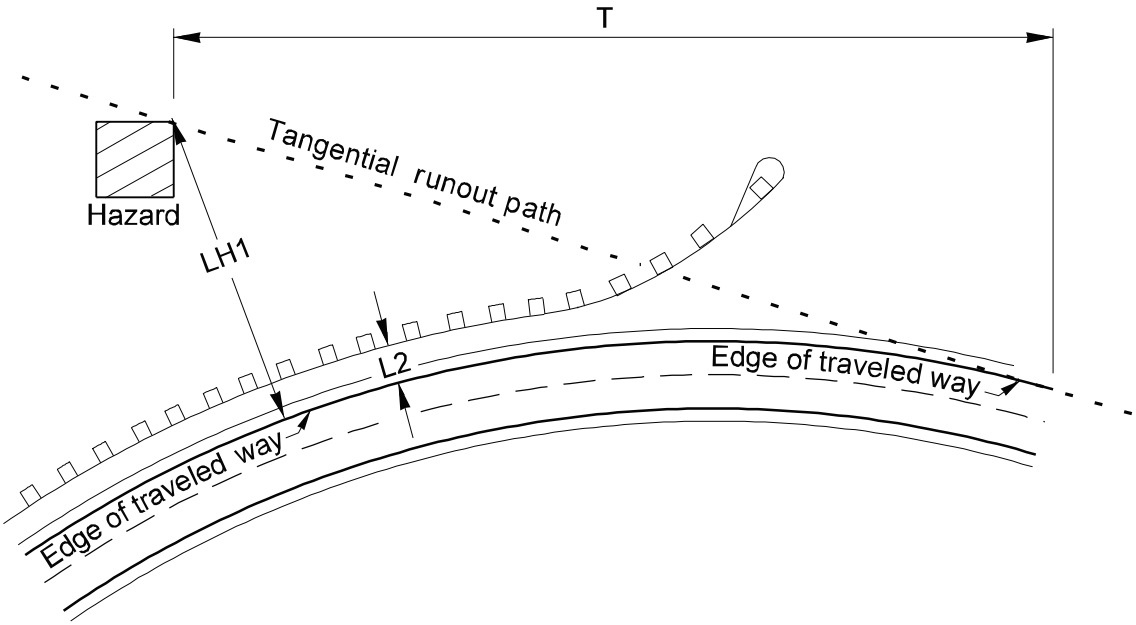

Note:

This is a graphical method for determining the length of need for barrier on the outside of a curve. On a scale drawing, draw a tangent from the curve to the back of the hazard. Compare T to LR from Figure 710-11b and use the shorter value.

If using LR, follow Figures 710-11a and b.

If using T, draw the intersecting barrier run to scale and measure the length of need.

Barrier Length of Need on Curves
Figure 710-11c

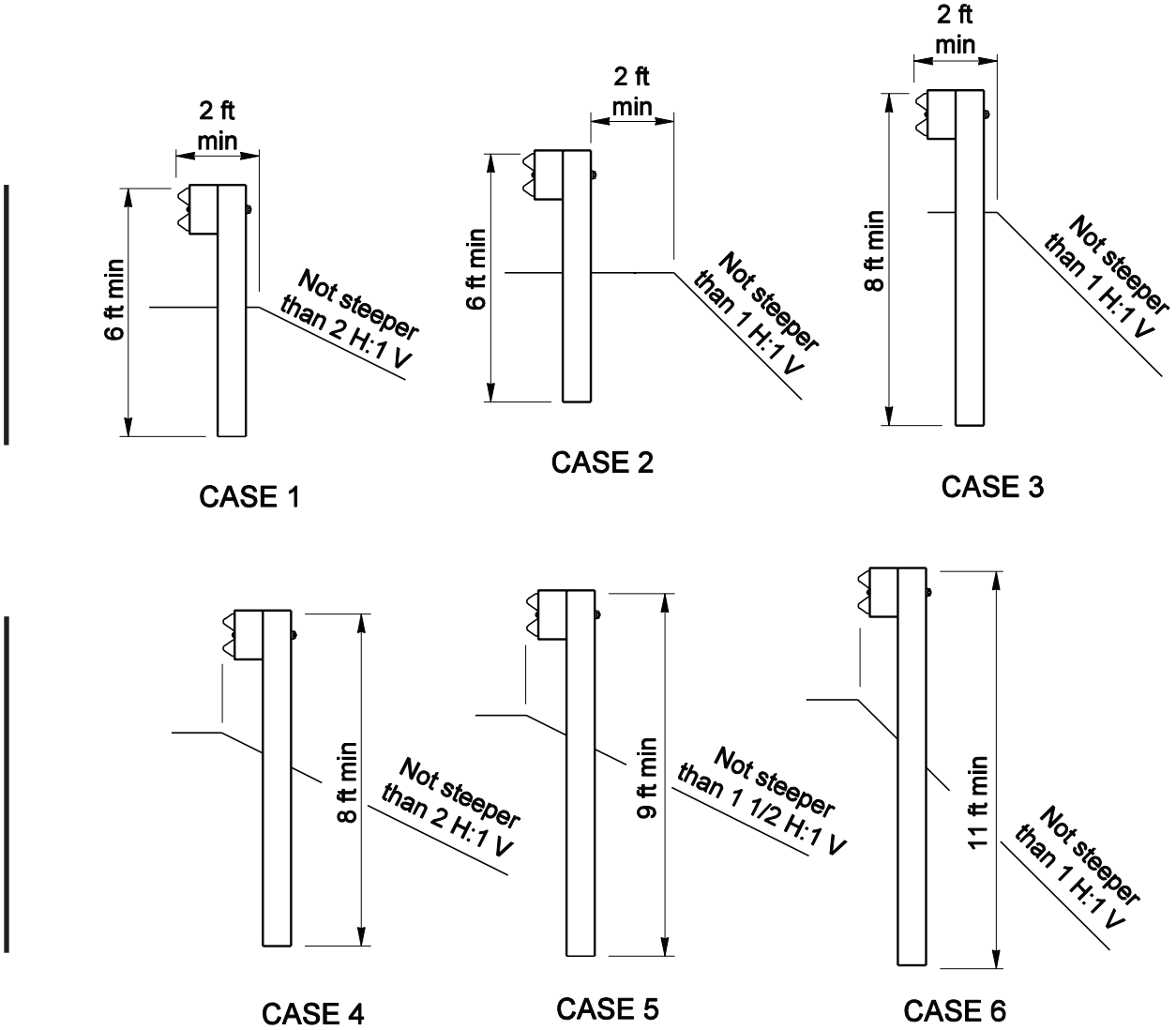

Notes:

Use cases 1, 2, and 3 when there is 2 ft or greater shoulder widening from face of guardrail to the breakpoint.

Use cases 4, 5, and 6 when there is less than 2 ft shoulder widening from face of guardrail to the breakpoint.

Beam Guardrail Post Installation
Figure 710-12

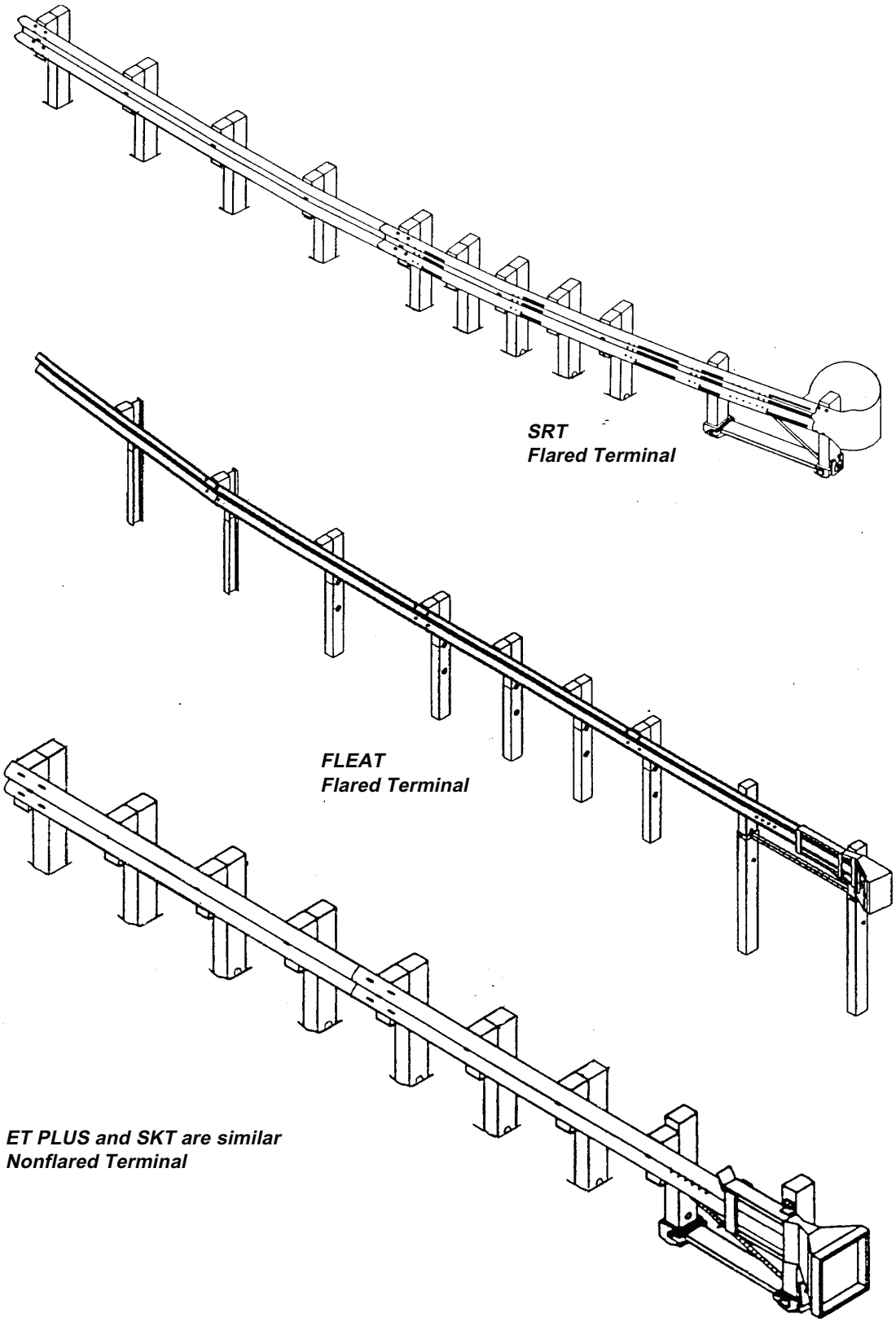

Beam Guardrail Terminals
Figure 710-13

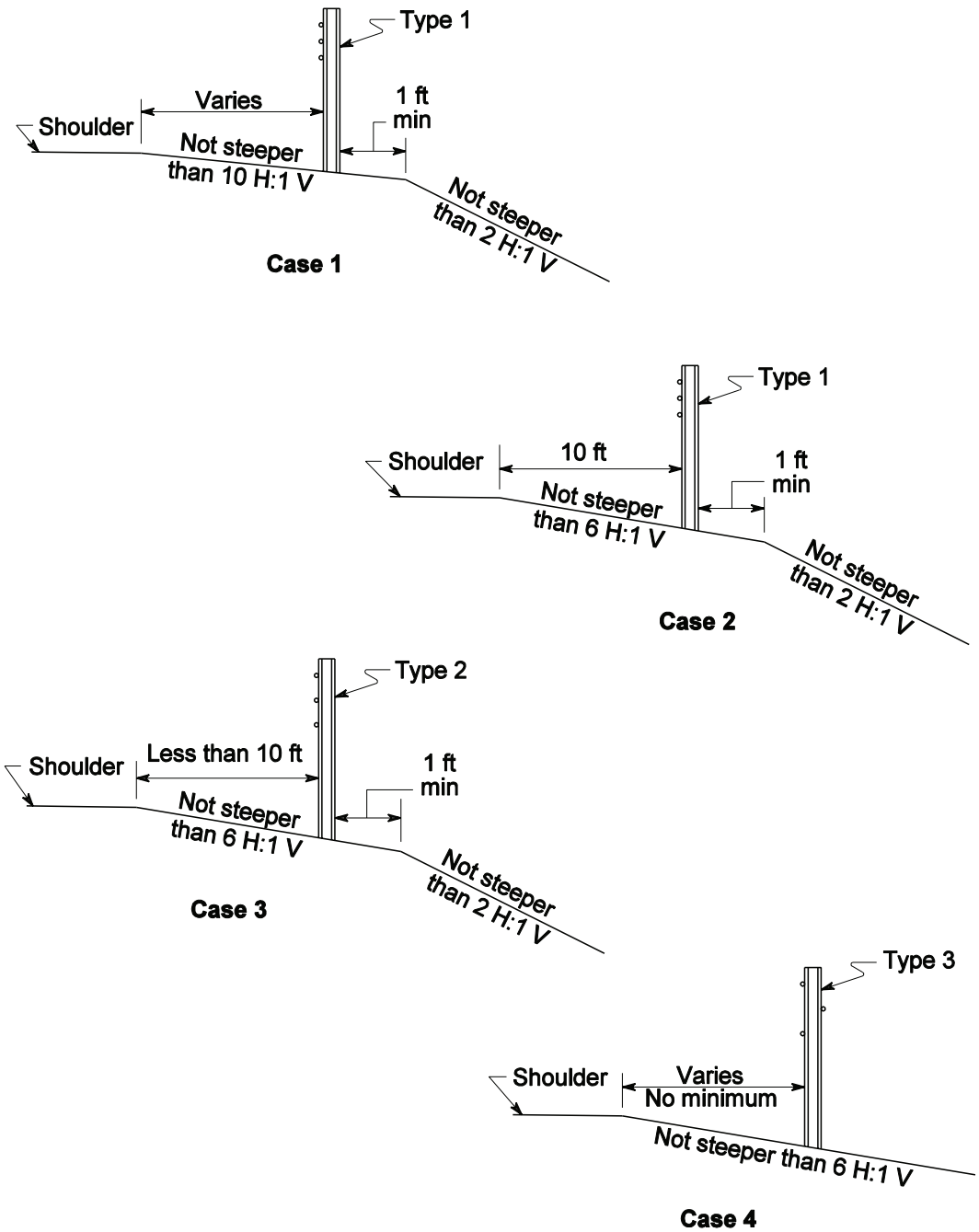

Cable Barrier Locations on Slopes
Figure 710-14

		Concrete Bridge Deck		Wood Bridge Deck or Low Strength Concrete Deck
Curb Width	**Bridge Width**	**Concrete Bridge Rail (existing)**	**Steel or Wood Post Bridge Rail (existing)**	
< 18 in		Thrie beam mounted to existing bridge rail[2] and blocked out to the face of curb. Height = 32 in	Thrie beam mounted to steel posts[2] at the face of curb. Height = 32 in	Service Level 1 Bridge Rail[2]
> 18 in	**> 28 ft (curb to curb)**	Thrie beam mounted to steel posts[2] at the face of curb[1]. Height = 32 in		Height = 32 in
> 18 in	**< = 28 ft (curb to curb)**	Thrie beam mounted to existing bridge rail[2]. Height = 35 in	Thrie beam mounted to steel posts[2] in line with existing rail. Height = 35 in	Curb or wheel guard must be removed

(1) Thrie beam may be mounted to the bridge rail to accommodate pedestrians (height = 35 in).

(2) Contact the Bridge and Structures Office for design details on bridge rail retrofit projects.

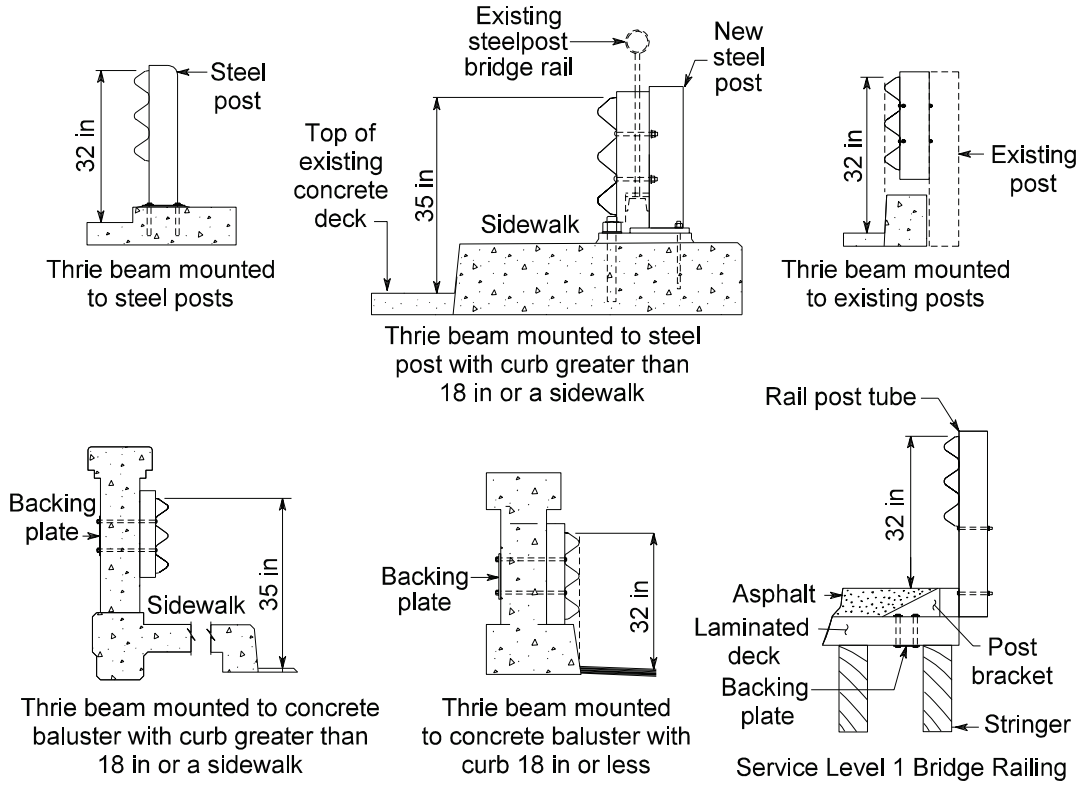

Thrie Beam Bridge Rail Retrofit Criteria
Figure 710-15

810.01 General
810.02 References
810.03 Public Information
810.04 Work Zone Classification
810.05 Work Zone Types
810.06 Project Definition
810.07 Work Zone Safety
810.08 Regulatory Traffic Control Strategies
810.09 Traffic Control Plans and Devices
810.10 Documentation

810.01 General

Highway improvements always have some impact on the users of that facility during the construction phase. The various activities required to improve the highway cannot be undertaken without some disruption to the existing traffic patterns. In all but a very few instances the public must have some form of access through or around the work site. The planning, design, and preparation of contract documents for the modification of these traffic patterns during construction is known as work zone traffic control. The frequency of traffic collisions in work zones is disproportionately higher than at any other highway location and the primary consideration in providing work zone traffic control is safety. Safety is the primary consideration for all people within the work zone, the motorist, pedestrians, bicyclists, contractor's workers, agency's inspectors, surveyors, and other personnel on the site.

Maintaining the optimum carrying capacity of an existing facility during construction is usually not possible. As construction progresses, existing traffic lanes will be either temporarily narrowed or closed and will reduce the highway's capacity. Even when the construction work does not affect adjacent traffic lanes, slowdowns in the traffic flow are common because these activities can be a distraction to the motorist. Providing improvements to alternate routes of travel, widening temporary traffic lanes, staging work to occur in off-peak traffic hours, and other means of offsetting the capacity reduction are part of a comprehensive work zone traffic control strategy. The impacts these operations have on the traffic flow are important, but not at the expense of safety. The construction activities that disrupt or reduce traffic flow can often be scheduled for time periods when the traffic volume is minimal.

810.02 References

Manual on Uniform Traffic Control Devices USDOT, Washington DC, including the *Washington State Modifications to the MUTCD*, WSDOT (MUTCD) http://www.wsdot.wa.gov/biz/trafficoperations/mutcd.htm

Planning and Scheduling Work Zone Traffic Control, USDOT, 1981

Directive D 55-20, Reduced speed in maintenance and construction zones.

Instructional Letter IL 4008.00, WSP traffic control assistance in work zones.

Standard Plans for Road, Bridge, and Municipal Construction (Standard Plans), M 21-01, WSDOT

Standard Specifications for Road, Bridge and Municipal Construction (Standard Specifications), M 41-10, WSDOT

Plans Preparation Manual, M 22-31, WSDOT

Traffic Manual, M 51-02, WSDOT

Construction Manual, M 41-01, WSDOT

Work Zone Traffic Control Guidelines, M 54-44, WSDOT

Highway Capacity Manual, 2000, TRB

810.03 Public Information

Accurate and timely reporting of project information to the public is a valuable element in the overall traffic control strategy. The use of public information resources, such as newspapers, radio, and television, can greatly improve the public's perception and acceptance of the necessary delays and other inconveniences caused by the project's construction. The potential benefits derived from this effort are:

- Advanced notice might encourage motorists to seek alternate routes around the project.

- Reduced traffic volume and driver awareness might result in fewer crashes, safer working conditions, and fewer motorist complaints.
- Motorist acceptance might reduce aggressive driving behavior.

The region's public information officer can provide assistance in this effort.

810.04 Work Zone Classification

The duration of work is a major factor in determining the number and types of devices used in traffic control work zones. There are five classes of zones categorized by the expected duration of work. Different criteria apply to the design and planning for each of these. Several work zone classifications might be present during the construction phase of a project. The following are the five classes of work zones.

(1) Long-Term Stationary Work Zones

Long-term stationary work zones occupy locations longer than 3 days. At these locations there is ample time to install and realize benefits from the full range of traffic control procedures and devices that are available for use. Generally, larger channelizing devices are used, as they have more retroreflective material and offer increased nighttime visibility. The larger devices are also less likely to be displaced or tipped over by passing traffic. This can be an important consideration during those periods when the work crew is not present. Since long-term operations extend into nighttime, retroreflective and illuminated devices are necessary. Temporary detours and barriers can be provided, and inappropriate pavement markings can be removed and replaced with temporary markings. The time required for the installation and removal of temporary barriers and pavement markings is justifiable when they are required for about a week.

(2) Intermediate-Term Stationary Work Zones

Intermediate-term stationary work zones occupy a location from overnight to 3 days. At these locations it might not be feasible or practical to use procedures or devices used for long-term stationary temporary traffic control zones. The increased time required to place and remove these devices might significantly lengthen the project, thus increasing the workers exposure time. The region's traffic office is a valuable resource to assist in making this decision.

(3) Short-Term Stationary Work Zones

Short-term stationary work zones are locations where the work will be accomplished during daylight hours and the activity can be accomplished in 12 hours or less. Most maintenance and utility operations use short-term stationary work zones. They are also used for minor construction activities on projects. The work crew is present to maintain and monitor the temporary traffic control devices. The use of flaggers to control traffic is sometimes necessary. Lighting and retroreflective devices are used when seasonal and climatic conditions limit visibility.

(4) Short-Duration Work Zones

Short-duration work zones occupy a location for up to one hour. During short-duration work, the work crew sets up and takes down the traffic control devices. Because the work time is short, the impact to motorists is usually not significant and simplified traffic control procedures are used. These simplified control procedures can often be standardized plans as contained in the Standard Plans and the *Work Zone Traffic Control Guidelines*.

(5) Mobile Work Zones

Mobile work zones are work activities that progress along the road either intermittently or continuously. Mobile operations often involve frequent stops for activities such as litter cleanup, pothole patching, or utility operations and are similar to short duration work zones. Warning signs, flashing vehicle lights, flags, and channelizing devices are used. When the operation moves along the road at low speeds without stopping, the advance warning devices are often attached to mobile units and move with the operation. Flaggers are exposed to more extreme hazards in these operations and safeguards are necessary. Electronic signs and flashing arrow displays are far more effective

than flaggers in these situations. Pavement milling and paving activities are to some extent mobile operations in that they can progress along a roadway several miles in a day. These operations, however, are not considered mobile work zones.

810.05 Work Zone Types

The work zone type is the basic layout of the work site and the configuration of traffic lanes. There are ten basic work zone types. See Figures 810-1a through 810-1c. Work sites that are located completely off the roadway and do not disrupt traffic are not included. A description of each of the ten types is as follows:

(1) Lane Constriction

The lanes in this work zone type retain their normal number and general alignment. One or more of the traffic lanes have reduced widths to provide the necessary separation from the work zone. This arrangement causes the least disruption to traffic.

(2) Lane Closure

One or more of the traffic lanes are closed in this work zone type. A capacity analysis is necessary to determine the extent of congestion that might result.

(3) Shared Right of Way

This work zone type involves using one lane for both directions of traffic. Flaggers or traffic signals are normally used to control the alternation of traffic movements.

(4) Temporary Bypass

This work zone type involves total closure of one or both directions of travel on the roadway. Traffic is routed to a temporary bypass constructed within the highway's right of way.

(5) Intermittent Closure

This work zone type involves stopping all traffic in both directions for a relatively short time to allow the work to proceed. After a certain amount of time, driven by the traffic volume, the roadway is reopened.

(6) Crossover

This work zone type involves routing the traffic from one direction onto a portion of the median and roadway of the opposing traffic. It can also incorporate lane width constrictions to maintain the same number of lanes. On higher speed roadways, a portable or temporary barrier is used to separate the two directions of traffic.

(7) Shoulder Use

The traffic lanes are routed onto the shoulder in this work zone type. The structural capacity of the shoulder must first be analyzed to determine its ability to carry the proposed traffic.

(8) Median Use

This work zone type is similar to the shoulder use type and is used on divided highways where the median and adjacent shoulders are used for the traffic lanes. Barriers are usually necessary to separate opposing traffic.

(9) Detour

This work zone type involves total closure of the roadway. Traffic is rerouted to an adjacent street or highway.

(10) Multiple Lane Separation

In this work zone type the traffic lanes in one direction are separated to allow construction activities within one of the lanes. On higher speed roadways, temporary barriers are provided to prevent errant vehicles from entering the work area.

810.06 Project Definition

Large projects are more successful in managing traffic and providing adequate safety when there is early and ongoing communication between the designer and the construction Project Engineer, who will be responsible for the administration of the contract. Agreement is necessary to ensure that the traffic control plans and specifications will be effective and enforceable. In addition, a meeting (attended by the region's Traffic Engineer, law enforcement officials, a construction project engineer, and representatives from local agencies affected by the planned project) is held early in the design

definition phase to discuss construction work zone traffic control strategy options and to select the most feasible approach. Additional traffic control strategy meetings, depending on the size and complexity of the project, are held as more specific design information becomes available.

The options developed for the work zone traffic control strategy define the level of safety provided for motorists, pedestrians, and workers, and predict the acceptable level of service to be maintained for traffic. The objectives of this strategy include the following:

- The safety of motorists and pedestrians traveling through work zones.
- Protection of highway workers from hazards associated with moving traffic.
- Minimize travel delays associated with the work activities.
- Facilitate access to abutting properties and minimize disruption and loss of revenue to adjoining businesses.
- Address issues that might interfere with the contractor's ability to accomplish the work within the specified working days of the contract.

(1) Time Restrictions

The traffic volumes on a highway or street vary greatly both during the day and the week. Generally on weekdays maximum traffic flows (peak hour volumes) occur twice a day, in the morning and in the early evening. Additionally, these traffic flows tend to be unidirectional. In the morning the predominate traffic flow is to a major destination and in the evening the flow is reversed. Construction activities on the portion of the roadway not being used by the peak traffic flow will cause less disruption. After these peak traffic periods, volumes decrease significantly and construction activities during these periods will have less impact on the highway users. During the late evening, traffic volumes drop to extremely low levels. Construction activities during these time periods have minor impacts on the traffic flow, but require additional safety considerations because of reduced visibility and diminished motorist skills during the hours of darkness.

As noted above, construction in work zones can have a negative impact on peak hour traffic demands. It is sometimes necessary to curtail work at certain times during the day and open closed traffic lanes to reduce traffic delays. These periods are referred to as the hours of restriction in the contract and are the hours when all existing lanes are open to traffic. The maximum capacity a traffic lane in construction work zones tends to be lower than that used in normal capacity analysis. This is due in part to the number of visual distractions and to the narrow lanes within the work zone.

Traffic lanes in work zones reach saturation before the traffic volume approaches the theoretical maximum lane capacity of a free-flowing facility. See the *Highway Capacity Manual* and *Planning and Scheduling Work Zone Traffic Control* guidebook for applicable lane volumes and other factors. Several elements, including, lane restrictions, adjacent channelization devices, excessive signing, and distractions along on the roadside, contribute to lower lane capacity in work zones. When the traffic volume exceeds the capacity of the facility, operating speeds start dropping quickly. This slowing at the front of the traffic platoon is then amplified back through the following traffic and severe braking and stopping occurs. Once the traffic flow reaches this "forced flow" condition, traffic backups will occur and normal free flow conditions will not return until well after the usual peak hour condition. When specifying the time restrictions in the contract, consider beginning the restriction before the actual peak hour volume condition occurs.

Certain holidays, particularly those that extend beyond the normal weekend, and special events can generate abnormally high traffic volumes. Restrictions are needed on construction activities that might restrict or reduce the highway's capacity during these times.

When determining the hours of restriction, check the local agency noise ordinances and determine what construction work can be done at night. Construction activities that cause excessive noise, such as pile driving, are usually prohibited at night in urban areas. Also, older types of

changeable message signs and arrow panels use noisy engine-powered generators. Limitations on noise levels are also included in the contract documents.

Time restrictions can also affect the time required to complete the project. The total working days specified in the contract must address the possible reduction in productivity caused by the time restrictions imposed on the contractor. When considering time restrictions, estimate the time required to set up and take down the traffic control devices and the time needed by the contractor to bring the construction equipment and materials into the work area. If this total time coupled with the proposed time restrictions does not provide a normal eight to ten hour work shift, productivity will drop and contract costs will escalate.

Excessive disincentives (referred to as liquidated damages in the Standard Specifications) can be included in the contract to encourage the contractor to complete the work within a specified time. When contracts specify unusually short time periods to complete the work or impose numerous time restrictions when work cannot be accomplished, contractors must increase their work force significantly, use abbreviated work shifts, and pay premium wages for work preformed during nontypical work periods. This usually results in disproportionately higher contract bids and during construction can lead to claims against the contract and even litigation to resolve disputes. It might also produce a strained or hostile relationship between the contractor and Project Engineer.

Incentives, in the form of additional monetary compensation, coupled with provisions that allow the contractor latitude in proposing innovative ways of accomplishing the work, are sometimes more effective. Total contract costs can often be less when incentives rather than disincentives are used. Incentives are usually only used when a high level of productivity is required from the contractor to complete the contract or a portion of the contract as soon as possible to reduce road use costs and delays. Incentives are also used when a critical element of the work has significant public concern or political interest. The failure to complete these critical work elements on time can also have an undesirable negative effect and disincentives are included with incentives to emphasis the importance of the work.

Total road user costs are generated during the traffic analysis in the design stage of a project and can be the basis for determining disincentives or incentives in a contract.

(2) Road Closures

Closing a highway, street, or ramp, while not always practical, is a desirable option from a safety viewpoint. For the traveling public, closing the road for a short time might be less of an inconvenience than driving through a work zone for an extended period of time. The time necessary for construction is also reduced and work zone safety is significantly improved. Road closures usually minimize the on-site work zone traffic control, which in turn reduces the construction costs. Road closures can add to the cost of the project because off-site traffic control is needed to provide signing and improvements to detour routes, advanced motorist information signing, and media announcements.

Consider a roadway closure if an alternate route is available. The alternate route must have a sufficient lane capacity to carry the additional traffic volumes and the structural capacity of the pavement must be capable of withstanding the impact of heavier vehicles. Also, determine if there are any vertical clearance restrictions that will prevent trucks from using the route. See Chapter 1120 for vertical clearance requirements. A written agreement with the local agency is usually necessary to route additional traffic on to their roadways. A road closure might isolate private residences or deny access to businesses fronting the highway. State law prohibits “land-locking” property owners. If an alternate and reasonably direct access route is not available for these people, the road closure cannot be considered.

If a road closure is feasible, take the following actions:

- Obtain local agency approval to use a local roadway as a detour.

- Meet with the community and businesses to discuss the roadway closure and find ways to mitigate the community's concerns.
- Determine the maximum number of days allowed for the closure and incorporate this into the contract documents.
- Determine if liquidated damages or incentives for early completion will be necessary to ensure completion of the work within the time required.
- Determine if additional traffic control measures are needed at intersections on the detour route.
- Consider jobsite access for the contractor's workers and equipment.
- Contact emergency services, schools, transit, and civic organizations.
- Develop a method for conveying notification of the planned road closure to the public. Extensive multimedia approaches are necessary for the closures of major highways.

(3) Predicting Delay and Cost

In the work areas of long-term major projects, traffic delays, the possibility of crashes, and other factors contribute to the overall costs of a project. These costs, called user costs, are indirect, being societal, but are considered when proposing work zone traffic control options. These costs involve the following:

- Crashes and the resulting property damage, injuries, and possible fatalities.
- Vehicle delays and loss incurred by the motorist.
- Vehicle operation and fuel consumption.
- Business revenue losses.

Methods of predicting delay and costs are contained in the guidebook, *Planning and Scheduling Work Zone Traffic Control*. The Headquarter's Transportation Data Office can assist in providing factors for various societal costs. Options that provide the least cost to the public are then weighed against the project costs for providing traffic control. Restrictions on high volume highways for extended periods of time can result in extraordinarily higher user costs and might favor a road closure to reduce project costs.

810.07 Work Zone Safety

Effective work zone traffic control strategy encompasses the safety of all users and is not limited to providing clear guidance and warning to the motorist. Work areas present constantly changing roadway conditions that might be unexpected by the motorist and the likelihood of confusing some drivers is increased. The possibility of errant vehicle crashes creates a high degree of vulnerability for workers, flaggers, pedestrians, and bicyclists in the work zone.

(1) Workers

Working on or along the highway on construction projects is one of the more hazardous work environments in the state. The risk of being struck by a vehicle traveling through the work zone increases as traffic volumes and speeds increase. Long delays can cause some motorists to become impatient and act unpredictably. Consider the risk to workers when developing the traffic control plans for long-term stationary work zones.

Traffic barriers provide the most effective protection for workers and eliminate the need for flaggers and many traffic control devices. The costs of furnishing and removing temporary traffic barriers on longer duration projects can often be less than the cost associated with the frequent repositioning of other traffic control devices. Intrusion warning devices, used to alert workers to an errant vehicle that has intruded into the work zone, are ineffective on high-speed roadways because the worker has little time to react to the warning. Also, construction and traffic noise can mask the sound emitted from these devices.

(2) Flaggers

In a general sense, flaggers are also workers. Their function in the work zone, however, is uniquely different than other workers and they are treated as a separate group. Flaggers must perform their duties in extremely high-risk situations. Flaggers are not included in traffic control strategies until all other reasonable means of traffic control have

been considered. More innovative traffic control methods such as temporary traffic signals, detour routes, and alternative traffic control plans can eliminate the need for flaggers.

Flaggers are normally used to stop traffic for short duration work activities such as intermittent lane closures. They can also be used to watch traffic and alert workers of the approach of an errant vehicle. Using flaggers solely to instruct motorists to proceed slowly is ineffective and is an unacceptable practice. When flaggers are used, provide a method of alerting flaggers to the hazard of a vehicle approaching from behind. When flagging is needed for nighttime construction activities, provide adequate illumination of the flagger's station. Shortwave radios or cellular phones might be necessary to allow flaggers to communicate with one another when they are required to control traffic movements in shared right of way work zones.

(3) Road Users

Road users, rightfully, assume they have full use of the roadway unless directed otherwise. The message conveyed to the user through signing, markings, and devices must be consistent and credible.

(a) **Motorist.** Effective planning and design of work area traffic control zones begins with the motorist. If motorists can easily understand the traffic control and have adequate time to react or make rational decisions, they will operate their vehicles in a safer manner. It is essential that designs be based upon the characteristics and limitations of drivers who use the highway and street networks. As speeds increase on a facility, the motorist requires more time to respond to conditions. Perceived insufficient or conflicting information and too much information conveyed by signing will confuse the motorist and contribute to erratic driving behavior. Credibility might be damaged if signing and other devices warn the motorist of a condition that no longer exists.

(b) **Pedestrians.** Public highways and streets cannot deny access to pedestrians if no other route is available to them. Even in work zones, adequate facilities are provided to allow pedestrians to travel through or around the work zone. In urban areas and other locations where pedestrian travel is pronounced, the construction of temporary pathways that route the pedestrian around the work zone may be necessary. Covered walkways are provided in the work zone when there is a potential for falling objects to strike pedestrians. All pedestrian facilities within the work zone must comply with ADA requirements for barrier-free access. See Chapter 1025 for pedestrian design requirements.

(c) **Bicyclists**. Bicyclists are allowed on most highways and streets and many use the bike as their principal means of transportation. In work areas where the speeds are in the range of 25 to 30 mph, the bicyclist can use the same route as motorized vehicles. On higher speed facilities the bicyclist will not be able to match the speed of these motorized vehicles and a different route or detour is sometimes necessary for safety and to reduce vehicular delays. When this is not possible, the bicyclists can be instructed to dismount and walk their bikes through the work zone on the route provided for pedestrians.

Riding surfaces are important for safe bicycle operation. Loose gravel, uneven surfaces, milled pavement, and various asphaltic tack coats endanger the bicyclist. Consider the condition of the surface the bicyclist will be required to use. See Chapter 1020 for more bicycle design requirements.

(d) **Motorcycles.** The riding surface is also important for motorcycle rider safety. The same surfaces that are a problem for bicyclists are also difficult for motorcyclists. Stability at high speed is a far greater concern for motorcycles than cars on grooved pavement, milled asphalt and tapers from existing pavement down to milled surfaces. Contractors must provide adequate warning signing for these conditions to alert the motorcycle rider.

(e) **Oversized vehicles.** Oversized vehicles exceed the legal width, height, or weight limits for vehicles, but are allowed on certain state highways. The regions' maintenance offices issue permits that allow these oversized vehicles to use these routes. If the proposed work zone will not accommodate these vehicles, provide adequate warning signs and notify the region's

maintenance offices that issue these permits. In this notification, identify the type of restriction (height, weight, or width) and specify the maximum size that can be accommodated. On some projects, it may be necessary to designate a detour route for these oversized vehicles.

810.08 Regulatory Traffic Control Strategies

On highways with high posted speeds and aggressive drivers, traffic control measures can be difficult to enforce without the presence of police. Aggressive driver behavior is common in large metropolitan areas where commuters are a major component of the traffic. In these areas, consider strategies that rely on regulatory signing with law enforcement. The messages conveyed on regulatory signs, as shown in the MUTCD, can be enforced and citations can be issued by law enforcement agencies for infractions. Many signs within a work zone, however, are warning signs and compliance is a desired action and not a requirement. Even the advisory speed plaques installed under warning signs cannot be enforced.

(1) Enhanced Enforcement

Enhanced enforcement is the term used for stationing law enforcement personnel in the work zone. Their presence at the job site is to ensure compliance with motor vehicle laws and to moderate aggressive driver behavior. In general, work zones operate effectively if the correct strategy is implemented and law enforcement personnel are not necessary. Enhanced enforcement is only used when all other forms of traffic control can be shown to be ineffective in performance or excessive in cost.

When considering the use of enhanced enforcement, the initial determination is based on the designer's engineering judgment and the consensus of the region's maintenance, construction, traffic offices, and law enforcement input. Consider the following factors before proposing enhanced enforcement:

- The type of construction activity
- The complexity of the traffic control plans
- The possible need for a speed reduction
- Traffic volumes
- Excessively high speeds
- Abnormally high crash rates
- High frequency of DWI citations
- Nighttime work activities
- Geometric conditions
- Past history of traffic problems in similar areas

(2) Speed Reduction

The speed limits on state highways are set by the State Traffic Engineer and cannot be changed without approval. The speed limit for a facility is usually determined by conducting a speed survey and using the highest speed that 85 percent of the traffic drives.

Motorists tend to drive at a speed that seems appropriate for the conditions. Imposing an artificially low speed limit is rarely effective and even a speed reduction of 10 mph will have a very low compliance rate.

However, speed reductions can decrease crashes and work zone intrusions on high-speed multilane facilities when enhanced enforcement is present and the speed limit can be lowered temporarily during construction. Proposals to reduce the speed limit in these conditions are forwarded to the region's traffic office for consideration. Speed reduction guidelines are outlined in RCW 47.38.020, the *Construction Manual*, and Directive D 55-20, "Reduced Speed in Maintenance and Construction Zones."

The implementation of reduced speed zones is only considered when all other forms of traffic control are not effective in warning the motorist of conditions that require a slower operating speed. Examples of these conditions are:

- Reduced stopping sight distance
- Proximity to traffic barriers
- Severe roadway geometrics
- Extremely narrow lanes

810.09 Traffic Control Plans and Devices

The traffic control plans shown in the MUTCD and the Standard Plans provide the guidelines for individual situations. Most real-world locations have a combination of several situations and other geometric factors that require further augmentation of the traffic control. Traffic control devices are signs, traffic control signals, pavement markings, and other devices placed on or adjacent to a street or highway to regulate, warn, or guide traffic.

(1) Traffic Control Plans

Work zone traffic control plans are prepared for specific construction activities, such as lane reductions, closures, temporary bypasses, and the like, so the contractor has as much freedom as possible in scheduling the work. A specified construction sequence is not desirable because it might favor one contractor's methods of construction and might create an unacceptable bidding climate. All traffic control plans are site-specific in that the alignment of the roadway, lane configuration, intersection locations, and all other physical details peculiar to the project are shown. The traffic control plans shown in the Standard Plans cannot be used in WSDOT administered contracts. Contract specifications are used to identify when construction activities must be curtailed to maintain traffic flow.

The preparation of these plans and specifications requires the designer to not only have a thorough knowledge of highway construction activities but also an understanding of the unique traffic flow patterns within the specific project. The designer must be cognizant of the dynamic nature of construction activities and provide a constructible traffic control plan that will also safely and efficiently manage traffic. In addition, the users of the facility have little or no understanding of the construction occurring in the work zone and require far greater guidance than the contractor's or agency's people, who are familiar with the project. Traffic control plans are always designed from the perspective of motorists, pedestrians, and bicyclists' to provide the necessary information so they can proceed in a safe and orderly manner through a work zone. Unexpected roadway conditions, changes in alignment, and temporary roadside obstacles relating to the work activity need to be defined adequately to minimize the user's uncertainty.

(2) Physical Barriers

Physical barriers are used to both separate opposing traffic movements and separate the road users from the work zone. They are appropriate when errant vehicle intrusions into the work area are not acceptable. Unacceptable intrusions are those that can jeopardize the safety of the motorist or the workers. Three types of barrier protection are used in construction work zones. These are water-filled barriers, moveable barriers, and temporary concrete barriers.

Physical barriers are normally installed at the following locations:

- The separation of opposing traffic where two-way traffic must be maintained on one roadway of a normally divided highway for an extended period of time.
- The separation of opposing traffic where a four-lane divided highway transitions to a two-lane, two-way roadway that is being upgraded to become a divided four-lane roadway.
- Where drums, cones, barricades, or vertical panels do not provide adequate guidance for the motorist or protection for the worker.
- A multiple lane separation in a long term stationary work zone.
- Where workers are exposed to unusually hazardous traffic conditions.
- Where existing traffic barriers and bridge railings are removed during a construction phase.

(a) **Water-filled barriers** are longitudinal barrier systems that use lightweight modules pinned together and filled with water. They may be used as an improvement over traffic cones and drums to channelize traffic through a work zone. They are most frequently used in short-term work zones because of the relative ease and rapidity of installation and removal. Two different water filled barrier systems (Triton and Guardian) have

been crash tested with the test vehicle striking the system at a 25 degree angle at 45 mph and 60 mph. The barriers deflected up to 13 ft at 45 mph and 23 ft at 60 mph. At lesser speeds and angles this deflection will be less. However, with this amount of deflection, water-filled barrier will generally not be practical when large deflections or penetration of the barrier system is undesirable. Therefore, they cannot be considered as a substitute for concrete barrier.

The minimum length of water-filled barrier is 100 ft. At a 45 mph impact, the leading 30 ft of the barrier does not contribute to the length of need. For 60 mph, the beginning 60 ft does not contribute to the length of need. One of the water-filled systems, the Triton Barrier, can act as its own end treatment if the end module is left empty and the retaining pin is left out of the exposed end. The other system, the Guardian, requires a crashworthy end treatment or a TMA on the approach end.

(b) **Moveable barriers** are specially designed segmental barriers that can be moved laterally as a unit to close or open a traffic lane. Initial costs are high and it will only be considered in a long-term stationary work zone if frequent or daily relocation of a barrier is required. The ends of the barrier are not crashworthy and must be located out of the clear zone or fitted with an impact attenuator. Adequate storage sites at both ends of the barrier are required for the unique barrier-moving machine.

(c) **Temporary concrete barriers** are the safety-shape barriers shown in the Standard Plans. They are used in long-term stationary work zones on high-speed, multilane facilities. They are also used as a temporary bridge rail when existing bridges are being modified. These concrete barriers are often displaced in impacts with errant vehicles. Lateral displacement is usually in the range of two to four feet. When any barrier displacement is unacceptable, these barriers are anchored to the roadway or bridge deck. Anchoring systems are also shown in the Standard Plans.

The approach ends of temporary concrete barriers are fitted with impact attenuators to reduce the potential for occupant injury during a vehicle collision with the barrier. Examples of impact attenuators are shown in Chapter 720.

(3) Truck Mounted Attenuators

A truck mounted attenuator (TMA) is a portable impact attenuator attached to the rear of a large truck. Ballast is added to the truck to minimize the roll-ahead distance when impacted by a vehicle. The TMA is used as a shield to prevent errant vehicles from entering the work zone. They are most frequently used in short-term or mobile work zones.

(4) Fixed Signing

Fixed signing are the signs mounted on conventional sign supports along or over the roadway. This signing is used for long-term stationary work zones. Ground-mounted sign supports are usually wood and details for their design are in Chapter 820. Sign messages, color, configuration, and usage are shown in Part VI of the MUTCD. Sign mounting height and lateral placement requirements are somewhat different than those for permanent signing. These requirements are shown in Figures 810-2a and 2b. When preparing the work zone signing plan, review all existing signing in advance of and within the work zone for consistency. Cover or remove existing signs that can be misinterpreted or be inappropriate during construction.

(5) Portable and Temporary Signing

Portable and temporary signing is generally used in short term or mobile work zones where frequent repositioning of the signs is necessary to keep pace with the work along the highway. These signs are mounted on collapsible sign supports or vehicles. Portable changeable message signs (PCMS) and arrow board displays have electronic displays that can be modified. These signs are usually mounted on trailers and use batteries or a generator to energize the electronic displays.

Place the PCMS far enough in advance of the roadway condition to allow the approaching driver adequate time to see and read the sign's message twice. The following are some typical situations where PCMS are used:

- Where speed of traffic is expected to drop substantially.
- Where significant queuing and delays are expected.
- Where adverse environmental conditions, such as ice and snow, are present.
- Where there are extreme changes in alignment or surface conditions.
- Where advance notice of ramp, lane, or roadway closures is necessary.
- When accident or incident management teams are used.

The arrow board displays either an arrow or a chevron pointing in the direction of the intended route of travel. Arrow board displays are used for lane closures in multilane roadways. When closing more than one lane, use an arrow board display for each lane reduction. Place the arrow board at the beginning of the transition taper and out of the traveled way. The caution display (four corner lights) is only used for shoulder work. Arrow boards are not used on two-lane two-way roadways.

(6) Channelization Devices

Channelization devices are used to alert and guide the motorist through the work zone. They are a supplement to signing, pavement markings, and other work zone devices. Cones, tubular markers, and drums are shown in Figure 810-3. Barricade types are shown in Figure 810-4.

(a) **Cones.** Cones are either orange, fluorescent red-orange, or fluorescent yellow-orange in color and are constructed of a material that will not cause injury to the occupants of a vehicles when impacted. Eighteen-inch high cones can be used in the daytime on lower speed roadways. For nighttime operations and high speed roadways, reflectorized 28” high cones are necessary. Traffic cones are used to channelize traffic, divide opposing traffic lanes, and delineate short-term duration work zones.

(b) **Tubular Markers.** Tubular markers are fluorescent orange in color and are constructed of a material that will not cause injury on impact. They are available in heights from 18 inches to 4 feet. The taller marker is used on freeways and other high-speed highways or anyplace where more conspicuous guidance is needed. However, these taller markers, when placed near the edge of a traveled lane, can reduce the capacity of a traffic lane. The motorist will perceive the marker as a hazard and will either decelerate or attempt to move away from the marker to avoid contact. When the carrying capacity is critical, provide as much lateral clearance as possible to eliminate this problem. The shorter marker is less imposing in appearance and provides acceptable delineation.

(c) **Drums.** Drums are fluorescent orange in color, constructed of lightweight, flexible materials and are a minimum of 3 feet in height and 18 inches in diameter. Drums are the more commonly used devices to channelize or delineate traffic routes. They are highly visible and appear to be formidable obstacles. Drums are used at locations where high vehicular speeds are present because they have weighted bases and are less likely to be displaced by the wind generated by moving traffic.

(d) **Barricades.** The barricades used in work zone applications are portable devices. They are used to control traffic by closing, restricting, or delineating all or a portion of the roadway. There are four barricade types.

- The Type I Barricade is used on lower speed roads and streets to mark a specific hazard or channelize traffic.
- The Type II Barricade is used on higher speed roadways and has more reflective area for nighttime use.
- The Type III Barricades are used for lane and road closures.
- The Direction Indicator Barricade is used to define the route of travel on low speed streets or in urban areas where tight turns are required. In lane reductions, the directional arrow on this barrier can be used in the transition taper to indicate the direction of the merge.

(7) Illumination

Illumination might be justified if construction activities take place on the roadway at night for an extended period of time. Illumination might also be justified for long term construction projects at the following locations:

- Road closures with detours
- Road closures with diversions
- Median crossovers on freeways
- Complex or unexpected alignment or channelization
- Haul road crossings (if operational at night)
- Temporary traffic signals
- Temporary ramp connections
- Disruption of an existing illumination system

See Chapter 840 for light level and other electrical design requirements. When flaggers are necessary for nighttime construction activities, always illuminate the flagger stations.

(8) Delineation

Pavement markings provide motorists with clear guidance of the path through the work zone and are necessary in all long-term work zones. Temporary pavement markings can be either painted, thermoplastic tape, or raised pavement markers. Remove existing confusing or contradictory pavement markings.

Other delineation devices are guideposts, concrete barrier delineators, and lateral clearance markers. These devices have retroreflective properties and are used as a supplement in delineating the traveled way during the nighttime. See Chapter 830 for guidepost delineation requirements. Lateral clearance markers are used at the angle points of barriers where they encroach on or otherwise restrict the adjacent shoulder. Concrete barrier delineation is necessary when the barrier is less than four feet from the edge of the traveled way. This delineation can be either barrier reflectors attached to the face of the barrier or saddle drum delineators that sit on the barrier. Figure 810-5 shows examples of both types of barrier delineators.

(9) Screening

Screening is used to block the motorist's view of construction activities adjacent to the roadway. Construction activities can be a distraction and motorist's reaction might cause unsafe vehicle operation and undesirable speed reductions. Consider screening the work area when the traffic volume approaches the roadway's capacity. Screening can be either vertically supported plywood panels or chain link fencing with vertical slats. These types of screening are positioned behind traffic barriers to prevent impacts by errant vehicles. The screening is anchored or braced to resist overturning when buffeted by wind.

Another type of screening, glare screening, is also used on concrete barriers separating two-way traffic to reduce headlight glare from oncoming traffic. Vertical blade type screens are commonly used in this installation. This screening also reduces the potential for motorist confusion at nighttime by shielding the headlights of other vehicles on adjacent roadways or construction equipment. Make sure the motorist' sight distance to critical roadway features is not impaired by these glare screens.

(10) Portable Traffic Signals

Portable traffic signals are conventional traffic signals used in work zones to control traffic. They are typically used on two-way, two-lane highways where one lane is closed and alternating traffic movements are necessary. They can also be used as a substitute for flaggers to stop traffic. See Chapter 850.

810.10 Documentation

A list of documents that are to be preserved [in the Design Documentation Package (DDP) or the Project File (PF)] is on the following website: http://www.wsdot.wa.gov/eesc/design/projectdev

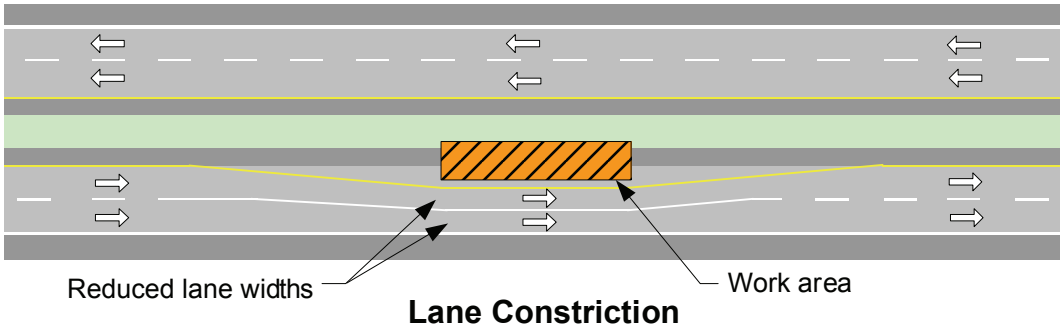

Lane Constriction

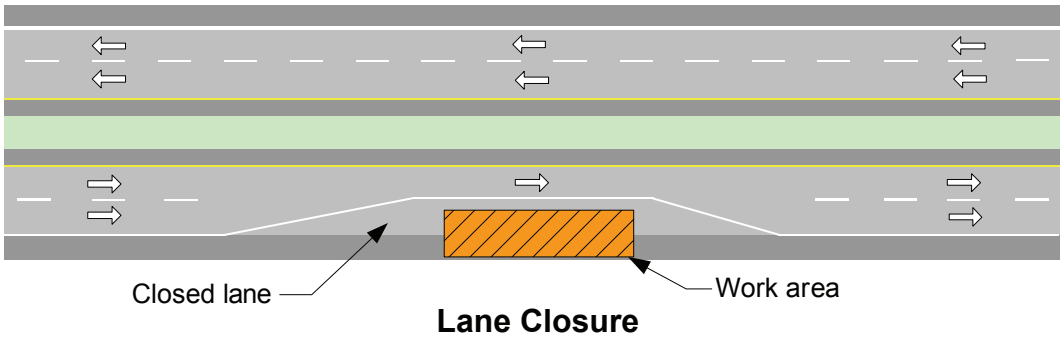

Lane Closure

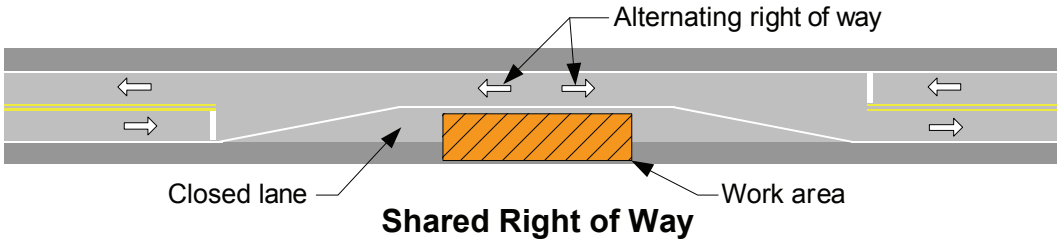

Shared Right of Way

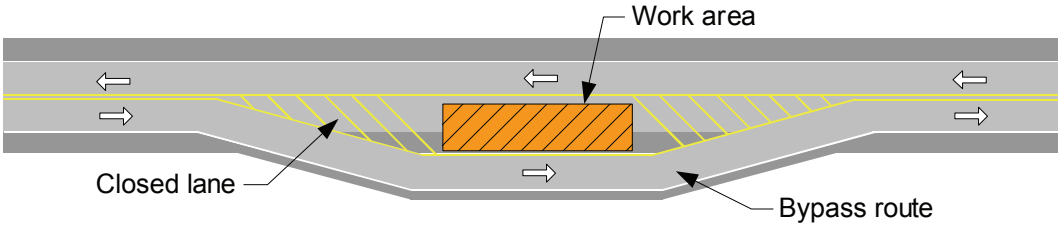

Temporary Bypass

Work Zone Types
Figure 810-1a

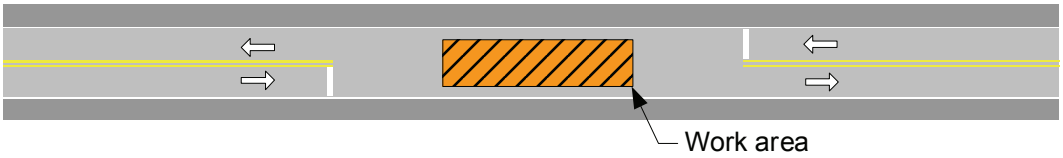

Intermittent Closure

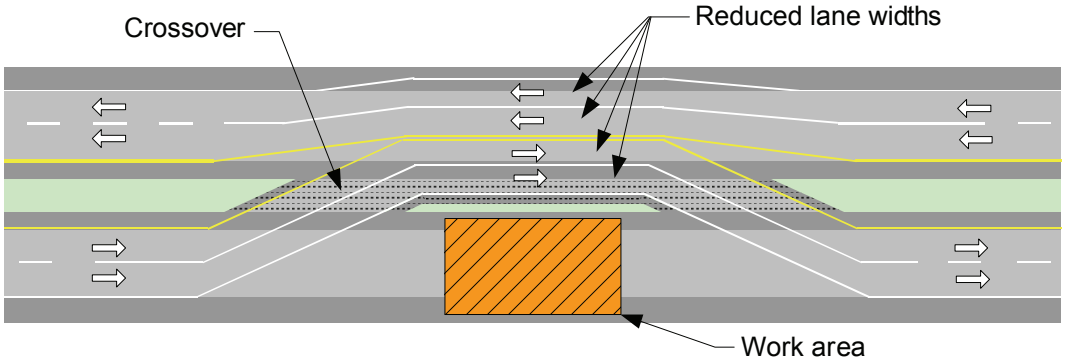

Crossover (with lane constrictions)

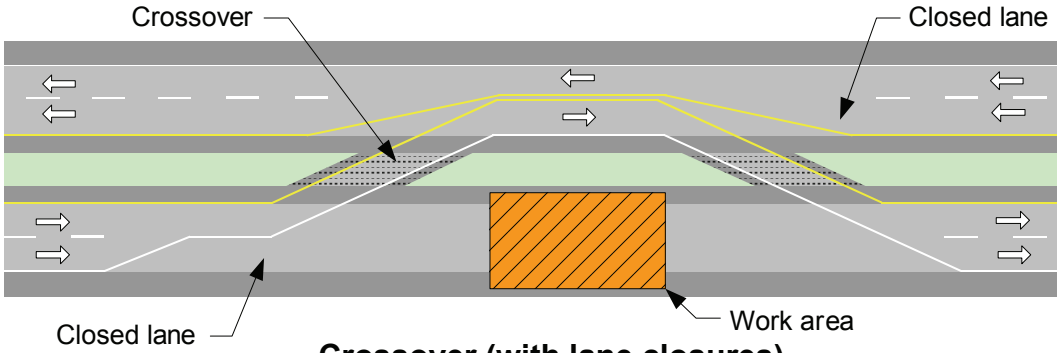

Crossover (with lane closures)

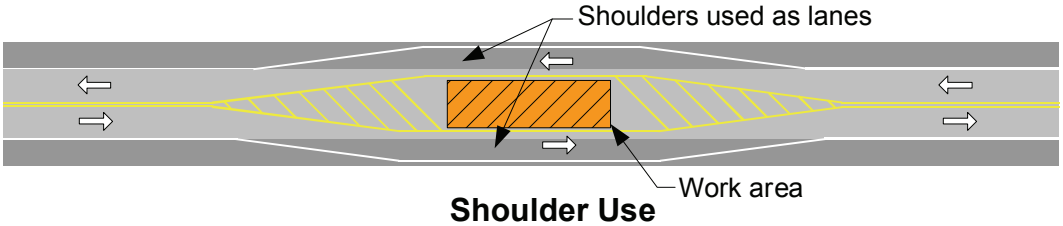

Shoulder Use

Work Zone Types
Figure 810-1b

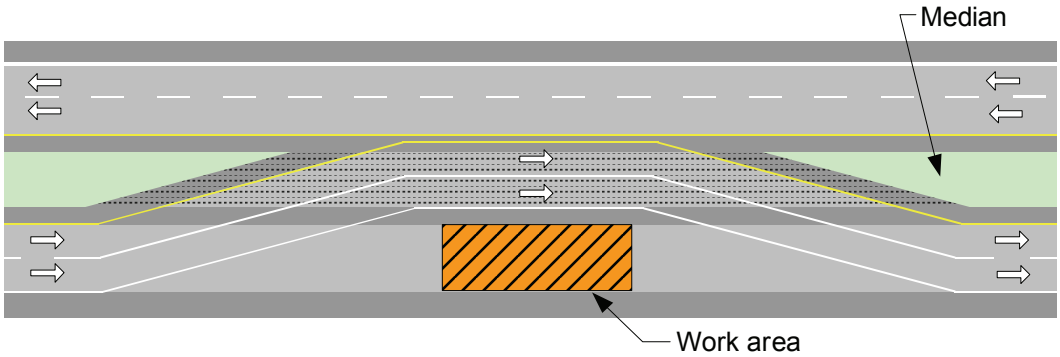

Median Use

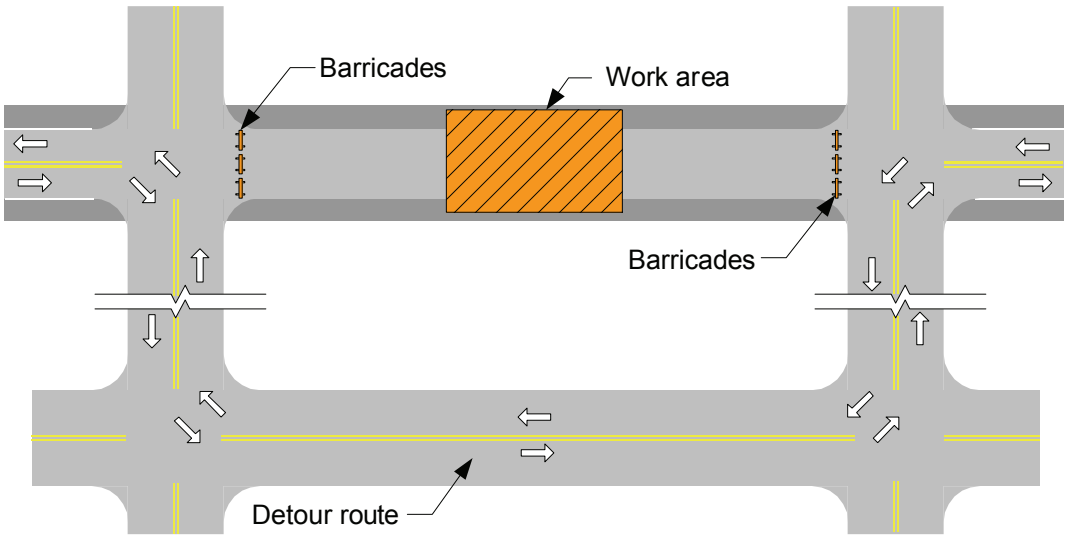

Detour

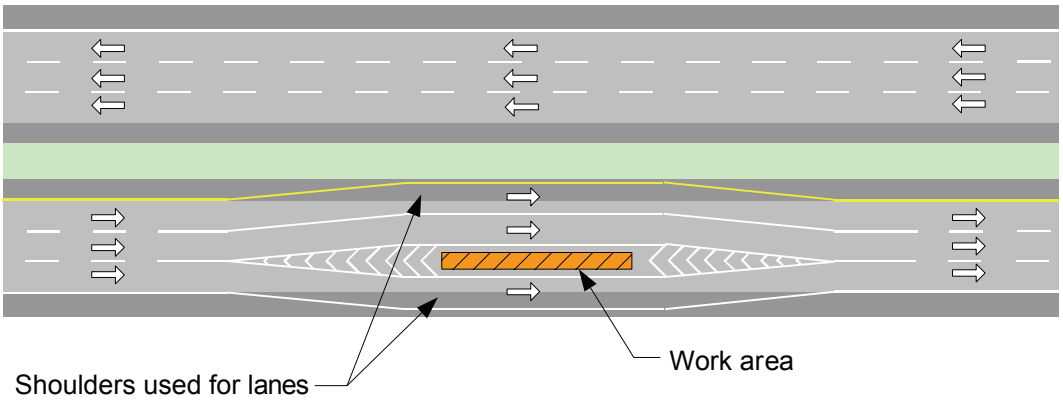

Multiple Lane Separation

Work Zone Types
Figure 810-1c

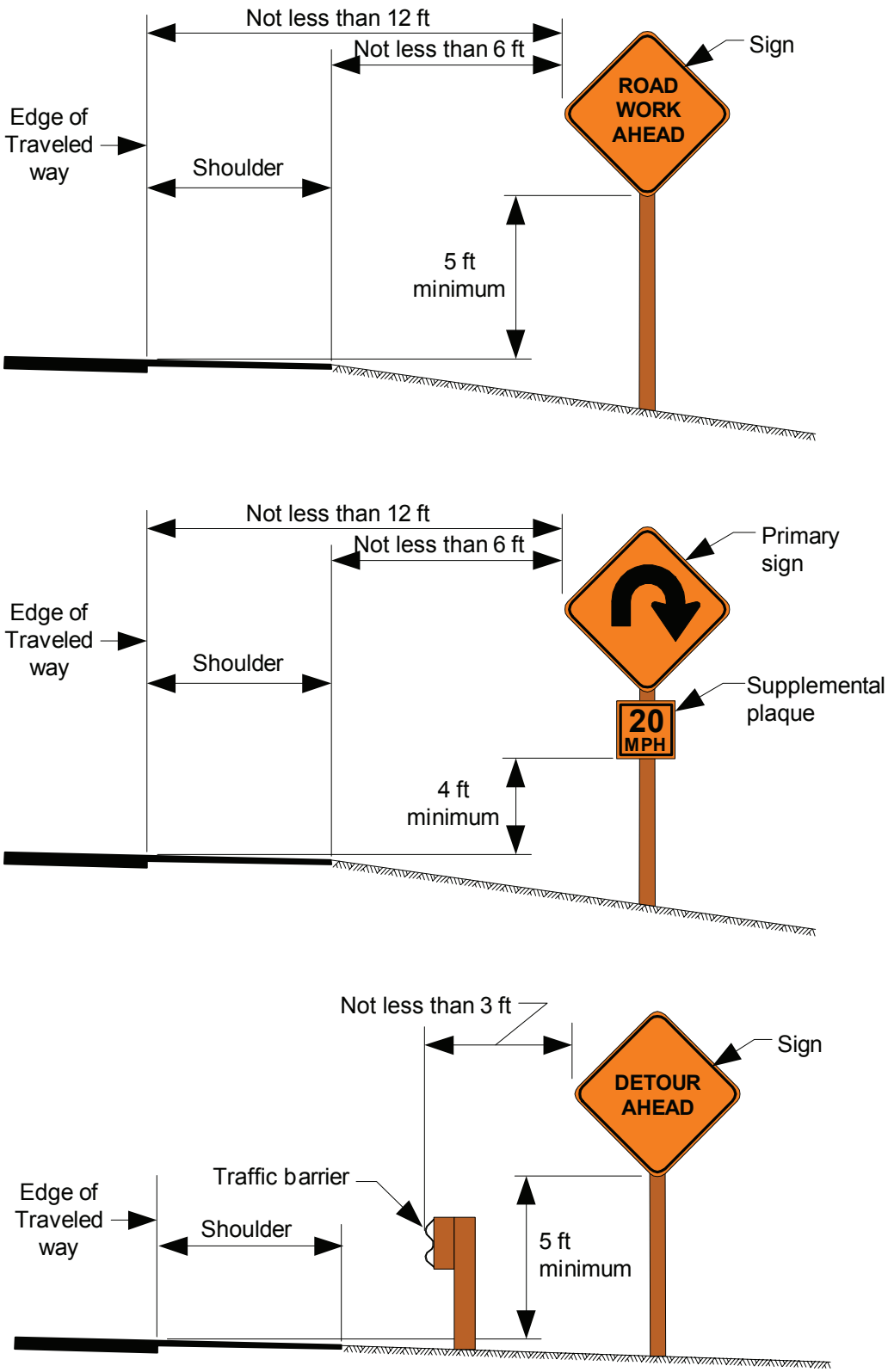

Sign Placement — Rural Areas
Figure 810-2a

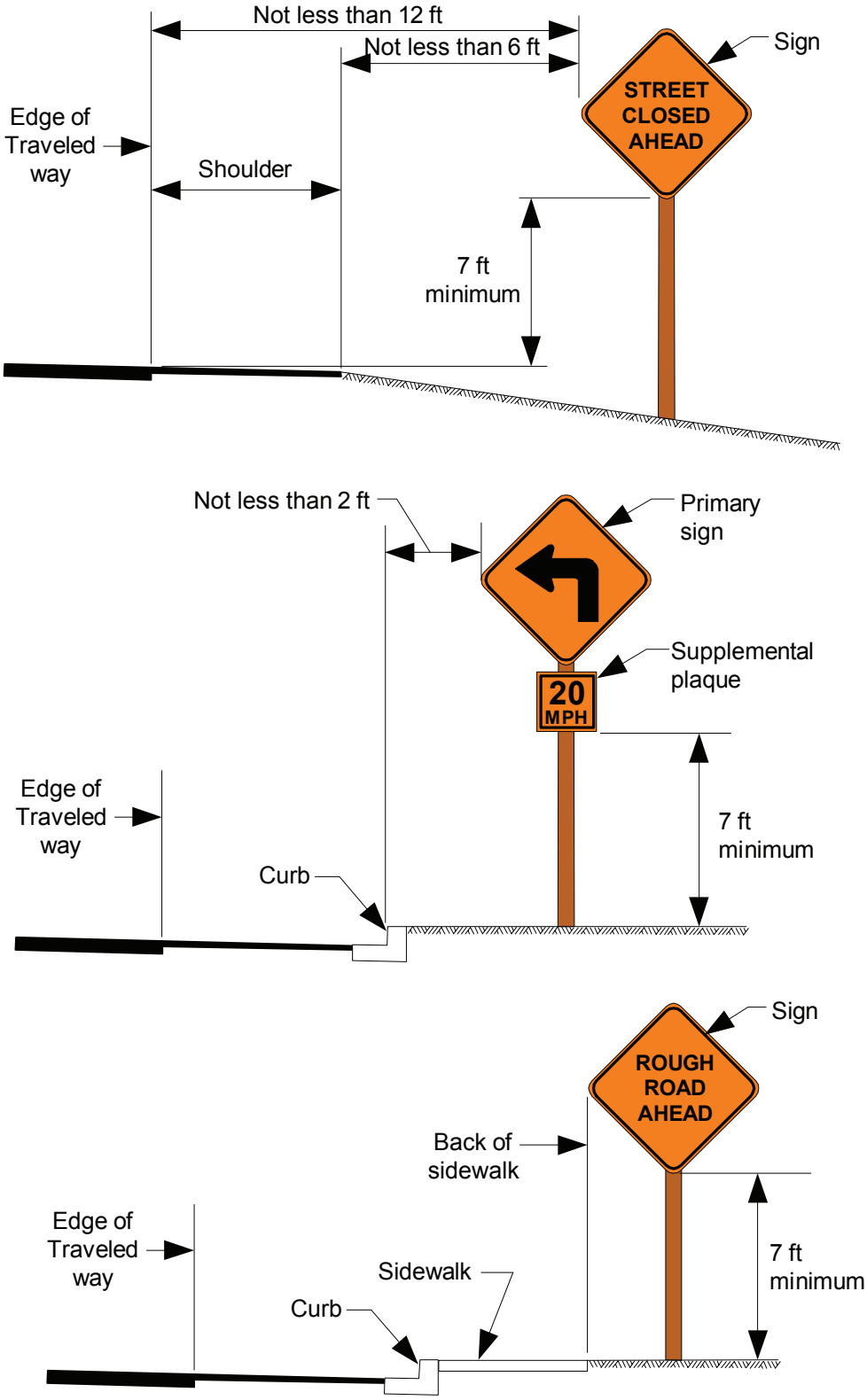

Sign Placement — Urban Areas
Figure 810-2b

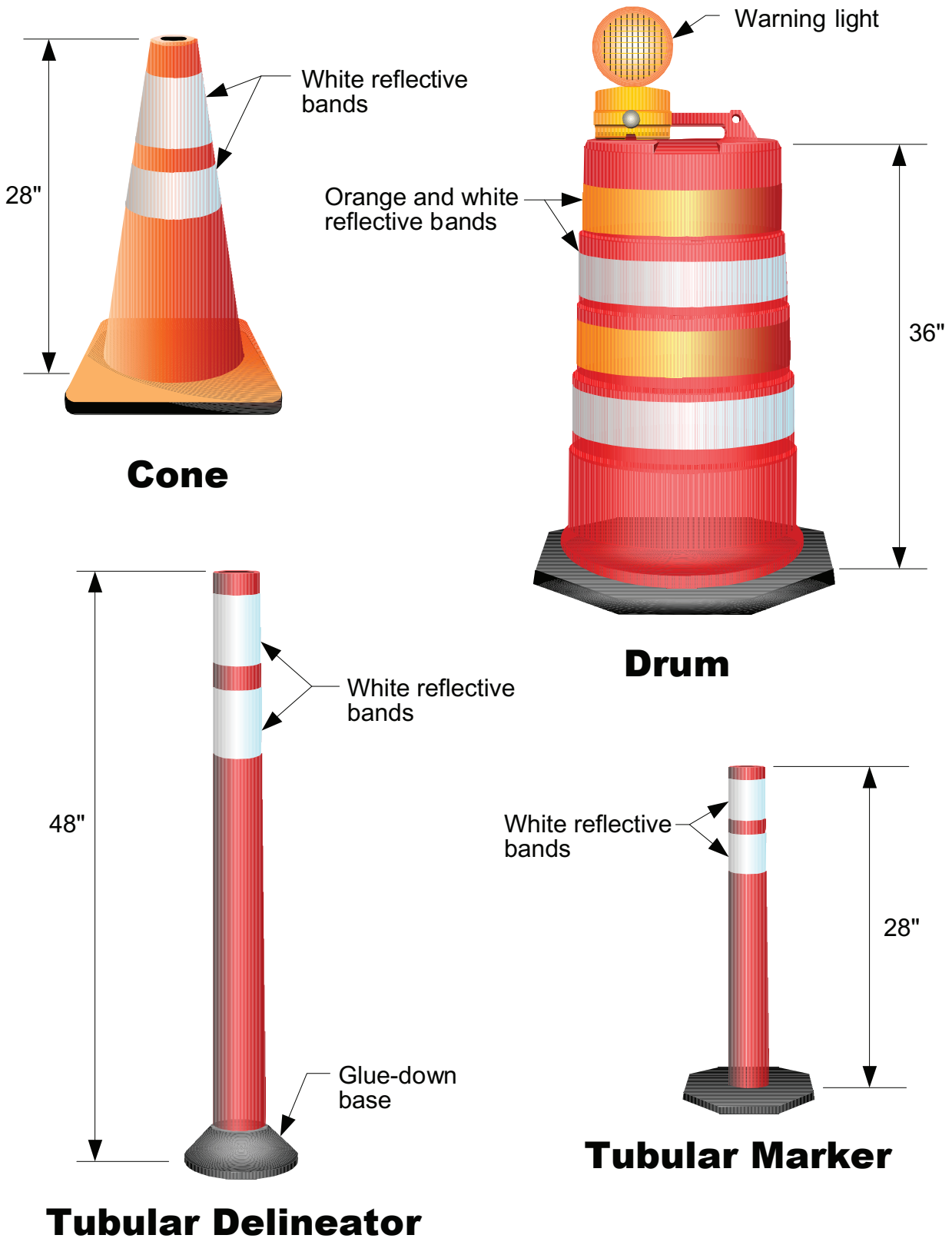

Channelization Devices
Figure 810-3

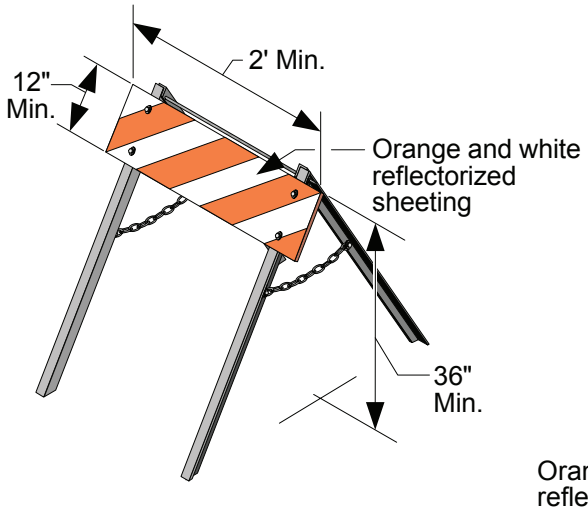

Type I Barricade

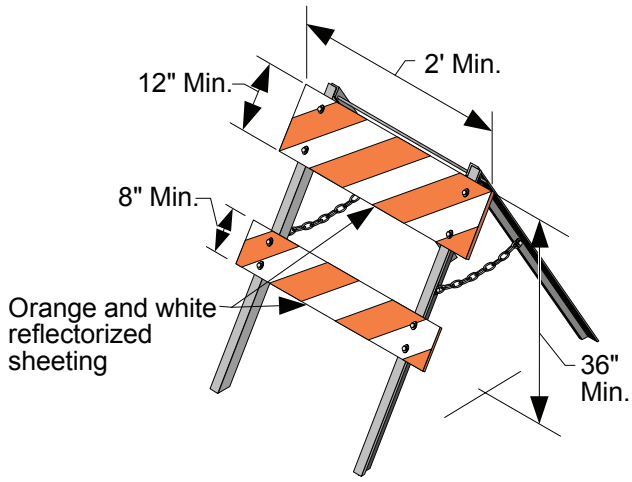

Type II Barricade

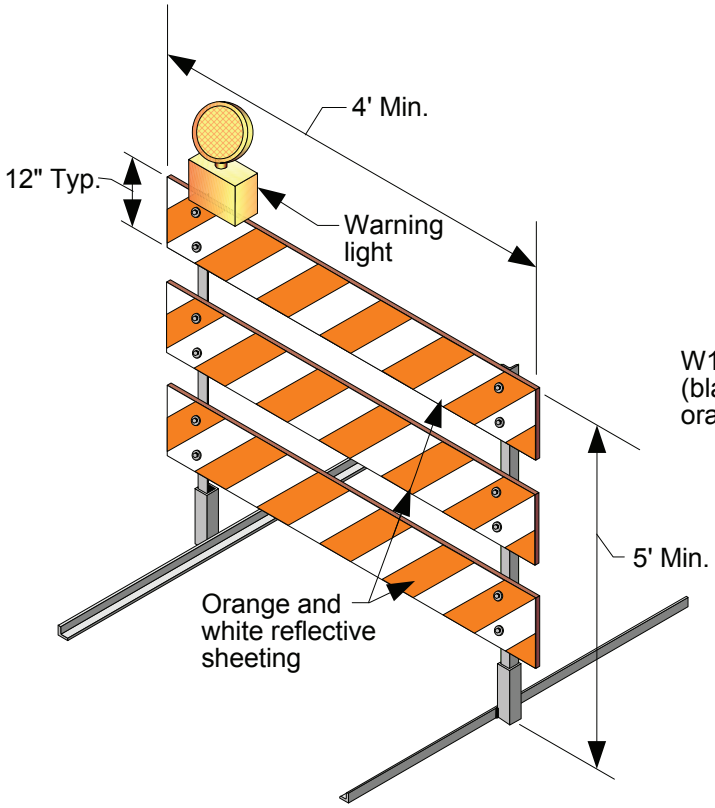

Type III Barricade

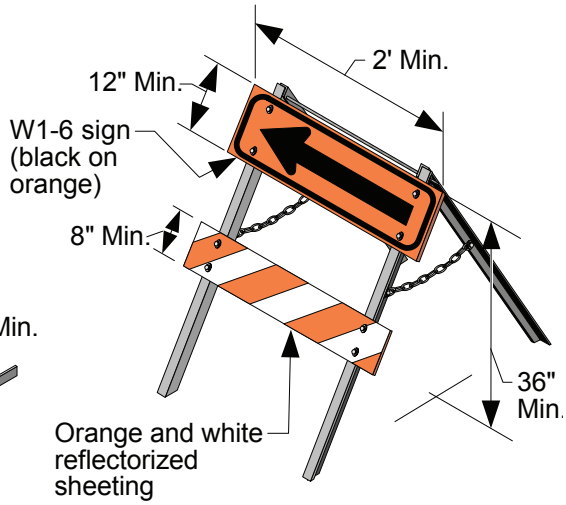

Direction Indicator Barricade

Barricade Types
Figure 810-4

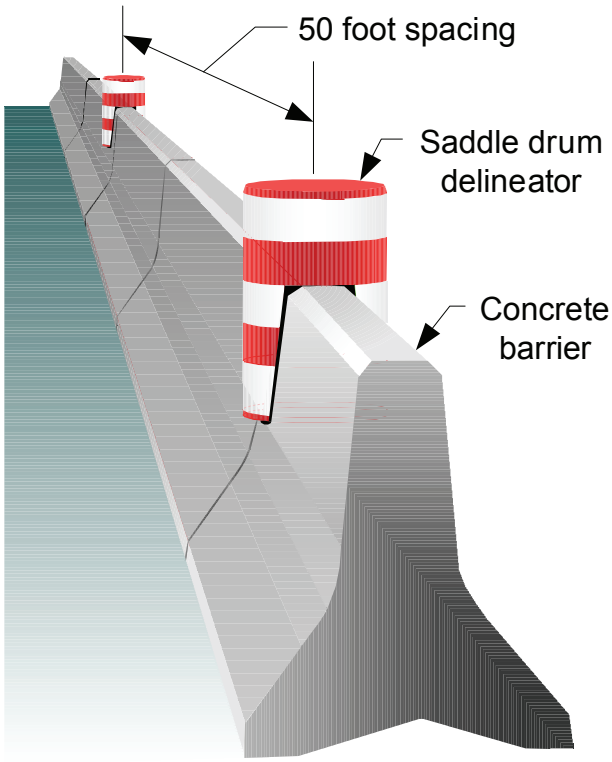

Saddle Drum Delineators

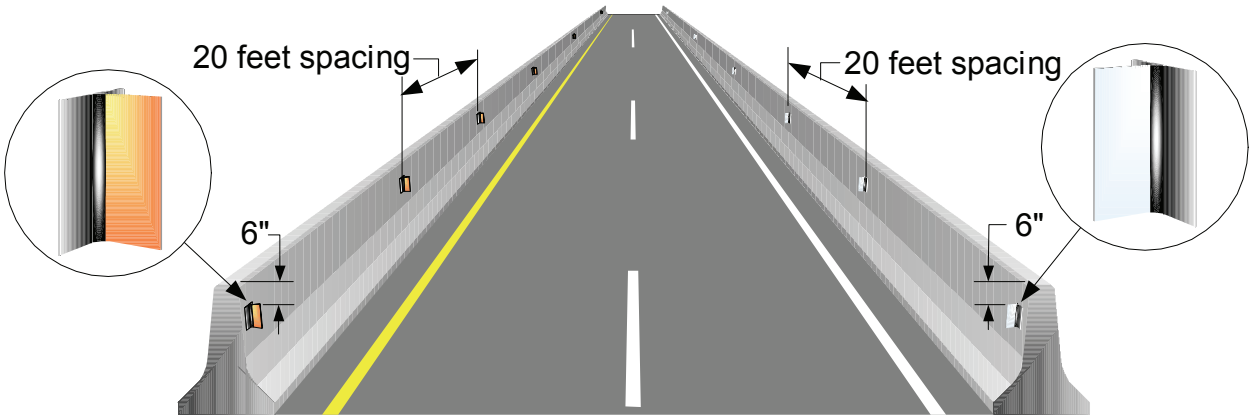

Concrete Barrier Delineators

Note: Color of delineator matches color of adjacent edge line.

Barrier Delineators
Figure 810-5

840.01 General
840.02 References
840.03 Definitions
840.04 Required Illumination
840.05 Additional Illumination
840.06 Design Criteria
840.07 Documentation

840.01 General

Illumination is provided along highways, in parking lots, and at other facilities to enhance visual perception of conditions or features that require additional driver, cyclist, or pedestrian alertness during the hours of darkness.

The Washington State Department of Transportation (WSDOT) is responsible for illumination on state highways and crossroads (as per WAC 468-18-050) with partial, modified, or full limited access control regardless of the location and on state highways located outside the corporate limits of cities. Cities are responsible for illumination of state highways within their corporate limits but outside of WSDOT limited access control.

840.02 References

Revised Code of Washington (RCW) 47.24.020, "Jurisdiction, control."

Washington Administrative Code (WAC) 468-18-040, "Design standards for rearranged county roads, frontage roads, access roads, intersections, ramps and crossings"

Washington Administrative Code (WAC) 468-18-050, "Policy on the construction, improvement and maintenance of intersections of state highways and city streets"

Directive D 22-21, "Truck Weigh Stations and Vehicle Inspection Facilities on State Highways"

Roadway Lighting Handbook, Federal Highway Administration, Implementation Package 78-15, Washington, D.C. 1978 (Reprinted April 1984)

Roadway Lighting Handbook, Addendum to Chapter Six: Designing the Lighting System Using Pavement Luminance, Federal Highway Administration, Addendum to Implementation Package 78-15. Washington, D.C. 1983

An Informational Guide for Roadway Lighting, AASHTO, Washington, DC 1984

American National Standard Practice for Roadway Lighting, IES RP-8-1983, New York, NY 1983

Recommended Practice for Tunnel Lighting, IESNA RP-22-96, New York, NY 1996

National Electrical Code, NFPA, Quincy, MA

City Streets as a Part of the State Highway - Final Report, WSDOT 1997

Standard Plans for Road, Bridge, and Municipal Construction (Standard Plans), M 21-01 WSDOT

840.03 Definitions

footcandle The illumination of a surface one square foot in area on which is uniformly distributed a flux of one lumen. A footcandle equals one lumen per square foot.

lamp lumens The total light output from a lamp in lumens. (A lumen being a unit of luminous flux.)

luminance Luminous intensity per unit projected area of any surface, as measured from a specific direction. The units of luminance are footcandles. Roadway luminance is the light projected from a luminaire that travels toward a given area, represented by a point on the pavement surface and then back towards the observer, opposite to the direction of travel.

luminous flux The time rate of flow of light.

maximum veiling luminance ratio This ratio is the maximum veiling luminance divided by the average luminance over a given design area for an observer traveling parallel to the roadway center line.The maximum veiling luminance ratio is 0.3:1.

minimum light level The minimum light intensity of illumination at any single point within the design area measured just prior to relamping the system.

minimum average light level The average of all light intensities within the design area measured just prior to relamping the system.

mounting height The vertical distance between the surface of the design area and the center of the light source of the luminaire. This is the distance used to compute the light level of the design area.

pole height (H1) The vertical distance from the light source to the pole base. This distance is specified in contracts and used by the pole manufacturers to fabricate the light standard. In curb and sidewalk areas, the H1 distance is assumed to equal the mounting height. Typically, the mounting height in fill sections is less than the H1 distance while the mounting height in cut sections is equal to or greater than the H1 distance.

security lighting A minimal amount of lighting used to illuminate areas for public safety or theft reduction. Security lighting for walkways is the lighting of angle points and shadow areas.

spacing The distance in feet measured on center line between adjacent luminaires.

uniformity ratio The ratio of the minimum average light level on the design area to the minimum light level of the same area.

veiling luminance The stray light produced within the eye by the light source that alters the apparent brightness of an object within the visual field and the background against which it is viewed. Conceptually, veiling luminance is the light that travels directly from the luminaire to the observers eye.

840.04 Required Illumination

The design matrices identify the design levels for illumination on all preservation and improvement projects. (See Chapter 325.) These levels, basic or full, are indicated in the columns.

At the basic design level for minor safety or preservation work, providing breakaway features on existing light standards (when required), replacing deficient electrical components, and other minor work would be the extent of consideration. Providing additional lighting or relocating light standards on preservation projects may be considered as a spot safety enhancement.

A full design level notation in a design matrix column indicates that the required illumination specified in this chapter is necessary. When the illumination column has an EU (evaluate upgrade to full design level), consider providing illumination if it would be beneficial to the specific project and document accordingly.

Figures 840-1 through 840-5 show examples of illumination for highway applications. Illumination in these examples and the locations listed below are required on state highways.

For Minor Operational Enhancement projects using the design matrices in Chapter 340, illumination is not required.

(1) Freeway Off-Ramps and On-Ramps

Provide the necessary number of light standards to illuminate the design area of all freeway off-ramp gore areas and on-ramp acceleration tapers. See 840.06(2).

(2) Freeway Ramp Terminals

A single light standard is required at the intersection of a ramp terminal with a two-lane roadway. At the intersection of a ramp terminal with a multilane roadway, additional lighting is required to illuminate the intersection design area. See Figure 840-5. Additional illumination is also required if the intersection has left-turn channelization or a traffic signal.

(3) Intersections With Left-Turn Channelization

Illumination of the intersection area and the left-turn storage is required for intersections with painted or other low profile pavement markings such as raised pavement markings. When the channelization is delineated with curbs, raised medians or islands, illuminate the raised channelization from the beginning of the left-turn taper. Illumination of the secondary road intersecting the state highway can be beneficial to the motoring public. Funding and design, however, are the local agency's responsibility. Contact that agency to see if they are interested in participating.

(4) Intersections With Traffic Signals

All traffic signals on state highways are illuminated. The extent of illumination is the same as for intersections with left-turn channelization. Illumination of the crossroad is beneficial and participation of the local agency is desirable. In cities with a population under 22,500, the state may assume responsibility for illumination installed on signal standards.

(5) Railroad Crossings With Gates or Signals

Railroad crossings with automated gates or signals on state highways are illuminated if there is nighttime train traffic. Within the corporate limits of a city, illumination is the responsibility of that agency.

(6) Transit Flyer Stops

Illuminate the loading area of a transit flyer stop located within the limited access boundaries.

(7) Major Parking Lots

All parking lots with usage exceeding 50 vehicles during the nighttime peak hour are considered major parking lots. Provide an illumination design that will produce the light levels shown in Figure 840-6 for the parking area and bus loading zone. During periods of low usage at night, only security lighting is required. Provide an electrical circuitry design that allows the illumination system to be reduced to approximately 25% of the required light level.

(8) Minor Parking Lots

Minor parking lots have a nighttime peak hour usage of 50 or less vehicles. Provide security level lighting for those lots owned and maintained by the state. Security lighting consists of lighting the entrance and exit to the lot.

(9) Truck Weigh Sites

Provide illumination of the scale platforms, parking areas, and inspection areas of weigh sites.

(10) Midblock Pedestrian Crossings

Illuminate the entire midblock pedestrian crossing, including the crosswalks, the refuge area in the roadway, and the sidewalks or shoulders adjacent to the crosswalk. When a raised median pedestrian refuge design is used, illuminate this raised channelization.

(11) Long Tunnels

Long tunnels have a portal to portal length greater than the stopping sight distance. Provide both nighttime and daytime illumination for long tunnels.

840.05 Additional Illumination

At certain locations, additional illumination is desirable to provide better definition of nighttime driving conditions or to provide consistency with local agency goals and enhancement projects. For improvement projects, consider additional illumination on state highways where there is a diminished level of service or a nighttime accident frequency condition exists.

Diminished Level of Service is a mobility condition where the nighttime peak hour level of service is D or lower. When volumes are used to determine the level of service, use traffic counts taken during the evening peak hour. Peaking characteristics in urban areas are related to the time of day. Traffic counts taken in the summer between 4:30 p.m. and 7:30 a.m. may be used as nighttime volumes if adjustment factors for differences in seasonal traffic volumes are applied for November, December, and January.

Nighttime Accident Frequency Condition is when the number of nighttime accidents equals or exceeds the number of daytime accidents. An engineering study that indicates illumination will result in a reduction in nighttime accidents is required to demonstrate justification. Consider the seasonal variations in lighting conditions when reviewing reported accidents. Accident reporting forms, using a specific time period to distinguish between “day” and “night,” might not indicate the actual lighting conditions at the time of an accident. Consider the time of year when determining if an accident occurred at nighttime. An accident occurring at 5:00 p.m. in July would be a daytime accident, but an accident occurring at the same time in December would be during the hours of darkness.

The mitigation of high nighttime, pedestrian accident locations requires different lighting strategies than vehicular accident locations. Provide light levels to emphasize crosswalks and adjacent sidewalks. Multiple lane highways with two-way left-turn lanes, in urban build up areas, are typically high speed facilities with numerous road approaches. These roadways allow numerous vehicle entry and exit points and provide few crossing opportunities for pedestrians. Additional illumination may be justified for this condition.

Document the justification for the additional illumination in the Design Documentation Package (DDP).

(1) Highways

Proposals to provide full (continuous) illumination require approval of the State Traffic Engineer. Regions may choose to develop system plans (regional or corridor specific) for providing full (continuous) illumination. The approval of a system plan will eliminate the need for a project specific approval.

The decision whether to provide full (continuous) illumination is to be made in the scoping stage and communicated to the designers as soon as possible.

(a) On the main line of full limited access highways, consider full (continuous) illumination if a diminished level of service exists and any two of the following conditions are satisfied:

- There are three or more successive interchanges with an average spacing of $1^1/_2$ miles or less measured from the center of each interchange or a common point such as major cross roads.
- The segment is in an urban area.
- The nighttime accident frequency condition exists.
- A benefit cost analysis between the required and full (continuous) illumination.

(b) On the main line of highways without full access control, consider full (continuous) illumination if the segment of highway is in a commercial area and either a diminished level of service exists or the nighttime accident frequency exists and an engineering study indicates that nighttime driving conditions will be improved.

(2) Ramps

At ramps, consider additional illumination when a diminished level of service exists for the ramps and any of the following conditions are present:

- The ramp alignment and grade are complex.
- There are routine queues of five or more vehicles per lane at the ramp terminal due to traffic control features.
- The nighttime accident frequency condition exists.
- The criteria for continuous mainline illumination have been satisfied.

(3) Crossroads

At crossroads, consider additional illumination when a diminished level of service exists and the nighttime accident frequency exists. Also, consider additional illumination if the crossroad is in a tunnel, undercrossing, or lid.

(4) Intersections Without Channelization

Consider illumination of intersections without channelization in urban areas and other locations if a nighttime accident frequency requirement is satisfied or the traffic volumes and movements would be improved with the installation of left turn channelization.

(5) Tunnels, Underpasses, or Lids

Consider illumination of tunnels, underpasses or lids if portal conditions result in a brightness in the tunnel that is less than the measured daytime brightness of the approach roadway divided by 15 and the length to vertical clearance ratio is 10:1 or greater.

(6) Construction Zones and Detours

Consider illumination of construction zones and detours under the following conditions:

- if construction activities take place on the roadway at night.

- when traffic flow is split around an obstruction.
- for detours, where the alignment and grade are unusual and require additional driver, cyclist, or pedestrian alertness.

(7) Transit Stops

The responsibility for lighting at transit stops is shared with the transit company. Consider illumination of transit stops with shelters, as this generally is indicative of higher passenger usage. Negotiation with the transit agencies is required for the funding and maintenance of this illumination. If the transit agency is unwilling to participate in the funding and maintenance of the illumination, a single light standard positioned to illuminate both the transit pullout area and the loading area can be considered.

(8) Bridges

Justification for illuminating bridges is the same as that for highways with or without full limited access control, as applicable.

(9) Railroad Crossing Without Gates or Signals

Illumination of these facilities is justified if there is a potential for nighttime accidents. Consider the extent of nighttime train activity in making this determination. Also, consider illumination if there is a probability that railroad cars will be stopped on the crossing during the nighttime.

(10) Walkways and Bicycle Trails

Illumination of pedestrian walkways is justified if the walkway is a connection between two highway facilities. This might be between parking areas and rest room buildings at rest areas, between drop-off or pick-up points and bus loading areas at flyer stops, or between parking areas and bus loading areas or ferry loading zones, for example. Consider illuminating existing walkways and bicycle trails if security problems have been reported. Also, consider illumination if security problems are anticipated. In these conditions the walkways and bicycle trails are illuminated to the level shown in Figure 840-6.

(11) Rest Areas

Provide illumination at the roadway diverge and merge sections within rest areas and the parking areas as for a major parking lot.

840.06 Design Criteria

(1) Light Levels

Light levels vary with the class of highway, development of the adjacent area, and the level of nighttime activity. Light level requirements for highways and other facilities are shown in Figure 840-6. These levels are the minimum average light levels required for a design area at the end of rated lamp life for applications requiring a spacing calculation. Light level requirements are not applicable for single light standard or security lighting installations. See Chapters 430 and 440 for design classes of highways.

The types of activity areas, shown below, are related to the number of pedestrian crossings. These crossings need not occur within a single crosswalk and can be at several locations along the roadway in an area with pedestrian generators. Land use and activity classifications are as follows:

- **High Activity.** Areas with over 100 pedestrian crossings during the nighttime peak pedestrian hour usage. Examples are: downtown retail areas, near stage theaters, concert halls, stadiums, and transit terminals; and parking areas adjacent to these facilities.
- **Medium Activity.** Areas with pedestrian crossings that number between 11 and 100 during the nighttime peak pedestrian hour usage. Examples are: downtown office areas, blocks with libraries, movie theaters, apartments, neighborhood shopping, industrial buildings, and older city areas; and streets with transit lines.
- **Low Activity.** Areas with pedestrian crossings that number less than 11 during the nighttime peak pedestrian hour usage. Examples are suburban single family areas, low density residential developments, and rural or semirural areas.

(2) Design Areas

The design area is that portion of the roadway, parking lot, or other facility that is subject to the minimum light level, minimum average light level, uniformity ratio, and maximum veiling luminance ratio design requirements. This encompasses the area between the edges of the traveled way along the roadway; the outer edges of the stopping points at intersections; and, when present, a bike lane adjacent to the traveled way. When the roadway has adjacent sidewalks, the design area includes these features.

Design area requirements for various applications are shown in Figures 840-1 through 840-5 and the following:

- One-lane off-ramp. Two main line through lanes and the ramp lane, including gore area, from the gore point to a point 200 ft (minimum) down stream of the gore point. A 100 ft longitudinal tolerance either way from the gore point is allowed.
- Two-lane off-ramp. Two main line through lanes and both ramp lanes, including gore area, from a point 200 ft upstream of the gore point to a point 200 ft downstream from the gore point. A 100 ft longitudinal tolerance either way from the gore point is allowed.
- One-lane on-ramp. Two main line through lanes and the ramp lane, from a point where the ramp lane is 10 ft wide to a point 200 ft upstream. A 100 ft longitudinal tolerance either way is allowed. This includes auxiliary lane on connections and lane reductions.
- Two-lane on-ramp. Two main line through lanes and the ramp lanes from a point where the ramp lanes are 22 ft wide to a point 200 ft upstream. A 100 ft longitudinal tolerance either way is allowed.
- Intersections channelized with pavement markings. The design area has two components, the intersection area and the approach areas. The intersection area is the area between the stopping points on both the main road and the minor road, including marked or unmarked crosswalks. The approach areas are the areas on the main roadway between the stopping point and where the left-turn lane is full width.
- Intersections with raised channelization. The design area has two components, the intersection area and the approach areas. The intersection area is the area between the stopping points on both the main road and the minor road, including marked or unmarked crosswalks. The approach areas are the areas on the main roadway between the stopping point and where the left-turn taper begins.
- Unchannelized intersection. The area between the stopping points on both the main road and the minor road, including marked or unmarked crosswalks.
- Railroad crossings. The roadway width from a point 50 ft either side of the track (the approach side only for one way roadways).
- Transit loading areas. The lane width and length designated for loading.
- Major parking lots. The entire area designated for parking including internal access lanes.
- Scale platforms at weigh sites. The approach width from the beginning of the scale platform to the end of the platform.
- Inspection areas at weigh sites. The area dedicated to inspection as agreed upon with the Washington State Patrol.

(3) Light Levels for Tunnels and Underpasses

Short tunnels and underpasses, with a length to vertical clearance ratio of 10:1 or less, normally do not have daytime illumination. Short tunnels with length to vertical clearance ratios greater than 10:1 are treated the same as an entrance zone on a long tunnel to establish daytime light levels. Nighttime light level requirements for short tunnels on continuously illuminated roadways are the same as the light level required on the roadway outside the tunnel.

Long tunnels are divided into zones for the determination of daytime light levels. Each zone is equal in length to the wet pavement stopping

sight distance. The entrance zone beginning point is a point outside the portal where the motorist's view is confined to the predominance of the darkened tunnel structure.

The daytime entrance zone light level is dependent upon the brightness of the features within the motorist's view on the portal approach. The brightness level is defined as the average brightness measured over a 20 degree cone at a point 500 ft in advance of the portal. The entrance zone light level produced within the tunnel must be sufficient to provide a brightness level of approximately 5% of the measured portal brightness, after adjustment for the reflectivity of the roadway, walls, and ceiling. Design successive zones for a daytime light level of 5% of the previous zone light level to a minimum value of 5 footcandles. Requirements for nighttime light levels for long tunnels on continuously illuminated roadways are the same as the light level required on a roadway outside the tunnel. Provide adequate illumination of fire protection equipment, alarm pull boxes, phones, and emergency exits in long tunnels to minimize the risk associated with catastrophic accidents.

(4) Light Standards

(a) **Light Standards.** Light standards are the most common supports used to provide illumination for highway facilities. The 40 ft and 50 ft high light standards with breakaway bases and Type 1 mast arms are used predominately on state highways. The angular Type 2 mast arms are allowed only to match existing systems. Use Type 1 mast arms on all new systems. Cities and counties may elect to use different mounting heights to address factors unique to their environments. On state highways, alternate light standards may be use if requested by the city or county, provided they agree to pay any additional costs associated with this change.

The typical location for a light standard is on the right shoulder. When considering designs that propose light standards mounted on concrete barrier in the median, consider the total life cycle cost of the system, including the user costs resulting from lane closures required for relamping and repair operations. Light standards located in the vicinity of overhead power lines require a 10 ft clearance from the power line to any portion of the light standard or luminaire. Consult the HQ Bridge and Structures Office when mounting lights on structures such as retaining walls and bridge railings.

It is preferable to locate a light standard as far from the traveled way as possible to reduce the potential of impacts from errant vehicles. The length of the mast arm can vary from 6 ft to 16 ft to allow for this placement. The preferred position for the luminaire is over the edge line. However, some flexibility is acceptable with the luminaire position to allow for placement of the light standard. When necessary, the luminaire can be positioned up to 4 ft from the edge line. See Figure 840-7.

When light standards are located within the Design Clear Zone, breakaway features are used to reduce the severity of a potential impact. To allow these breakaway features to function as intended, it is preferred that they be installed on slopes that are 6H:1V or flatter (cut or fill slope). On fill slopes where flattening of the slope to achieve a 6H:1V slope is not practical, consider locating the light standard at least 12 ft beyond the slope break. If this is not possible, locate the light standard at the slope break. Do not place the light standard on a fill slope that is 3H:1V or steeper unless it is behind a traffic barrier.

When placing the light standard on a cut slope, that is 3H:1V or flatter (such as the backslope of a ditch), the preferred location is outside of the Design Clear Zone. If this is not practical, the light standard may be installed with a modified foundation that matches the slope's surface. In this case, it is critical that the light standard be positioned at least 4 ft beyond the bottom of the ditch. Locate light standards on slopes steeper than 3H:1V outside of the Design Clear Zone. Even when located beyond the Design Clear Zone, it is desirable to use a breakaway base if there is a possibility it could be struck by an errant vehicle.

In curb and sidewalk sections, locate the light standard behind the sidewalk.

Breakaway bases on light standards are a safety requirement for higher speed roadways. They are not always desirable at other locations. Locations where fixed bases are installed are:

- Parking lots.
- Medians where the light standard is mounted on median barrier.
- Behind traffic barrier, beyond the barrier's deflection design value (See Chapter 710).
- Along highways with posted speeds of 35 mph or less where there is medium or high pedestrian activity.
- Pedestrian walkways, bike paths, and shared use paths.

(b) **Light Standard Heights.** Unusual pole heights require longer fabrication time and are not recommended. Use pole heights of 40 ft and 50 ft for roadway illumination. These pole heights will result in variable mounting heights for the luminaires. Use the actual mounting height at each location when calculating light standard spacing. High mast light supports may be considered for complex interchanges where continuous lighting is justified. Initial construction costs, long term maintenance, clear zone mitigation, spill-over light on to adjacent properties, and negative visual impacts are important factors when considering high mast illumination. Shorter light standards of 30 ft or less may be used for minor parking lots, trails, pedestrian walkways, and locations with restricted vertical clearance.

(c) **Standard Luminaire.** The cobra head style, high pressure sodium vapor luminaire with Type III, medium cut-off light distribution is the normal light source used for state highway lighting. A Type III distribution has an oval pattern, and a Type V distribution has a circular pattern. Post top mounted luminaires and other decorative light fixtures with Type V patterns are more effective for area lighting in parking lots and other locations where more symmetrical light distribution patterns are preferred. Recommended mounting heights and initial lumens for various luminaire wattages are shown in Figure 840-8.

840.07 Documentation

A list of the documents that are to be preserved [in the Design Documentation Package (DDP) or the Project File (PF)] is on the following website: http://www.wsdot.wa.gov/eesc/design/projectdev/

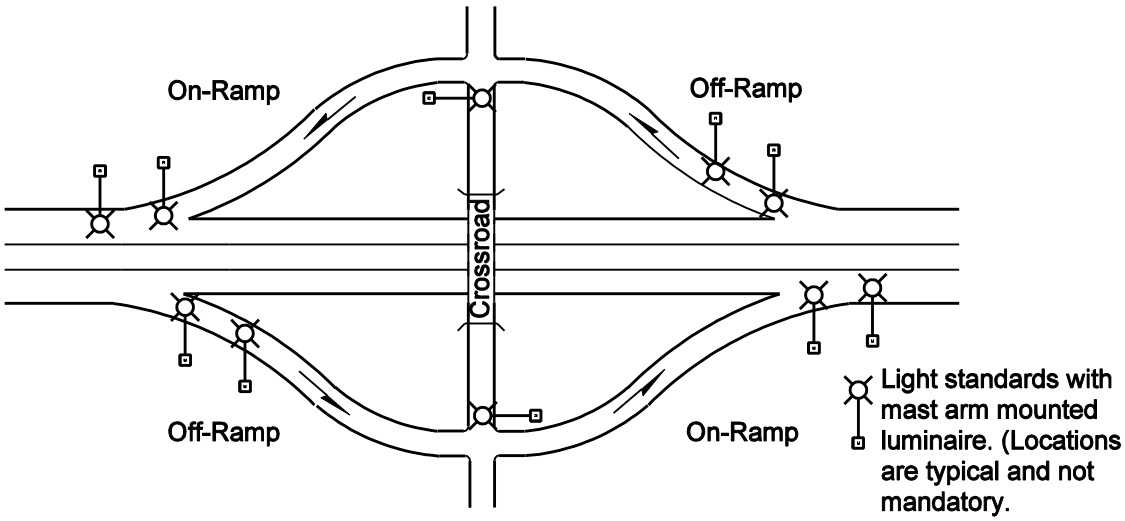

Required Illumination for a Typical Diamond Interchange

(Shown for single lane ramp connection and a two-lane crossroad without channelization.)

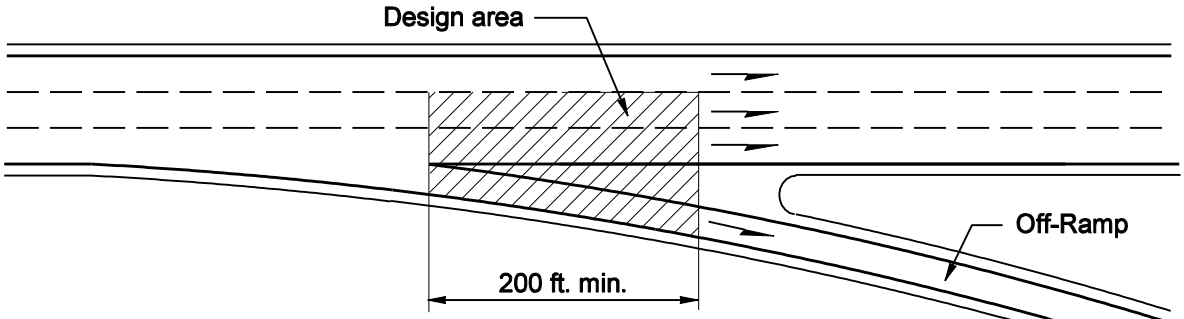

Single-Lane Off-Connection

(The design area can be shifted up to 100 ft. from the beginning of the Wide Line.)

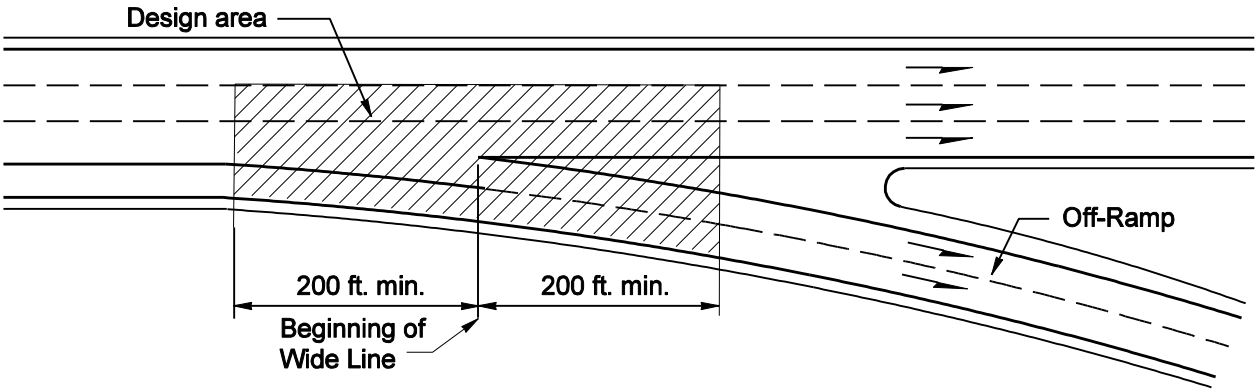

Two-Lane Off-Connection

(The design area can be shifted up to 100 ft. from the beginning of the Wide Line.)

Freeway Lighting Applications
Figure 840-1

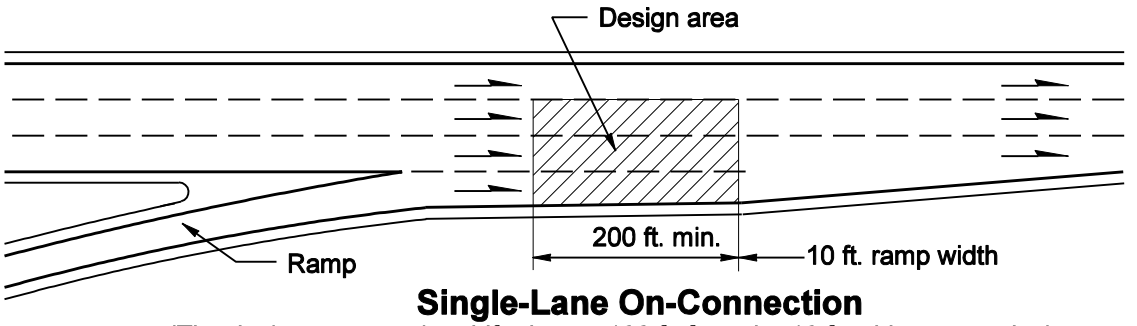

Single-Lane On-Connection

(The design area can be shifted up to 100 ft. from the 10 ft. wide ramp point.)

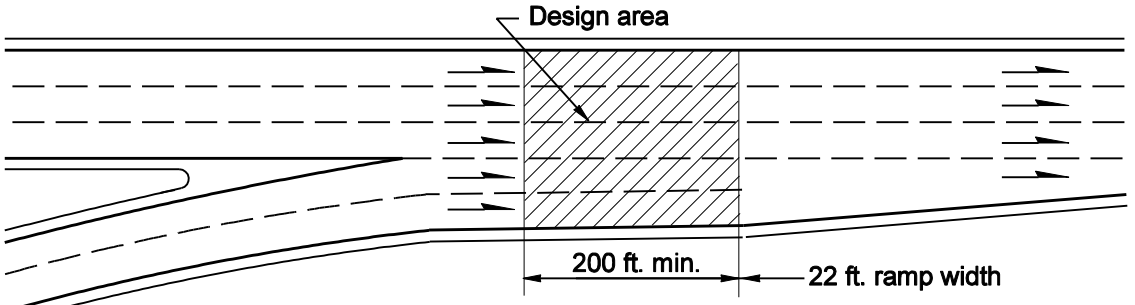

Two-Lane On-Connection

(The design area can be shifted up to 100 ft. from the 22 ft. wide ramp point.)

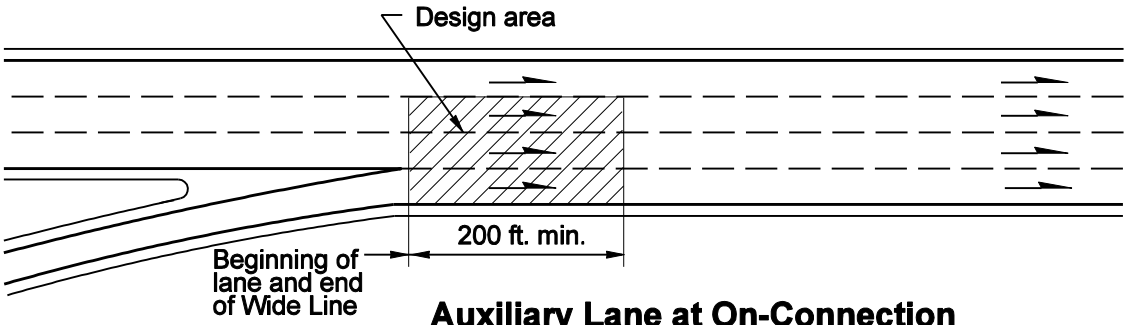

Auxiliary Lane at On-Connection

(Required only if significant weaving problem exists.)

(The design area can be shifted up to 100 ft. from the 22 ft. wide ramp point.)

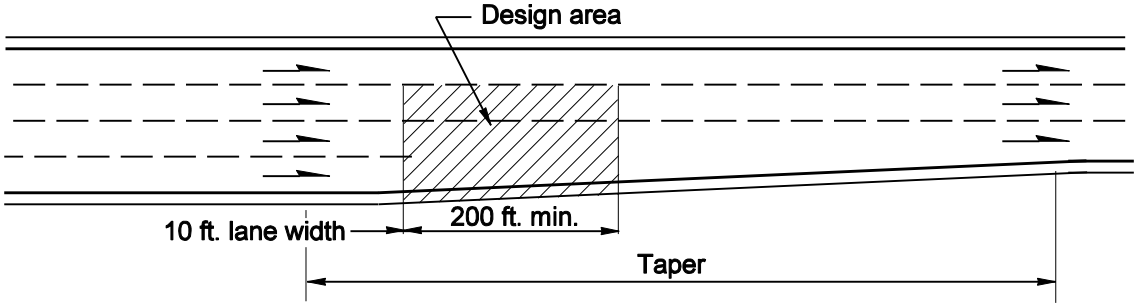

Lane Reduction

Freeway Lighting Applications

Figure 840-2

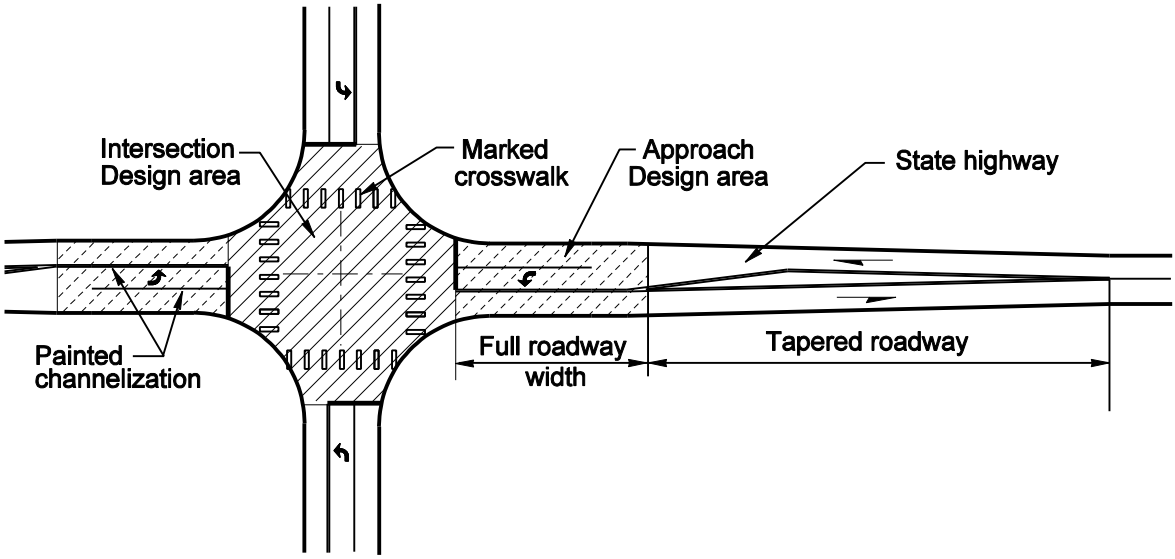

Intersection with Left-Turn Channelization

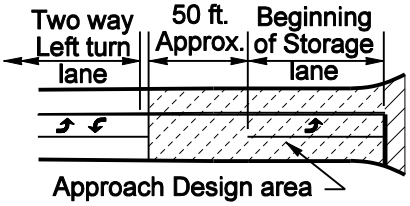

Alternate for Transitions to Two-Way Left-Turn Lanes

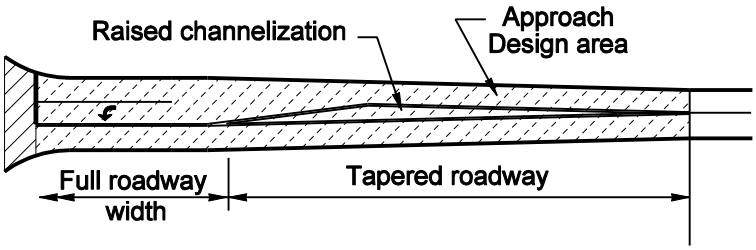

Alternate for Raised Channelization

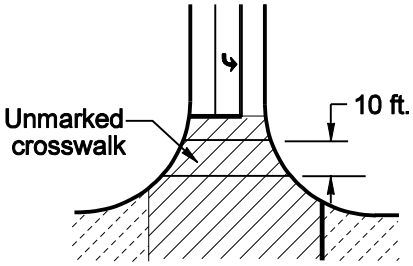

Unmarked Crosswalk Detail

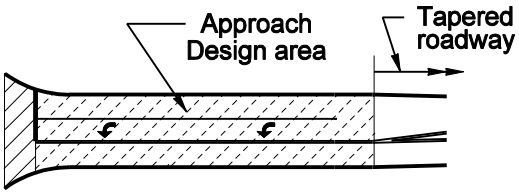

Alternate for Long Storage Lanes

Roadway Lighting Applications
Figure 840-3

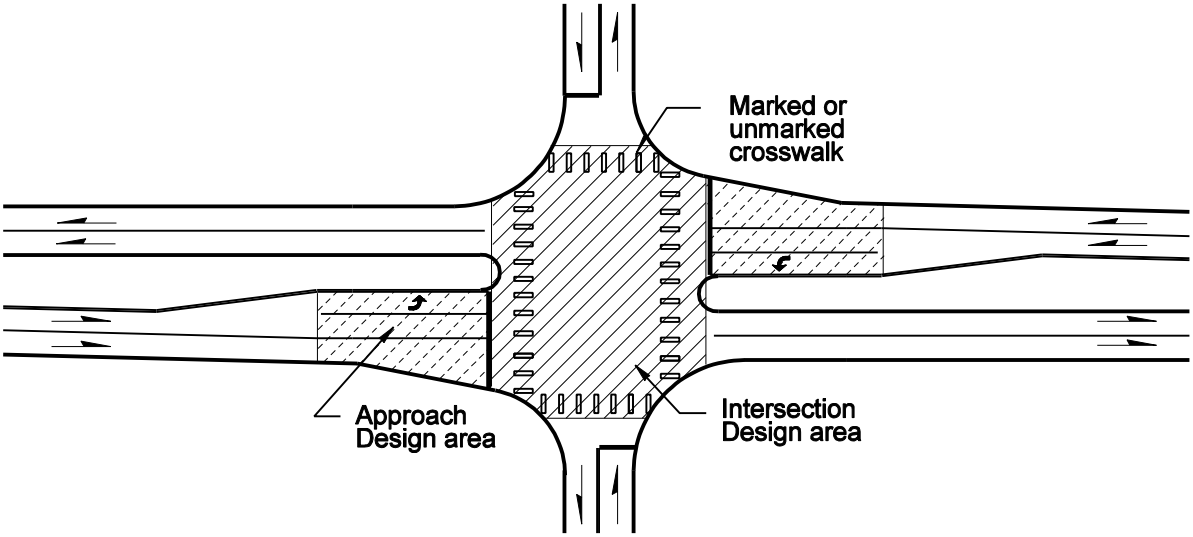

Divided Highway Intersection

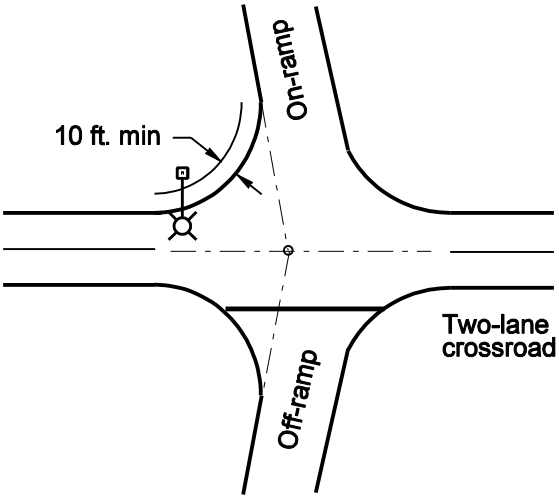

Ramp Terminals

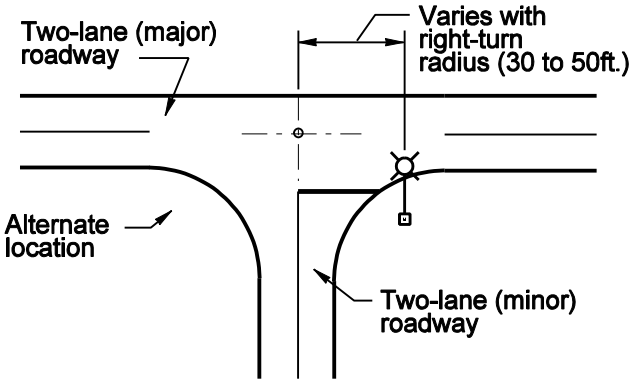

Tee Intersection Minor
(Without left-turn channelization)

Light standards with mast arm mounted luminaire. (Locations are typical and not mandatory.

Roadway Lighting Applications
Figure 840-4

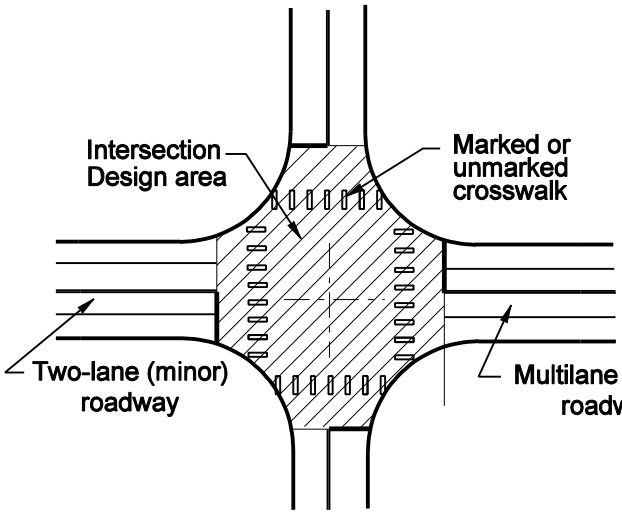

Four Way Intersection
(Without left-turn channelization)

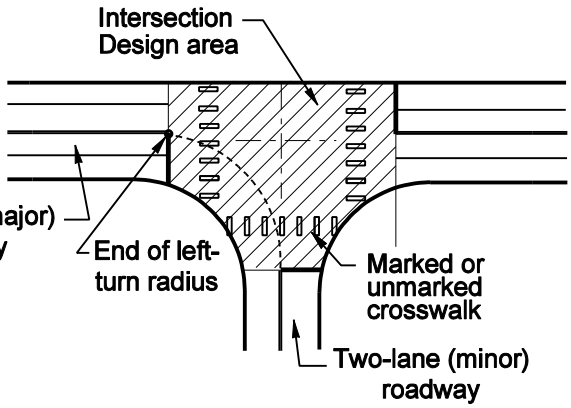

Tee Intersection Major
(Without left-turn channelization)

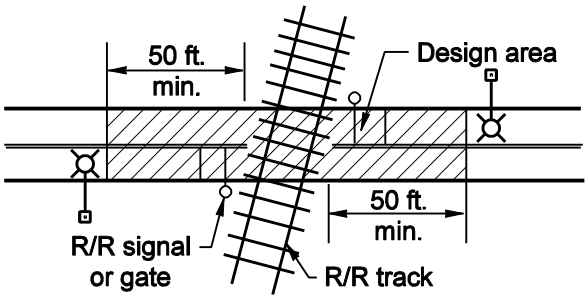

Railroad Crossing

Roadway Lighting Applications
Figure 840-5

Light Level and Uniformity Ratio Chart					
Highway Design Class	**Average Maintained Horizontal Light Level (2)**			**Maximum Uniformity Ratio** (6)	**Maximum Veiling Luminance** (7)
	Pedestrian/Area Classification				
	High (footcandles)	**Medium** (footcandles)	**Low** (footcandles)		
Highways with Full Limited Access Control (1)					
Main Line	0.6	0.6	0.6	4 : 1	0.3 : 1
Ramps	0.6	0.6	0.6	4 : 1	0.3 : 1
Crossroads	0.6	0.6	0.6	3 : 1	0.3 : 1
Ramp Intersections	0.9	0.9	0.9	3 : 1	0.3 : 1
Principal Arterials (3)					
Main Line	1.6	1.2	0.6	3 : 1	0.3 : 1
Intersections	1.6	1.2	0.9	3 : 1	0.3 : 1
Minor Arterials					
Main Line	1.2	0.9	0.6	3 : 1	0.3 : 1
Intersections	1.2	0.9	0.9	3 : 1	0.3 : 1
Collectors					
Main Line	1.1	0.8	0.6	3 : 1	0.3 : 1
Intersections	1.1	1.0	0.9	3 : 1	0.3 : 1
Construction Lanes and Detours	1.0	1.0	1.0	3 : 1	0.3 : 1
Parking Lots / Rest Areas (5)	0.8	0.8	0.8	3 : 1	0.3 : 1
Vehicle Inspection Areas	2.0	2.0	2.0	3 : 1	0.3 : 1
Walkways and Bicycle Trails	0.8	0.8	0.8	3 : 1	0.3 : 1
Weigh Scales	0.8	0.8	0.8	3 : 1	0.3 : 1
Transit Stops (4)	2.0	2.0	2.0	NA (8)	0.3 : 1

Notes

(1) The minimum light level is 0.2 fc for any application with an average light level of 0.6 fc. The minimum light levels for all other applications are controlled by the uniformity ratio.

(2) Light level and uniformity ratio apply only when installation of more than one light standard is justified.

(3) Light levels shown also apply to modified and partial limited access control.

(4) For single light standard installations, provide the light level at the location where the bus stops for riders. (See 840.05 (6))

(5) Includes illumination at ramp on and off connections.

(6) $\frac{\text{Average Light Level}}{\text{Minimum Light Level}}$

(7) $\frac{\text{Maximum Veiling Luminance}}{\text{Average Luminance}}$

(8) Uniformity ratio is 3:1 when more than one light standard is justified.

Light Levels and Uniformity Ratios

Figure 840-6

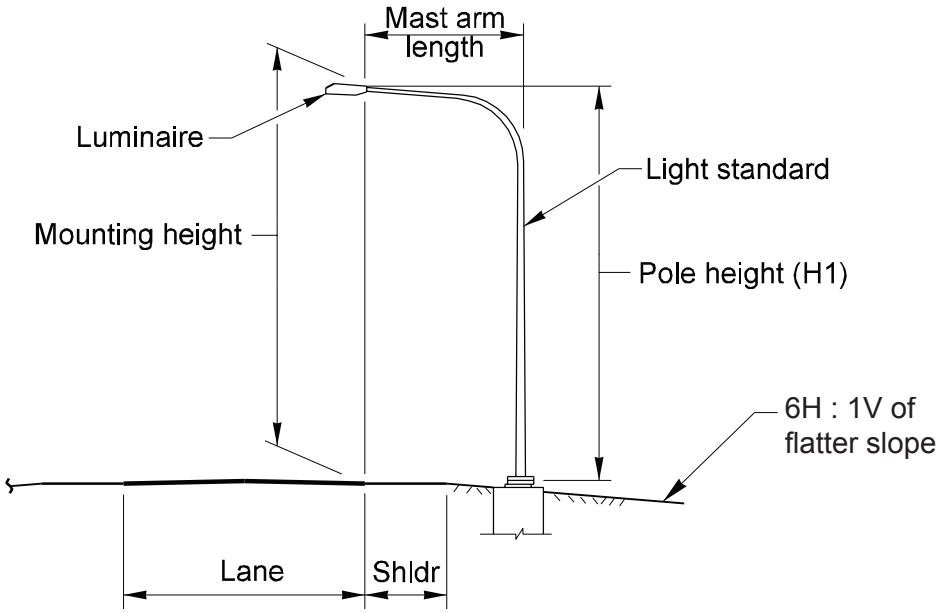

Preferred Location
Embankment slope

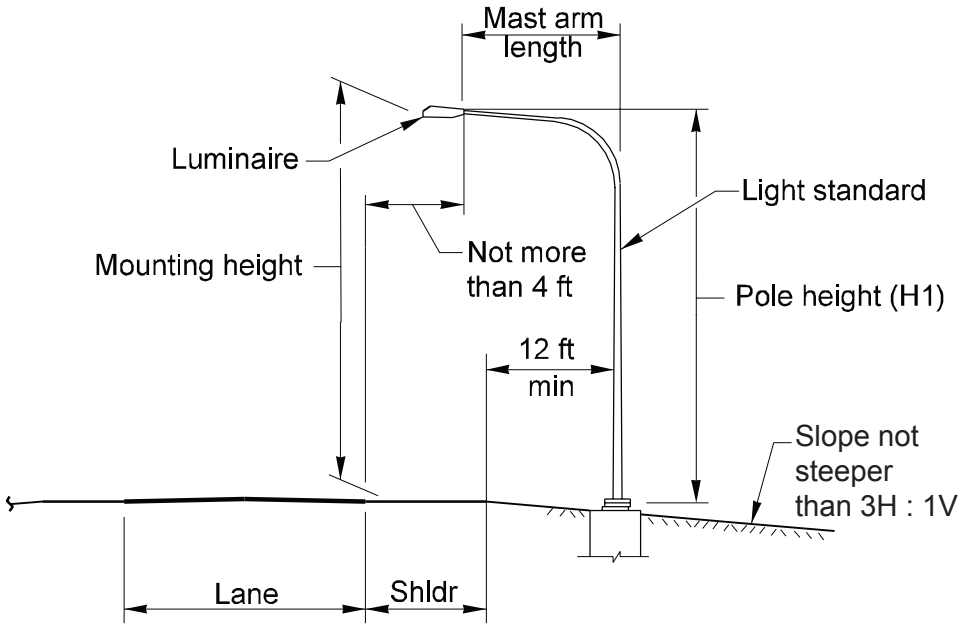

Alternate Location

Light Standard Locations
Figure 840-7

Luminaire Wattage	Initial Lumens*	H1	Recommended Mounting Height	
			Maximum	Minimum
200	22,000	30 ft	32 ft	28 ft
250	28,000	35 ft	38 ft	32 ft
310	37,000	40 ft	44 ft	36 ft
400	50,000	40 ft	44 ft	36 ft
400	50,000	50 ft	54 ft	46 ft
1,000	140,000	100 ft	110 ft	90 ft

Note:
Lumens are for high pressure sodium vapor luminaires

Luminaire Wattage, Lumens, and Mounting Heights
Figure 840-8

920.01 General
920.02 References
920.03 Definitions
920.04 Design Considerations
920.05 Road Approach Design Template
920.06 Sight Distance
920.07 Road Approach Location
920.08 Drainage Requirements
920.09 Procedures
920.10 Documentation

920.01 General

Every owner of property that abuts the state highway system where limited access rights have not been acquired has a right to reasonable access to the state highway system. For considerations, requirements, and restrictions concerning road approaches on state highways where limited access rights have not been acquired, see Chapters 1420 and 1435.

For considerations, requirements, and restrictions concerning road approaches on state highways where limited access rights have been acquired from the abutting property owners, see Chapters 1420 and 1430.

Road approaches are designed and built on the state highway system to provide access at the locations provided for in Chapters 1430 and 1435. This chapter applies to road approaches on state highways in unincorporated areas and within incorporated areas where limited access rights have been acquired. Road approaches on state highways within incorporated areas where limited access rights have not been acquired are the jurisdiction of the local agency, but conformance to the requirements of this Chapter is required by statute (RCW 47.50.030).

920.02 References

Revised Code of Washington (RCW) 47.32.150, "Approach roads, other appurtenances — Permit"

RCW 47.32.160, "Approach roads, other appurtenances — Rules — Construction, maintenance of approach roads"

RCW 47.32.170, "Approach roads, other appurtenances — Removal of installations from right of way for default"

RCW 47.50, "Highway Access Management"

Washington Administrative Code (WAC) 468-51, "Highway Access Management Access Permits — Administrative Process"

WAC 468-52, "Highway Access Management — Access Control Classification System And Standards"

WAC 468-58, "Limited Access Highways"

Right of Way Manual, M 26-01, WSDOT

Standard Plans for Road, Bridge, and Municipal Construction (Standard Plans), M 21-01, WSDOT

920.03 Definitions

access connection An access point, other than a public road/street, that permits access to or from a managed access highway on the state highway system.

approach An access point, other than a public road/street, that allows access to or from a limited access highway on the state highway system.

average weekday vehicle trip ends (AWDVTE) The estimated total of all trips entering plus all trips leaving a road approach on a weekday for the final stage of development of the property served by the road approach.

intersection at grade The general area where a state highway or ramp terminal is met or crossed at a common grade or elevation by another state highway, a county road, or a city street.

legal road approach A road approach that complies with the requirements of Chapter 1430 for limited access facilities and Chapter 1435 for managed access facilities.

limited access highway All highways where the rights of direct access to or from abutting lands have been acquired from the abutting land owners.

managed access highway All highways where the rights of direct access to or from abutting lands have not been acquired from the abutting land owners.

nonconforming road approach A road approach that does not meet current requirements for location, quantity, spacing, sight distance, or geometric elements.

road approach A road or driveway providing private access to or from the state highway system.

road approach design template The design geometric standards for a road approach based on the usage, types of vehicles, and the traffic volume.

920.04 Design Considerations

Review all existing road approaches within the limits of a project to verify their legality. (See Chapters 1420, 1430, and 1435.) Restore or replace all legal road approaches impacted by a highway project. Evaluate road approaches that will not comply with access control requirements for ways to bring them into compliance.

New road approaches or upgrades to existing road approaches, requested by the property owner, may be included in the project at the expense of the property owner.

Design road approaches at transit facilities in accordance with Chapter 1060.

920.05 Road Approach Design Template

The road approach design template is dependent upon the usage, types of vehicles, and the traffic volume.

Figure 920-1 lists the road approach design templates, the road approach usage, and the design vehicle that Figures 920-3 through 5 provide for. When a larger design vehicle is required, use the turning path templates in Chapter 910, or from another source, to determine what adjustments to make.

Design Template	Property Usage	Design Vehicle
A	Residential	P
B	Farm	SU & BUS
C	Utility and special use	SU & BUS
D	Commercial	varies*
* See Figure 920-5.		

Road Approach Design Templates
Figure 920-1

The road approach templates are divided by allowable access movement. Figure 920-2 gives the movements allowed for each road approach access design.

Category	Access Allowed
1	Full access
2	Right in right out
3	Right in only
4	Right out only

Road Approach Access Category
Figure 920-2

When designating a road approach template include the access category. For example, a residential road approach with full access would be Design Template A1.

(1) Road Approach Design Template A – Residential

A Road Approach Design Template A is used for a noncommercial road approach to provide access for residential units. It is designed for low traffic volumes of primarily passenger cars. Design road approaches to fit the conditions within the limits shown in Figure 920-3.

(a) **Limited Access Facilities** Use Road Approach Design Template A when a Type A approach is specified.

(b) **Managed Access Facilities** Use Road Approach Design Template A for connections to single family residences, duplexes, or other small multifamily complexes. When the connection provides access to more than 10 dwelling units, consider a commercial road approach (Design Template D).

(2) Road Approach Design Template B – Farm

A Road Approach Design Template B is used for a road approach for the normal operation of a farm, but not for retail marketing. It is designed for the larger vehicles normal for farm operations. If there is a predominance of semitrailer traffic, modify the design to accommodate larger vehicles. Design road approaches to fit the conditions within the limits shown in Figure 920-4.

(a) **Limited Access Facilities** Use Road Approach Design Template B when a Type B approach is specified.

(b) **Managed Access Facilities** Use Road Approach Design Template B for connections to farms and other agricultural facilities that do not include retail marketing.

(3) Road Approach Design Template C – Utility and Special Use

A Road Approach Design Template C is used to provide access to facilities owned by a utility for the purpose of maintenance of that facility and operation of the utility. Template C may also be used for other special agreed upon uses. If there is a predominance of semitrailer traffic, modify the design to accommodate larger vehicles. Design road approaches to fit the conditions within the limits shown in Figure 920-4.

(a) **Limited Access Facilities** Use Road Approach Design Template C when a Type C or Type F approach is specified.

(b) **Managed Access Facilities** Use Road Approach Design Template C for connections to utility facilities, wireless communication sites, and other locations where an agreement has been reached for a special purpose.

(4) Road Approach Design Template D – Commercial

A Road Approach Design Template D is used for all commercial road approaches to provide access to businesses, farms with retail marketing, and other high volume road approaches.

Determine the predominant type of vehicle and design the commercial road approach in accordance with Figure 920-5. If the width of the frontage precludes such a road approach, use the turning path templates in Chapter 910, or from another source, to determine what adjustments may be made to provide safe and efficient access and to avoid encroachment upon the frontage of abutting property.

Commercial road approaches must not cause undue interference or hazard to the free movement of highway traffic and, when not joint use road approaches, they must not infringe on the frontage of adjoining property.

Where traffic volumes are heavy, such as for a shopping center or an industrial park, design the road approach as an intersection. (See Chapter 910.)

(a) **Limited Access Facilities** Use Road Approach Design Template D when a Type D approach is specified.

(b) **Managed Access Facilities** Use Road Approach Design Template D for businesses, farms with retail marketing, and other high volume road approaches.

920.06 Sight Distance

The driver of a vehicle entering a roadway from a road approach needs obstruction-free sight triangles in order to see enough of the roadway to safely enter before an approaching vehicle can reach the road approach.

Locate the road approach where the sight distances shown on Figure 920-6 are available.

920.07 Road Approach Location

Locate road approaches as determined in Chapter 1430 for limited access facilities and Chapter 1435 for managed access facilities.

920.08 Drainage Requirements

In a roadway section with a drainage ditch, a culvert pipe is placed under the road approach. The road approach is graded as shown in Figure 920-5. Be careful that roadway runoff is not a problem.

Design foreslopes not steeper than 6H:1V. Bevel the culvert ends in accordance with Chapter 700.

Locate culverts as far from the traveled way as possible. Minimum distances are shown in Figures 920-3 through 5.

A turnpike section (a standard roadway section with a shallow V-shaped paved gutter at the shoulder edge) may be used. Consider continuing the turnpike section throughout the area between the shoulder and the backslope. In the profile controls on Figure 920-5, if the grade from the edge of shoulder to the right of way line is a flat or minus grade and roadway runoff is a consideration, curb may be placed as shown.

Road approaches and related areas must be constructed so they do not impair drainage within the right of way or alter the stability of the roadway subgrade.

920.09 Procedures

Verify the legality of all road approaches. (See Chapters 1420, 1430, and 1435.) Show on a plan or a list the location and template, for all road approaches. Where road approaches are to be included in a project, consider location and function as early as possible, preferably in the preliminary planning stage.

920.10 Documentation

A list of the documents that are to be preserved [in the Design Documentation Package (DDP) or the Project File (PF)] is on the following web site: http//www.wsdot.wa.gov/eesc/design/projectdev/

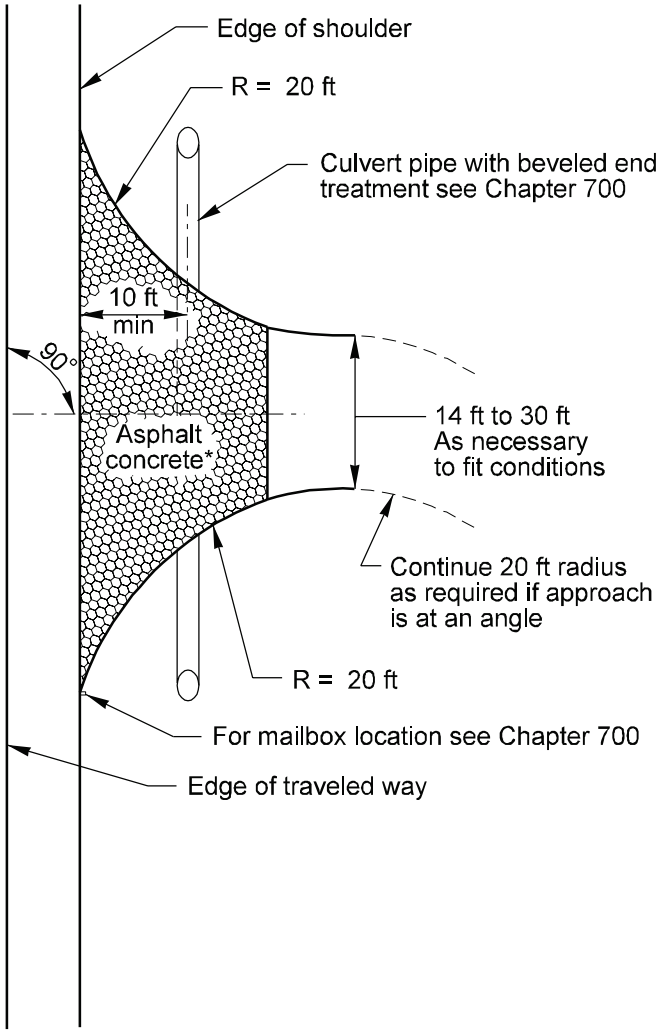

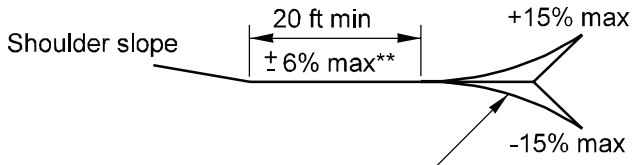

Vertical curves not to exceed a 3 1/4 inch hump or a 2 inch depression in a 10 ft chord.

*When the travel lanes are bituminous, a similar type may be used on the approaches.

** ± 8% max difference from shoulder slope.

Road Approach Design Template A1

Figure 920-3

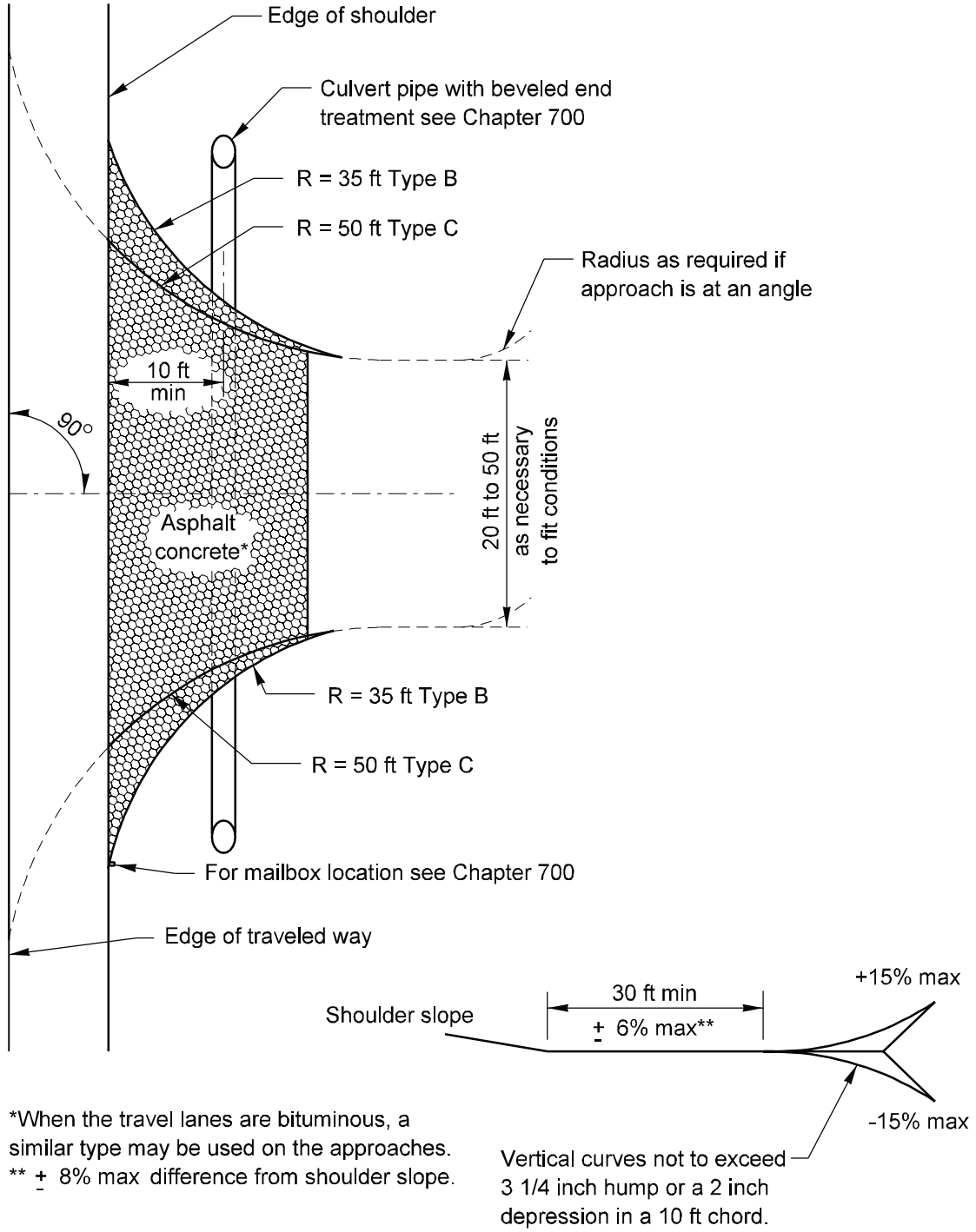

*When the travel lanes are bituminous, a similar type may be used on the approaches.
** ± 8% max difference from shoulder slope.

Road Approach Design Templates B1 and C1
Figure 920-4

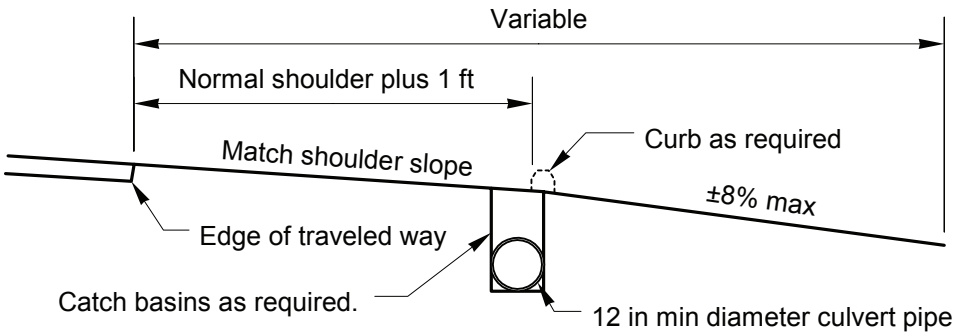

Profile Controls

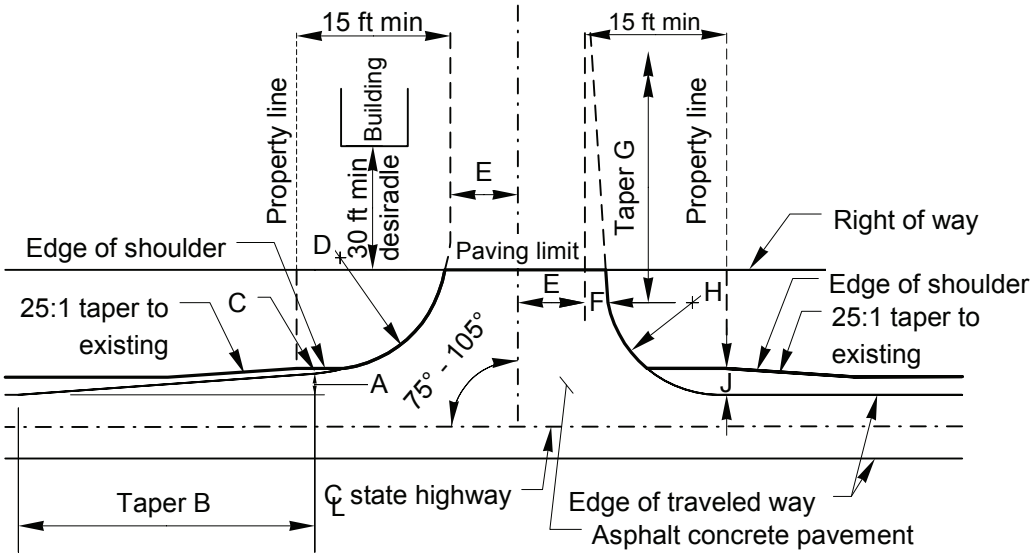

Condition	A	B	C	D	E	F	G	H	J
Primary SU and less	—	—	(2)	30	15	—	—	30	(2)
Primary combination Vehicle WB 40	—	—	(2)	65	15	—	—	55	(2)
	4	25	(3)	50	15	7	25	45	(2)
Primary combination Vehicle WB 50 and doubles	—	—	(2)	70	20	—	—	50	(2)
	4	25	(3)	55	20	—	—	50	(2)

Notes:

(1) All values in ft.

(2) Normal shoulder width. (See Chapter 440.)

(3) Normal shoulder width less A.

(4) For larger vehicles, use turning templates. (See Chapter 910.)

(5) Vertical curves between the shoulder slope and the road approach grade not to exceed a 3¼ in hump or a 2 in depression in a 10 ft cord.

Road Approach Design Template D1

Figure 920-5

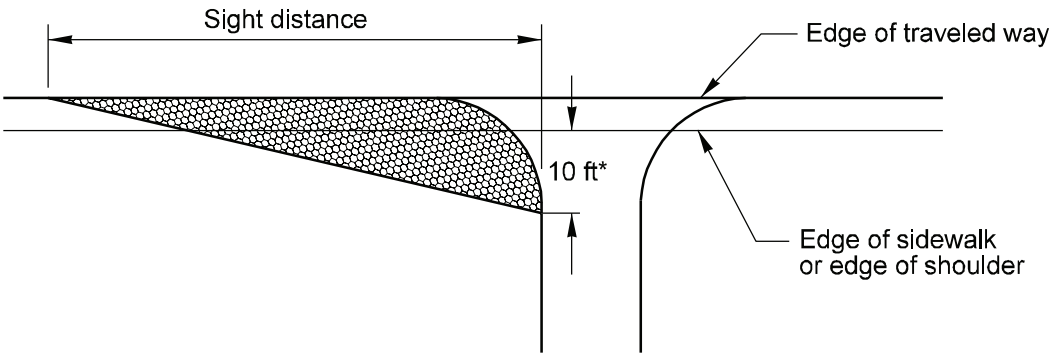

* Not to exceed 18 ft from the edge of traveled way.

Posted Speed Limit (mph)	25	30	35	40	50	60	70
AWDVTE 100 or less	155	200	230	295	395	525	625
AWDVTE 100 to 1500	155	200	250	305	425	570	645
Road Approach Sight Distance (ft)							

These distances require an approaching vehicle to reduce speed or stop to prevent a collision.

Design road approach sight distance for road approaches with AWDVTE over 1500 as an intersection, see Chapter 910.

Provide decision sight distance (Chapter 650) for through traffic at all utility and special use road approaches on facilities with full access control.

For road approaches where left turns are not allowed, a sight triangle need only be provided to the left, as shown.

For road approaches where left turns are allowed, provide a sight triangle to the right in addition to the one to the left. The sight distance to the right is measured along the center line of the roadway.

For additional information on calculating the sight triangle, see Chapter 910.

Road Approach Sight Distance
Figure 920-6

Chapter 1030 Safety Rest Areas and Traveler Services

1030.01 General
1030.02 References
1030.03 Documentation

1030.01 General

The Washington State Department of Transportation (WSDOT) has developed a statewide system of traveler services on Interstate highways and state routes. This system includes safety rest areas, roadside parks, points of interest, and traveler information centers. These traveler services provide the opportunity for rest and orientation. Benefits include improved safety, reduced driver fatigue, refuge from adverse driving conditions, and increased tourism.

Traveler services are planned and designed by a multidisciplinary team lead through the Safety Rest Area Program Planner in HQ Maintenance and Operations.

Safety rest areas and roadside parks are spaced approximately every 60 miles on the National Highway System and on Scenic and Recreational Highways. Use the *Safety Rest Area and Roadside Park Master Plan* as a guide when selecting a site location.

See the *Roadside Manual*, Division 6, for detailed information on planning, design, construction, and maintenance of safety rest areas and other traveler services.

1030.02 References

42 United States Code (USC) Section 12101et seq. Americans with Disabilities Act of 1990

23 Code of Federal Regulations (CFR) 1.23 Rights-of-Way

23 CFR 752 Landscape and roadside development

Revised Code of Washington (RCW) 46.16.063 Additional fee for recreational vehicles

RCW 46.68.170 RV account — Use for sanitary disposal systems

RCW 47.06.040 State-wide multimodal transportation plan

RCW 47.28.030 Contracts — State Forces

RCW 47.38 Roadside Areas — Safety Rest Areas

RCW 47.39 Scenic and Recreational Highway Act of 1967

Washington Administrative Code (WAC) 51-40 Uniform Building Code Requirements for Barrier-Free Accessibility

Roadside Manual, M 25-30, WSDOT

Highway Runoff Manual, M 31-16, WSDOT

Highway System Plan, WSDOT

Hydraulics Manual, M 23-03, WSDOT

Maintenance Manual, M 51-01, WSDOT

Right of Way Manual, M 26-01, WSDOT

Roadside Classification Plan, M 25-31, WSDOT

Traffic Manual, M 51-02, WSDOT

Safety Rest Area and Roadside Park Master Plan

Manual on Uniform Traffic Control Devices USDOT, Washington DC, including the *Washington State Modifications to the MUTCD,* WSDOT (MUTCD) http://www.wsdot.wa.gov/biz/trafficoperations/mutcd.htm

"Safety Rest Areas: Planning, Location and Design," USDOT, FHWA, 1981

1030.03 Documentation

A list of documents that are to be preserved [in the Design Documentation Package (DDP) or the Project File (PF)] is on the following website: http://www.wsdot.wa.gov/eesc/design/projectdev/

	Variables (feet)				
Ø	A	B	C	D	E
30°	85	30	50	30	100
35°	90	35	55	35	105
40°	95	35	60	35	110
45°	100	45	65	45	115

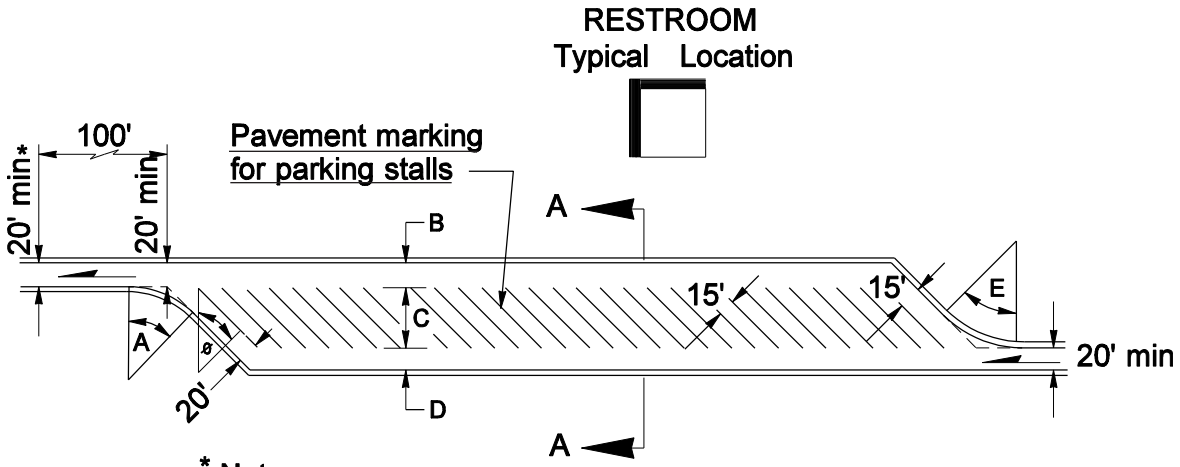

* Note:
If exit ramp is tangent or has curve radii greater than 1000', this width may be reduced to 14'.

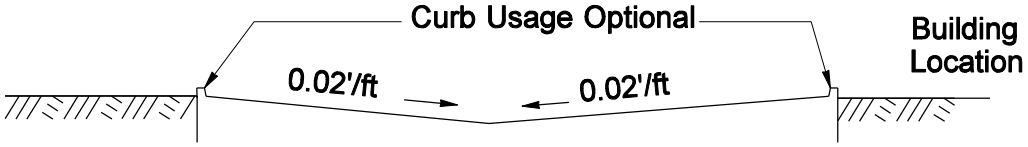

SECTION A-A

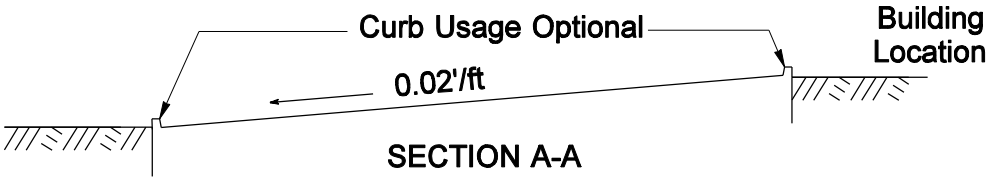

SECTION A-A
Alternate

Typical Truck Storage
Figure 1030-1

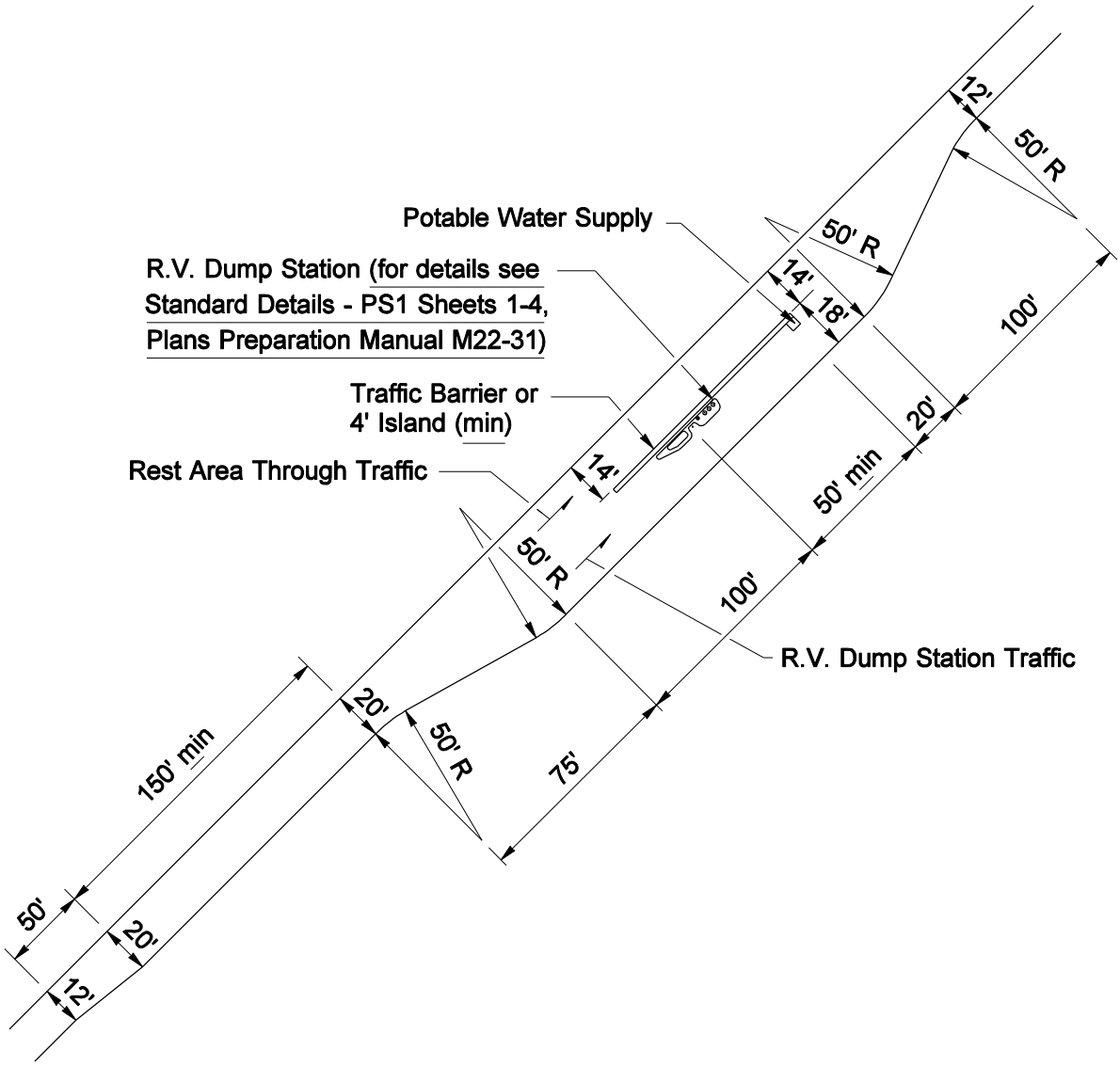

Typical Single RV Dump Station Layout
Figure 1030-2

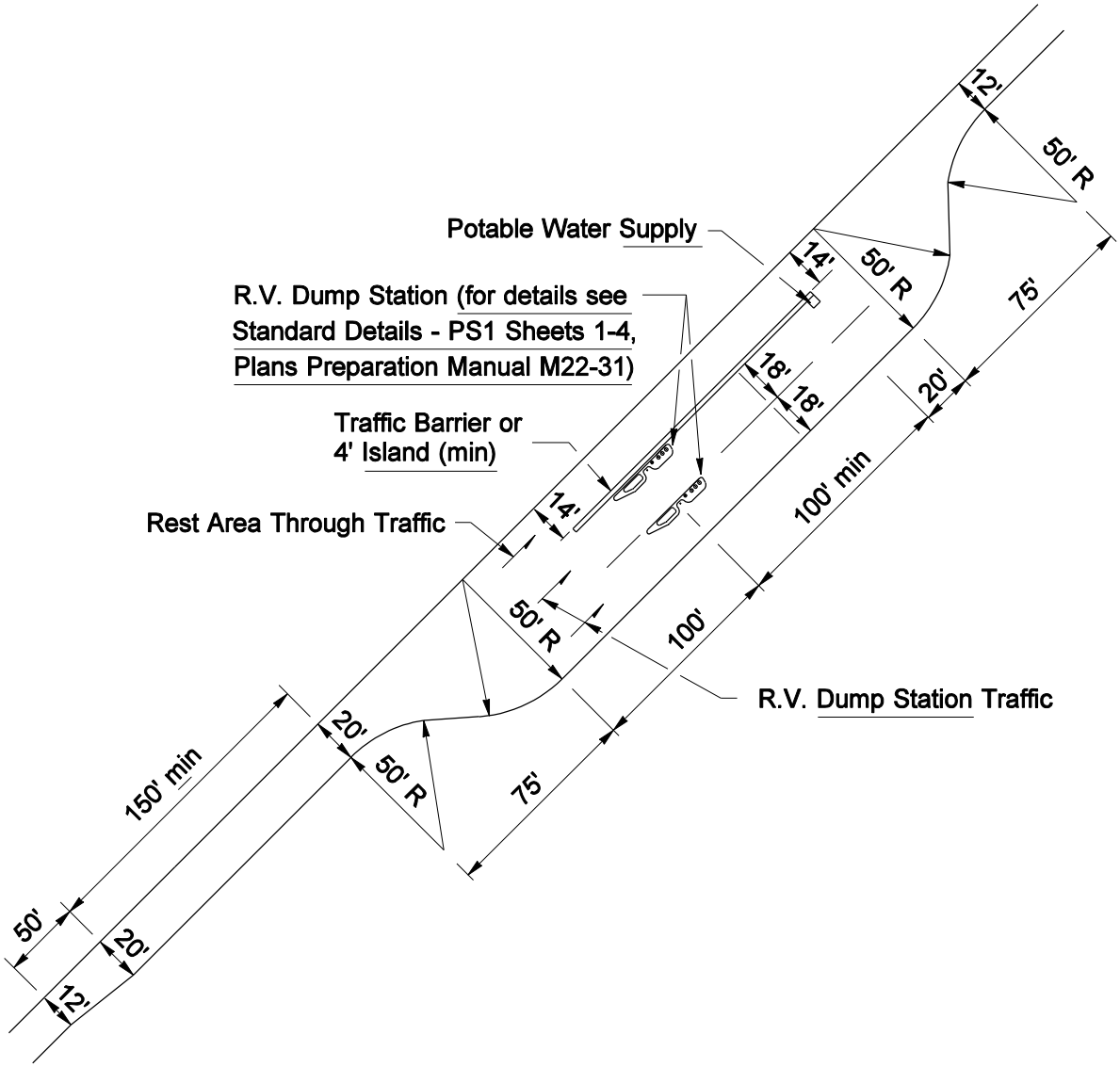

Typical Two RV Dump Station Layout
Figure 1030-3

Chapter 1110 Site Data for Structures

1110.01 General
1110.02 References
1110.03 Required Data for All Structures
1110.04 Additional Data for Waterway Crossings
1110.05 Additional Data for Grade Separations
1110.06 Additional Data for Widenings
1110.07 Documentation

1110.01 General

The Headquarters (HQ) Bridge and Structures Office provides structural design services to the regions. This chapter describes the information required by the HQ Bridge and Structures Office to perform this function.

1110.02 References

Bridge Design Manual, M 23-50, WSDOT

Plans Preparation Manual, M 22-31, WSDOT

1110.03 Required Data for All Structures

Submit the bridge site data to the HQ Bridge and Structures Office. Provide a cover memo that gives general information on the project, describes the attachments, and transmits the forms and data included in the submittal. Submit site data as a CAD file, supplemental drawings, and a report. See Figure 1110-1 for items to include in a bridge site data submittal. Direct any questions relating to the preparation of bridge site data to the HQ Bridge and Structures Office. The *Bridge Design Manual* shows examples of required WSDOT forms.

(1) CAD Files and Supplemental Drawings

The HQ Bridge and Structures Office uses the microGDS Computer-Aided Drafting (CAD) system. CAD files prepared for use as bridge site data will be accepted in standard DGN, DXF, or DWG format.

Prepare plan, profile, and section drawings for all structures. Include copies of the CAD site data and supplemental drawings in the reduced plan sheet format with the submittal.

Use a complete and separate CAD file for each structure. See the *Plans Preparation Manual* for information regarding drawing levels and use the Bridge and Structures format. The *Bridge Design Manual* contains examples of completed Bridge Preliminary Plans. These plans show examples of the line styles and drawing format for site data in CAD.

Include the following information in the CAD files or in the supplemental drawings:

(a) **Plan**

- Drawing scales for the bridge site plan:

Length of Structure	Scale
20 ft to 100 ft	1″=10′
100 ft to 500 ft	1″=20′
500 ft to 800 ft	1″=30′
800 ft to 1,100 ft	1″=40′
more than 1,100 ft	1″=50′

  The bridge site data is used to prepare the bridge layout plan which is to be used in the contract plans. The drawing scales shown are for the full-sized contract plan format and are a guide only. Consider the width and general alignment of the structure when selecting the scale. For structures on curved alignments or where the bridge width is nearly equal to or greater than the bridge length, consult the HQ Bridge and Structures Office for an appropriate plan scale.

- Vertical and horizontal datum control. See Chapters 1440 and 1450.
- Contours of the existing ground surface. Use intervals of 1, 2, 5, or 10 ft depending on terrain and plan scale. The typical contour interval is 2 ft. Use 1 ft intervals for flat terrain. Use 5 ft or 10 ft intervals for steep terrain or small scales. Show contours beneath an existing or proposed structure and beneath the water surface of any waterway.
- Alignment of the proposed highway and traffic channelization in the vicinity.
- Location by section, township, and range.

- Type, size, and location of all existing or proposed sewers, telephone and power lines, water lines, gas lines, traffic barriers, culverts, bridges, buildings, and walls.
- Location of right of way lines and easement lines.
- Distance and direction to nearest towns or interchanges along the main alignment in each direction.
- Location of all roads, streets, and detours.
- Stage construction plan and alignment.
- Type, size, and location of all existing and proposed sign structures, light standards, and associated conduits and junction boxes. Provide proposed signing and lighting items when the information becomes available.
- Location of existing and proposed drainage.
- Horizontal curve data. Include coordinates for all control points.

(b) **Profile**

- Profile view showing the grade line of the proposed or existing alignment and the existing ground line along the alignment line.
- Vertical curve data.
- Superelevation transition diagram.

(c) **Section**

- Roadway sections on the bridge and at the bridge approaches. Indicate the lane and shoulder widths, cross slopes and side slopes, ditch dimensions, and traffic barrier requirements.
- Stage construction roadway geometrics with the minimum lane and roadway widths specified.

(2) Report

Submit DOT Form 235-002, "Bridge Site Data-General." Supplement the CAD drawings with the following items:

- Vicinity maps
- Class of highway
- Design speed
- Special requirements for replacing or relocating utility facilities
- ADT and DHV counts
- Truck traffic percentage
- Requirements for road or street maintenance during construction

(3) Video and Photographs

Submit a VHS video of the site. Show all the general features of the site and details of existing structures. Scan the area slowly, spending extra time showing existing bridge pier details and end slopes. A "voice over" narrative on the video is necessary for orientation.

Color photographs of the structure site are desirable. Include detailed photographs of existing abutments, piers, end slopes, and other pertinent details for widenings, bridge replacements, or sites with existing structures.

1110.04 Additional Data for Waterway Crossings

Coordinate with the Headquarters (HQ) Hydraulics Branch and supplement the bridge site data for all waterway crossings with the DOT Form 235-001, "Bridge Site Data for Stream Crossings" and the following:

- Show riprap or other slope protection requirements at the bridge site (type, plan limits, and cross section) as determined by the HQ Hydraulics Branch.
- Show a profile of the waterway. The extent will be determined by the HQ Hydraulics Branch.
- Show cross sections of the waterway. The extent will be determined by the HQ Hydraulics Branch.

The requirements for waterway profile and cross sections may be less stringent if the HQ Hydraulics Branch has sufficient documentation (FEMA reports, for example) to make a determination. Contact the HQ Hydraulics Branch to verify the extent of the information needed. Coordinate any rechannelization of the waterway with the HQ Hydraulics Branch.

Many waterway crossings require a permit from the U.S. Coast Guard. (See Chapter 240.) Generally, ocean tide influenced waterways and waterways used for commercial navigation require a Coast Guard permit. These structures require the following additional information:

- Names and addresses of the landowners adjacent to the bridge site.
- Quantity of new embankment material within the floodway. This quantity denotes, in cubic yards, the material below normal high water and the material above normal high water.

Some waterways may qualify for an exemption from Coast Guard permit requirements if certain conditions are met. See the *Bridge Design Manual*. If the waterway crossing appears to satisfy these conditions, then submit a statement explaining why this project is exempt from a Coast Guard permit. Attach this exemption statement to the Environmental Classification Summary prepared for the project and submit it to the HQ Design Office for processing to FHWA.

The region is responsible for coordination with the HQ Bridge and Structures Office, U. S. Army Corps of Engineers, and U. S. Coast Guard for waterways that may qualify for a permit exemption. The HQ Bridge and Structures Office is responsible for coordination with the U.S. Coast Guard for waterways that require a permit.

1110.05 Additional Data for Grade Separations

(1) Highway-Railroad Separation

Supplement bridge site data for structures involving railroads with the following:

(a) **Plan**

- Alignment of all existing and proposed railroad tracks.
- Center-to-center spacing of all tracks.
- Angle, station, and coordinates of all intersections between the highway alignment and each track.
- Location of railroad right of way lines.
- Horizontal curve data. Include coordinates for all circular and spiral curve control points.

(b) **Profile**

- For proposed railroad tracks; profile, vertical curve, and superelevation data for each track.
- For existing railroad tracks, elevations accurate to 0.1 ft taken at 10-ft intervals along the top of the highest rail of each track. Provide elevations to 50 ft beyond the extreme outside limits of the existing or proposed structure. Tabulate elevations in a format acceptable to the HQ Bridge and Structures Office.

(2) Highway-Highway Separation

Supplement bridge site data for structures involving other highways by the following:

(a) **Plan**

- Alignment of all existing and proposed highways, streets, and roads.
- Angle, station, and coordinates of all intersections between all crossing alignments.
- Horizontal curve data. Include coordinates for all curve control points.

(b) **Profile**

- For proposed highways; profile, vertical curve, and superelevation data for each.
- For existing highways; elevations accurate to 0.1 ft taken at intervals of 10 ft along the center line or crown line and each edge of shoulder, for each alignment, to define the existing roadway cross slopes. Provide elevations to 50 ft beyond the extreme outside limits of the existing or proposed structure. Tabulate elevations in a format acceptable to the HQ Bridge and Structures Office format.

(c) **Section**

- Roadway sections of each undercrossing roadway indicating the lane and shoulder widths, cross slopes and side slopes, ditch dimensions, and traffic barrier requirements.
- Falsework or construction opening requirements. Specify minimum vertical clearances, lane widths, and shy distances.

1110.06 Additional Data for Widenings

Bridge rehabilitations and modifications that require new substructure are defined as bridge widenings.

Supplement bridge site data for structures involving bridge widenings by the following:

- Submit DOT Form 235-002A, "Supplemental Bridge Site Data-Rehabilitation/Modification."

(a) **Plan**

- Stations for existing back of pavement seats, expansion joints, and pier center lines based on field measurement along the survey line and each curb line.
- Locations of existing bridge drains. Indicate whether these drains are to remain in use or be plugged.

(b) **Profile**

- Elevations accurate to 0.1 ft taken at intervals of 10 ft along the curb line of the side of the structure being widened. Pair these elevations with corresponding elevations (same station) taken along the crown line or an offset distance (minimum of 10 ft from the curb line). This information will be used to establish the cross slope of the existing bridge. Tabulate elevations in a format acceptable to the HQ Bridge and Structures Office.

  Take these elevations at the level of the concrete roadway deck. For bridges with latex modified or microsilica modified concrete overlay, elevations at the top of the overlay will be sufficient. For bridges with a nonstructural overlay, such as an asphalt concrete overlay, take elevations at the level of the concrete roadway deck. For skewed bridges, take elevations along the crown line or at an offset distance (10 ft minimum from the curb line) on the approach roadway for a sufficient distance to enable a cross slope to be established for the skewed corners of the bridge.

1110.07 Documentation

A list of documents that are to be preserved [in the Design Documentation Package (DDP) or the Project File (PF)] is on the following website: http://www.wsdot.wa.gov/eesc/design/projectdev/

Review Chapter 1110 of the *Design Manual* for further information and description of the items listed below.

PLAN (In CAD file.)

_____ Survey Lines and Station Ticks
_____ Survey Line Intersection Angles
_____ Survey Line Intersection Stations
_____ Survey Line Bearings
_____ Roadway and Median Widths
_____ Lane and Shoulder Widths
_____ Sidewalk Width
_____ Connection/Widening for Traffic Barrier
_____ Profile Grade and Pivot Point
_____ Roadway Superelevation Rate (if constant)
_____ Lane Taper and Channelization Data
_____ Traffic Arrows
_____ Mileage to Towns Along Main Line
_____ Existing Drainage Structures
_____ Existing Utilities — Type/Size/Location
_____ New Utilities — Type/Size/Location
_____ Light standards, Junction boxes, Conduits
_____ Bridge Mounted Signs and Supports
_____ Contours
_____ Bottom of Ditches
_____ Test Holes (if available)
_____ Riprap Limits
_____ Stream Flow Arrow
_____ R/W Lines and/or Easement Lines
_____ Exist. Bridge No. (to be removed, widened)
_____ Section, Township, Range
_____ City or Town
_____ North Arrow
_____ SR Number
_____ Scale

TABLES (In tabular format in CAD file.)

_____ Curb Line Elevations at Top of Existing Bridge Deck
_____ Undercrossing Roadway Existing Elevations
_____ Undercrossing Railroad Existing Elevations
_____ Curve Data

OTHER SITE DATA (May be in CAD or may be on supplemental sheets or drawings.)

_____ Superelevation Diagrams
_____ End Slope Rate
_____ Profile Grade Vertical Curves
_____ Coast Guard Permit Status
_____ Railroad Agreement Status
_____ Highway Classification
_____ Design Speed
_____ ADT, DHV, and % Trucks

FORMS (Information noted on the form or attached on supplemental sheets or drawings.)

Bridge Site Data General

_____ Slope Protection
_____ Pedestrian Barrier/Pedestrian Rail Height Requirements
_____ Construction/Falsework Openings
_____ Stage Construction Channelization Plans
_____ Bridge (before/with/after) Approach Fills
_____ Datum
_____ Video of Site
_____ Photographs of Site
_____ Control Section
_____ Project Number
_____ Region Number
_____ Highway Section

Bridge Site Data for Stream Crossings

_____ Water Surface Elevations and Flow Data
_____ Riprap Cross Section Detail

Supplemental Bridge Site Data-Rehabilitation/Modification

BRIDGE, CROSSROAD, AND APPROACH ROADWAY CROSS SECTIONS (May be in CAD or separate drawings.)

_____ Bridge Roadway Width
_____ Lane and Shoulder Widths
_____ Profile Grade and Pivot Point
_____ Superelevation Rate
_____ Survey Line
_____ PB/Pedestrian Rail Dimensions
_____ Stage Construction Lane Orientations
_____ Locations of Temporary Barrier
_____ Conduits/Utilities in Bridge
_____ Location and Depth of Ditches
_____ Shoulder Widening for Barrier
_____ Side Slope Rate

Bridge Site Data Check List
Figure 1110-1

Chapter 1310 Contour Grading

1310.01 General
1310.02 References
1310.03 Procedures
1310.04 Recommendations
1310.05 Documentation

1310.01 General

Contour grading is an important element in achieving operational, environmental and visual functions.

Contour grading plans are required when profiles and cross sections do not provide a complete picture. Examples include stream channel changes, interchanges, noise abatement berms, wetland mitigation sites, and detention/retention ponds. Contour grading plans show the subtle changes in grading that occur between cross sections and can allow for finer grading so that the constructed earthform blends smoothly into the surrounding landscape. While engineered slopes define grades to meet engineering requirements, contours can be used to define a finished grade that will blend the facility into the surrounding landscape and meet the requirements of the *Roadside Classification Plan*.

A detention/retention pond can be designed and constructed to appear as if it were naturally formed. Contour grading plans facilitate this kind of earth sculpting. In addition, contour grading plans can be critical to wetland mitigation sites where inaccurate grading can leave a proposed mitigation site without access to a water source.

See the *Roadside Manual* for more detailed information on grading for roadsides.

1310.02 References

Roadside Manual, M 25-30, WSDOT

Roadside Classification Plan, M 25-31, WSDOT

Standard Plans for Road, Bridge and Municipal Construction (Standard Plans), M 21-01, WSDOT

1310.03 Procedures

See Chapter 330 for design approval levels.

When contour grading plans are needed, consult the regional, or Headquarters (HQ) Roadside & Site Development Unit.

Submit plans for contour grading on structures (such as lids) to the HQ Bridge and Structures Office for approval.

1310.04 Recommendations

Consider the following factors when developing a contour grading plan:

- Balancing of cut and fill within project limits.
- Preservation of existing desirable vegetation.
- Preservation of existing topsoil.
- Vehicle recovery areas.
- Sight distance.
- Pedestrian safety and security.
- Impacts to groundwater and surface water both on and off the right of way, including wetlands.
- Slope angle and potential soil erosion.
- Slope rounding.
- Drainage (including detention/retention functions).
- Surrounding landscape.
- Visual factors (a form that blends with the adjacent landforms).
- Grading construction cost.
- On slopes steeper than 2H to 1V it may be difficult to stabilize and establish vegetation.
- Soil properties and angle of repose.
- Maintenance access to drainage and traffic operational features.

- Maintenance requirements for slopes (slopes steeper than 3H:1V cannot be mowed).
- Access along fence line or noise walls, if necessary.
- Maximum allowable cut/fill next to a structure (minimum cover over a footing, maximum fill behind a wall or next to a pier).

Use a known stationing point or baseline as a starting point in drawing contours.

Recommended contour interval:

- 1 ft for highway plan drawings.
- 1 ft contour intervals for noise wall berms, and pedestrian related facilities.
- 0.5 ft contour intervals for wetland mitigation sites, stream mitigation sites, and wetland bank sites. Include two or more cross-sections done at a vertical exaggeration sufficient to communicate the design intent.

1310.05 Documentation

A list of documents that are to be preserved [in the Design Documentation Package (DDP) or the Project File (PF)] is on the following website: http://www.wsdot.wa.gov/eesc/design/projectdev/

1330.01 General
1330.02 References
1330.03 Design Considerations
1330.04 Documentation

1330.01 General

Irrigation provides additional moisture to plants during their establishment (the first 3-5 years), or in special cases, on a continuing basis. Irrigation is a high maintenance and high cost item; use only when absolutely necessary. Permanent irrigation is only used in semiurban and urban character classifications in Treatment Levels two and three. Refer to the *Roadside Classification Plan* for more information. Contact the regional Landscape Architect or the Headquarters (HQ) Roadside & Site Development Unit for assistance with irrigation plans.

1330.02 References

Roadside Classification Plan, M 25-31, WSDOT

Roadside Manual, M 25-30, WSDOT

1330.03 Design Considerations

During the project planning phase:

(a) Determine whether irrigation is necessary.

- Analyze soils
- Determine local climate conditions and microclimates
- Consult with the HQ Horticulturist, regional Landscape Architect, or HQ Roadside & Site Development Unit for regions without landscape architectural expertise for site, soil, and plant recommendations to reduce or eliminate need for irrigation
- Describe where irrigation is needed based on a functional design concept, such as "irrigation is needed to provide green lawn at a safety rest area"

(b) Determine the source of water, and its availability, rate of flow and pressure, and connection fees.

Sources of water for irrigation use include municipal water systems and water pumped from a well, pond, or stream. When selecting a source of water, consider what permits and agreements may be needed as well as the cost and feasibility of bringing water from the source to the site.

(c) Determine applicable laws and regulations regarding water, and backflow prevention.

During the design and implementation phases:

(a) Coordinate with the local water purveyor.

(b) Select durable, readily available, easy to operate, and vandal resistant irrigation components.

(c) Justify any proprietary device selections.

(d) Determine power source and connection fees.

(e) Consider the need for winterization of the irrigation system to avoid freeze damage to system components.

Use this information to document design decisions for the project file.

Show the location and type of water source on the irrigation plan.

For more detailed information on irrigation systems and irrigation documentation, see the *Roadside Manual*.

1330.04 Documentation

A list of documents that are to be preserved [in the Design Documentation Package (DDP) or the Project File (PF)] is on the following website: http://www.wsdot.wa.gov/eesc/design/projectdev/

1350.01 General
1350.02 References
1350.03 Uses
1350.04 Design Responsibilities and Considerations
1350.05 Documentation

1350.01 General

Soil bioengineering is a land stabilization technology applied to disturbed sites and on slope and streambank projects. A multidisciplinary partnership is used to implement soil bioengineering techniques. Project managers initiate and design bioengineering features by employing the expertise of WSDOT hydraulic engineers, geotechnical engineers, engineering geologists, landscape architects, horticulturists, biologists, water quality specialists, environmental planners, and others. Soil bioengineering for slope stabilization provides additional environmental benefits such as habitat enhancement and water quality improvement.

Include consideration of slope geometry, climate, water regime, soil properties, and surrounding vegetation in soil bioengineering proposals. Applications of soil bioengineering are divided into three general categories: erosion control, streambank or shoreline stabilization, and upland slope stabilization. Refer to manuals according to the related discipline.

1350.02 References

For more detailed information, see:

Design Manual chapters, M 21-01, WSDOT:

1300 Roadside Development

510 Investigation of Soils, Rock, and Surfacing Materials

640 Geometric Cross Section

1130 Retaining Walls

1210 Hydraulics

Geotechnical Guidance — see geotechnical report for slope/soil stability. If further assistance is needed, contact Regional Materials Engineer.

Hydraulics Manual, M 23-03, WSDOT — for hydrology criteria.

Highway Runoff Manual, M 31-16, WSDOT — for Stormwater Site Plans, Temporary Erosion and Sediment Control Plans, and best management practices.

Roadside Manual, M 25-30, WSDOT — for vegetation and site preparation criteria, plant selection, design configurations, and other related topics.

Roadside Classification Plan, M 25-31, WSDOT — policy and guidelines for roadside treatment. Contact the region's Landscape Architect Office or the HQ Roadside and Site Development Services Unit.

Environmental Procedures Manual, M 31-11, WSDOT — permits.

Internet Bioengineering Drawings, WSDOT Homepage http://www.wsdot.wa.gov/eesc/cae/design/roadside/SBwebsite/mainpage/Design/Techniques/Specdetail.html

1350.03 Uses

(1) General

Soil bioengineering combines the use of live plants or cuttings, dead plant material, and inert structural members to produce living, functioning land stabilization systems. This technique uses living plants to control and prevent soil erosion, sedimentation, and shallow slope instability. The bioengineered solution benefits from engineering techniques that use live plant material.

Soil bioengineering methods can be cost effective and a useful mitigation solution for site specific problems. Soil bioengineering is effective in erosion prevention, streambank stabilization, and some upland instabilities. Soil bioengineering, like other engineering techniques, is not applicable in all situations. Soil bioengineering

techniques may not effectively mitigate severe bridge scour, severe roadway erosion conditions, or deep seated slope instabilities. In such cases, soil bioengineering can be used in combination with other engineering techniques.

The use of native vegetation that is adapted to the conditions of the project site will increase the success of the application of soil bioengineering techniques. Over time, native vegetation will encourage the establishment of a diverse plant community and discourage undesirable and invasive plant species.

Other applications of soil bioengineering include:

- Wildlife and fisheries habitat enhancement
- Reinforcement and steepening of cut and fill slopes to limit impacts to adjacent properties and sensitive areas
- Vegetated buffer enhancement on steep slopes
- Enhancement of stormwater treatment areas and stabilization of drainage ways by providing erosion prevention and sediment control
- Site specific mitigations using standard geotechnical solutions in combination with vegetative control

(2) Erosion Prevention

Soil Bioengineering techniques can provide erosion prevention in the top soil layers. Erosion is the detachment and transport of surficial soil particles through the action of water, wind, and ice. Plant shoots and foliage diminish rainfall erosion and remove excess moisture through transpiration. Roots reinforce the soil mantle, allowing the system to grow more stable with age. Vegetative material slows down runoff and traps soil thereby reversing the effects of erosion. Refer to the *Roadside Manual* for more information.

(3) Streambank Stabilization

Soil bioengineering techniques can be used to stabilize streambanks, enhance wildlife habitat, improve water quality by controlling sediments, and protect structures. Bioengineering in the riparian zone (banks of streams, wetlands, lakes, or tidewater) requires an hydraulic study of stream characteristics and changes in stream alignment. Refer to the *Hydraulics Manual* for more information.

(4) Upland Slope Stabilization (generally less than 3 feet in depth)

Upland slope stabilization refers to the use of vegetation and plant materials to reduce or prevent soil erosion caused by wind or water on slopes not directly adjacent to riparian zones.

There are three classifications of unstable slopes:

- **Surface movement** refers to surface erosion caused by wind or water on slopes
- **Shallow-seated instability** is defined as a failure surface less than 3 ft in depth
- **Deep-seated instability** is defined as a failure surface greater than 3 ft in depth

Soil bioengineering is used for slopes that are at risk of shallow landslides, slumps, sloughing, and surface erosion.

Soil bioengineering alone is not appropriate for deep-seated landslides, but can be used in conjunction with other engineering methods to treat associated shallow instabilities.

Soil bioengineering techniques can be used to stabilize the slopes of construction sites or to repair disturbed or damaged slopes. Soil bioengineering is applied to both cut and fill slopes.

(5) Strategies

When planning for site specific soil bioengineering design, consider the factors, parameters, and design considerations/ specifications in Figure 1350-1.

Factors	Parameters	Design Considerations/ Specifications
Climate or Microclimate	Growing season Exposure/Aspect	Select suitable plants, methods and construction timing
Physical Properties of Soil	Density and compaction Permeability	Modify soil structures during construction Select suitable plants
Chemical Properties of Soil	pH Fertility Cation Exchange Capacity	Select suitable plants Add soil amendments
Water	Profile available water Water sources	Divert water during construction using drains, ditches, pipes, etc. Amend soil
Erosion Risk	Soil erodibility Rainfall erosivity Channel discharge Slope (height and angle) Wind, water, or ice	Temporary or Permanent covers Select suitable plants Reinforcement with geotextile
Geotechnical	Shear strength Slope Factor of Safety	Select suitable soil materials Structures Soil density and moisture Reinforcement with geosynthetics See (Chapter 530)

Soil Bioengineering Design
Figure 1350-1

1350.04 Design Responsibilities and Considerations

Consider the possible applications for soil bioengineering during the project definition process. Address soil bioengineering applications during the design process as part of the recommendations in the Hydraulic Report (for streambank/shoreline), Stormwater Site Plan (SSP), Geotechnical Report (for slope stabilization), and in the Environmental Documents. These reports provide design criteria and guidelines.

1350.05 Documentation

A list of documents that are to be preserved [in the Design Documentation Package (DDP) or the Project File (PF)] is on the following website: http://www.wsdot.wa.gov/eesc/design/projectdev/

1420.01 General
1420.02 References
1420.03 Definitions
1420.04 Vocabulary

1420.01 General

The Washington State Department of Transportation (WSDOT) controls access to Washington State highways (with a few exceptions) in order to preserve the safety and efficiency of these highways as well as to preserve the public investment. All Washington State highways are distinguished as being either a *limited access* highway or a *managed access* highway. Control of access is accomplished by either acquiring rights of access from abutting property owners (limited access control) or by regulating access connections to the highway (managed access control). Until limited access rights have been acquired from abutting property owners, the route is a managed access highway. Managed access permits are issued either by a local authority (city or town) or by WSDOT.

Numerous studies have shown that controlling and limiting access to highways is a cost-effective way to help maintain the safety, capacity, and functional integrity of a highway. Adding more lanes to an existing highway is expensive and frequently not possible. Controlling access to our state highways, by promoting the use of frontage roads or other existing county or city roads, and advocating the internal shared circulation within adjacent developments, is a proactive and cost-effective way to accomplish this objective.

WSDOT has been purchasing and implementing limited access control since 1951 (RCW 47.52). While this has been effective, it is an expensive way to control access to the state highway system. Adequate funding to accomplish the purchasing of access rights has not kept up with the state's continuous population growth and land use development over the years. As a result, the lawmakers of this state debated a bill in the early 1990s titled "Highway Access Management," cognizant that controlling access to the state highway system by regulation was a cost-effective means to preserve the safety and capacity of our state highway system.

In 1991, the legislature passed and the governor approved RCW 47.50, titled *Highway Access Management*. This new law directed the Department of Transportation to develop new rules to be included in the Washington Administrative Code (WAC) for those state highways not already limited access highways. The result was a new class of access control called managed access.

Chapter 1430 describes limited access highways in greater detail. Chapter 1435 describes managed access highways in greater detail.

The following references and definitions apply to Washington's access control as presented in Chapters 1430 and 1435.

1420.02 References

Revised Code of Washington (RCW) 46.61, Rules of the Road

RCW 47.17, State Highway Routes

RCW 47.32, Obstructions on Right of Way

RCW 47.50, Highway Access Management

RCW 47.52, Limited Access Facilities

Washington Administrative Code (WAC) 468-51, Highway Access Management Access Permits--Administrative Process

WAC 468-52, Highway Access Management -- Access Control Classification System and Standards

WAC 468-54, Limited Access Hearings

WAC 468-58, Limited Access Highways

Manual On Uniform Traffic Control Devices for Streets and Highways, USDOT, FHWA; including the *Washington State Modifications to the MUTCD*, WSDOT (MUTCD) http://www.wsdot.wa.gov/biz/trafficoperations/mutcd.htm

Agreements Manual, M 22-99, WSDOT

Highways Over National Forest Lands, MOU between WSDOT and USFS, 2001, M 22-50

Plans Preparation Manual, M 22-31, WSDOT

Right of Way Manual, M 26-01, WSDOT

Utilities Accommodation Policy, M 22-86, WSDOT

1420.03 Definitions

access A means of entering or leaving a public road, street, or highway with respect to abutting property or another public road, street, or highway.

access control The limiting and regulating of public and private access to Washington State's highways, as required by state law.

Access Control Tracking System A database list, related to highway route number and mile posts, that identifies either the level of limited access or the class of managed access at: http://www.wsdot.wa.gov/eesc/design/access under the RELATED SITES heading.

access connection See ***approach and access connection***

access connection permit A written authorization issued by the permitting authority for a specifically designed access connection to a managed access highway at a specific location, for a specific type and intensity of property use, and for a specific volume of traffic for the access connection, based on the final stage of the development of the applicant's property. The actual form used for this authorization is determined by the permitting authority.

access deviation A deviation (Chapter 330) that authorizes deferring or staging acquisition of limited access control, falling short of a 300 ft requirement, or allowing an existing access point to stay within 130 ft of an intersection on a limited access highway. Approval from the State Design Engineer is required. (Chapter 1430)

access hearing plan A limited access plan prepared for presentation at an access hearing.

access point Any point that allows private or public entrance to or exit from the traveled way of a state highway. (This includes "locked gate" access.)

access point spacing On a managed access highway, the distance between two adjacent access points on one side of the highway, measured along the edge of the traveled way from one center line or alignment line intersection to the next. See also *corner clearance*.

access report plan A limited access plan prepared for presentation to local governmental officials at preliminary meetings before preparation of the access hearing plan.

access rights Property rights that allow an abutting property owner to enter and leave the public roadway system.

allowed Authorized.

application for an access connection An application provided by the permitting authority to be completed by the applicant for access to a managed access highway.

approach and access connection These terms are listed under the specific access section they apply to. The first section below is for limited access highways and uses the term approach. The second section below is for managed access highways and uses the term access connection.

Approaches and access connections include any ability to leave or enter a highway other than at an intersection with another road or street.

limited access highways: approach An access point, other than a public road/street, that allows access to or from a limited access highway on the state highway system. There are five types of approaches to limited access highways that are allowed:

- ***Type A approach*** An off and on approach in legal manner, not to exceed 30 feet in width, for the sole purpose of serving a single family residence. It may be reserved by the abutting owner for specified use at a point satisfactory to the state at or between designated highway stations. This approach type is allowed on partial and modified control limited access highways.
- ***Type B approach*** An off and on approach in legal manner, not to exceed 50 feet in width, for use necessary to the normal operation of

a farm, but not for retail marketing. It may be reserved by the abutting owner for specified use at a point satisfactory to the state at or between designated highway stations. This approach type is allowed on partial and modified control limited access highways.

- ***Type C approach*** An off and on approach in legal manner, for special purpose and width to be agreed upon. It may be specified at a point satisfactory to the state at or between designated highway stations. This approach type is allowed on partial and modified control limited access highways.
- ***Type D approach*** An off and on approach in a legal manner not to exceed 50 feet in width for use necessary to the normal operation of a commercial establishment. It may be specified at a point satisfactory to the state at or between designated highway stations. This approach type is only allowed on modified control limited access highways.
- ***Type E approach*** This type is no longer allowed to be constructed because of the requirements that there be only one access point per parcel on a limited access state highway.
- ***Type F approach*** An off and on approach in a legal manner, not to exceed 30 feet in width, for the sole purpose of serving a wireless communication site. It may be specified at a point satisfactory to the state at or between designated highway stations. This approach type is only allowed on partial control limited access highways. See WAC 468-58-080(vi) for further restrictions.

managed access highways: access connection An access point, other than a public road/street, that permits access to or from a managed access highway on the state highway system. There are five types of access connection permits:

- ***conforming access connection*** A connection to a managed access highway that meets current WAC and WSDOT location, spacing, and design criteria.
- ***grand-fathered access connection*** Any connection to the state highway system that was in existence and in active use on July 1, 1990, and has not had a significant change in use.
- ***joint-use access connection*** A single connection to a managed access highway that serves two or more properties.
- ***nonconforming access connection*** A connection to a managed access highway that does not meet current WSDOT location, spacing, or design criteria pending availability of a future conforming access connection.
- ***variance access connection*** A connection to a managed access highway at a location not normally allowed by current WSDOT criteria.

managed access connection category There are four access connection permit categories for managed access connections to state highways: Category I, Category II, Category III, and Category IV. See Chapter 1435.

average annual daily traffic (AADT) The volume of traffic passing a point or segment of a highway, in both directions, during a period of time, divided by the number of days in the period and factored to represent an estimate of traffic volume for an average day of the year.

average weekday vehicle trip ends (AWDVTE) The estimated total of all trips entering plus all trips leaving the applicant's site based on the final stage of proposed development.

connection See ***approach and access connection***

contiguous parcels Two or more pieces of real property under the same ownership with one or more boundaries that touch and have similarity of use.

corner clearance On a managed access highway, the distance from an intersection of a public road or street to the nearest access connection along a managed access highway. The minimum corner clearance distance (Figure 1435-2) is measured from the closest edge of the intersecting road or street to the

closest edge of the traveled way of the access connection, measured along one side of the traveled way (through lanes). See also *access point spacing*.

DHV Design hourly volume.

E&EP Environmental and Engineering Programs, a part of the Washington State Department of Transportation (WSDOT).

easement A documented right, as a right of way, to use the property of another for designated purposes.

findings and order (F&O) A legal package containing information based on the hearing record from a limited access hearing. See Chapters 210 and 1430.

findings and order (F&O) plan A limited access plan, prepared after a limited access hearing, that is based on the hearing record.

HQ The Headquarters organization of the Washington State Department of Transportation in Olympia.

intersection An at-grade access point connecting a state highway with a road or street duly established as a public road or public street by the local governmental entity.

limited access Full, partial, or modified access control is planned and established for each corridor and then acquired as the right to limit access to each individual parcel.

limited access highway All highways listed as "Established L/A" on the Master Plan for Limited Access Highways only where the rights of direct access to or from abutting lands have been acquired from the abutting landowners.

- ***full access control*** This most restrictive level of limited access provides access, using interchanges, for selected public roads/streets only, and prohibits highway intersections at grade.
- ***partial access control*** The second most restrictive level of limited access. At-grade intersections with selected public roads are allowed and there may be some crossings and some driveway approaches at grade. Direct commercial access is not allowed.
- ***modified access control*** The least restrictive level of limited access. Characteristics are the same as for partial access control except that direct commercial access is allowed.

managed access highway Any highway not listed as "Established L/A" on the Master Plan for Limited Access Highways and any highway or portion of a highway designated on the Master Plan as "Established L/A" until such time as the limited access rights are acquired. Under managed access legislation, the property owner's access rights are regulated through an access connection permitting process.

Master Plan for Limited Access Highways A map of Washington State that shows established and planned limited access highways. More detail is given in the database list: Access Control Tracking System. (Location given above in the list's definition.)

median The portion of a divided highway separating vehicular traffic in opposite directions; not including speed change lanes, storage lanes for left- or U-turning vehicles, or two-way left-turn lanes.

median opening An opening in a continuous median for the specific purpose of allowing vehicle movement.

MOU Memorandum of Understanding. There is one MOU between the United States Forest Service and the Washington State Department of Transportation (*Highways Over National Forest Lands)* that requires the USFS to obtain a road approach permit for new access to a state highway that is crossing Forest Service land.

permit holder The abutting property owner or other legally authorized person to whom an access connection permit is issued by the permitting authority.

permitted access connection A connection for which an access connection permit has been issued by a permitting authority.

permitting authority The agency having legal authority to issue managed access connection permits: for access connections in unincorporated areas, WSDOT; for access connections within corporate limits, a city or town.

right of way (R/W) A general term denoting land or interest therein, acquired for or designated for transportation purposes. More specifically, lands that have been dedicated for public transportation purposes or land in which WSDOT, a county, or a municipality owns the fee simple title, has an easement devoted to or required for use as a public road/street and appurtenant facilities, or has established ownership by prescriptive right.

right of way and limited access plan (R/W and L/A plan) A right of way plan that also shows limited access control details.

road approach A road or driveway built to provide private access to or from the state highway system.

shoulder The portion of the highway contiguous with the traveled lanes for the accommodation of stopped vehicles for emergency use and, where allowed, for bicycles. (Chapter 1430)

state highway system All roads, streets, and highways designated as state routes in compliance with RCW 47.17.

1420.04 Vocabulary

These entries demonstrate the difference in terminology between limited access and managed access in the applicable WACs. For instance, there is nothing about *permit*, *connection*, *category*, or *class* in the limited access vocabulary and, likewise, nothing about *approach* or *type* in the managed access vocabulary.

Chapter 920's vocabulary uses *road approach* in a generic way, unrelated to WAC legalese, and makes no distinction related to access control.

The entries shown on Figure 1420-1 are examples of suitable wording for the distinctly different types of access control in Chapters 1430 and 1435.

Access Vocabulary	
functional classification of highways intersections at grade, geometrics roundabout geometrics road approach geometrics interchange geometrics freeway access point	Chapter 440 Chapter 910 Chapter 915 Chapter 920 Chapter 940 Chapter 1425
limited access highway (Chapter 1430)	**managed access highway (Chapter 1435)**
access point (ramp) approach (street, road, driveway) road approach (street, road, driveway) driveway approach (not street or road)	access point (public or not) public access point access connection (not public)
(level of) limited access (highway) [full, partial, modified] control limited access highway	managed access highway class Class [1-5] managed access highway
Type [A, B, C, D, F] approach Type A approach = Type A road approach	Category [I-IV] access connection
allowed (policy)	permitted (a document) or allowed (policy)
	conforming access connection permit (etc.)

These words are not used in the respective chapters:

Not:	Not:
class	classification (except functional)
category	type
connection	approach
permit or permitted	

Access Vocabulary
Figure 1420-1

1430.01 General
1430.02 Achieving Limited Access
1430.03 Full Control (Most Restrictive)
1430.04 Partial Control
1430.05 Modified Control (Least Restrictive)
1430.06 Access Approaches
1430.07 Frontage Roads
1430.08 Turnbacks
1430.09 Adjacent Railroads
1430.10 Modifications to Limited Access Highways
1430.11 Documentation

1430.01 General

Chapter 1420, "Access Control," has an overview of access control and the references list and definitions of terminology for this chapter.

Requirements for the establishment of limited access highways are set forth in Revised Code of Washington (RCW) 47.52. The level of limited access is determined during the early stages of design in conformance with this chapter.

Limited access is established to preserve the safety and efficiency of specific highways and to preserve the public investment. Limited access is achieved by acquiring access rights from abutting property owners, and by selectively limiting approaches to the highway.

Highways controlled by acquiring abutting property owners' access rights are termed limited access highways and are further distinguished as having full, partial, or modified control. The number of access points per mile, spacing of interchanges or intersections, and the location of frontage roads or local road/street approaches are determined by:

- The functional classification and importance of the highway.
- The character of the traffic.
- The present and future land use.
- The environment and aesthetics.
- The highway design and operation.
- The economic considerations involved.

The Washington State Department of Transportation (WSDOT) has full jurisdiction on limited access highways, whether they are inside or outside incorporated city limits except that the Federal Highway Administration (FHWA) has jurisdiction on the Interstate System.

WSDOT keeps a record of the status of limited access control, by state route number and mile post, in the database: Access Control Tracking System at http://www.wsdot.wa.gov/eesc/design/access, under the RELATED SITES heading.

The acquisition of full, partial, or modified control is to be evaluated when right of way is being acquired on an existing highway if the route is shown on the Access Control Tracking System list as either established or planned for limited access. The matrices in Chapter 325 list several project types for which acquisition is indicated as a design element.

The cost of acquiring limited access must be evaluated considering future accident costs, future development, and the improved level of service of limited access highways. This cost will be evaluated against the cost to realign the highway in the future if limited access is not acquired at current prices.

Nothing in this chapter is to be construed to prevent acquisition of short sections of full, partial, or modified control of access.

1430.02 Achieving Limited Access

(1) Process

All Washington highways are managed access highways (Chapter 1435) except where limited access rights have been acquired. The right of way and limited access plans show the acquired limited access boundaries along the highways shown on the Access Control Tracking System as "Established Limited Access." The Tracking System list also shows the highways that are "Planned for Limited Access."

To achieve limited access:

(a) The Transportation Commission first identifies a highway as "Planned for Limited Access."

(b) To establish or revise limited access on new or existing highways, access hearings are held. See Chapter 210, "Public Involvement" regarding hearings, and Chapter 1410 for the phases of appraisal and acquisition.

- Phase 1. The region develops an access report and an access report plan for department approval and presentation to local officials. The plan notes the level of limited access proposed to be established.
- Phase 2. The region develops an access hearing plan for the State Design Engineer or designee approval and for presentation at the hearings.
- Phase 3. After the hearing, the region develops the findings and order and revises the hearing plan to become the findings and order plan. The findings and order is processed to Headquarters (HQ) Access and Hearings Unit for review and approval.

(c) The Transportation Commission or a designee adopts the findings and order and thus establishes the limits and level of limited access control to be acquired.

(d) The findings and order plan is now revised by the Right of Way Plans Office for approval by the State Design Engineer or designee as a Phase 4 final right of way and limited access plan.

(e) Real Estate Services acquires limited access rights from individual property owners based on final design decisions (diamond interchange or single point, for instance) and updates the right of way and limited access plans.

(f) These highways or portions thereof are now limited access highways and no longer fall under the managed access program.

Highways are shown in the Access Control Tracking System as "L/A" in the CURRENT ACCESS column and further listed under ESTABLISHED L/A, PLANNED L/A, or L/A ACQUIRED, based on the current right of way and limited access plans. If not listed under L/A ACQUIRED, the highway section is a managed access highway section until the acquisition is final.

(2) Access Report

The access report is developed by the region to inform local governmental officials of the proposed limited access highway, the principal access features involved, and to secure their approval. This report is not furnished to abutting property owners. Three copies of the report are submitted to the HQ Access and Hearings Unit for review and approval prior to submission to local authorities.

The access report consists of:

(a) A description of the existing and proposed highways. Data on the history of the existing highway (may include references to High Accident Locations (HAL), High Accident Corridors (HAC), Pedestrian Accident Locations (PAL), and Risk locations) and development of the proposed highway(s).

(b) Traffic analyses pertaining to the proposed highway, including available information concerning present and potential future traffic volumes of county roads and city streets crossing or severed by the proposed highway, and sources of information (origin-destination surveys, and so forth).

Traffic data developed for the design decision summary, together with counts of existing traffic directly available from state or local records, is normally adequate. Special counts of existing traffic are obtained only if circumstances indicate that the available data is inadequate or outdated.

(c) A discussion of factors affecting the design of the subject highway, including:

- Design level.
- Level of limited access, with definition.
- Roadway section.
- Interchange, grade separation, and intersection spacing.
- Pedestrian and bicycle trails or paths.

- Operational controls with emphasis on proposed fencing, the general concept of illumination, signing, and other traffic control devices.
- Locations of utilities and how affected.
- Proposed plan for landscaping and beautification, including an artist's graphic rendition or design visualization.

(d) Governmental responsibility, comprehensive planning, land use, and community service relative to the new highway.

(e) The disposition of frontage roads, city street and county road intersections, and excess right of way.

(f) An appendix containing the following:

- A glossary of engineering terms.
- A traffic volume diagram(s).
- Pages showing diagrammatically or graphically the roadway section(s), operational controls, and rest areas (if rest areas are included in the project covered by the report).
- A vicinity map.
- An access report plan and profiles for the project.

  The access report plan shows the effects of the proposed highway on the street and road system by delineating the points of public access. See the *Plans Preparation Manual* for a list of the minimum details to be shown on the plan and for a sample plan.

(h) Conferences and Reviews. Upon receipt of the Environmental and Engineering Programs (E&EP) Director's approval of Phase 1 (Figure 1410-1), the region publishes the necessary copies, submits the access report to the county and/or city officials for review and approval, and meets with all local governmental agencies involved to discuss the report. The region reviews any request for modification and submits recommendations, with copies of any correspondence or minutes relating thereto, to the HQ Access and Hearings Unit.

(3) Access Hearing Plan

The region prepares an access hearing plan to be used as an exhibit at the public hearing (Chapter 210) and forwards it to the HQ Right of Way Plans Office for review. See the *Plans Preparation Manual* for a list of data to be shown on the access hearing plan in addition to the access report plan data.

When the plan review is completed by Headquarters, the access hearing plan is placed on the E&EP Director's calendar for approval of Phase 2 authority (Figure 1410-1).

(4) Documentation

Documentation for the establishment of limited access control is in Chapter 210.

1430.03 Full Control (Most Restrictive)

(1) Introduction

Full control limited access highways provide almost complete freedom from disruption by allowing access only through interchanges at selected public roads/streets, rest areas, viewpoints, or weigh stations, and by prohibiting at-grade crossings and approaches. Gated approaches are occasionally allowed but only with approval of a request that includes an Access Point Decision Report (Chapter 1425).

At times, on state highways where full access control has been established, except Interstate, staged access acquisition may be used (subject to the approval of an access deviation) with initial acquisition as partial or modified control and with ultimate acquisition of full control planned on the highway. Where there is no practical alternative within reasonable cost, the decision to defer acquisition of limited control of access must be documented and is subject to the approval of an access deviation.

(2) Application

Terminate full control limited access sections at apparent logical points of design change. The following guidelines are to be used for the application of full control on limited access highways:

(a) **Interstate.** Full control is required on Interstate highways.

(b) **Principal Arterial.** Documentation assessing the evaluation of full control is required for principal arterial highways requiring four or more through traffic lanes within a 20-year design period unless approved for partial or modified control on existing highways by the Transportation Commission.

(c) **Minor Arterial and Collector.** Minor arterial and collector highways will not normally be considered for development to full control.

(3) Crossroads at Interchange Ramps

The extension of limited access control beyond an intersection is measured from the center line of ramps, crossroads, or parallel roads as shown in Figures 1430-1a, b, and c, from the terminus of transition tapers, Figure 1430-2, and single point urban intersections, Figure 1430-3.

(a) **Ramps.** At-grade intersections and approaches are prohibited within the full length of any off or on interchange ramp. The ramp is considered to terminate at its intersection with the local road or street.

(b) **Frontage Roads.** See Figures 1430-1a, b and c. Direct access from the highway to a local service or frontage road is allowed only via the interchange crossroad.

(c) **Interchange Crossroads.** In both urban and rural areas, full control limited access must be established and then acquired along the crossroad at an interchange for a minimum distance of 300 ft beyond the center line of the ramp or the end of the transition taper.

If a frontage road or local road is located at or within 350 ft of a ramp, limited access will be established and then acquired along the crossroad and for an additional minimum distance of 130 ft in all directions from the center line of the intersection of the crossroad and the frontage or local road (Figures 1430-1a and b) or 130 ft from the ends of the raised splitter islands of a roundabout (Figure 1430-1c).

For interchanges incorporating partial cloverleaf and/or buttonhook ramps (Figure 1430-1b), limited access is required for all portions of the crossroad and frontage roads between the ramp terminals, and for a distance of 300 ft beyond the ramp terminals. If an at-grade intersection for a local road or street is to be served directly opposite the ramp terminals, limited access will be extended additionally for a minimum of 300 ft, along that leg of the intersection.

When the intersection in question is a roundabout, see Figure 1430-1c. This shows extension of full control to be 300 ft measured from the end of the raised splitter island for an intersection with a ramp terminal and 130 ft for three legs of an at-grade intersection at or within 350 ft of a ramp terminal intersection.

Figure 1430-2 shows the terminus of transition taper.

For a single point urban interchange (SPUI) with a right or left turn “ramp branch” (separated by islands), Figure 1430-3, access control is measured (300 ft) from the intersection of the center line of the ramp branch with the center line of the nearest directional roadway.

(d) **Levels of Limited Access, Location of Approaches.** See Figures 1430-1a, b, and c and Figures 1430-2 and 3. Provide full control for 300 ft from the center line of the ramp or terminus of a transition taper.

If the economic considerations to implement full control for the full 300 ft are excessive, then provide full control for the first 130 ft and partial or modified control may be provided for the remaining 170 ft, for a total minimum distance of 300 ft of limited access. Contact the HQ Access and Hearings Unit when considering this option.

An approved access deviation is required if the limited access control falls short of 300 ft and for any access that has been allowed to remain within the first 130 ft.

Ensure that approaches are far enough away from a frontage road intersection to provide efficient intersection operation.

(4) Location of Utilities, Bus Stops, Mailboxes, and Pedestrian Crossings

(a) **Utilities.** See the *Utilities Accommodation Policy* regarding location of and access to utilities. Connecting utility lines are allowed along the outer right of way line between intermittent frontage roads.

(b) **Bus Stops.** Common carrier or school bus stops are not allowed except at:

- Railroad crossings (Chapter 930).
- Locations provided by the state on the interchanges (such as flyer stops).
- In exceptional cases, along the main roadway where pedestrian separation is available.

(c) **Mailboxes.** Mailboxes are not allowed on full control limited access highways. Mail delivery will be from frontage roads or other adjacent local roads.

(d) **Pedestrian Crossings.** At-grade pedestrian crossings are not allowed except at ramp terminal at-grade intersections.

(5) Nonmotorized Traffic

All nonmotorized traffic is prohibited on full control limited access highways. This prohibition does not apply to:

- Pedestrian separations or other facilities provided specifically for pedestrian use.
- Bicyclists using facilities provided specifically for bicycle use (separated paths).
- Bicyclists using the right-hand shoulders, except where such use has been specifically prohibited. Information pertaining to such prohibition is available from the Traffic Branch of the Operations and Maintenance Office.

(6) Trails

Pedestrian and bicycle trails are allowed, consistent with "Rules of the Road" (RCW 46.61), within the limits of full control limited access highways. When trails are allowed (with headquarters approval), they must be documented on the right of way and limited access plan. The plan shows the location of the trail and where the trail crosses limited access, and provides movement notes. See 1430.10(1).

1430.04 Partial Control

(1) Introduction

Partial control may be established, when justified, on any highway except Interstate. Partial control provides a considerable level of protection from traffic interference and protects the highway from future strip-type development.

Upon acquisition of partial control limited access rights, the number, type, and use of the access approaches of abutting property are frozen. The abutting property access rights and type of use are recorded upon the property deed. The rights and use may not be altered by the abutting property owner, the local jurisdiction, or the region. This authority resides with the State Design Engineer. See 1430.10.

(2) Application

Partial control will not normally be used in urban areas, or inside corporate limits on existing principal arterial highways where traffic volumes are less than 700 design hourly volume (DHV). Terminate limited access sections at apparent logical points of design change.

(a) **Principal Arterial.** The minimum route length is all sections not requiring full control. See 1430.03(2)(b).

Partial control is required when the estimated traffic volumes exceed 3,000 average daily traffic (ADT) within a 20-year design period on principal arterial highways requiring two through traffic lanes. For multilane principal arterial highways, see 1430.03(2)(b).

(b) **Minor Arterial.** The minimum route length is: urban, 2 miles; rural, 5 miles; and combination urban and rural, 3 miles.

Partial control is required on rural minor arterial highways on both new and existing locations, and urban minor arterial highways on new locations, requiring four or more through traffic lanes within

a 20-year design period, or requiring only two through traffic lanes where the estimated traffic volumes exceed 3,000 ADT within a 20-year design period.

Other rural minor arterial highways with only two lanes may be considered for partial control if any of the following conditions apply:

- The partial control can be acquired at a reasonable cost.
- The route connects two highways of a higher functional classification.
- The potential land development can result in numerous individual approaches, such as encountered in recreational or rapidly developing areas.
- The highway traverses publicly owned lands where partial control is desirable.

(c) **Collector (New Alignment).** Partial control is required on collector highways on new locations requiring four or more through traffic lanes in a 20-year design period.

(d) **Collector (Existing).** Existing collector highways will normally be considered for partial control limited access only when all of the following conditions apply:

- The highway serves an area that is not directly served by a higher functional classification of highway.
- Existing or planned development will result in traffic volumes significantly higher than what is required for partial control on minor arterials.
- Partial control can be established without a major impact on development of abutting properties within the constraints of established zoning at the time when the partial control is proposed.

(3) Interchanges and Intersections

(a) **Interchanges.** When an interchange occurs on a partial control limited access highway, full control applies at the interchange and interchange ramps. Refer to 1430.03(3) and see Figures 1430-1a, b, and c for required minimum lengths of access control.

(b) **Intersections.** At an at-grade intersection on a partial control limited access highway, control will be established and acquired along the crossroad for a minimum distance of 300 ft from the center line of the highway. (Figure 1430-4) If another frontage or local road is located at or within 350 ft of the at-grade intersection, limited access will be established and then acquired along the crossroad for the required minimum 300 ft and for an additional minimum distance of 130 ft in all directions from the center line of the intersection of the frontage or local road or the ends of the raised splitter islands of a roundabout (Figure 1430-5) and the crossroad. On multilane highways, measurements will be made from the center line of the nearest directional roadway.

An approved access deviation is required if the limited access control falls short of 300 ft and for any access that has been allowed to remain within the first 130 ft.

At-grade intersections with public roads are limited to the number allowed for the functional classification of highway involved as follows:

Principal Arterial - If the ADT is less than 2,000, one mile spacing (minimum), center line to center line. If over 2,000 ADT within 20 years, plan for grade separation.

Minor Arterial - If the ADT is less than 2,000, one-half mile spacing (minimum), center line to center line. If over 2,000 ADT within 20 years, plan for grade separation.

Collector - Road (or street) plus property approaches not more than six per side per mile.

However, with approval from the State Design Engineer, shorter intervals may be used where topography or other conditions restrict the design. When intersecting roads are spaced farther apart than one per mile, median crossings may be considered for U-turns in accordance with Chapter 910. Keep U-turns to a minimum, consistent with requirements for operation and maintenance of the highway.

To discourage movement in the wrong direction on multilane highways, locate private approaches 300 ft or more from an at-grade intersection. At a tee intersection, a private approach may be located directly opposite the intersection or

a minimum of 300 ft away from the intersection. Ensure that a private approach directly opposite a tee intersection cannot be mistaken for a continuation or part of the public traveled way.

(4) Access Approach

Partial control is exercised to the level that, in addition to intersections with selected public roads, some crossings and private driveways may be allowed.

(a) **Approach Types.** Partial control limited access highways allow at-grade intersections with selected public roads and private approaches using Type A, B, C, and F approaches. See Chapter 1420 for definitions of the approach types.

Type D, commercial approaches, are not allowed direct access to partial control limited access highways. Commercial access is allowed only by way of public roads.

The type of approach provided for each parcel takes into consideration present and potential land use and is based on an economic evaluation. See 1430.05(4) for a list of considerations.

(b) **Design Considerations.** The following considerations are used to determine the number and location of access approaches on partial control limited access highways.

1. Access approaches must be held to a minimum. The number is limited as follows:
   - Principal arterial - 2 per side per mile.
   - Minor arterial - 4 per side per mile.
   - Collector - 6 per side per mile including at-grade intersections
2. Approaches in excess of the number listed in 1., above, may be allowed as stage construction if approved by the State Design Engineer.
3. Approaches are not allowed for parcels that have reasonable access to other public roads unless the parcel has extensive highway frontage.
4. Relocate or close approaches located in areas where sight limitations create undue hazard.
5. Allow only one approach for each parcel except for very large ownerships, or where terrain features do not allow the property to be served by a single approach. This includes contiguous parcels under a single ownership.
6. Where possible, locate a single approach to serve two or more parcels.
7. The approved design is to provide for future development of frontage roads that will eliminate an excessive number of approaches.

(5) Location of Utilities, Bus Stops, Mailboxes, and Pedestrian Crossings

(a) **Utilities.** See the *Utilities Accommodation Policy* regarding location of and access to utilities. Connecting utility lines are allowed along the outer right of way line between intermittent frontage roads.

(b) **Bus Stops.** Bus stops for both common carriers and school buses are not allowed on either two or four-lane highways, except as follows:

- At railroad crossings per Chapter 930.
- At locations of intersections with necessary pullouts to be constructed by the state.
- Where shoulder widening has been provided for mail delivery service.
- For a designated school bus loading zone on the traveled lane or adjacent thereto which has been approved by the Department of Transportation.

Buses are not allowed to stop in the traveled lanes blocking at-grade intersections or private approaches to load or unload passengers.

School bus loading zones on partial control limited access highways must be posted with school bus loading zone signs, in accordance with the latest edition of the *Manual on Uniform Traffic Control Device*s.

(c) **Mailboxes.** Locate mailboxes on frontage roads or at intersections with the following exceptions for properties that are served by Type A or B approaches:

- Locate mailboxes on a four-lane highway only on the side of the highway on which the deeded approach is provided.
- Locate mailboxes on a two-lane highway on the side of the highway that is on the right in the direction of the mail delivery.

Whenever mailboxes are allowed on a partial control limited access highway, provide mailbox turnouts to allow mail delivery vehicles to stop clear of the through traffic lanes. See Chapter 700 for additional information concerning mailbox locations and turnouts.

(d) **Pedestrian Crossings.** Pedestrian crossings are allowed when grade-separated.

At-grade pedestrian crossings are allowed:

- At intersections only where an at-grade crossing is provided in accordance with Chapter 1025.
- On two-lane highways at mailbox locations.
- On two-lane highways not less than 100 ft from a school bus loading zone (pull out) adjacent to the traveled lane, if school district and WSDOT personnel determine that stopping in the traveled lane is hazardous.
- On two-lane highways where the school bus is stopped on the traveled lane to load or unload passengers and the required sign and signal lights are displayed.

(6) Nonmotorized Traffic

On partial control limited access highways, pedestrian and bicycle traffic is allowed, consistent with "Rules of the Road" (RCW 46.61), except when unusual safety conditions support prohibition. Information pertaining to such prohibitions is available from the Traffic Engineering Branch of the Operations and Maintenance Office.

(7) Trails

Pedestrian and bicycle trails are allowed, consistent with "Rules of the Road," on partial control limited access highways. When trails are allowed (with headquarters approval), they must be documented on the right of way and limited access plan. The plan shows the location of the trail and where the trail crosses limited access, and provides movement notes. See 1430.10(1).

1430.05 Modified Control (Least Restrictive)

(1) Introduction

Modified control is intended to prevent further deterioration in the safety and operational characteristics of existing highways by limiting the number and location of access points.

Upon acquisition of modified control limited access, the number, type, and use of access approaches of abutting property are frozen. The abutting property access rights and type of use are recorded upon the property deed. The rights and use may not be altered by the abutting property owner, the local jurisdiction, or the region. This authority resides with the State Design Engineer. See 1430.10.

(2) Application

In general, modified control is applied where some level of control is desired, but existing and potential commercial development precludes the implementation of full or partial control.

(a) **Existing Highways.** Modified control may be established and acquired on existing highways other than Interstate. Priority is given to highway segments where one or both of the following conditions apply:

- Commercial development potential is high, but most of the adjoining property remains undeveloped.
- There is a reasonable expectation that the adjoining property will be redeveloped to a more intensive land use resulting in greater traffic congestion.

(b) **Design Analysis**. Selection of highways on which modified control may be applied is based on a design analysis including the following factors:

- Traffic volumes.
- Level of service.
- Safety.
- Level of Development Plan.
- Route continuity.
- Population density.
- Local land use planning.
- Present and potential land use.
- Predicted growth rate.
- Economic analysis.

(c) **Exceptions.** Where modified control is to be established, developed commercial areas may be excepted from control when all or most of the abutting property has been developed to the extent that few, if any, additional commercial approaches will be required with full development of the area. Contact the HQ Access and Hearings Unit when considering this option. If this exception is within the limits of access control requirements, an approved access deviation is required.

(3) Intersections

At an intersection on a modified control limited access highway, access control will be established and acquired along the crossroad for a minimum distance of 130 ft from the center line of a two-lane highway, from the center line of the nearest directional roadway of a four-lane highway, or from the ends of the raised splitter islands of a roundabout (Figures 1430-5 and 6). Approaches are allowed within this area only when there is no reasonable alternative. An approved access deviation is required for any access that has been allowed to remain within the first 130 ft.

(4) Access Approach

The number and location of approaches on a highway, with modified control, must be carefully planned to provide a safe and efficient highway compatible with present and potential land use.

(a) **Approach Types.** Modified control limited access highways allow at-grade intersections with selected public roads and with private approaches using Type A, B, C, D, and F approaches. See Chapter 1420 for definitions of the approach types.

The type of approach provided for each parcel takes into consideration present and potential land use and is based on an economic evaluation that considers the following:

- Local comprehensive plans, zoning, and land use ordinances.
- Property covenants and/or agreements.
- City or county ordinances.
- The highest and best use of the property.
- Highest and best use of adjoining lands.
- Change in use by merger of adjoining ownerships.
- All other factors bearing upon proper land use of the parcel.

(b) **Design Considerations.** The following considerations are used to determine the number and location of approaches:

1. Parcels that have access to another public road or street are not normally allowed direct access to the highway.
2. Relocate or close approaches located in areas where sight limitations create undue hazard.
3. Hold the number of access approaches to a minimum. Access approaches are limited to one approach for each parcel of land, or when adjoining parcels are under one contiguous ownership.
4. Encourage joint use of access approaches where similar use of land allows.
5. Additional approaches may be allowed for future development consistent with local zoning. Once limited access has been acquired, this will require a value determination process. See 1430.10.
6. Close existing access approaches not meeting the above.

(5) Location of Utilities, Bus Stops, Mailboxes, and Pedestrian Crossings

(a) **Utilities**. See the *Utilities Accommodation Policy* regarding location of and access to utilities. Connecting utility lines are allowed along the outer right of way line between intermittent frontage roads.

(b) **Bus Stops and Pedestrian Crossings.** Bus stops and pedestrian crossings are allowed as follows:

- In rural areas, bus stops and pedestrian crossings are subject to the same restrictions as in 1430.04(5).
- In urban areas, bus stops for both commercial carriers and school buses are allowed. See Chapter 1060 for requirements.

(c) **Mailboxes.** Locate mailboxes adjacent to or opposite all authorized approaches as follows:

- Locate mailboxes on a four-lane highway only on the side of the highway on which the deeded approach is provided.
- Locate mailboxes on a two-lane highway on the side of the highway that is on the right in the direction of the mail delivery. Where mailboxes are allowed, a mailbox turnout is recommended to allow mail delivery vehicles to stop clear of the through traffic lanes. See Chapter 700 for additional information concerning mailbox locations and turnouts.

(6) Nonmotorized Traffic

Pedestrian and bicycle traffic is allowed, consistent with "Rules of the Road" (RCW 46.61), on modified control limited access highways, except where unusual safety considerations support prohibition. Information pertaining to such prohibitions is available from the Traffic Engineering Branch of the Operations and Maintenance Office.

(7) Trails

Pedestrian and bicycle trails are allowed, consistent with "Rules of the Road," on modified control limited access highways. When trails are allowed, they must be documented on the right of way and limited access plan. The plan shows the location of the trail and where the trail crosses limited access, and provides movement notes. See 1430.10(1)

1430.06 Access Approaches

(1) General

Access approaches may be allowed on limited access highways consistent with the requirements outlined in 1430.03, 1430.04, and 1430.05.

For additional information pertaining to approaches, refer to Chapters 915 (roundabouts), 920 (approach design templates), and 1410 (right of way), and the *Plans Preparation Manual*.

(2) Definitions

See Chapter 1420 for specific definitions of the approach types. The widths for the approach types are negotiated, and only the negotiated width is shown on the right of way and limited access plan.

1430.07 Frontage Roads

Local agency approval is required for any planned frontage roads, county roads, city streets, or cul-de-sacs. The local agency must also agree in writing to accept and maintain the new section as a county road or city street.

(1) General

Frontage roads are provided in conjunction with limited access highways to:

- Limit access to the main line.
- Provide access to abutting land ownerships.
- Restore continuity of the local street or roadway system.

Refer to Chapter 620 for frontage road general policy, and to Chapter 330 for required documentation.

By agreement under which the state is reimbursed for all costs involved, frontage roads that are not the responsibility of the state may be built by the state upon request of a local political subdivision, a private agency, or an individual.

(2) County Road and City Street

To connect roads or streets that have been closed off by the highway, short sections of county roads or city streets that are not adjacent to the highway may be constructed if they will serve the same purpose as, and cost less than, a frontage road.

(3) Cul-de-Sacs

For a frontage road or local street bearing substantial traffic that is terminated or closed at one end, provide a cul-de-sac (or other street or roadway consistent with the local policy or practice) that is sufficient to allow vehicles to turn around without encroachment on private property.

1430.08 Turnbacks

When WSDOT transfers jurisdiction of operating right of way to a city, town, or county a turnback agreement is required. See the *Agreements Manual* for turnback procedures.

Locate the turnback limits at points of logical termination. This will allow WSDOT to retain an adequate amount of right of way for maintenance of the highway and for other operational functions.

In areas where limited access rights have been acquired from the abutting property owners, the limited access rights will continue to be required for highway purposes, thus the limited access rights will not be included as part of a turnback agreement.

When a signalized intersection is in the area of a turnback, locate the turnback limit outside of the detector loops if WSDOT is continuing the ownership, operation, and maintenance of the signal system. For a roundabout, locate the turnback limit at the back of the raised approach splitter island if WSDOT is continuing the ownership, operation, and maintenance of the roundabout.

1430.09 Adjacent Railroads

(1) General

A limited access highway and a railroad are considered adjacent when they have a common right of way border with no other property separating them. The allowed approaches only apply to adjacent railroad property that is directly used for current railroad operation.

(2) Requirements

It is in the public interest to provide access to the railroad right of way, from limited access highways, for maintenance of the railroad and the utilities located on the railroad right of way when other access is not feasible. This applies both to new highways and to existing highways where limited access has been acquired.

Direct access is allowed when local roads are infrequent or there are few highway-railroad crossings from which trail-type access for maintenance purposes is feasible, and when unique topography or other unusual conditions justify its use.

Direct access from the highway is considered unnecessary and is not allowed when:

- There are local roads adjacent to or crossing the railroad.
- A trail-type road can be provided by the railroad between crossroads.
- The limited access highway is paralleled by a frontage road adjacent to the railroad.
- No highway previously existed adjacent to the railroad.

(3) Restrictions

To justify direct approaches to provide access to railroad right of way, all of the following conditions must be met:

- A maximum of one approach is allowed for every 2 miles of highway.
- The approach must not adversely affect the design, construction, stability, traffic safety, or operation of the highway.
- Except when the railroad is located in the median area, the approach is to be accomplished in a legal manner by right turns only to and from the roadway nearest the railroad. Median crossing is not allowed.

- The approach is secured by a locked gate under arrangements satisfactory to the department. (See approach Type C in Chapter 1420, and Chapter 1425.)
- Parking of any vehicles or railroad equipment is prohibited within limited access highway right of way.
- A special emergency maintenance permit must be obtained for periods of intensive railroad maintenance.
- The approach must be closed if the railroad operation ceases.
- Approaches are limited to use by the railroad company unless specific provisions for other use are shown on the right of way and limited access plan and included in the right of way negotiations.

1430.10 Modifications to Limited Access Highways

(1) General

Modifications to limited access highways can only be made by application of current design requirements and with the approval of the E&EP Director or designee and, when appropriate, the Federal Highway Administration.

Any change is a modification to limited access: new fence openings, closing existing fence openings, adding trails that cross into and out of the right of way, and widening existing approaches, for instance. The right of way and limited access plan must be revised and, if private approaches are involved, deeds must be redone.

Consider the following factors when evaluating a request for modification of a limited access highway:

- Existing level of control on the highway.
- Functional classification and importance of the highway.
- Percentage of truck traffic.
- Highway operations.
- Present or future land use.
- Environment or aesthetics.
- Economic considerations.
- Safety considerations.

Evaluate all revisions to limited access highways to determine if access hearings are required.

Also see Chapter 1425, "Access Point Decision Report," for requirements to be met for selected modifications to full control limited access highways such as the Interstate System and multilane state highway.

(2) Modifications for Private Access Approaches

(a) **Requirements.** Examples of access modification requested by abutting property owners include additional road approaches, changes in the allowed use, or additional users of existing road approaches.

Plan revisions that provide for additional access to abutting properties after the department has purchased the access rights are discouraged. However, these revisions may be considered if all of the following can be established:

- There are no other reasonable alternatives.
- The efficiency and safety of the highway will not be adversely impacted.
- The existing situation causes extreme hardship on the owner(s).
- The revision is consistent with the limited access highway requirements.

(b) **Procedures**. The region initiates a preliminary engineering review of the requested modification to or break in limited access. This preliminary review will be conducted with the HQ Access and Hearings Unit to determine if conceptual approval can be granted for the request. If conceptual approval can be granted then:

- The region initiates an engineering review of the requested modification.
- The region prepares and submits to HQ Plans Branch a preliminary right of way and limited access plan revision together with a recommendation for approval by the E&EP Director. When federal aid funds are

involved in any phase of the project, the proposed modification will be sent to FHWA for their review and approval.

- The recommendation will include an item-by-item analysis of the factors listed in 1430.10(1) and 1430.10(2)(a) above.

(c) **Valuation Determination.** Upon preliminary approval, region Real Estate Services prepares an appraisal for the value of the access change using a before and after appraisal.

- The appraisal follows the requirements set forth in the *Right of Way Manual*.
- The appraisal is reviewed by the HQ Real Estate Services Office. If the appraisal data does not support a value of $1,500 or more, a minimum value of $1,500 is used.
- For well documented special cases where it does not appear appropriate to base the charges on the reviewed appraisal, region Real Estate Services documents the circumstances that support granting the requested change at less than the determination of value in an administrative settlement letter.
- The appraisal package is sent to HQ Real Estate Services Office for review and approval.
- If federal aid funds were involved in purchasing access control, HQ Real Estate Services will send a copy of the appraisal package to FHWA for their review and approval.

(d) **Final Processing**.

- Region Real Estate Services informs the requestor of the approved appraised value for the change.
- If requestor is still interested, region prepares a "Surplus Disposal Package" for HQ Real Estate Services Office review and approval.
- At the same time, the preliminary right of way and limited access plan revision previously transmitted is processed for approval.
- After the department collects the payment from the requestor, the region issues a permit for the construction, if required.
- If an existing approach is being surrendered, region Real Estate Services obtains a conveyance from the property owner.
- HQ Real Estate Services Office prepares and processes a deed granting the change to the access rights.

(3) Modifications for Public At-Grade Intersections

(a) **Requirements**.

- Public at-grade intersections on partial control limited access highways serve local arterials that form part of the local transportation network.
- Requests for new intersections on limited access highways must be made by or through the local governmental agency to WSDOT. The region will forward this request, including the data referenced in 1430.10(1) and 1430.10(2)(a) to the HQ Access and Hearings Unit.
- New intersections require full application of current limited access acquisition and conveyance to the WSDOT. The access acquisition and conveyance must be completed prior to beginning construction of the new intersection. The new intersection will meet WSDOT design and spacing requirements.

(b) **Procedures**.

- The region evaluates the request and contacts the HQ Access and Hearings Unit for conceptual approval.
- The region submits an intersection plan for approval (Chapter 910) and right of way and limited access plan revision request *(Plans Preparation Manual*). This plan includes the limited access design requirements along the proposed public at-grade intersection.

- The State Design Engineer approves the intersection plan.
- The E&EP Director approves the access revision.
- The region submits the construction agreement to the State Design Engineer. (See the *Agreements Manual.*)
- The E&EP Director approves construction agreement.

(c) **Valuation Determination**.

- When a requested public at-grade intersection will serve a local arterial that immediately connects to the local transportation network, compensation will not be required.
- When a requested public at-grade intersection will serve only a limited area, does not immediately connect to the local transportation network, or is primarily for the benefit of a limited number of developers, compensation for the access change will be addressed in the plan revision request. In these situations, compensation is appropriate and a value will be determined as outlined in 1430.10(2)(c) above.

1430.11 Documentation

A list of the documents that are to be preserved [in the Design Documentation Package (DDP) or the Project File (PF)] is on the following website: http://www.wsdot.wa.gov/eesc/design/projectdev/

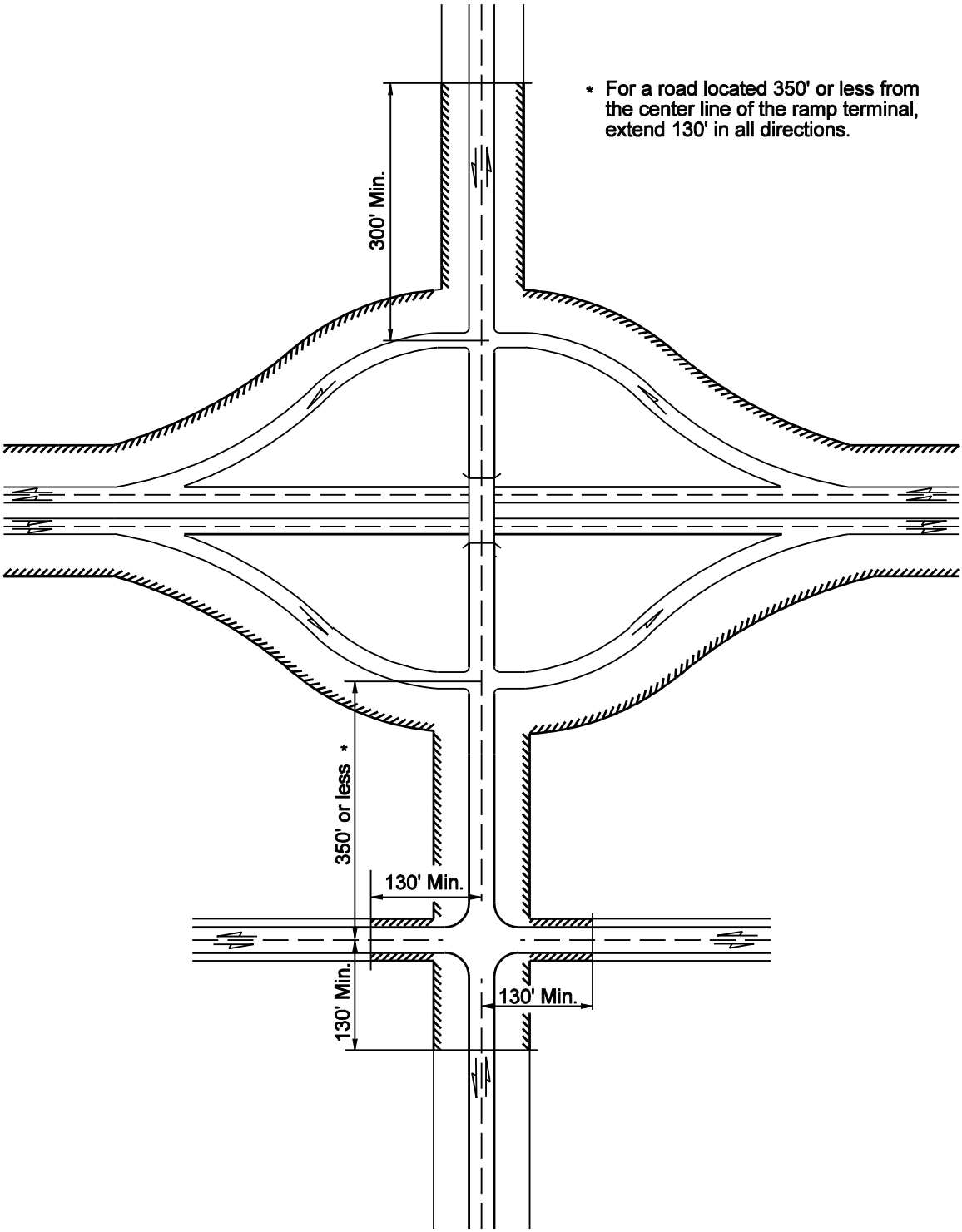

Full Access Control Limits - Interchange
Figure 1430-1a

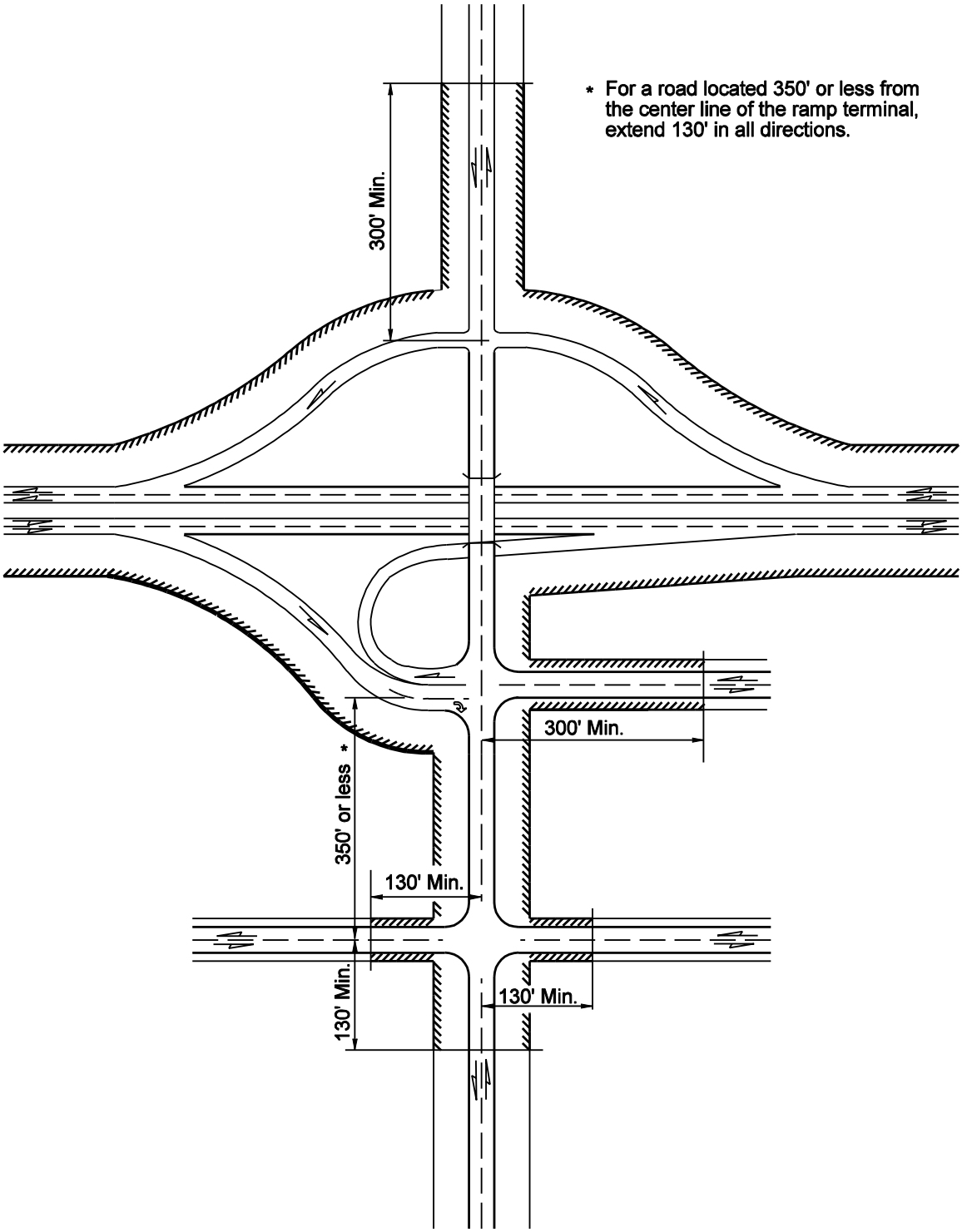

Full Access Control Limits - Interchange
Figure 1430-1b

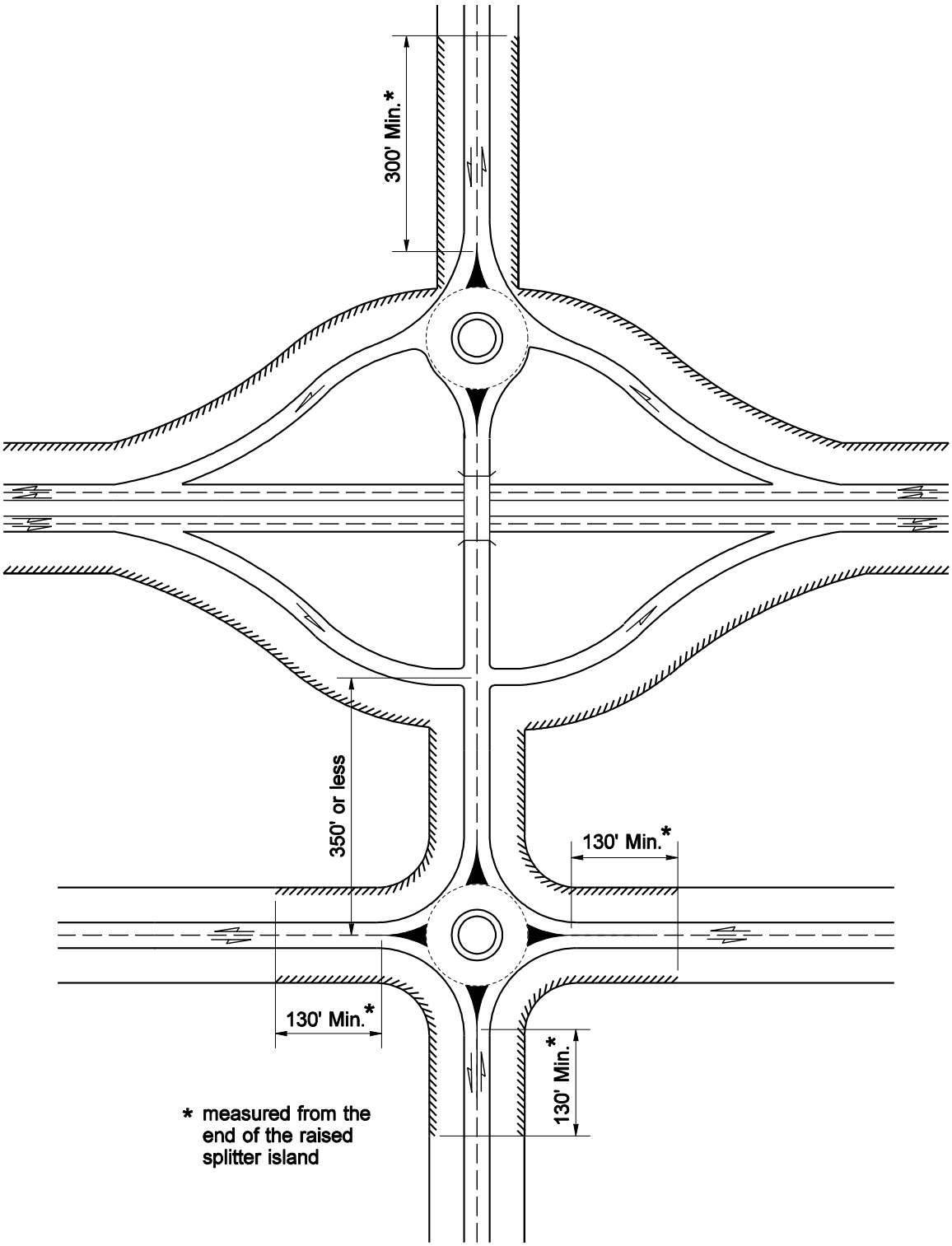

Full Access Control Limits - Interchange
Figure 1430-1c

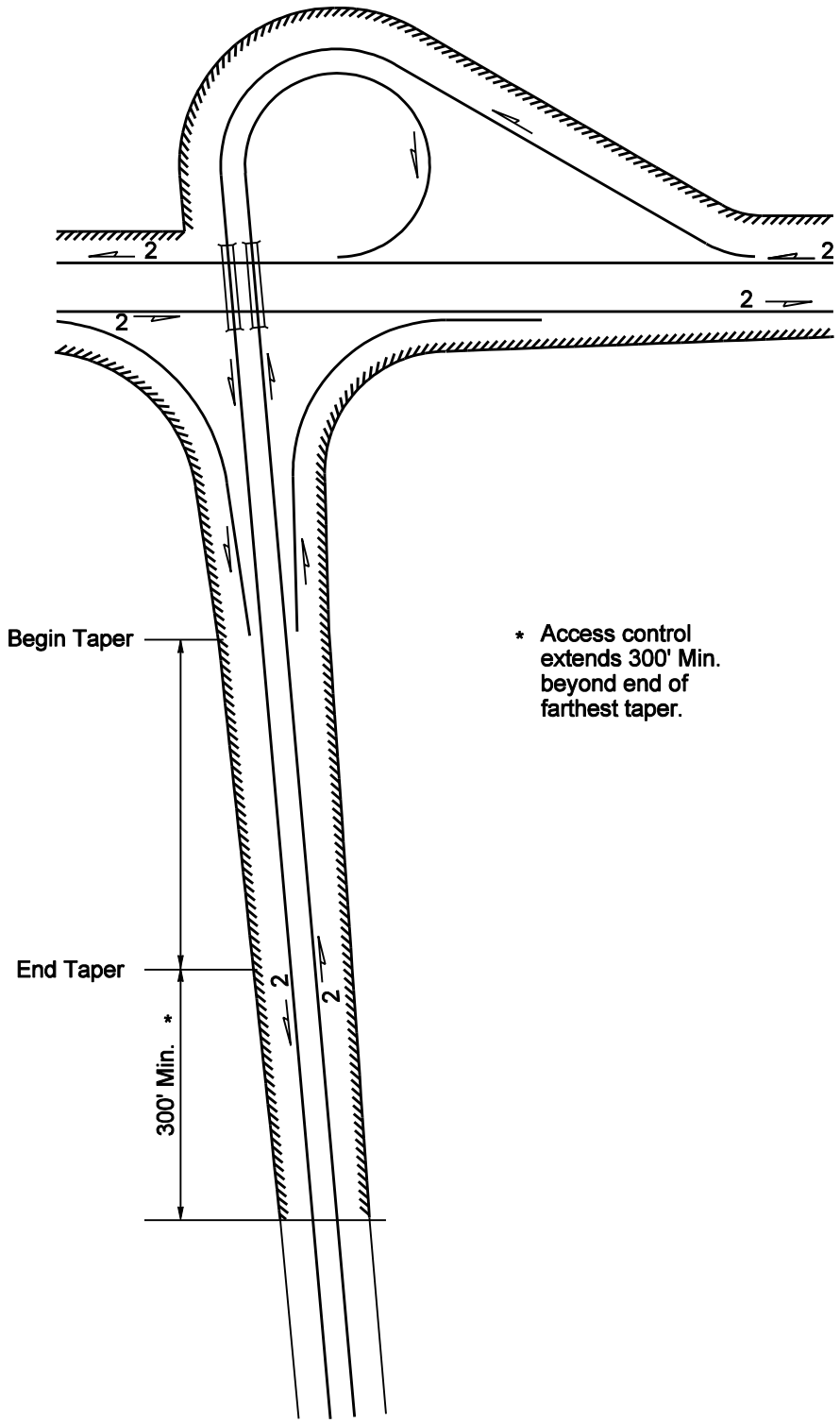

Full Access Control Limits - Ramp Terminal With Transition Taper

Figure 1430-2

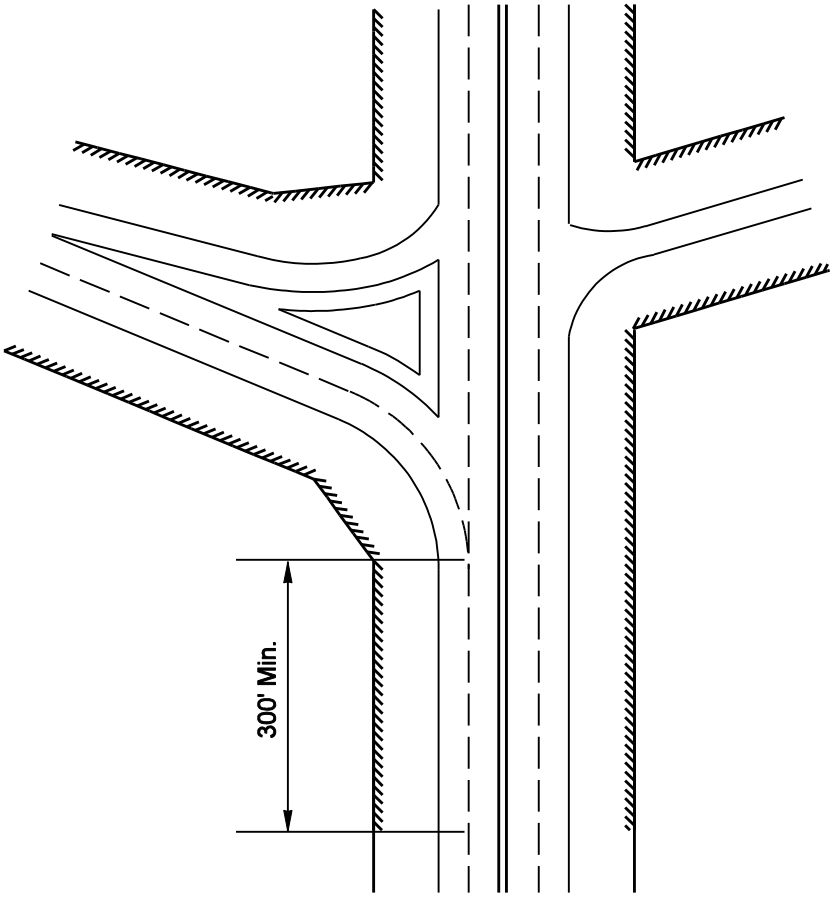

Full Access Control Limits - Single Point Urban Interchange
Figure 1430-3

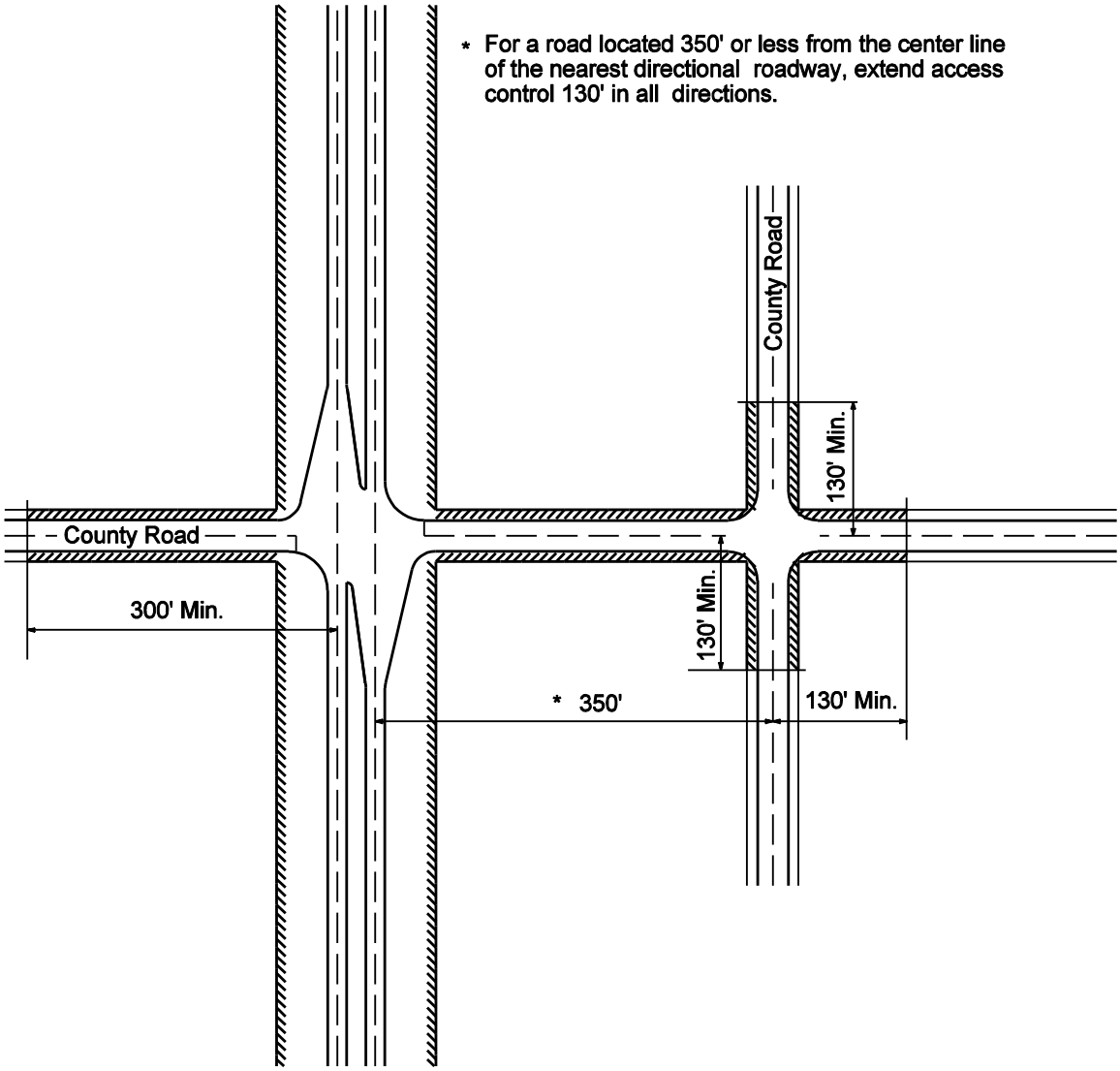

Partial Access Control Limits - At-Grade Intersections

Figure 1430-4

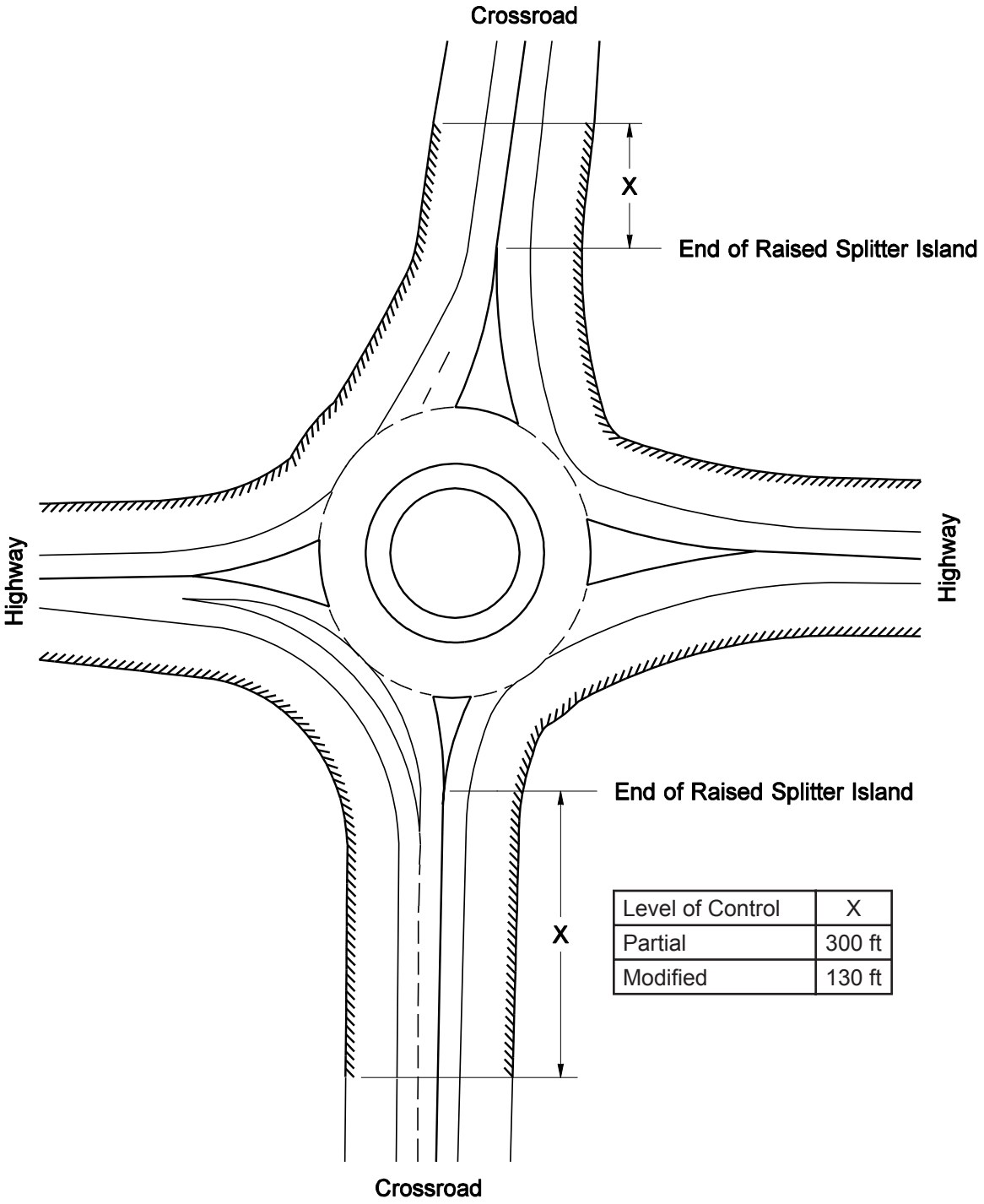

Level of Control	X
Partial	300 ft
Modified	130 ft

Partial and Modified Access Control Limits - Roundabout Intersections
Figure 1430-5

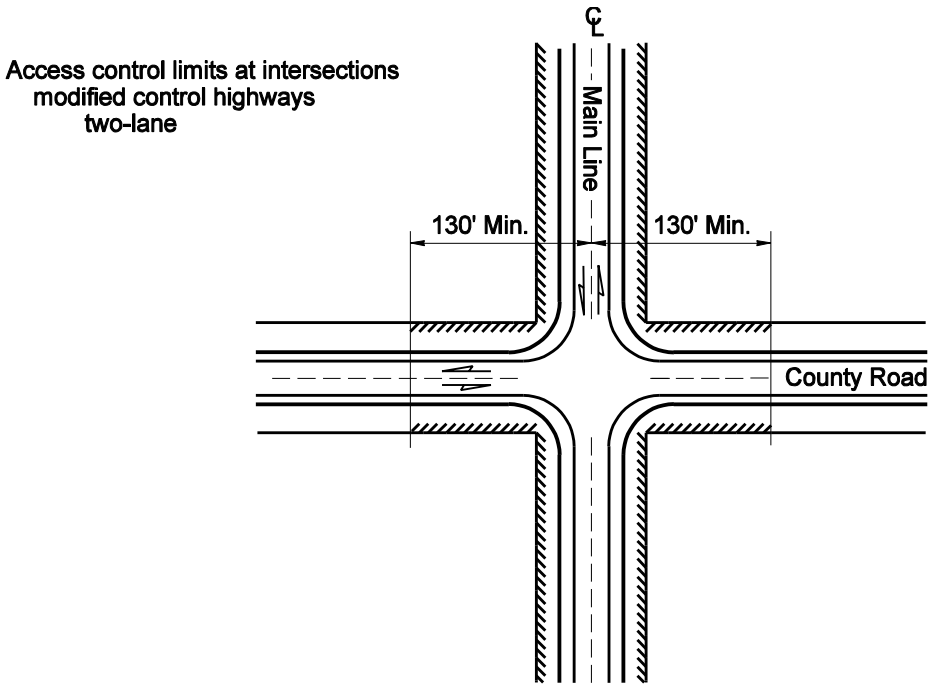

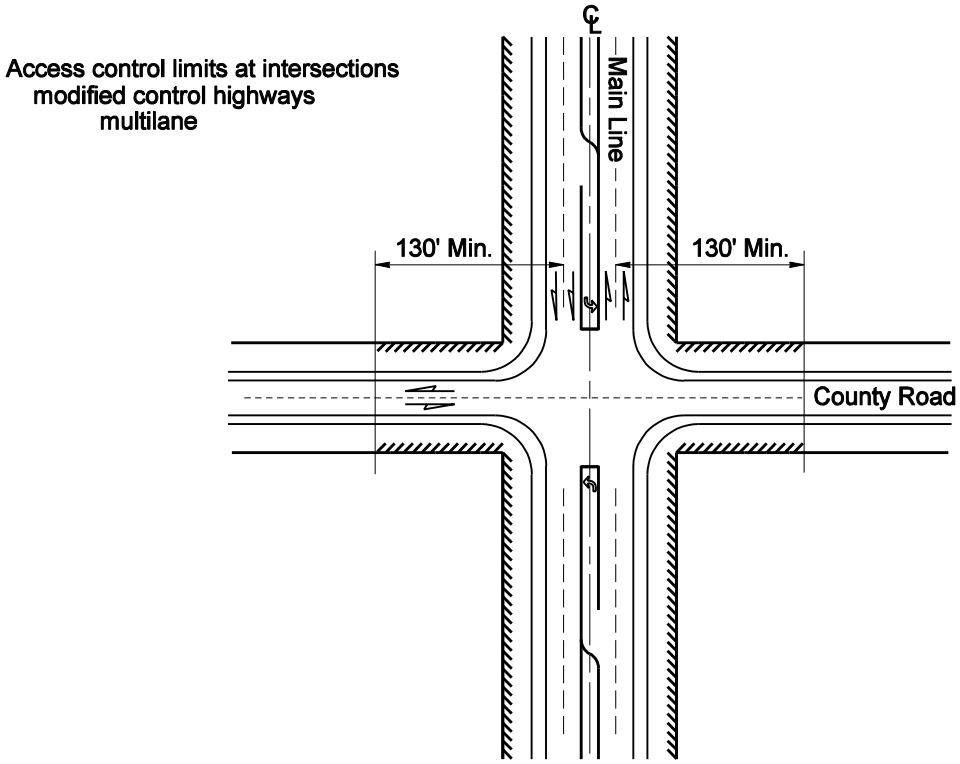

Modified Access Control Limits - Intersections
Figure 1430-6

1435.01 General
1435.02 Managed Access Classes
1435.03 Corner Clearance Criteria
1435.04 Access Connection Categories
1435.05 Access Connection Permit
1435.06 Permit Process
1435.07 Design Considerations
1435.08 Other Considerations
1435.09 Preconstruction Conference
1435.10 Adjudicative Proceedings
1435.11 Documentation

1435.01 General

This chapter describes the permitting process for granting permission to connect to managed access highways within unincorporated areas. Chapter 1420, "Access Control," has an overview of access control, and the references list and the definitions of terminology for this chapter.

In Washington, managed access highways include all state highways that are not limited access highways. The managed access highways do not include limited access highways where the access rights have been acquired in compliance with Revised Code of Washington (RCW) Chapter 47.52. State highways that are planned for or established as limited access, as listed in the Access Control Tracking System (at http://www.wsdot.wa.gov/eesc/design/access/, under the RELATED SITES heading), are treated as managed access highways until such time when the limited access rights are acquired.

Access to managed access highways is regulated by the governmental entity having jurisdiction over the highway's roadsides. Access connection permits are issued on managed access highways. The Washington State Department of Transportation (WSDOT) has access connection permitting authority over all state highways outside incorporated towns and cities. Incorporated towns and cities have access connection permitting authority for the managed access state highways within their boundaries.

Managed access highways are classified from Class 1, the most restrictive, to Class 5, the least restrictive. Access connections to managed access highways are further designated by category, from Category I to Category IV, by vehicular usage.

After a new law, RCW 47.50, went into effect (in 1991) by establishing access management, the first set of new rules, Washington Administrative Code (WAC) 468-51, titled Highway Access Management Access Permits--Administrative Process, was prepared and then adopted by the department in July 1992. This first WAC established a permit fee schedule and application process for only those state highways under the access connection permitting authority of WSDOT.

The second set of new rules, WAC 468-52, titled Highway Access Management -- Access Control Classification System and Standards, was prepared and then adopted by the department in February 1993. This second WAC created a classification system and established design criteria for all managed access highways, including those managed access state highways within the incorporated limits of a town or city.

As with any set of rules, time determines what works and what needs to be changed. Beginning in 1998, the department began reviewing the two existing Highway Access Management WACs (468-51 and 468-52) for possible modifications and improvements. After numerous meetings with representatives from the private sector, government, lawmakers, and the public, the department adopted a newly revised pair of WACs in March 1999.

1435.02 Managed Access Classes

Managed access state highways consist of a classification system of five classes. The classes are arranged from the most restrictive Class 1 to the least restrictive Class 5. In general, most state highways outside the incorporated limits of a city or town have been designated as a Class 1 or 2 highway, with only the most urban, lower speed state highways within an incorporated town or city having the Class 5 designation. Figure 1435-3 lists the five classes of highways with a brief description of each class.

WSDOT keeps a record of the assigned managed access classifications, by mile post, in the database: Access Control Tracking System at http://www.wsdot.wa.gov/eesc/design/access/ under the RELATED SITES heading.

The principal objective of the managed access classification system is to establish access management criteria to be adhered to in the planning for and (regional) approval of access connections to the state highway system.

On Class 1 highways, mobility is the primary function, while on Class 5 highways, access needs may have priority over through mobility needs. Class 2 highways also favor mobility while Class 3 and Class 4 highways generally try to strike a balance between mobility and access. However, remember that restricting or keeping access connections to a minimum is a goal of WSDOT to help preserve the safety, operations, and functional integrity of the state highway.

The most notable distinction between the five classes is the minimum spacing requirements of access connections. Minimum access point spacings, on the same side of the highway, are shown in Figure 1435-3.

On all highway classes one through five, access connections are to be located and designed to minimize interference with transit facilities and high occupancy vehicle (HOV) facilities on state highways where such facilities exist or where such facilities are proposed in a state, regional, metropolitan, or local transportation plan. In such cases, if reasonable access is available from the public road/street system, access is to be provided from the public road/street system rather than from the state highway.

The functional characteristics and the legal requirements for each class are as follows:

(1) Class 1

(a) **Functional Characteristics:**

Class 1 highways provide for high speed and/or high volume traffic movements for interstate, interregional, and intercity travel needs, and some intracity travel needs. Service to abutting land is subordinate to providing service to major traffic movements.

Highways in Class 1 are typically distinguished by a highly controlled, limited number of (public and private) access points, restrictive medians with limited median openings on multilane facilities, and infrequent traffic signals.

(b) **Legal Requirements:**

1. It is the intent that Class 1 highways be designed to have a posted speed limit of 50 to 65 mph. Spacing of intersecting streets, roads, and highways are planned with a minimum spacing of one mile (1 mi). One-half mile (1/2 mi) spacing may be allowed, but only when no reasonable alternative access exists.
2. Private access connections to the state highway are not allowed except when the property has no other reasonable access to the public road/street system. When a private access connection must be provided, the following conditions apply:
   - The access connection continues until such time when other reasonable access to a highway with a less restrictive access control class or access to the public road/street system becomes available and is allowed.
   - The minimum distance to another access point is one thousand three hundred twenty feet (1320’) along the same side of the highway. Nonconforming access connection permits may be issued to provide access connections to parcels whose highway frontage, topography, or location otherwise precludes issuance of a conforming access connection permit, however, variance permits are not allowed.
   - No more than one access connection may be provided to an individual parcel or to contiguous parcels under the same ownership.
   - All private access connections are for right turns only on multilane facilities, unless special conditions justify the exception and are documented by a traffic analysis, in the access connection permit application, that is signed and

sealed by a qualified professional engineer who is registered in accordance with RCW 18.43.

- Additional access connections to the state highway are not allowed for newly created parcels resulting from property divisions. All access for these parcels must be provided by an internal road/street network. Access to the state highway will be at existing permitted locations or at revised locations.

3. Restrictive medians are provided on multilane facilities to separate opposing traffic movements and to prevent unauthorized turning movements.

(2) Class 2

(a) **Functional Characteristics**

Class 2 highways provide for medium to high speeds and medium to high volume traffic movements over medium and long distances for interregional, intercity, and intracity travel needs. Direct access service to abutting land is subordinate to providing service to traffic movement.

Highways in Class 2 are typically distinguished by existing or planned restrictive medians on multilane facilities, and by large minimum distances between (public and private) access points.

(b) **Legal Requirements**

1. It is the intent that Class 2 highways be designed to have a posted speed limit of 35 to 50 mph in urbanized areas and 45 to 55 mph in rural areas. Spacing of intersecting streets, roads, and highways is planned with a minimum spacing of one-half mile (1/2 mi). Less than one-half mile (1/2 mi) intersection spacing may be allowed, but only when no reasonable alternative access exists.

   In urban areas and developing areas where higher volumes are present or growth that will require signalization is expected in the foreseeable future, it is imperative that the location of any public access point be planned carefully to ensure adequate signal progression. Addition of all new access points, public or private, that might require signalization will require an engineering analysis that is signed and sealed by a qualified professional engineer who is registered in accordance with RCW 18.43.

2. Private access connections to the state highway system are allowed only when the property has no other reasonable access to the public road/street system or if access to the public road/street system will cause unacceptable traffic operational conditions or safety concerns on that system. When a private access connection must be provided, the following conditions apply:

   - The access connection continues until such time when other reasonable access to a highway with a less restrictive access control class or acceptable access to the public road/street system becomes available and is allowed.
   - The minimum distance to another (public or private) access point is six hundred sixty feet (660’) on the same side of the highway. Nonconforming access connection permits may be issued to provide access to parcels whose highway frontage, topography, or location precludes issuance of a conforming access connection permit.
   - Only one access connection is allowed for an individual parcel or to contiguous parcels under the same ownership unless the highway frontage exceeds one thousand three hundred twenty feet (1320’) and it can be shown that the additional access connection will not adversely affect the desired function of the state highway in accordance with the assigned managed access Class 2, and will not adversely affect the safety or operation of the state highway.
   - Variance permits may be allowed if there are special conditions and the exception can be justified to the satisfaction of the department by a traffic analysis in the access connection permit application

that is signed and sealed by a qualified professional engineer who is registered in accordance with Chapter 18.43 RCW.

- All private access connections are for right turns only on multilane facilities unless there are special conditions and the exception can be justified to the satisfaction of the department by a traffic analysis in the access connection permit application that is signed and sealed by a qualified professional engineer who is registered in accordance with Chapter 18.43 RCW, and only if left turn channelization is provided.
- Additional access connections to the state highway are not allowed for newly created parcels resulting from property divisions. All access for these parcels must be provided by an internal road/street network. Access to the state highway will be at existing permitted locations or at revised locations.

3. On multilane facilities, restrictive medians are provided to separate opposing traffic movements and to prevent unauthorized turning movements; however, a nonrestrictive median or a two way left turn lane may be used when special conditions exist and main line volumes are below 20,000 ADT.

(3) Class 3

(a) **Functional Characteristics**

Class 3 highways provide for moderate travel speeds and moderate traffic volumes for medium and short travel distances for intercity, intracity and intercommunity travel needs. There is a reasonable balance between access and mobility needs for highways in this class. This class is to be used primarily where the existing level of development of the adjoining land is less intensive than maximum build out and where the probability of significant land use change and increased traffic demand is high.

Highways in Class 3 are typically distinguished by planned restrictive medians on multilane facilities, and medium minimum distances between (public and private) access points. Two-way left-turn lanes may be used where special conditions justify them and main line traffic volumes are below 25,000 ADT. Development of properties with internal road/street networks and joint access connections are encouraged.

(b) **Legal Requirements**

1. It is the intent that Class 3 highways be designed to have a posted speed limit of 30 to 40 mph in urbanized areas and 45 to 55 mph in rural areas. In rural areas, spacing of intersecting streets, roads, and highways is planned with a minimum spacing of one-half mile (1/2 mi). Less than one-half mile (1/2 mi) intersection spacing may be allowed, but only when no reasonable alternative access exists.

   In urban areas and developing areas where higher volumes are present or growth that will require signalization is expected in the foreseeable future, it is imperative that the location of any public access point be planned carefully to ensure adequate signal progression. Where feasible, major intersecting roadways that might ultimately require signalization are planned with a minimum of one-half mile (1/2 mi) spacing. Addition of all new access points, public or private, that may require signalization will require an engineering analysis that is signed and sealed by a qualified professional engineer who is registered in accordance with RCW 18.43.

2. Private Access Connections:

   - No more than one access connection may be provided to an individual parcel or to contiguous parcels under the same ownership unless it can be shown that additional access connections will not adversely affect the desired function of the state highway in accordance with the assigned managed access Class 3, and will not adversely affect the safety or operation of the state highway.

- The minimum distance to another (public or private) access point is three hundred thirty feet (330') on the same side of the highway. Nonconforming access connection permits may be issued to provide access to parcels whose highway frontage, topography, or location precludes issuance of a conforming access connection permit.
- Variance permits may be allowed if there are special conditions and the exception can be justified to the satisfaction of the department by a traffic analysis in the access connection permit application that is signed and sealed by a qualified professional engineer who is registered in accordance with RCW 18.43.

(4) Class 4

(a) **Functional Characteristics**

Class 4 highways provide for moderate travel speeds and moderate traffic volumes for medium and short travel distances for intercity, intracity and intercommunity travel needs. There is a reasonable balance between direct access and mobility needs for highways in this class. This class is to be used primarily where the existing level of development of the adjoining land is more intensive and where the probability of major land use changes is less probable than on Class 3 highways segments.

Highways in Class 4 are typically distinguished by existing or planned nonrestrictive medians. Restrictive medians may be used to mitigate unfavorable operational conditions such as turning, weaving, and crossing conflicts. Minimum access connection spacing requirements apply if adjoining properties are redeveloped.

(b) **Legal Requirements**

1. It is the intent that Class 4 highways be designed to have a posted speed limit of 30 to 35 mph in urbanized areas and 35 to 45 mph in rural areas. In rural areas, spacing of intersecting streets, roads, and highways is planned with a minimum spacing of one-half mile (1/2 mi). Less than one-half mile (1/2 mi) intersection spacing may be allowed, but only when no reasonable alternative access exists.

   In urban areas and developing areas where higher volumes are present or growth that will require signalization is expected in the foreseeable future, it is imperative that the location of any public access point be planned carefully to ensure adequate signal progression. Where feasible, major intersecting roadways that might ultimately require signalization are planned with a minimum of one-half mile (1/2 mi) spacing. Addition of all new access points, public or private, that may require signalization will require an engineering analysis that is signed and sealed by a qualified professional engineer who is registered in accordance with RCW 18.43.

2. Private Access Connections:
   - No more than one access connection may be provided to an individual parcel or to contiguous parcels under the same ownership unless it can be shown that additional access connections will not adversely affect the desired function of the state highway in accordance with the assigned managed access Class 4, and will not adversely affect the safety or operation of the state highway.
   - The minimum distance to another (public or private) access point is two hundred fifty feet (250') on the same side of the highway. Nonconforming access connection permits may be issued to provide access connections to parcels whose highway frontage, topography, or location precludes issuance of a conforming access connection permit.
   - Variance permits may be allowed if there are special conditions and the exception can be justified to the satisfaction of the department by a traffic analysis in the connection permit application that is signed and sealed by a qualified professional engineer who is registered in accordance with RCW 18.43.

(5) Class 5

(a) **Functional Characteristics**

Class 5 highways provide for moderate travel speeds and moderate traffic volumes for primarily short travel distances for intracity and intracommunity trips and for access to state highways of a higher class. Access needs may generally be higher than the need for through traffic mobility without compromising the public health, welfare, or safety. These highways will generally have nonrestrictive medians.

(b) **Legal Requirements**

1. It is the intent that Class 5 highways be designed to have a posted speed limit of 25 to 35 mph. In rural areas, spacing of intersecting streets, roads, and highways is planned with a minimum spacing of one-quarter mile (1/4 mi). Less than one-quarter mile (1/4 mi) spacing may be allowed where no reasonable alternative exists. In urban areas and developing areas where higher volumes are present or growth that will require signalization is expected in the foreseeable future, it is imperative that the location of any public access point be planned carefully to ensure adequate signal progression. Where feasible, major intersecting roadways that might ultimately require signalization are planned with a minimum of one-quarter mile (1/4 mi) spacing. Addition of all new access points, public or private, that might require signalization will require an engineering analysis that is signed and sealed by a qualified professional engineer who is registered in accordance with RCW 18.43.
2. Private Access Connection:
   - No more than one access connection may be provided to an individual parcel or to contiguous parcels under the same ownership unless it can be shown that additional access connections will not adversely affect the desired function of the state highway in accordance with the assigned managed access Class 5, and will not adversely affect the safety or operation of the state highway.
   - The minimum distance to another (public or private) access point is one hundred twenty five feet (125') on the same side of the highway. Nonconforming access connection permits may be issued to provide access to parcels whose highway frontage, topography, or location precludes issuance of a conforming access connection permit.
   - Variance permits may be allowed if there are special conditions and the exception can be justified to the satisfaction of the department by a traffic analysis in the access connection permit application that is signed and sealed by a qualified professional engineer who is registered in accordance with RCW 18.43.

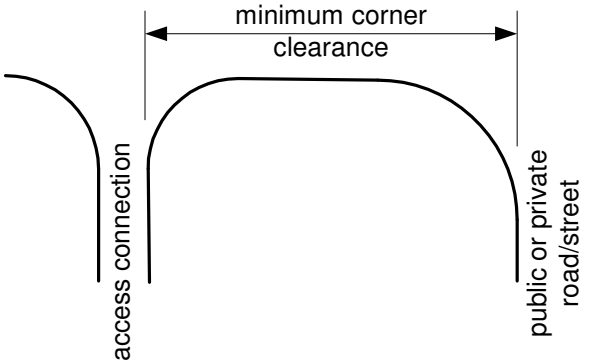

Minimum Corner Clearance
Figure 1435-1

1435.03 Corner Clearance Criteria

In addition to the five access control classes, there are also corner clearance criteria that may be used for access connections near intersections. See Figure 1435-1.

Corner clearance spacing must meet or exceed the minimum access point spacing requirements of the applicable managed access highway class. A single access connection may be placed closer to the intersection, in compliance with the permit application process specified in WAC 468-51, and in accordance with the following criteria:

With Restrictive Median		
Position	**Access Allowed**	**Minimum (feet)**
Approaching Intersection	Right In/Right Out	115
Approaching Intersection	Right In Only	75
Departing Intersection	Right In/Right Out	230*
Departing Intersection	Right Out Only	100
Without Restrictive Median		
Position	**Access Allowed**	**Minimum (feet)**
Approaching Intersection	Full Access	230*
Approaching Intersection	Right In Only	100
Departing Intersection	Full Access	230*
Departing Intersection	Right Out Only	100

* For speeds less than 35 mph, and for access Class 5, 125 feet may be used.

Minimum Corner Clearance: Distance From Access Connection to Intersections
Figure 1435-2

(a) The minimum corner clearance criteria in Figure 1435-2 may be used where access point spacing cannot be obtained due to property size and a joint use access connection cannot be secured, or where it is determined by WSDOT to be not feasible because of conflicting land use or conflicting traffic volumes or operational characteristics.

(b) Some local agencies have adopted corner clearance as a design element in their adopted design standards. Coordinate with the local agency regarding corner clearance of an access connection near an intersecting local road or street.

(c) In cases where access connections are allowed under the above criteria, the conforming permit issued in compliance with WAC 468-51 must contain the following additional conditions:

1. Variance and nonconforming permits are not allowed.
2. There must be no more than one access connection per property frontage on the state highway.
3. When a joint-use access connection or an alternate road/street system access (meeting or exceeding the minimum corner clearance requirement) becomes available, the permit holder must close the permitted access connection, unless the permit holder shows to the WSDOT's satisfaction that such closure is not feasible.

1435.04 Access Connection Categories

Whenever an access connection permit is issued on a managed access state highway, the permit must also specify an access connection category. There are four categories, defined as Category I to Category IV. The first three categories, I through III, are based on the maximum vehicular usage of the access connection. Category IV specifies a temporary use, usually for less than a year. Access connection permits must specify the category and the maximum vehicular usage of the access connection in the permit

All access connections are determined by the WSDOT to be in one of the following categories (WAC 468-51-040):

(1) Category I

“Category I - minimum connection” provides connection to the state highway system for up to ten single family residences, a duplex, or a small multifamily complex of up to ten dwelling units that use a common access connection. The category also applies to permanent access

connections to agricultural and forest lands, including field entrances; access connections for the operation, maintenance, and repair of utilities; and access connections serving other low volume traffic generators expected to have an average weekday vehicle trip ends (AWDVTE) of one hundred (100) or less.

(2) Category II

"Category II - minor connection" provides connection to the state highway system for medium volume traffic generators expected to have an AWDVTE of one thousand five hundred (1500) or less, but not included in Category I.

(3) Category III

"Category III - major connection" provides connection to the state highway system for high volume traffic generators expected to have an AWDVTE exceeding one thousand five hundred (1500).

(4) Category IV

"Category IV - temporary connection" provides a temporary, time limited, connection to the state highway system for a specific property for a specific use with a specific traffic volume. Such uses include, but are not limited to, logging, forest land clearing, temporary agricultural uses, temporary construction, and temporary emergency access. The department reserves the right to remove any temporary access connection at its sole discretion and at the expense of the property owner after the expiration of the permit. Further, a temporary access connection permit does not bind the department, in any way, to the future issuance of a permanent access connection permit at the temporary access connection location.

1435.05 Access Connection Permit

RCW 47.50 requires all access connections to be permitted. This can be accomplished by the permitting process or by the connection being "grand-fathered." Grand-fathered means it was in place prior to July 1, 1990. The grand-fathered status remains in effect until WSDOT requires removal (1435.07) or there is a change from the 1990 AWDVTE or established use of the property.

All new access connections and alterations and improvements to existing access connections to state highways require an access connection permit. Every owner of property that abuts a state highway has the right to reasonable access. This right may be restricted with respect to the highway if reasonable access can be provided by way of another public road/street.

When a new road or street is to be constructed, WSDOT approval is required for intersection design, spacing, and construction work on the right of way. This is usually in the form of a Developer Agreement. If, however, an access connection permit is issued, it will be rendered null and void if and when the road or street is duly established as a public road or public street by the local governmental entity.

Access connection permits authorize construction improvements, relating to the access connection only, to be built by the permit holder on department right of way. It is the responsibility of the applicant or permit holder to obtain all other local permits or other agency approvals that are required, including satisfaction of all environmental regulations. Except where the access connection replaces an existing access connection as a result of department relocation activity, it is the responsibility of the applicant to acquire any property rights necessary to provide continuity from the applicant's property to the state highway right of way if the applicant's property does not abut the state's right of way.

The alteration or closure of any existing access connection caused by changes to the character, intensity of development, or use of the property served by the access connection or the construction of any new access connection must not begin before an access connection permit is obtained.

If a property owner or permit holder who has a valid access connection permit wishes to change the character, use, or intensity of the property or development served by the access connection, the permitting authority must be contacted to determine whether an upgraded access connection permit will be required.

Regardless of where the permitting authority lies, it is the responsibility of the applicant to gain approval of plans (showing the construction details) from the Department of Transportation if there is to be any effect on state highway geometrics, channelization, or drainage. The design must conform to guidance that is elsewhere in this manual; Chapters 910, 920, and 940, for example; and other WSDOT manuals as applicable. Scheduling the work is discussed in 1435.08(3). The preconstruction conference is discussed in 1435.09.

1435.06 Permit Process

An access connection permit is obtained from the department by submitting the appropriate application form, including the fee, plans, traffic data, and access connection information to the department for review. All access connection and roadway design documents for Category II and III permits must bear the seal and signature of a professional engineer registered in Washington State.

The permitting process begins with the application. Upon submittal of the application with all the attached requirements it is reviewed and either denied or accepted. If denied, the department must notify the applicant in writing stating the reasons and the applicant will have thirty (30) days to submit a revised application. Once the application is approved and the permit is issued, the applicant may begin construction. No construction is allowed on the department's right of way until all necessary department and local government permits are issued.

The Access Manager in each region keeps a record of all access points distinguishing between those that are permitted and those that are grand-fathered. A permit for a grand-fathered access point is not required but may be issued for record-keeping reasons.

(1) Conforming Access Connection Permit

Conforming access connection permits may be issued for access connections that conform to the functional characteristics and all legal requirements for the designated class of the highway.

Conforming access connection permits may not be issued for access connections to Class I or II highways because of the legal restriction of private access connections. See Figure 1435-3.

(2) Nonconforming Access Connection Permit

Nonconforming access connection permits may be issued for short-term access connections pending availability of a future joint-use access connection or public road/street system access:

- For location and spacing not meeting requirements.
- For Category I through IV permits.
- After an analysis and determination by the department that a conforming access connection cannot be made at the time of permit application submittal.
- After a finding that the denial of an access connection will leave the property without a reasonable means of access to the public road/street system.

In such instances, the permit is to be noted as being a nonconforming access connection permit and contains specific restrictions and provisions, including:

- Limits on the maximum vehicular use of the access connection.
- The future availability of alternate means of reasonable access for which a conforming access connection permit can be obtained.
- The removal of the nonconforming access connection at the time the conforming access is available.
- The properties to be served by the access connection.
- Other conditions as necessary to carry out the provisions of RCW 47.50.

(3) Variance Access Connection Permit

Variance access connection is a special nonconforming or additional access connection permit issued for long-term use where future public road/street system access is not foreseeable:

- For location and spacing not meeting requirements or for an access connection that exceeds the number allowed for the class.
- For Category II and III permits only.
- After an engineering study demonstrates, to the satisfaction of the department, that the access connection will not adversely affect the safety, maintenance, or operation of the highway in accordance with its assigned managed access class.

In such instances, the permit is to be noted as being a variance access connection permit and specifies conditions or limits including, but not limited to:

- Limits on the maximum vehicular use of the access connection.
- The properties to be served by the access connection.
- Other conditions as necessary to carry out the provisions of RCW 47.50.

This permit will remain valid until modified or revoked by the permitting authority unless an upgraded permit is required due to changes in property site use. (See 1435.08(1).)

A variance access connection permit must not be issued for an access connection that does not conform to minimum corner clearance requirements. (See 1435.03.)

(4) Median Opening

Median opening includes openings requested for both new access connections and for existing access connections. See Chapter 910 for median crossover spacing and other design guidance.

- New median openings proposed as part of a new access connection are reviewed as part of the permit application review process.
- Requests for the construction of new median openings to serve existing permitted access connections require a reevaluation of the location, quantity, design of existing access connections, and traffic at the existing access connections.
- The property owner must file a new access connection permit application, for the proper access connection category, showing the new proposed median opening location and design and its relationship to the existing or modified access connections.
- Nothing contained herein is to be construed to prohibit the department from closing an existing median opening where operational or safety reasons require the action.
- The department must notify affected property owners, permit holders and tenants, in writing, thirty (30) days in advance of the closure of a median opening unless immediate closure is needed for safety or operational reasons.

1435.07 Design Considerations

See Chapter 920, “Road Approaches,” for design considerations (design templates) and Chapter 700 regarding mailbox locations.

1435.08 Other Considerations

(1) Changes in Property Site Use With Permitted Access Connection

The access connection permit is issued to the permit holder for a particular type of land use generating specific projected traffic volumes at the final stage of proposed development. Any changes made in the use, intensity of development, type of traffic, or traffic flow require the permit holder, an assignee, or the property owner to contact the department to determine if further analysis is needed because the change is significant and will require a new permit and modifications to the access connection. (WAC 468-51-110)

A significant change is one that will cause a change in the category of the access connection permit or one that causes an operational, safety, or maintenance problem on the state highway system based on objective engineering criteria or available accident data. Such data will be provided to the property owner and/or permit holder and tenant upon written request. (WAC 468-51-110)

(2) Existing Access Connections

(a) **Closure of Grand-Fathered Access Connections** Any access connections that were in existence and in active use on July 1, 1990 may be grand-fathered.

The grand-fathered access connection may continue unless:

- There are changes from the 1990 AWDVTE.
- There are changes from the 1990 established use.
- The department determines that the access connection does not provide minimum acceptable levels of highway safety and mobility based on accident and/or traffic data or accepted traffic engineering criteria. (A copy of which must be provided to the property owner, permit holder, and/or tenant upon written request.) (WAC 468-51-130)

(b) **Department Construction Projects**

1. Notification

   The department must notify affected property owners, permit holders, business owners, and emergency services in writing, where appropriate, whenever the department's work program requires the modification, relocation, or replacement of their access connections. In addition to written notification, the department will facilitate, where appropriate, a public process that may include, but is not limited to, public notices, meetings or hearings, and individual meetings.

2. Modifications -- Considerations

   When the number, location, or design of existing access connections to the state highway is being modified by a department construction project, the resulting modified access connections must provide the same general *functionality* for the existing property use as they did before the modification, taking into consideration the existing site design, normal vehicle types, and traffic circulation requirements. These are evaluated on an individual basis. It is important to remember that the intent is not to *damage* the property owner by removing nonconforming access connections, but to eliminate access connections that are both nonconforming and not needed.

   The permitting authority evaluates each property individually to make a determination of which category of access connection and which design template (Chapter 920) will be reasonable. If it is a commercial parcel, determine if the business can function with one access connection. Each parcel, or contiguous parcels under the same ownership being used for the same purpose, is only allowed one access connection. If the business cannot function properly with only one access connection, a variance permit may be issued for additional access connections. If the property is residential, only one access connection is allowed, however, certain circumstances might require an additional access connection.

3. Costs

   - **Replacement of existing access connections** - When access connections are made as part of a department construction project replacing existing access connection points without material differences, no additional permit is required. Costs are borne by the department.
   - **Modifications** - If the modification of the access connection point is based on the owner's request and is more extensive than the routine replacement of an existing access connection, the owner must also participate in the differential cost.

(3) Work by Permit Holder's Contractor

The department requires that work done by the owner's contractor be accomplished at the completion of the department's contract or be scheduled so as not to interfere with the department's contractor. The department may require a surety bond prior to construction of the access connection in accordance with WAC 468-51-070.

1435.09 Preconstruction Conference

All new access connections including alterations and improvements to existing access connections to the highway require an access connection permit. The department may require a preconstruction conference prior to any work being performed on the department's right of way. The preconstruction conference must be attended by those necessary to assure compliance with the terms and provisions of the permit. Details for the individual access connections will be included in the construction permit. This may include access connection widths, drainage requirements, surfacing requirements, mailbox locations, and other information. (WAC 468-51-090)

1435.10 Adjudicative Proceedings

Any person who has standing to challenge any of the following department actions may request an adjudicative proceeding (an appeal to an Administrative Law Judge) within thirty (30) days of the department's written decision: (WAC 468-51-150)

- Denial of an access connection permit application pursuant to WAC 468-51-080
- Permit conditions pursuant to WAC 468-51-150
- Permit modifications pursuant to WAC 468-51-120
- Permit revocation pursuant to WAC 468-51-120
- Closure of permitted access connection pursuant to WAC 468-51-120
- Closure of grand-fathered access connection pursuant to WAC 468-51-130

An appeal of a decision by the department can only be requested if the administrative fee has been paid. If the fee has not been paid, the permit application is considered incomplete and an adjudicative proceeding cannot be requested.

Below is a brief summary of the adjudicative proceeding process. For the purpose of this summary, the responsibilities of the department are separated into those actions required of the region and those actions required of Headquarters. The following summary is also written as if the appealable condition was a denial of an access connection request.

1. The region receives an access connection permit application, with fee.
2. The region processes the application and makes a determination that the access connection request will be denied.
3. The region sends to the applicant a written letter denying the access connection. Included in this letter is notification that the applicant has thirty (30) days to request an adjudicative proceeding if the applicant disagrees with the region's denial decision. The region must notify affected property owners, permit holders, business owners, tenants, lessees, and emergency services, as appropriate.
4. The applicant, within thirty (30) days, requests an adjudicative proceeding.
5. The region reviews its initial denial decision and determines if there is any additional information presented that justifies reversing the original decision.
6. If the region determines that the original denial decision will stand, the region then forwards copies of all applicable permit documentation to the Access and Hearings Manager (AHM) at Headquarters for review and processing.
7. The AHM reviews the permit application and, if need be, consults the Attorney General's (AG) office for advice and direction.

8. If the initial findings of the AHM agree with the region's denial decision, Headquarters sends to the applicant a written letter, with the signature of the State Design Engineer, informing the applicant that a hearing will be set up for the applicant to attend and appeal in person the department's decision to deny access.
9. The region reserves a location and obtains a court reporter, while Headquarters obtains an Administrative Law Judge (ALJ) to conduct the proceeding. Headquarters, by written letter with the State Design Engineer's signature, notifies the applicant of the time and place for the hearing. The department has ninety (90) days from receipt of the applicant's appeal to approve or deny the appeal application, schedule a hearing, or decide not to conduct a hearing. The actual hearing date can be set beyond this ninety (90) day review period.
10. The region's AG leads the department's presentation and works with both the region and the AHM regarding who will testify and what displays and other information will be presented to the ALJ (note: the AHM will typically not attend these proceedings).
11. After hearing all the facts, the ALJ issues a decision, usually within a couple of weeks after the proceedings. However, the ALJ has ninety (90) days in which to serve a written Initial Order, stating the decision.
12. The ALJ's decision is final unless the applicant, or the department through the AHM, decides to appeal the ALJ's decision to the State Design Engineer. This second appeal must occur within twenty (20) days of the ALJ's written decision.
13. If appealed to the State Design Engineer, the State Design Engineer has ninety (90) days to review the Initial Order, and all the facts and supporting documentation, and issue a Final Order. The review by the State Design Engineer does not require the applicable parties to be present and may involve only a review of the material submitted at the adjudicative proceeding.
14. The State Design Engineer's decision is final unless appealed within thirty (30) days to the Washington State Superior Court.

The above represents a general timeline if all appeals are pursued. Based on the above timelines it can take nearly a year before a Final Order is issued. If appealed to Superior Court, up to an additional 18 months can be added to the process. In any case, contact the region's Development Services Engineer for further guidance and direction if an appeal might be coming.

1435.11 Documentation

A list of the documents that are to be preserved [in the Design Documentation Package (DDP) or the Project File (PF)] is on the following website: http://www.wsdot.wa.gov/eesc/design/projectdev/

Class	Noncon-forming	Variance	Conforming	Access Point Spacing **	Limitations
Class 1 Mobility is the primary function	Yes*	No	No	1320’	1 access connection only to contiguous parcels under same ownership Private access connection is not allowed unless no other reasonable access exists. (Must use public road/street system if possible.)
Class 2 Mobility favored over access	Yes*	Yes*	No	660’	1 access connection only to contiguous parcels under same ownership unless frontage >1320’ Private access connection is not allowed unless no other reasonable access exists. (Must use public road/street system if possible.)
Class 3 Balance between mobility and access in areas with less than maximum build out	Yes	Yes	Yes	330’	1 access connection only to contiguous parcels under same ownership. Joint access connection for subdivisions preferred, but private access connection allowed with acceptable justification.
Class 4 Balance between mobility and access in areas with less than maximum build out	Yes	Yes	Yes	250’	1 access connection only to contiguous parcels under same ownership except with acceptable justification.
Class 5 Access needs may have priority over through mobility needs	Yes	Yes	Yes	125’	More than 1 access connection per ownership allowed with acceptable justification.

* The access connection continues only until such time when other reasonable access to a highway with a less restrictive class or acceptable access to the public road/street system becomes available and is allowed.
** Minimum, on the same side of the highway.

Managed Access Highway Class Description
Figure 1435-3

1460.01 General
1460.02 References
1460.03 Design Criteria
1460.04 Fencing Types
1460.05 Gates
1460.06 Procedure
1460.07 Documentation

1460.01 General

Fencing is provided primarily to discourage encroachment onto the Washington State Department of Transportation's (WSDOT's) highway right of way from adjacent property and to delineate the right of way. It is also used to replace fencing that has been disrupted by construction and to discourage encroachment onto adjacent property from the highway right of way.

The reason for discouraging encroachment onto the right of way is to limit the presence of people and animals that might disrupt the efficient flow of traffic on the facility. Although not the primary intent, fencing does provide some form of separation between people, animals, the traffic flow, or other special feature and, therefore, a small measure of protection for each.

1460.02 References

*Plans Preparation Manua*l, M 22-31, WSDOT

Roadside Manual, M 25-30, WSDOT

Standard Plans for Road, Bridge, and Municipal Construction (Standard Plans), M 21-01, WSDOT

Standard Specifications for Road, Bridge, and Municipal Construction (Standard Specifications), M 41-10, WSDOT

1460.03 Design Criteria

(1) General

Fencing on a continuous alignment usually has a pleasing appearance and is most economical to construct and maintain. The recommended practice is to locate fencing or, depending on terrain, 12 in. inside the right of way line.

Where the anticipated or existing right of way line has abrupt irregularities over short distances, coordinate with Maintenance and Real Estate Services personnel to dispose of the irregularities as excess property, where possible, and fence the final property line in a manner that is acceptable to Maintenance.

Where possible, preserve the natural assets of the surrounding area and minimize the number of fence types on any particular project.

(2) Limited Access Highways

On highways with limited access control, fencing is mandatory unless it has been established that such fencing may be deferred. Fencing is required between frontage roads and adjacent parking or pedestrian areas (such as at rest areas and flyer stops) and highway lanes or ramps unless other barriers are used to discourage access violations.

On new alignment in rural areas, fencing is not provided between the frontage road and abutting property unless the abutting property was enclosed prior to highway construction. Such fencing is normally part of the right of way negotiation.

Unless there is a possibility of access control violation, fencing installation may be deferred until needed at the following locations. (When in doubt, consult the Headquarters (HQ) Access and Hearings Engineer.)

- Areas where rough topography or dense vegetation provides a natural barrier.
- Along rivers or other natural bodies of water.
- In sagebrush country that is sparsely settled.
- In areas with high snowfall levels and sparse population.
- On long sections of undeveloped public or private lands not previously fenced.

(3) Managed Access Highways

Fencing is not required for managed access highways. When highway construction will destroy the fence of an abutting property owner, originally constructed on private property, the cost of such replacement fencing may be included in the right of way payment. When the fences of several property owners will be impacted, it may be cost-effective to replace the fences as part of the project.

If fencing is essential to safe operation of the highway, it will be constructed and maintained by the state. Examples of this are the separation of traveled highway lanes and adjacent facilities with parking or pedestrian areas such as rest areas and flyer stops.

(4) Special Sites

Fencing is often needed at special sites such as pit sites, stockpiles, borrow areas, and storm water detention facilities.

It is recommended that storm water detention facilities and wetland mitigation sites be fenced if all of the following conditions exist:

- The storm water detention facility or wetland mitigation site is outside highway right of way fencing.
- The slopes into the storm water detention facility or wetland mitigation site are 3H:1V or steeper.
- The storm water detention facility or wetland mitigation site is located near a school, park, trail, or other facility frequented by children not accompanied by an adult.

Fencing proposed at sites that will be outside WSDOT right of way requires that local ordinances be followed if they are more stringent than WSDOT's.

Fencing is not installed around storm water detention ponds within right of way fencing.

Other special sites where fencing may be required are addressed in the following chapters:

- 1020 Bicycle Facilities
- 1025 Pedestrian Design Considerations
- 1120 Bridges

The type and configuration of the fence is determined by the requirements of each situation.

1460.04 Fencing Types

(1) Chain Link

Installation of chain link fence is appropriate for maximum protection against right of way encroachment on sections of high volume highways under the following conditions:

- Along an existing business district adjacent to a freeway.
- Between a freeway and an adjacent parallel city street.
- At locations where existing streets have been cut off by freeway construction.
- At industrial areas.
- At large residential developments.
- At military reservations.
- At schools and colleges.
- At recreational and athletic areas.
- At developed areas at the intersection of two limited access highways.
- At any other location where a barrier is needed to protect against pedestrian, bicyclist, or livestock encroachment in limited access areas.
- See Chapter 640 for roadway sections in rock cuts.

The Standard Plans contains details for the four approved types of chain link fence. The recommended uses for each type of fence are as follows:

(a) **Type 1.** A high fence for areas of intensified use, such as industrial areas, or school playgrounds. It is not to be used within the Design Clear Zone because the top rail of the fence is considered a hazard. (See Chapter 700.)

(b) **Type 3.** A high fence for use in suburban areas with limited existing development. It may be used within the Design Clear Zone.

(c) **Type 4.** A lower fence for special use, such as between the traveled highway lanes and a rest area or flyer stop, or as a rest area boundary fence if required by the development of the surrounding area. This fence may be used along a bike path or hiking trail to separate it from an adjacent roadway.

(d) **Type 6.** A lower fence used instead of Type 1 where it is deemed important not to obstruct the view toward or from areas adjacent to the highway. This fence is not to be used within the Design Clear Zone because the top rail of the fence is considered a hazard. (See Chapter 700.)

Coated galvanized chain link fence is available in various colors and may be considered in areas where aesthetic considerations are important. Coated ungalvanized chain link fence is not recommended.

(2) Wire Fencing

The Standard Plans and Standard Specifications contain details for the two approved types of wire fence. The recommended uses for each type of fence are as follows:

(a) **Type 1.** This fence is used in urban and suburban areas where improvements along the right of way are infrequent and future development is not anticipated. It may also be used adjacent to livestock grazing areas. The lower portion of this fence is wire mesh and provides a barrier to children and small animals.

(b) **Type 2.** This fence is used in farming areas to limit highway crossings by farm vehicles to designated approaches: in irrigation districts to prevent ditch riders, maintenance personnel, and farmers from making unauthorized highway crossings; and where new alignment crosses parcels previously enclosed by barbed wire.

(3) Other Considerations

Extremely tall fences (7 to 10 ft high) may be used in areas where there are exceptional hazards such as large concentrations of deer or elk. See the region's Environmental Office and the *Roadside Manual* concerning wildlife management.

Metal fencing can interfere with airport traffic control radar. When locating fencing in the vicinity of an airport, contact the Federal Aviation Administration to determine if metal fence will create radar interference at the airport. If so, use nonmetallic fencing.

Do not straddle or obstruct surveying monuments.

1460.05 Gates

Keep the number of fence gates along limited access highways to a minimum. On limited access highways, all new gates must be approved as described in Chapter 1425, "Access Point Decision Report."

Usually such gates are necessary only to allow highway maintenance personnel and operating equipment to reach the freeway border areas without using the through-traffic roadway. Gates may be needed to provide access to utility supports, manholes, and the like, located within the right of way.

Use gates of the same type as the particular fence, and provide locks to deter unauthorized use.

In highly developed and landscaped areas where maintenance equipment is parked outside the fence, provide the double gate indicated in the Standard Plans.

Where continuous fencing is not provided on limited access highways, Type C approaches are normally gated and locked, with a short section of fence on both sides of the gate.

1460.06 Procedure

Fencing is included in the access report, in accordance with Chapter 1430, and the PS&E, in accordance with the *Plans Preparation Manual*.

1460.07 Documentation

A list of documents that are to be preserved [in the Design Documentation Package (DDP) or the Project File (PF)] is on the following website: http://www.wsdot.wa.gov/eesc/design/projectdev/

Washington State Department of Transportation

Design Manual Supplement

Effective Date: July 22, 2003

State Design Engineer

Urban Roadways

I. Introduction

A. Purpose

To modify the Washington State Department of Transportation (WSDOT) design criteria for roadways in urban areas.

B. References

RCW 47.50, Highway Access Management

RCW 46.51.575, Additional parking regulations

RCW 46.61.150, Driving on divided highways.

WAC 468-51, Highway Access Management — Access Permits — Administrative Process

WAC 468-52, Highway Access Management — Access Control Classification System and Standards

Design Manual, M 22-01, WSDOT

C. Background

In the urban environment, development has limited the space available for all of the competing roadway needs such as lanes for capacity, shoulders, medians, sidewalks, and parking. Because of this, providing roadways that meet full design level in developed areas is often difficult.

Roadway design guidance developed for rural and limited access highways is not always appropriate for urban roadways. The existing guidance provides for higher design speeds; with wider lanes, shoulders, and medians than necessary for the developed urban environment. This has resulted in a higher level of design at a higher project cost.

D. Discussion

1. Design Speed

The design speed is the speed used to determine the various geometric design features of the roadway. Sight distance, superelevation, and maximum grade are the main design elements that depend on the design speed. A uniform design speed throughout a corridor provides consistent features that produce acceptable operating speeds.

The existing full design level design speed guidance does not fully account for roadside development. Before May 2001, the design speed could be selected

from a range of speeds. The May 2001 *Design Manual* revision to Chapter 440 removed the lower end of the range leaving the required design speed as the high end of the range. This removed the designer's ability to select a design speed appropriate for the development in the area. The required design speeds are frequently higher than necessary for the conditions in urban areas.

Design speed is revised to restore the minimum design speeds values removed May 2001. A corridor analysis may be used to select an appropriate design speed for the roadway setting, with the posted speed as the minimum.

2. Lane Width

Lane width has an influence on safety, comfort, and capacity. Lanes 12 ft wide provide desirable clearance between large vehicles for safety and comfort. They also provide full capacity. Narrower lanes will have an adverse impact on the traffic flow. However, 11 ft lanes provide minimum clearance and the added benefit to traffic for wider lanes in developed urban areas is often less than the additional cost.

For roadways on the NHS, 12 ft lanes are preferred. For non NHS managed access highways, the minimum lane width is reduced to 11 ft, except when truck volumes and speeds are high.

3. Shoulder

There are many functions of a shoulder along the traveled way. In an urban environment the benefits that shoulders provide include:

- Separation from curbs to reduce driver shifting (shy distance)
- Improved capacity
- Areas for bike and pedestrian use
- Room for large vehicle tracking for turning movements

Before May 2001, when curb section was used the WSDOT *Design Manual* said, "… a 6 ft shoulder outside the face of curb is acceptable. See Chapter 910 for shy distances at curbs." Chapter 910, "Intersections at Grade" called for a 1 ft shy on the left with 11 ft or wider lanes and 2 ft on the right. Except, on the right, "For noncontinuous curbs or where bicycles are anticipated, the minimum shy distance to the face of the curb is 3 ft." This often resulted in confusion and the 6 ft requirement not being met.

With the May 2001 revision to the *Design Manual*, the terminology for this area was changed from "shy distance" to "shoulder" and the guidance was moved to Chapter 440, "Full Design Level". At the same time, the right shoulder width requirement increased to 4 ft to provide more room for bicyclists. The left shoulder width requirement was revised to provide a lane/shoulder width of 13 ft when the Design Speed is less than 50 mph. These criteria have been shown to be impractical for many of the projects being developed in urban areas.

For turn lanes, because traffic speeds and volumes are low, the need for shoulders is reduced to providing structural support and room for bike and pedestrian use. Where adjacent curb and sidewalk are provided, the need for shoulders adjacent to the turn-lane is eliminated.

The shoulder width for urban managed access highways is changed to be more practical in developed areas.

4. Median

A median is the portion of a highway separating the traveled ways for traffic in opposite directions. Medians separate opposing traffic streams, provide space for left turn lanes, control left turns, minimize headlight glare, and provide space for landscaping and storm water treatment.

Medians used on urban managed access highways have not been fully addressed in the *Design Manual*. The manual has covered medians commonly used in rural areas (depressed) and limited access highways in urban areas (barrier separated), but raised medians, which are common in urban areas, have not been included.

Guidance is added for medians on managed access highways in urban areas.

5. Superelevation

In urban areas, roadside development often makes superelevation impractical. To allow for this, AASHTO provides a different method for calculating superelevation with higher allowable side friction for low-speed urban roadways. The result is a reduction in the minimum radius for normal crown and a reduction in minimum radius at full superelevation. The low-speed urban roadway superelevation has not previously been included in the *Design Manual*. To allow more flexibility on low-speed urban managed access highways, the AASHTO low-speed urban roadway superelevation is adopted for urban managed access highways.

E. Implementation

This change is effective on the date of this supplement and will expire when the changes are incorporated in the *Design Manual*.

II. Instructions

A. Replace note 3, Figure 430-3 and note 4, Figure 430-4 with the following:

When curb section is used, the minimum shoulder width from the edge of traveled way to the face of curb is 4 ft. In urban areas, see Chapter 440. On designated bicycle routes, the minimum shoulder width is 4 ft (See Chapter 1020).

B. Replace the last paragraph of 440.07 with the following:

Select a design speed for urban arterial streets and highways with some access control and fairly long distances between intersections as discussed above. For highways in urban areas, see 440.16(3) for design speed determination.

C. Add the attached new 440.16 "Urban Roadways" to the end of Chapter 440. (Pages 5-7.)

D. Replace existing Figures 440-4 through 440-7b with the attached revised Figures. 440-4 through 440-8. (Pages 8-15)

E. Add the following to 640.05 "Superelevation".

(6) Low-Speed Urban Managed Access Highway Superelevation

Curves on low-speed Urban Managed Access Highways may be superelevated using a higher side friction. Figure 640-12b may be used to determine superelevation for Urban Managed Access Highways with a design speed of 40 mph or less.

F. Add new Figure 640-12b to Chapter 640. (Page 16)

440.16 Urban Roadways

(1) Definitions

divided multilane A roadway with 4 or more lanes and a median that physically or legally prohibits left-turns, except at designated locations.

limited access highway All highways where the rights of direct access to or from abutting lands have been acquired from the abutting landowners.

managed access highway All highways where the rights of direct access to or from abutting lands have not been acquired from the abutting landowners.

median The portion of a highway separating the traveled ways for traffic in opposite directions.

rural area An area that meets none of the conditions to be an urban area.

suburban area A term for the area at the boundary of an urban area. Suburban settings may combine higher speeds common in rural areas with activities that are more similar to urban settings. Separate design values are not given for suburban areas, classify suburban areas as either urban or rural as best fits the existing or design year conditions.

two-way left-turn lanes (TWLTL) A lane, located between opposing lanes of traffic, to be used by vehicles making left turns from either direction, either from or onto the roadway.

undivided multilane A roadway with 4 or more lanes on which left-turns are not controlled.

urban area An area defined by one or more of the following:

- Within a federal urban area boundary as designated by FHWA.
- Characterized by intensive use of the land for the location of structures and receiving such urban services as sewer, water, and other public utilities and services normally associated with urbanized areas.
- With not more than twenty-five percent undeveloped land.

(2) Design Class

The design class of limited access highways on the state system in urban areas is controlled by the functional class (See Figures 440-4 through 7b.)

The urban managed access highway design class (Figure 440-8) may be used on all managed access highways in urban areas, regardless of the functional class.

(3) Design Speed

For limited access facilities, the design speed is given for each design class in Figures 440-4 through 7b.

For access managed facilities in urban areas, select a design speed based on figure 440-1. In cases where the 440-1 design speed does not fit the conditions, a corridor analysis may be used to select a design speed. Select a design speed not less than the posted speed and logical with respect to topography, operating speed (or anticipated operating speed for new alignment), adjacent land use, design traffic volume, accident history, access control, and the functional classification. Consider both year of construction and design year. Maintain continuity throughout the corridor, with changes at logical points, such as a change in roadside development.

(4) Lanes

Figure 440-8 gives the minimum lane widths for urban managed access highways. See Chapter 640 for guidance on width requirements on turning roadways. The width for two-way two-lane turning roadways and two-lane one-way turning roadways given in the figures in Chapter 640 are based on 12 ft minimum lane widths. When 11 ft minimum lane widths are used, the widths from the figures may be reduced by 2 ft.

(5) Shoulders

Figure 440-8 gives the minimum shoulder widths for urban managed access highways without curb. When a curb section with a height of 8 in or less is used, the minimum shoulder width is given in Figure 440-3a. When a curb or barrier with a height between 8 in and 2 ft is used adjacent to the roadway, the minimum shoulder width is 2 ft. When traffic barrier with a height of 2 ft or greater is used adjacent to the roadway, the minimum shoulder width from the edge of traveled way to the face of the traffic barrier is 4 ft. Additional shy distance for traffic barrier is not normally required on urban managed access highways.

Lane Width	Posted Speed			
	>45 mph	≤45 mph	>45 mph	≤45 mph
	On Left		On Right (2)	
12 ft or wider	4 ft	1 ft (1)	4 ft	2 ft
11 ft	4 ft	1 ft (1)	4 ft	3 ft (3)

Notes:

(1) When mountable curb is used on routes with a posted speed of 35 mph or less, shoulder width is desirable but, with justification, curb may be placed at the edge of traveled way.

(2) When the route has been identified as a local, state, or regional significant bike route, the minimum shoulder width is 4 ft. See Chapter 1020 for additional bicycle considerations.

(3) When bikes are not a consideration, may be reduced to 2 ft with justification.

(4) Measured from the edge of traveled way to the face of the curb.

Shoulder Width for Curbed Sections (4) - Urban
Figure 440-3a

Where there are no sidewalks the minimum shoulder width is 4 ft. Shoulder widths less than 4 ft will require wheelchairs using the roadway to encroach on the through lane.

The need for shoulders adjacent to turn lanes, on urban managed access highways, is reduced. For roadways without curb sections, the shoulder adjacent to turn lanes may be reduced to 2 ft on the left and 4 ft on the right. When a curb and sidewalk section is used with a turn lane 400 ft or less in length, the shoulders adjacent to turn lanes may be eliminated. The design of the intersection may need to be adjusted to allow for vehicle tracking. On routes where bicycles are provided for, continue the bicycle facility between

the turn lane and the through lane. (See Chapter 910 for information on turn lanes and Chapter 1020 for information on bicycle facilities.)

For routes identified as local, state, or regional significant bicycle routes, provide a minimum 4 ft shoulder. Maintain system consistence for the bicycle route, regardless of jurisdiction and functional class. See Chapter 1020 for additional information on bicycle facilities.

(6) Medians

Medians are either restrictive or nonrestrictive. Restrictive medians limit left-turns, physically or legally, to defined locations. Nonrestrictive medians allow left-turns at any point along the route. Consider restrictive medians when the DHV is over 2000.

A common form of restrictive median in urban areas is the raised median. When the median is to be landscaped or where rigid objects are to be placed in the median, see *Design Manual* Chapter 700 for clear zone requirements. The width of a raised median may be minimized by using a dual-faced cement concrete traffic curb, a precast traffic curb, or an extruded curb.

A two-way left-turn lane (TWLTL) may be used as a nonrestrictive median for an undivided roadway with a DHV of 2500 or less. The desirable width of a TWLTL is 13 ft with a minimum width of 11 ft. (See Chapter 910 for additional information.)

The traffic volume limits for restrictive medians and TWLTLs are based on WAC 468-52. For more exact values, see the WAC.

(7) Parking

Parallel parking may be permitted on urban managed access highways as shown on Figure 440-8. The widths given are minimum. Provide wider widths when practical.

Angle parking is not permitted on any federal aid or state route without approval by WSDOT (RCW 46.61.575). For state routes, this approval is with a deviation. Provide an engineering study, approved by the region's Traffic Engineer, with the deviation that shows the parking will not unduly reduce safety and that the roadway is of sufficient width that the parking will not interfere with the normal movement of traffic.

	Divided Multilane	
Design Class	I-1	
Design Year	(1)	
Access Control (2)	Full	
Separate Cross Traffic Highways Railroads	 All All	
Design Speed (mph) Rural Urban	 80 (3) 70 (4)	
Traffic Lanes Number Width (ft)	 4 or more divided 12	
Median Width (ft)	4 lane	6 lanes or more
Rural —Minimum (5) Urban —Minimum	40 16	50 22
Shoulder Width (ft) Right of Traffic Left of Traffic	 10 (6) 4	 10 (6) 10 (6)(7)
Pavement Type (8)	High	
Right of Way (9) Rural — Minimum Width (ft) Urban — Minimum Width (ft)	 63 from edge of traveled way As required (10)	
Structures Width (ft) (11)	Full roadway width each direction (12)	

	Design Speed (mph)			
Type of Terrain	50	60	70	80
Level	4	3	3	3
Rolling	5	4	4	4
Mountainous	6	6	5	5

Grades (%) (13)

Interstate Notes:

(1) The design year is 20 years after the year the construction is scheduled to begin.

(2) See Chapter 1420 for access control requirements.

(3) 80 mph is the desirable design speed; with a corridor analysis, the design speed may be reduced to 60 mph in mountainous terrain and 70 mph in rolling terrain. Do not select a design speed that is less than the posted speed.

(4) 70 mph is the desirable design speed; in urban areas, with a corridor analysis the design speed may be reduced to 50 mph. Do not select a design speed that is less than the posted speed.

(5) Independent alignment and grade is desirable in all rural areas and where terrain and development permits in urban areas.

(6) 12 ft shoulders are desirable when the truck DDHV is 250 or greater.

(7) For existing 6-lane roadways, existing 6 ft left shoulders may remain when no other widening is required with design exception documentation.

(8) Submit Form 223-528, Pavement Type Determination.

(9) Provide right of way width 10 ft desirable, 5 ft minimum, wider than the slope stake for fill and slope treatment for cut. See Chapter 640 and the Standard Plans for slope treatment information.

(10) In urban areas, make right of way widths not less than those required for necessary cross section elements.

(11) See Chapter 1120 for minimum vertical clearance.

(12) For median widths 26 ft or less, address bridge(s) in accordance with Chapter 1120.

(13) Grades 1% steeper may be used in urban areas where development precludes the use of flatter grades and for one-way down grades except in mountainous terrain.

Geometric Design Data, Interstate
Figure 440-4

Design Class	Divided Multilane				Two-Lane						Undivided Multilane	
	P-1		P-2		P-3		P-4		P-5		P-6 (1)	
	Rural	Urban	Rural	Urban	Rural	Urban	Rural	Urban	Rural	Urban	Rural	Urban
DHV in Design Year (2) NHS **Non NHS**	Over 1,500		Over 700		Over 201 (3) Over 301		61-200 (4) 101-300		60 and under 100 and Under		Over 700	
Access Control	Full (5)		Partial (5)		(5)		(5)		(5)		(5)	
Separate Cross Traffic **Highways** **Railroads** (6)	 All All		 Where Justified All		 Where Justified All (7)		 Where Justified Where Justified (8)		 Where Justified Where Justified (8)		 Where Justified Where Justified (8)	
Design Speed (mph) (9)	70		70		70	60	70	60	60	60	70	60
Minimum (10)(11)	50		50		50	40	50	40	40	30	40	30
Traffic Lanes **Number** **Width (ft)**	 4 or more divided 12		 4 or 6 divided 12		 2 12		 2 12		 2 12		 4 12	 4 or 6 11 (12)
Shoulder Width (ft) **Right of Traffic** **Left of Traffic**	 10 (13) Variable (15)		 10 Variable (15)		 8		 6		 4		 8	 8(14)
Median Width (ft) **4 lane** **6 or more lanes**	 40 (16) 48 (16)	 16 22	 60 60	 16 22							 4 4	 2 (17) 2 (17)
Parking Lanes Width (ft) — Minimum	None		None		None		None	10	None	10	None	10 (18)
Pavement Type (19)	High				High or intermediate							
Right of Way (20) — Min Width (ft)	(21)	(22)	(21)	(22)	120	80	120	80	100	80	150	80
Structures Width (ft) (23)	Full roadway width (24)				40		36		32		Full roadway width	
Other Design Considerations-Urban					(25)		(25)		(25)		(25)	

Type of Terrain	Rural — Design Speed (mph)					Urban — Design Speed (mph)			
	40	50	60	70	80	30	40	50	60 (26)
Level	5	4	3	3	3	8	7	6	5
Rolling	6	5	4	4	4	9	8	7	6
Mountainous	8	7	6	5	5	11	10	9	8

Grades (%) (27)

Geometric Design Data, Principal Arterial
Figure 440-5a

Principal Arterial Notes:

(1) Justify the selection of a P-6 design class on limited access highways.
(2) The design year is 20 years after the year the construction is scheduled to begin.
(3) Where DHV exceeds 700, consider four lanes. When the volume/capacity ratio is equal to or exceeds 0.75, consider the needs for a future four-lane facility. When considering truck climbing lanes on a P-3 design class highway, perform an investigation to determine if a P-2 design class highway is justified.
(4) When considering a multilane highway, perform an investigation to determine if a truck climbing lane or passing lane will satisfy the need. See Chapter 1010.
(5) See Chapter 1420 and the Master Plan for Limited Access Highways for access control requirements. Contact the HQ Design Office Access & Hearings Unit for additional information.
(6) Contact the Rail Office of the Public Transportation and Rail Division for input on the needs for the railroad.
(7) All main line and major-spur railroad tracks will be separated. Consider allowing at-grade crossings at minor-spur railroad tracks.
(8) Criteria for railroad grade separations are not clearly definable. Evaluate each site regarding the hazard potential. Provide justification for railroad grade separations.
(9) These are the design speeds for level and rolling terrain in rural areas. They are the preferred design speeds for mountainous terrain and urban areas. Higher design speeds may be selected, with justification.
(10) In urban areas, with a corridor analysis these values may be used as the minimum design speed. Do not select a design speed that is less than the posted speed.
(11) These design speeds may be selected in mountainous terrain, with a corridor analysis. Do not select a design speed that is less than the posted speed.
(12) 12 ft lanes are required when the truck DDHV is 150 or greater.
(13) 12 ft shoulders are desirable when the truck DDHV is 250 or greater.
(14) When curb section is used, the minimum shoulder width from the edge of traveled way to the face of curb is 4 ft.
(15) Minimum left shoulder width is to be as follows: four lanes — 4 ft: six or more lanes — 10 ft. For 6-lane roadways, existing 6 ft left shoulders may remain when no other widening is required.
(16) On freeways or expressways requiring less than eight lanes within the 20-year design period, provide sufficient median or lateral clearance and right of way to permit addition of a lane in each direction if required by traffic increase after the 20-year period.
(17) When signing is required in the median of a six-lane section, the minimum width is 6 ft. If barrier is to be installed at a future date, an 8 ft minimum median is required.
(18) Restrict parking when DHV is over 1500.
(19) Submit Form 223-528, Pavement Type Determination.
(20) Provide right of way width 10 ft desirable, 5 ft minimum, wider than the slope stake for fill and slope treatment for cut. See Chapter 640 and the Standard Plans for slope treatment information.
(21) 63 ft from edge of traveled way.
(22) Make right of way widths not less than those required for necessary cross section elements.
(23) See Chapter 1120 for the minimum vertical clearance.
(24) For median widths 26 ft or less, address bridges in accordance with Chapter 1120.
(25) For bicycle requirements, see Chapter 1020. For pedestrian and sidewalk requirements, see Chapter 1025. Curb requirements are in 440.11. Lateral clearances from the face of curb to obstruction are in Chapter 700.
(26) For grades at design speeds grater than 60 mph in urban areas, use rural criteria.
(27) Except in mountainous terrain, grades 1% steeper may be used in urban areas where development precludes the use of flatter grades or for one-way downgrades.

Geometric Design Data, Principal Arterial
Figure 440-5b

Design Class	Divided Multilane		Two-Lane						Undivided Multilane	
	M-1		M-2		M-3		M-4		M-5 (1)	
	Rural	Urban	Rural	Urban	Rural	Urban	Rural	Urban	Rural	Urban
DHV in Design Year (2) NHS Non NHS	Over 700		Over 201 (3) Over 401		61-200 (4) 201-400		60 and Under 200 and Under		Over 700	
Access Control	Partial (5)		(5)		(5)		(5)		(5)	
Separate Cross Traffic Highways Railroads (6)	Where Justified All		Where Justified All (7)		Where Justified Where Justified (8)		Where Justified Where Justified (8)		Where Justified Where Justified (8)	
Design Speed (mph) (9) **Minimum** (10)(11)	70 50		70 50	60 40	70 50	60 40	60 40	60 30	70 40	60 30
Traffic Lanes Number Width (ft)	4 or 6 divided 12		2 12		2 12		2 12		4 12	4 or 6 11 (12)
Shoulder Width (ft) Right of Traffic Left of Traffic	10 Variable (14)		8		6		4		8	8 (13)
Median Width (ft) 4 lane 6 lane	60 60	16 22							4	2 (15)
Parking Lanes Width (ft) — Minimum	None		None		None	10	None	10	None	10 (16)
Pavement Type (17)	High		As required						High or Intermediate	
Right of Way (18) — Min Width (ft)	(19)	(20)	120	80	120	80	100	80	150	80
Structures (ft) (21)	Full Roadway Width (22)		40		36		32		Full Roadway Width	
Other Design Considerations-Urban			(23)		(23)		(23)		(23)	

Type of Terrain	Rural — Design Speed (mph)					Urban — Design Speed (mph)			
	40	50	60	70	80	30	40	50	60 (24)
Level	5	4	3	3	3	8	7	6	5
Rolling	6	5	4	4	4	9	8	7	6
Mountainous	8	7	6	5	5	11	10	9	8

Grades (%) (25)

Geometric Design Data, Minor Arterial
Figure 440-6a

Minor Arterial Notes:

(1) Justify the selection of an M-5 design class on limited access highways.
(2) The design year is 20 years after the year the construction is scheduled to begin.
(3) Where DHV exceeds 700, consider four lanes. When the volume/capacity ratio is equal to or exceeds 0.75, consider the needs for a future four-lane facility. When considering truck climbing lanes on an M-2 design class highway, perform an investigation to determine if an M-1 design class highway is justified.
(4) When considering a multilane highway, perform an investigation to determine if a truck climbing lane or passing lane will satisfy the need. See Chapter 1010.
(5) See Chapter 1420 and the Master Plan for Limited Access Highways for access control requirements. Contact the HQ Design Office Access & Hearings Unit for additional information.
(6) Contact the Rail Office of the Public Transportation and Rail Division for input on the needs for the railroad.
(7) All main line and major-spur railroad tracks will be separated. Consider allowing at-grade crossings at minor-spur railroad tracks.
(8) Criteria for railroad grade separations are not clearly definable. Evaluate each site regarding the hazard potential. Provide justification for railroad grade separations.
(9) These are the design speeds for level and rolling terrain in rural areas. They are the preferred design speeds for mountainous terrain and urban areas. Higher design speeds may be selected, with justification.
(10) In urban areas, with a corridor analysis these values may be used as the minimum design speed. Do not select a design speed that is less than the posted speed.
(11) These design speeds may be selected in mountainous terrain, with a corridor analysis. Do not select a design speed that is less than the posted speed.
(12) When the truck DDHV is 150 or greater, consider 12 ft lanes.
(13) When curb section is used, the minimum shoulder width from the edge of traveled way to the face of curb is 4 ft.
(14) The minimum left shoulder width is 4 ft for four lanes and 10 ft for six or more lanes. For 6-lane roadways, existing 6 ft left shoulders may remain when no other widening is required.
(15) When signing is required in the median of a six-lane section, the minimum width is 6 ft. If barrier is to be installed at a future date, an 8 ft minimum median is required.
(16) Restrict parking when DHV is over 1500.
(17) Submit Form 223-528, Pavement Type Determination.
(18) Provide right of way width 10 ft desirable, 5 ft minimum, wider than the slope stake for fill and slope treatment for cut. See Chapter 640 and the Standard Plans for slope treatment information.
(19) 63 ft from edge of traveled way
(20) Make right of way widths not less than those required for necessary cross section elements.
(21) See Chapter 1120 for the minimum vertical clearance.
(22) For median widths 26 ft or less, address bridges in accordance with Chapter 1120.
(23) For bicycle requirements, see Chapter 1020. For pedestrian and sidewalk requirements see Chapter 1025. Curb requirements are in 440.11. Lateral clearances from the face of curb to obstruction are in Chapter 700.
(24) For grades at design speeds grater than 60 mph in urban areas, use rural criteria.
(25) Except in mountainous terrain, grades 1% steeper may be used in urban areas where development precludes the use of flatter grades or for one-way downgrades.

Geometric Design Data, Minor Arterial
Figure 440-6b

Design Class	Undivided Multilane		Two-Lane					
	C-1		C-2		C-3		C-4	
	Rural	Urban	Rural	Urban	Rural	Urban	Rural	Urban
DHV in Design Year (1) NHS Non NHS	Over 900		Over 301 (2) Over 501		201-300 (3) 301-500		200 and under 300 and Under	
Access Control	(4)		(4)		(4)		(4)	
Separate Cross Traffic Highways Railroads (5)	Where Justified Where Justified (6)		Where Justified All (6)		Where Justified Where Justified (6)		Where Justified Where Justified (6)	
Design Speed (mph) (7) **Minimum** (8)(9)	70 40	60 30	70 50	60 40	70 50	60 40	60 40	60 30
Traffic Lanes Number Width (ft)	4 12	4 or 6 11 (10)	2 12		2 12		2 12	
Shoulder Width (ft)	8	8 (11)	8		6		4	
Median Width — Minimum (ft)	4	2 (12)						
Parking Lanes Width (ft) — Minimum	None	10	None		None	10	None	10
Pavement Type (13)	High or Intermediate		As required					
Right of Way (ft) (14)	150	80	120	80	120	80	100	80
Structures Width (ft) (15)	Full Roadway Width		40		36		32	
Other Design Considerations-Urban	(16)		(16)		(16)		(16)	

Type of Terrain	Rural — Design Speed (mph)					Urban — Design Speed (mph)			
	30	40	50	60	70	30	40	50	60 (17)
Level	7	7	6	5	4	9	9	7	6
Rolling	9	8	7	6	5	11	10	8	7
Mountainous	10	10	9	8	6	12	12	10	9

Grades (%) (18)

Geometric Design Data, Collector
Figure 440-7a

Collector Notes:

(1) The design year is 20 years after the year the construction is scheduled to begin.

(2) Where DHV exceeds 900, consider four lanes. When the volume/capacity ratio is equal to or exceeds 0.85, consider the needs for a future four-lane facility. When considering truck climbing lanes on a C-2 design class highway, perform an investigation to determine if a C-1 design class highway is justified.

(3) When considering a multilane highway, perform an investigation to determine if a truck climbing lane or passing lane will satisfy the need. See Chapter 1010.

(4) See Chapter 1420 and the Master Plan for Limited Access Highways for access control requirements. Contact the HQ Design Office Access & Hearings Unit for additional information.

(5) Contact the Rail Office of the Public Transportation and Rail Division for input on the needs for the railroad.

(6) Criteria for railroad grade separations are not clearly definable. Evaluate each site regarding the hazard potential. Provide justification for railroad grade separations.

(7) These are the design speeds for level and rolling terrain in rural areas. They are the preferred design speeds for mountainous terrain and urban areas. Higher design speeds may be selected, with justification. Do not select a design speed that is less than the posted speed.

(8) In urban areas, with a corridor analysis these values may be used as the minimum design speed. Do not select a design speed that is less than the posted speed.

(9) These design speeds may be selected in mountainous terrain, with a corridor analysis. Do not select a design speed that is less than the posted speed.

(10) Consider 12 ft lanes when the truck DHV is 200 or greater.

(11) When curb section is used, the minimum shoulder width from the edge of traveled way to the face of curb is 4 ft.

(12) When signing is required in the median of a six-lane section, the minimum width is 6 ft median. If barrier is to be installed at a future date, an 8 ft minimum median is required.

(13) Submit Form 223-528, Pavement Type Determination.

(14) Provide right of way width 10 ft desirable, 5 ft minimum, wider than the slope stake for fill and slope treatment for cut. See Chapter 640 and the Standard Plans for slope treatment information.

(15) See Chapter 1120 for the minimum vertical clearance.

(16) For bicycle requirements, see Chapter 1020. For pedestrian and sidewalk requirements see Chapter 1025. Curb requirements are in 440.11. Lateral clearances from the face of curb to obstruction are in with Chapter 700.

(17) For grades at design speeds grater than 60 mph in urban areas, use rural criteria.

(18) Except in mountainous terrain, grades 1% steeper may be used in urban areas where development precludes the use of flatter grades or for one-way downgrades.

Geometric Design Data, Collector
Figure 440-7b

Design Class	Divided Multilane		Undivided Multilane		Two-Lane	
	UM/A1	UM/A2	UM/A3	UM/A4	UM/A5	UM/A6
DHV in Design Year (1)	Over 700	Over 700	700 – 2,500	Over 700	All	All
Design Speed (mph)	Greater than 40	40 or less	35 to 40	30 or less	Greater than 40	40 or less
Access	(2)	(2)	(2)	(2)	(2)	(2)
Traffic Lanes						
Number	4 or more	4 or more	4 or more	4 or more	2	2
Width (ft) NHS	12 (3)(4)	12 (3)	12 (3)	12 (3)	12 (3)(6)	12 (3)
Non NHS	11 (4)	11 (5)	11 (5)	11 (5)	11 (6)	11 (7)
Shoulder Width (ft)						
Right of Traffic	10	10 (8)	8 (8)	8 (8)	8 (9) (8)	4 (8)
Left of Traffic	4	4 (8)				
Median Width (ft)	10 (10)	3 (10)(11)	(12)	(12)		
Parking Lane Width (ft)	None	10 (13)	10 (13)	8 (14)	10 (15)	8 (14)
Structures Width (ft) (16)	Full roadway width (17)		Full roadway width		32	30
Other Design Considerations	(18)	(18)	(18)	(18)	(18)	(18)

Urban Managed Access Highways Notes:

(1) The design year is 20 years after the year the construction is scheduled to begin.
(2) The urban managed access highway design is only used on managed access highways. See WAC 468-51 and WAC 468-52.
(3) May be reduced to 11 ft with justification.
(4) Provide 12 ft lanes when truck DDHV is 200 or greater.
(5) Consider 12 ft lanes when truck DDHV is 200 or greater.
(6) Provide 12 ft lanes when truck DHV is 100 or greater.
(7) Consider 12 ft lanes when truck DHV is 100 or greater.
(8) See Figure 440-3a when curb section is used.
(9) When DHV is 300 or less, may be reduced to 6 ft. When DHV is 200 or less, may be reduced to 4 ft.
(10) 12 ft desirable. At left-turn lanes, the minimum median width is 12 ft to accommodate the turn lane.
(11) The minimum median width is 10 ft when median barrier is used.
(12) 2 ft is desirable. When a TWLTL is present 13 ft is desirable, 11 ft is minimum.
(13) Prohibit parking when DHV is over 1500.
(14) 10 ft desirable.
(15) Prohibit parking when DHV is over 500.
(16) See Chapter 1120 for minimum vertical clearance.
(17) See Chapter 1120 for median requirements.
(18) For bicycle requirements, see Chapter 1020. For pedestrian and sidewalk requirements, see Chapter 1025. Lateral clearances from the face of curb to obstruction are in with Chapter 700. For railroad and other roadway grade separation, maximum grade, right of way requirements, and pavement type for the functional class, see Figures 440-5a through 7b

Geometric Design Data, Urban Managed Access Highways
Figure 440-8

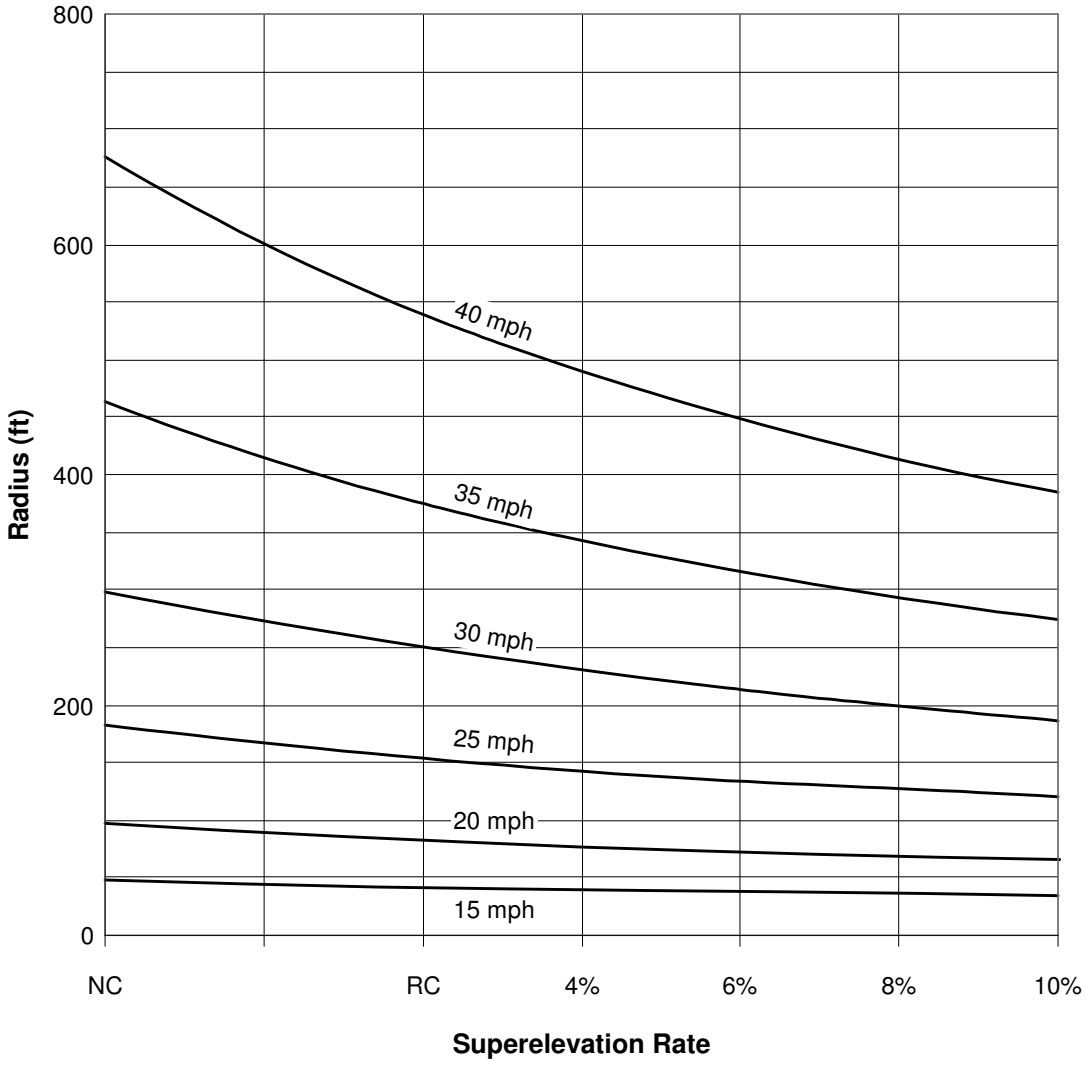

Note:

1. NC = Normal crown. All or part of the roadway has 2% adverse crown.
2. RC = Reverse crown. 2% super.

Superelevation Rates for Low-Speed Urban Managed Access Highways
Figure 640-12b

A

ABSORB 350, 720-3
ABSORB 350 impact attenuator, 720-12
Acceleration lane, 910-8, 940-7
Access,
    hearing, 210-12, 1430-2, 1430-12
    hearing plan, 1430-2, 1430-3
    report plan, 1430-2, 1430-3
    roundabouts, 915-13
Access connection. *See* Managed access
    categories, 1435-7
    managed access, 1420-2, 1420-3
    permit, 1435-8
    spacing, 1420-2, 1435-14
    spacing, corner, 1420-3
Access control, 120-7, 1420-1
    achieving, limited, 1430-1
    definitions, 1420-2
    full, limited, 1430-3
    limited, 1420-1, 1430-1
    limits, 1430-15, 1430-16, 1430-17, 1430-18, 1430-19, 1430-20, 1430-21, 1430-22
    managed, 1420-1, 1435-1
    modified, limited, 1430-8
    partial, limited, 1430-5
    references, 1420-1
    tracking system, 1420-2, 1420-4, 1430-1, 1430-2, 1435-1,1435-2
    vocabulary, 1420-5
Access Point Decision Report (APD Report), 1425-1
    definitions, 1425-2
    documentation, 1425-10
    eight policy topics, 1425-3
    finding of engineering & operational acceptability, 1425-4
    flow chart, 1425-14, 1425-15
    limited access, 1430-3, 1430-12
    procedures, 1425-2
    references, 1425-1
    report and supporting analysis, 1425-4
    review levels, 1425-11, 1425-12
Accessible route, pedestrian, 1025-1
ADA, definition, 1025-1
ADIEM 350 impact attenuator, 720-4, 720-12
Administrative appeal hearing, 210-15
ADT (average daily traffic), 700-1
Agency Request Budget (ARB), 120-15
Agreements, 240-10
Air quality, 240-6
Airport System Plan, 120-13
Airport-highway clearance, 240-4, 240-13, 630-3
Alignment
    horizontal, 620-1
    monuments, 1450-2
    vertical, 630-1
Americans with Disabilities Act (ADA), 1025-1
Analysis
    corridor, 325-7
    deviation, 325-7
    evaluate upgrade, 325-7
    project, 325-7
    risk, 325-8
Approaches
    full access control, 1430-3
    limited access, 1420-2
    modified access control, 1430-8
    partial access control, 1430-5
    railroad, 1430-11
    road, 920-1, 1420-5
    types, 1430-7
Approval
    corridor, FHWA, 220-9
    DEIS, 220-6
    Environmental Classification Summary, 220-2
    FEIS, 220-8
    findings and order, 210-14
    governmental agencies, 240-1
    materials source, 510-2
    Study Plan and a Public Involvement Plan (EIS), 220-3
    Work Order Authorization, CE, 220-9
    Work Order Authorization, EA, 220-10
    Work Order Authorization, EIS, 220-3
Assessing Impacts to Wildlife, 710-15
Archaeological sites, 220-5, 220-10, 220-11
Army Corps of Engineers, 240-1
Arterial HOV, 1050-5, 1050-9
Asphalt pavement
    estimating, 520-3
Audible warning signals, 1025-3

Auxiliary lanes, 620-4, 1010-1
chain-up area, 1010-5
climbing lanes, 1010-2
emergency escape ramps, 1010-4
left-turn, 910-6
one-way left-turn, 910-6
passing lanes, 1010-2
railroad grade crossings, 930-2
right-turn, 910-8
shoulder driving for slow vehicles, 1010-3
slow moving vehicle turnouts, 1010-3
speed change, 910-8
two-way left-turn, 910-7

B

Barricades, 810-11
Barrier curbs, 440-6
Barrier delineation, 830-5
Barrier terminal
buried terminals, 710-8
flared terminal, 710-8, 710-23
nonflared terminal, 710-9, 710-23
other anchor, 710-9
project requirements, 710-2
Barrier transition
definition, 710-1
project requirements, 710-2
Barriers, traffic, 710-1
barrier deflections, 710-5
definition, 710-1
delineation, 830-5
dragnet, 710-17
flare rate, 710-6
length of need, 710-6
moveable, 810-10
shared use path (bicycle), 1020-13
shy distance, 710-4
steel backed timber guardrail, 710-16
stone guardwalls, 710-16
water filled barriers, 810-9
Basic design level, 410-1
minor safety and minor preservation work, 410-1
required safety items of work, 410-1
Basic safety, 410-1
Beam guardrail. *See Guardrail*
Berms, earth
noise wall, 1140-2
Bicycle Advisory Committee, 1020-4
Bicycle coordinator, 1020-1, 1020-3, 1020-7, 1020-17
Bicycle facilities, 1020-1, 1020-7
access, 1020-6, 1430-5, 1430-8, 1430-10
alignment, horizontal, 1020-13
barriers, traffic, 1020-13
bicycle parking, 1020-7
bicycle route, 1020-1
bike lane, 1020-1, 1020-4, 1020-16
bike lanes cross freeway off and on-ramps, 1020-16
bike route, 1020-17
bikeway, 1020-1
bollards, 1020-15
bridges, 1120-4
clearance, 1020-8, 1020-14, 1020-15
crossings, 1020-9
design clear zone, 1020-13
design speed, 1020-13
drainage, 1020-15
drainage grates, 1020-17
intersections, 1020-8
lighting, 1020-7, 1020-15
maintenance, 1020-6
parking, 1020-16
pavement markings, 1020-15 through 17
planning, 1020-2
railroad crossing, 1020-12
roundabouts, 915-12
Rules of the Road (RCW 46.61), 1020-3, 1020-16
rural bicycle touring routes, 1020-2
shared roadway, 1020-2, 1020-4, 1020-17
shared use path, 1020-2, 1020-3, 1020-7 through 12
sidewalks, 1020-4
sight distance, 1020-14
signed shared roadway, 1020-2
signing, 1020-15
State Highway System Plan, 1020-2
storage facilities, 1020-7
structures, 1020-7, 1020-14
superelevation, 1020-13
traffic signals, 1020-11, 1020-17
tunnels, 1020-15
undercrossings, 1020-15
widths, 1020-8, 1020-15
Bicycle Policy Plan, 120-10
Bituminous surface treatment, 520-5
estimating, 520-5
Bollards, 1020-15
Borrow site. *See Sundry sites*

Boundaries, international, 1410-2
Brakemaster impact attenuator, 720-1, 720-8
Bridge rails
concrete safety shape, 710-17
pedestrian, 1025-8
project requirements, 710-3
thrie beam bridge rail retrofit criteria, 710-25
thrie beam retrofit, 710-17
Bridge site data, 1110-1
check list, 1110-5
stream crossings, 1110-2
Bridges, 1120-1
approach slab, 1120-4
design, 1120-1
end slopes, 640-9
existing structures, 1120-1
geotechnical investigation, 510-11
horizontal clearance, 1120-2
location, 1120-1
medians, 1120-2
new structures, 1120-1
pedestrian and bicycle facilities, 1120-4
protective screening for highway structures, 1120-5
rail end treatment, 1120-4
railroad, 1120-2
site design elements, 1120-1
slope protection, 1120-4
slope protection at watercrossings, 1120-5
structural capacity, 1120-1
vertical clearance, 1120-2
widths for structures, 1120-2
Bridle trail, 1020-1
Budgets, 120-15
Buffer strip, pedestrian, 1025-5
Buffer-separated HOV lanes, 1050-1, 1050-3 1050-9, 1050-11
Bulb out, 1025-1
Bus facilities, 1060-1
access, 1430-5, 1430-7, 1430-10
berths, 1060-7
disabled accessibility, 1060-12
grades, 1060-11
intersection, 1060-11
lane widths, 1060-11
passenger amenities, 1060-10
paving sections, 1060-10
transfer/transit centers, 1060-6
turning path template, 1060-23, 1060-24, 1060-35, 1060-36
vehicle characteristics, 1060-11
Bus stops and pullouts, 1060-7
designation and location, 1060-7
far-side, 1060-8
mid-block, 1060-9
near-side, 1060-8
placement, 1060-8
pullouts, 1060-9

C

Caissons, 1130-2
Cantilever sign supports, 820-3
Capacity
highway, 610-1
roundabouts, 915-7
Capacity analysis, 915-7
CAT impact attenuator, 720-1, 720-8
Categories, 915-1
Cattle passes, R/W, 1410-2
CE, definition, 220-1
Center line rumble strips, 700-8
Central Island, 915-11
Certification of documents, 330-4
Chain link
fencing, 1460-2
gates, 1460-3
Chain-off areas, 1010-5
Chain-up areas, 1010-5
Channelization, 910-6
curbing, 910-9
devices, 810-11
islands, 910-9
left-turn lanes, 910-6
right-turn lanes, 910-8
speed change lanes, 910-8
Checklist, environmental
Class II and III, 220-3, 220-10
definition, 220-1
Circulating roadway, 915-9
City streets, 440-3
Classification
functional, 440-2
terrain, 440-3
Clear run-out area, 700-1
Clear zone, 700-2
definitions, 700-1
Design Clear Zone, 700-2,

distance table, 700-10
ditch section, 700-3
ditch section examples, 700-14
inventory form, 700-11, 700-12
recovery area, 700-2
recovery area example, 700-13
roundabouts, 915-12
Clearance. *See also Vertical clearance and Horizontal clearance*
airport-highway, 240-4, 630-3
bikeway, 1020-8
Climbing lanes, 1010-2
Closed circuit television cameras (CCTV), 860-1
Cloverleaf, 940-3
Coast Guard, U.S. (USCG), 240-3, 1110-3
permit, 1110-3
Collector, 440-1, 440-14
Collector distributor roads, 940-9
Combined hearings, 210-15
Commercial road approach, 920-3
Communication towers
geotechnical investigation, 510-7
Comprehensive plans, 120-4, 120-5
Concrete barrier
concrete barrier terminals, 710-14
shapes, 710-13
Concurrent flow HOV lanes. *See* Nonseparated HOV lanes
Condemnations, 1410-5
Cones, 810-11
Conflict, 910-1
Connection. ***See*** Access connection
categories, 1435-7
permit, 1435-8
spacing, 1435-14
Connections, 940-6 through 9
managed access, 1420-2, 1420-3
Construction permits, 1410-3
Contour grading, 1310-1
Control monuments, 1450-2
Controllers, signal, 850-8
Corner clearance, 1420-3
Corner clearance, managed access, 1435-6
Corridor hearing, 210-11
Corridor Management Plan (CMP), 120-11
Corridor or project analysis, 325-7
County roads, 440-3
Crash cushion. *See Impact attenuator*
Critical fill slope, 700-1
Cross sections
encroachment (RR), 930-3
interchange ramp, 940-5
roadways, 640-2
rock cuts, 640-7
side slopes, 640-7
stepped slopes, 640-8
Cross slope, 430-2, 640-4
roadways, 640-2
shoulders, 640-4
traveled way, 640-2
Crossing
railroad grade, 930-1
Crossovers, median, 960-1
Crossroads, 910-1, 910-3
ramp terminal intersections, 940-9
Crosswalks, 850-8, 1025-1
marked, 1025-6
unmarked, 1025-6
Crown slope for divided roadways, 640-10
Culvert ends, 700-5
Curb cuts, 1020-12
shared use path, 1020-12
Curbs, 440-6, 910-9
Current Law Budget (CLB), 120-15
Curves
horizontal, 620-2
superelevation, 640-4
vertical, 630-2
Cut slopes, 640-10, 640-11, 640-12, 640-14, 700-4

D

Datums, surveying, 1440-2
DDS. *See Design Decision Summary*
Deceleration lane, 910-8, 940-8
Decision sight distance, 650-4
DEIS, definition, 220-2
Delineation, 830-1
guide posts, 830-4
pavement markings, 830-1
traffic barriers, 830-5
wildlife warning reflectors, 830-5
Department of Defense (DOD), 1120-3
Design
elements, 325-5
exception (DE), 325-7
hearing, 210-12
level, 325-6
matrix procedures, 325-1

speed, 430-1, 440-1, 440-3, 940-4
variance, 325-7
vehicle, 430-3, 910-4
Design Clear Zone, 700-2 through 700-6
definition, 700-1
distance table, 700-10
ditch sections, 700-3
ditch section examples, 700-14
roundabouts, 915-12
Design considerations, 920-2
Design considerations for intersections at grade, 910-3
configurations, 910-3
crossroads, 910-3
spacing, 910-4
traffic analysis, 910-3
Design Decisions Summary (DDS), 330-7
Design Exception (DE), 325-7, 330-4
documentation, 330-4
Design level, 325-6
Design matrix, 325-1
Design Elements, 325-5
design level, 325-6
procedures, 325-1
Project Type, 325-2
selecting, 325-1
terminology in notes, 325-7
using, 325-2
Design template, 920-2
Design Variance Inventory System (DVIS), 325-7
Designated state highways map, 120-11
Developer initiated intersections, 910-13
Deviation, 325-7, 330-4, 340-6
documentation, 330-4
Diamond interchange, 940-3
Direct access ramp, HOV, 1050-2, 1050-3, 1050-5, 1050-9. *HOV Direct Access Design Guide*, Draft, M 22-98
Directional interchange, 940-3
Disabled access, transit, 1060-12
Discipline Report, 220-1
Distribution facilities, 620-2
Ditch inslopes, 430-3
DMS, definition, 860-4
DNS, definition, 220-1
Documentation *See* the last heading of most chapters
environmental, 220-1
Drainage, 940-4, 1210-1
Drainage ditches in embankment areas, 640-9
Drilled shafts, 1130-2
Drop lanes, 910-8
Drums, 810-11
Dynamic message signs (DMS), 860-4

E

EA, definition, 220-1
Easements,
perpetual, 1410-3
right of way, 1410-2
temporary, 1410-3
Ecology, Department of, 240-6
ECS, definition, 220-1
EIS, definition, 220-2
Elevators, 1025-9
Element, design, 325-5
Emergency escape ramps, 1010-4
Emergency vehicle preemption, 850-11
Encroachment, railroad, 930-3
Endangered species, 210-7, 220-7, 220-8, 220-10, 240-2, 240-11
Enhanced enforcement, 810-8
Environmental documents
APD report, 1425-9
geotechnical report, 510-5
project, 220-1
Environmental hearing, 210-11
Environmental Protection Agency, 240-5
Environmental Review Summary (ERS), 330-7
Erosion prevention, 1350-2
ERS. *See Environmental Review Summary*
Escape ramps, 1010-4
Evaluate Upgrade (EU), 325-7, 330-4
documentation, 330-4
Exit pattern
uniformity, 940-4

F

Farm road approach, 920-3
Farmlands, 210-7, 220-5, 220-10, 220-11, 240-11
Federal agencies, 240-1
Federal aid
environmental categories, 220-2
landscape projects, 1320-4
R/W documents, 1410-6
Federal Aviation Administration (FAA), 240-4
Federal Energy Regulatory Commission (FERC), 240-5
Federal lands
R/W transactions, 1410-4

FEIS, definition, 220-2
Fencing, 1460-1
chain link, 1460-2
design criteria, 1460-1
documentation, 1460-3
fencing types, 1460-2
gates, 1460-3
limited access highways, 1460-1
managed access highways, 1460-2
procedure, 1460-3
special sites, 1460-2
wire fencing, 1460-3
Ferry System Plan, 120-13
FHWA - WFLHD, 240-4
Filing requirements, monuments, 1450-3
Fill slopes, 430-3, 640-10, 640-11, 640-12, 640-14, 700-4
Findings
engineering and operational acceptability, 1425-4
Findings and order, 210-14
plan, 220-13, 1430-2
Fire hydrants, 700-6
Fish and Wildlife, Department of, 240-6
Fixed objects, 700-4
Flood plains, 210-7, 220-5, 220-7, 220-8, 220-10, 220-11, 1210-1
Flyer stop, 1050-2, 1050-3, 1050-5. *HOV Direct Access Design Guide*, Draft, M 22-98
FONSI, definition, 220-2
Forest Service, U.S. (USFS), 240-3
Freeway lighting applications, 840-9
Freight and Goods Transportation System (FGTS), 120-7
Freight Rail Plan, 120-9
Frontage roads, 620-3, 1430-10
Full design level, 440-1
city streets and county roads, 440-3
curbs, 440-6
design speed, 440-3
functional classification, 440-2
geometric design data, 440-3
grades, 440-7
medians, 440-5
parking, 440-6
pavement type, 440-7
shoulders, 440-4
state highway system, 440-3
state highways as city streets, 440-3
structure width, 440-7
terrain classification, 440-3
traffic lanes, 440-4
Functional classification, 120-6, 440-1, 440-2
Funding. *See Programming*

G

G-R-E-A-T impact attenuator, 720-5, 720-13
Gabion walls, 1130-10
Gates, 1460-3
Geographic Information System (GIS), 1440-3
Geometric
design data, 440-3
Geometric cross section, 640-1
medians, 640-6
minimum radius for normal crown section, 640-5
outer separations, 640-6
roadsides, 640-7
roadways, 640-2
shoulders, 640-4
superelevation, 640-4
traveled way cross slope, 640-2
turning roadway widths, 640-2
Geometric plan elements, 620-1
arrangement of lanes, 620-3
distribution facilities, 620-2
frontage roads, 620-3
horizontal alignment, 620-1
horizontal curve radii, 620-2
lane transitions, 620-4
median width transitions, 620-4
number of lanes and arrangement, 620-3
pavement transitions, 620-4
Geometric profile elements, 630-1
airport clearance, 630-3
alignment on structures, 630-2
coordination of vertical and horizontal alignments, 630-2
design controls, 630-1
grade length, 630-2
length of grade, 630-2
maximum grades, 630-2
minimum grades, 630-2
minimum length of vertical curves, 630-2
railroad crossings, 630-3
vertical alignment, 630-1
Geometrics
horizontal alignment, 620-1
vertical alignment, 630-1

Geosynthetic soil reinforcement, 1130-9
Geosynthetics, 530-1
applications, 530-2, 530-16
definition, 530-2
design approach, 530-3
design process, 530-12
design responsibility, 530-11
ditch lining, 530-6
documentation, 530-11
erosion control, 530-5
function, 530-2
separation, 530-4
site-specific designs, 530-10
soil stabilization, 530-5
standard specification, 530-9
temporary silt, 530-20
temporary silt fence, 530-6
types, 530-14
types and characteristics, 530-1
underground drainage, 530-3
Geotechnical investigation, design, and reporting, 510-2
bridge foundations, 510-11
buildings, 510-7
cantilever signs, 510-7
communication towers, 510-7
consultants, 510-14
documentation, 510-14
earthwork, 510-4
ferries projects, 510-13
hydraulic structures, 510-5
key contacts, 510-2
luminaire, 510-7
noise walls, 510-8
park and ride lots, 510-7
permits, 510-3
reinforced slopes, 510-8
rest areas, 510-7
retaining walls, 510-8
rockslope, 510-10
sign bridges, 510-7
signals, 510-7
site data, 510-3
surfacing report, 510-14
unstable slopes, 510-9
Geotextiles
descriptions, 530-1
standard specification, 530-9
types, 530-15
Glare screens, 700-8, 700-9, 700-17
Global Positioning System (GPS), 1440-2
Gore, 940-1, 940-8
Governmental agencies, 240-1
Grade crossing, railroad, 930-1
Grade intersections, 910-1
Grades, 430-2, 440-7, 915-11
bikeway, 1020-6
change/city and town/adoption, 240-9
maximum, 440-9, 440-10, 440-12, 440-14, 630-2
minimum, 630-2
ramp, 940-5
roundabouts, 915-11
shared use path, 1020-14
vertical alignment, 630-2
Grading, contour, 1310-1
Gravity walls, 1130-1
Guardrail
placement cases, 710-11
steel backed timber guardrail, 710-16
terminals and anchors, 710-8
thrie beam, 710-7, 710-25
W-beam, 710-7
Guide posts, 830-4
placement, 830-7
Guide sign plan, 820-4
Guidelines for wall/slope selection, 1130-5
cost considerations, 1130-8
cut and fill considerations, 1130-5
facing options, 1130-7
feasible wall and slope heights and applications, 1130-7
settlement and deep foundation support considerations, 1130-6
summary, 1130-8
supporting structures or utilities, 1130-7

H

HAR, definition, 860-4
Hazard, 700-4
definition, 700-1
fixed objects, 700-4
median considerations, 700-6
side slopes, 700-4
water, 700-6
Headlight glare, 700-8
Hearings, 210-6
access, 210-12, 1430-2, 1430-12
administrative appeal, 210-15
advertising, 210-7

combined, 210-15
corridor, 210-11
design, 210-12
environmental, 210-11, 220-7, 220-12
examiner, 210-13
findings and order, 210-14
formal, 210-4
informal, 210-4
notice, 210-7
open format, 210-4
preparation, 210-8
requirements, 210-6
sequence, 210-16
study plan, 210-3, 210-11
Heritage tour route
barrier, 710-4
designations, 120-11
Hex-Foam Sandwich impact attenuator, 720-5, 720-14
High accident corridor (HAC), 1025-2
High accident locations (HAL), 1025-2
High occupancy vehicle (HOV) facilities, 915-1, 1050-1, *DM* Supplements 5/3/2000 & 9/28/1999
arterial street, 1050-5, 1050-9
buffer-separated, 1050-3, 1050-9
design criteria, 1050-7
direct access ramp, 1050-2, 1050-3, 1050-5, 1050-9, *HOV Direct Access Design Guide,* Draft, M 22-98
enforcement, 1050-7
enforcement areas, 1050-9, 1050-10, 1050-13 through 1050-15
facility type, 1050-3
flyer stop. 1050-2, 1050-3, 1050-5, *HOV Direct Access Design Guide*, Draft, M 22-98
freeway, 1050-3
ITS, 1050-7
lane termination, 1050-9
nonseparated, 1050-3, 1050-9
preliminary design and planning, 1050-2
ramp meter bypass design criteria, 1050-9, 1050-13, 1050-14
separated roadway, 1050-3, 1050-8, 1050-11
signs and pavement markings, 1050-10
vehicle occupancy designation, 1050-6
Highway
airport clearance, 240-4
as city streets, 440-3
Highway Access Management Classification Reports, 120-7
Highway advisory radio (HAR), 860-4
Highway-highway separation, 1110-3
Highway-railroad separation, 1110-3
Highways and Local Programs Service Center, 120-10
Horizontal alignment, 620-1
Horizontal clearance, bridge, 1120-2
Horizontal curve radii, 620-2
HOV facilities. *See High occupancy vehicle facilities*
Hydraulic considerations, 1210-1
channel changes, 1210-2
flood plain, 1210-1
roadway drainage, 1210-2
runoff, 1210-3
stream crossings, 1210-2
subsurface discharge, 1210-3
subsurface drainage, 1210-3
Hydraulic design, 1210-1
design responsibility, 1210-3
geotechnical investigation, 510-5
hydraulic considerations, 1210-1
safety considerations, 1210-3

I

IDT, 220-3
Illumination, 915-13
bridges, 840-5
construction zones and detours, 840-4
roundabouts, 915-13
Impact attenuator systems, 720-1
design criteria, 720-5
object markers, 830-5
older systems, 720-5
permanent installations, 720-1
selection, 720-6
work zone installation, 720-3
Inertial barrier, 720-3, 720-5, 720-12
Inscribed diameter, 915-9
Intelligent transportation systems (ITS), 860-1
closed circuit television cameras, 860-1
dynamic message signs, 860-4
highway advisory radio, 860-4
HOV bypass, 860-4
HOV facilities, 1050-7
motorist information, 860-4
National ITS Architecture, 860-1
public information components, 860-4

surveillance, control, and driver information, 860-1
traffic data collection, 860-2
traffic flow control, 860-3
traffic operations center (TOC), 860-2
Traffic Systems Management Center (TSMC), 860-2
Venture Washington, 860-1
Interchanges. *See Traffic interchanges*
access control, 1430-3
International boundaries, R/W, 1410-2
Intersections at grade, 430-3, 910-1, 910-2
angle, 430-3
channelization, 910-6
configurations, 910-3
design considerations, 910-3
design vehicle, 430-3
documentation, 910-13
four leg intersection, 910-2
interchange ramp terminals, 910-12
island, 910-2, 910-9
leg, 910-2
median crossover, 910-2
plans, 910-13
right-turn corners, 910-5
roundabouts, 910-2, 910-10, 915-1
sight distance, 910-11
spacing, 910-4
tee (T) intersection, 910-2
traffic control, 910-12
transit, 1060-11
U-turns, 910-10
wye (Y) intersection, 910-2
Interstate, 325-1, 440-2, 440-9
Irrigation, 1330-1
Islands, 910-2, 910-9
compound right-turn lane, 910-9
location, 910-9
roundabouts, 915-11
size and shape, 910-9
ITS, definition, 860-1

J

Jurisdiction Over State Highways, DM Supplement 1/22/2003

L

Labor and Industries, Department of (L&I), 240-9
Land corner record (form), 1450-7
Landscaping, 1300-2, 1320-1, 1330-1, 1350-1
Lane, 940-6
balance, 940-6
bike, 1020-1, 1020-4
drop, 910-8
number and arrangement, 620-3
reduction, 940-6
transitions, 620-4
width, 430-1, 440-4
Lane lines. *See Pavement markings*
Left-turn lanes, 910-6
one-way, 910-6
storage, 910-6
two-way, 910-7
Length of need, traffic barrier, 710-6
definition, 710-1
Licensed professionals, certification by, 330-4, 1450-2, 1450-3
Light standards, 700-6, 840-7
geotechnical investigation, 510-7
Limited access 1430-1
approach, 1420-2
definitions, 1420-2, 1420-4
full control, 1430-3
level of control, 1430-1
limits, 1430-15, 1430-16, 1430-17, 1430-18, 1430-19, 1430-20, 1430-21, 1430-22
modifications to, 1430-12
modified control, 1430-8
partial control, 1430-5
references, 1420-1
vocabulary, 1420-5
Limits
turnback, 1430-11
LMA impact attenuator, 720-5, 720-14
Load rating, bridges, 1120-1
Local agency
bridge design, 1120-2
initiated intersections, 910-13
Longitudinal barrier. *See Traffic barrier*
Longitudinal easements, railroad, 930-3
Loop ramp connections, 940-9
Low clearance warning signs, 1120-3
Luminaire. *See Light standards*

M

Mailbox location and turnout design, 700-16
Mailboxes, 700-5
limited access, 1430-5, 1430-7, 1430-10

Maintenance site. *See Sundry sites*
Managed access
access connection, 1435-1
Class, 1435-1
connections, 1420-2, 1420-3
corner clearance, 1435-6
definitions, 1420-2
permit, 1435-8
references, 1420-1
vocabulary, 1420-5
Manual on Uniform Traffic Control Devices (MUTCD), 820-1, 830-1, 850-1, 860-2, 1025-1, 1120-3
Maps. *See also Plans*
monumentation, 1450-3
Marked crosswalks, 1025-6
Masonry concrete blocks, 1130-7
Mast arm signal standards, 850-14
Master Plan for Limited Access Highways, 120-7, 330-7, 1420-4
Materials sources, 510-1, 510-16
Matrix. *See Design matrix*
Mechanically Stabilized Earth (MSE), 1130-1, 1130-22
Median, 440-5, 640-6
design, 640-6
safety considerations, 700-6
transitions, 620-4
width, 440-5
Median barrier, 700-6
Median crossovers, 960-1
analysis, 960-1
approval, 960-2
design, 960-1
supplement August 1, 2001
Memorandum of Agreement
Advisory Council, SHPO, and FHWA, 220-7
Historic Preservation, 220-9
Memorandum of Understanding
Conservation Commission, 220-6
Fish and Wildlife, 240-6
Highways Over National Forest Lands, 240-3
USCG and FHWA, 240-3
WSP, 1040-2
Metal bin walls, 1130-11
Metropolitan Planning Organizations (MPO), 120-3
Metropolitan Transportation Improvement Program (MTIP), 120-4, 120-14
Midblock pedestrian crossing, 1025-1
Mileposts
markers, 820-4
sign, 820-4
Military Traffic Management Command Transportation Engineering Agency (MTMCTEA), 1120-3
Minor arterial, 440-2, 440-12
Minor operational enhancement projects, 340-1
matrix procedures, 340-3
project approval, 340-5
project types, 340-2
selecting a matrix, 340-4
using a matrix, 340-4
Minor safety and minor preservation work, 410-1
Modified design level, 430-1
bridges, 430-3
cross slope, 430-2
design speed, 430-1
fill slopes and ditch inslopes, 430-3
intersections, 430-3
profile grades, 430-2
ramp lane widths, 430-1
roadway widths, 430-1
stopping sight distance, 430-2
Monotube cantilever sign supports, 820-3
Monotube sign bridges, 820-3
Monument Database, WSDOT, 1440-2
Monumentation, 1450-1
alignment monuments, 1450-2
control monuments, 1450-2
DNR permit, 1450-3
filing requirements, 1450-3
land corner record, 1450-3
monumentation map, 1450-3
other monuments, 1450-3
property corners, 1450-3
Mopeds, 1020-1
Motorist information, 860-4
additional public information components, 860-4
dynamic message signs, 860-4
highway advisory radio, 860-4
Mountable curbs, 440-6
Moveable barriers, 810-10
MTMCTEA, 1120-3
MUTCD, 820-1, 830-1, 850-1, 860-2, 1025-1

N

N-E-A-T impact attenuator, 720-4, 720-12
National Highway System (NHS), 325-1, 440-2
    Interstate System, 325-1
    Strategic Highway Corridor Network (STRAHNET), 325-1
National ITS Architecture, 860-1
Natural Resources, Department of, 240-8
Navigable waters, 240-3
NEPA, definition, 220-1
New Jersey shape barrier, 710-14
Noise barriers, 1140-1
    design, 1140-1
    documentation, 1140-4
    earth berm, 1140-2
    geotechnical investigation, 510-8
    noise wall, 1140-2
    procedures, 1140-4
    wall types, 1140-3
Non-NHS highways, 325-2
Non-recoverable slope, 700-2
Non-separated HOV lanes, 1050-2, 1050-3, 1050-5, 1050-7, 1050-9, 1050-11
Notional live load, 1120-1

O

Object markers, 830-5
Off connections, 940-8
Office of Urban Mobility, 120-12
On connections, 940-7
One-way left-turn geometrics, 910-7
Open house meetings, 210-4
Outer separations, 640-2, 640-6
Overhead sign installations, 820-3

P

PAL, 1025-2
Park and ride lots, 1060-1
    access, 1060-3
    bicycle facilities, 1060-5
    design, 1060-2
    drainage, 1060-5
    fencing, 1060-6
    geotechnical investigation, 510-7
    illumination, 1060-5
    internal circulation, 1060-3
    landscape, 1060-6
    maintenance, 1060-6
    motorcycle facilities, 1060-5
    pavement design, 1060-5
    pedestrian movement, 1060-4
    shelters, 1060-5
    site selection, 1060-2
    stall size, 1060-4
    traffic control, 1060-5
Parking, 440-6
    roundabouts, 915-13
Partial cloverleaf, 940-3
Passing lanes, 1010-2
Passing sight distance, 650-1
    horizontal curves, 650-2
    no passing zone markings, 650-2
    vertical curves, 650-2
Path, bicycle. *See Shared use path*
Pavement
    transitions, 620-4
    widening, 620-4
Pavement markings
    longitudinal, 830-1
    materials, 830-6
    roundabouts, 915-12
    transverse, 830-2
Pavement structure, 520-1
    asphalt concrete pavement, 520-3
    base and surfacing quantities, 520-7
    bituminous surface treatment, 520-5
    estimating tables, 520-1
    typical section, 520-6
PCMS, 810-10
PD. *See Project definition*
Pedestrian accident locations (PAL), 1025-2
Pedestrian bridge, 1120-2
Pedestrian connectivity, 1025-3
Pedestrian crossings at-grade, 1025-6
    limited access, 1430-5, 1430-7, 1430-10
Pedestrian design considerations, 1025-1
    activity generators, 1025-4
    bridges, 1120-4
    bulb out, 1025-1
    cross slope, 1025-6
    crosswalk, 1025-1
    diagonal ramps, 1025-7
    facilities, 1025-1, 1025-4
    funding programs, 1025-2
    grade, 1025-6
    grade separations, 1025-8
    human factors, 1025-3
    illumination and signing, 1025-9
    landing, 1025-1
    midblock pedestrian crossing, 1025-1

policy, 1025-2
raised median, 1025-2
refuge island, 1025-2
roundabouts, 915-12
shared use paths, 1025-5
shoulders, 1025-5
sidewalk ramps, 1025-7
sidewalks, 1025-5
transit stops, 1025-9
walking and hiking trails, 1025-5
walking rates, 1025-3
Pedestrian Policy Plan, 120-10
Pedestrian risk projects, 1025-2
Pedestrian-friendly, 1025-1
Permits
construction, 1410-3
geotechnical permits, 510-3
governmental agencies, 240-1
managed access, 1435-8
remove/destroy monument, 1450-5
right of way, 1410-2
traffic signal, 850-2
Photogrammetry, 1440-3
Physical barriers, 810-9
Pit sites, R/W, 1410-2
Planning, 120-1
definitions, 120-2
legislation and policy development, 120-2
linking transportation plans, 120-13
planning and programming, 120-16
planning at WSDOT, 120-7
planning to programming, 120-15
references, 120-1
Plans
access hearing, 210-13, 1410-6, 1430-2, 1430-3
access, findings and order, 1430-2
access, intersection, 1430-13, 1430-14
access report, 1430-2, 1430-3
environmental study, 210-3, 220-2, 220-3, 220-4
findings and order, 220-13
guide sign, 820-4
interchange, 940-10
intersection, 910-13
limited access, 1410-2
limited access, modifications to, 1430-12
PS&E, R/W, 1410-4
public involvement, 210-3, 220-2
right of way, 1410-1, 1410-3, 1410-4
right of way and limited access, 1430-1, 1430-2, 1430-5, 1430-8, 1430-10, 1430-12, 1430-13
Water Pollution Control (WPCP), 240-7
Pollution control, 240-6
Portable changeable message signs, 810-10
Portable traffic signals, 810-12
Preliminary signal plan, 850-14
Principal arterial, 440-2, 440-10
Private land
R/W transactions, 1410-4
Profile grades, 440-7
Program Management Office, 120-15
Programming
R/W appraisal and acquisition, 1410-6
R/W funding, 1410-4
Project analysis, 325-7
Project definition phase
Environmental Review Summary (ERS), 330-7
Project Type, 325-2
Property corners, 1450-3
Proprietary items, 720-7
impact attenuator, 720-7
irrigation, 1330-1
noise walls, 1140-4
retaining wall design process, 1130-28, 1130-29
retaining walls, design, 1130-9
retaining walls options, 1130-18
roadside devices, 1300-3
traffic barrier terminals, 710-8, 710-9
traffic barriers, special, 710-16
Protective screening for highway structures, 1025-8, 1120-5
Public information, 810-1
Public Involvement Plan, 220-2
Public Transportation and Intercity Rail Passenger Plan for Washington State, 120-8
Public Transportation and Rail Division, 120-8

Q

Q Program, 340-1
QuadGuard cz impact attenuator, 720-4
QuadGuard Elite impact attenuator, 720-2
QuadGuard impact attenuator, 720-2, 720-9
QuadTrend-350 impact attenuator, 720-1, 720-8
Quarry site. *See Sundry sites*

R

Railroad
- crossings, 630-3, 930-1
- easements, 930-3
- encroachments, 930-3
- grade crossing orders, 930-3
- grade crossings, 930-1
- limited access, 1430-11
- longitudinal easements, 930-3
- preemption, 850-11
- R/W transactions, 1410-4
- stopping lanes, 930-2
- traffic control systems, 930-1

Ramp, 940-4
- cross section, 940-5
- design speed, 940-4
- grade, 940-5
- HOV direct access. *HOV Direct Access Design Guide*, Draft, M 22-98
- HOV ramp meter by pass, 1050-9, 1050-13, 1050-14
- lane increases, 940-5
- lane widths, 430-1, 940-5
- meters, 940-6
- sight distance, 940-5
- terminal intersections at crossroads, 940-9
- terminals, 910-12

REACT 350 impact attenuator, 720-3, 720-4, 720-11
- Recoverable slope, 700-2,

Recovery area, 700-2, 700-13

Regional Transportation Improvement Program (RTIP), 120-14

Regional Transportation Planning Organizations (RTPO), 120-4, 120-6

Regulatory traffic control strategies, 810-8

Reinforced slopes, 1130-1
- geotechnical investigation, 510-8

Reports
- discipline, 220-5

Required safety items of work, 410-1

Residential road approach, 920-2

Rest areas, 1030-1
- geotechnical investigation, 510-7

Retaining walls, 1130-1
- aesthetics, 1130-4
- anchored walls, 1130-2, 1130-24
- classifications, 1130-1
- constructibility, 1130-4
- coordination with other design elements, 1130-4
- cut and fill considerations, 1130-5
- data submission for design, 1130-13
- design principles, 1130-2
- design requirements, 1130-2
- drainage design, 1130-3
- gabion walls, 1130-10, 1130-23
- geotechnical investigation, 510-8
- geotechnical and structural design, 1130-3
- investigation of soils, 1130-3
- metal bin walls, 1130-11, 1130-23
- MSE gravity walls, 1130-2, 1130-22
- nongravity cantilevered walls, 1130-2, 1130-24
- nonpreapproved proprietary walls, 1130-12
- nonstandard nonproprietary walls, 1130-12
- nonstandard walls, 1130-9, 1130-13
- preapproved proprietary walls, 1130-11
- prefabricated modular gravity walls, 1130-2, 1130-23
- proprietary wall systems, 1130-9
- rigid gravity walls, 1130-1, 1130-24
- rockeries, 1130-2, 1130-25
- semigravity walls, 1130-2, 1130-24
- settlement and deep foundation support considerations, 1130-6
- standard walls, 1130-9, 1130-10
- traffic barrier shape, 1130-3
- wall and slope heights, 1130-7

Revegetation, 1300-2, 1320-1

Right of way, 1410-1
- appraisal and acquisition, 1410-4
- easements and permits, 1410-2
- plans, 1410-1
- programming for funds, 1410-4
- special features, 1410-2
- transactions, 1410-4

Right-turn at intersections, 910-5
- corners, 910-5
- lanes, 910-8
- pocket and taper, 910-8

Road approaches, 920-1, 1420-5
- commercial, 920-3
- design considerations, 920-2
- design template, 920-2
- drainage requirements, 920-4
- farm, 920-3
- location, 920-3
- residential, 920-2

right of way, 1410-2
sight distance, 920-3
utility and special use, 920-3
Road closures, 810-5
Roadside Classification Plan, 1300-2
Roadside development, 1300-1
documentation, 1300-2
recommendations, 1300-3
requirements, 1300-2
Roadside Classification Plan, 1300-2
Roadside Manual, 1300-2
Roadside safety, 700-1
clear zone, 700-2
definitions, 700-1
Documentation, 700-9
fixed objects, 700-4
guidelines for embankment barrier, 700-15
hazards, 700-4
headlight glare, 700-8
median considerations, 700-6
rumble strips, 700-7
side slopes, 700-4
water, 700-6
Roadsides, 640-7
bridge end slopes, 640-9
drainage ditches in embankment areas, 640-9
roadway sections in rock cuts, 640-7
side slopes, 640-7
stepped slopes, 640-8
Roadway rumble strips, 700-7
Roadways, 640-2
shoulders, 640-4
traveled way cross slope, 640-2
turning roadway widths, 640-2
widths, HOV facilities, 1050-8, 1050-11, 1050-12
Rock anchors, 1130-2
Rock cuts, 640-7
geotechnical investigation, 510-10
Rock, investigation, 510-1
Rock walls, 1130-2
ROD, definition, 220-2
Roundabouts, 910-2, 910-10, 915-1
access, 915-13
access control, modified, 1430-9
access control, partial, 1430-6
bicycles, 915-12
capacity analysis, 915-7
categories, 915-5
circulating roadway, 915-9
deflection, 915-8
design clear zone, 915-12
design speed, 915-8
elements, 915-3
entry, 915-9
exit, 915-10
geometric design, 915-7
grades, 915-11
illumination, 915-13
inscribed diameter, 915-9
islands, 915-11
locations not normally recommended, 915-1
locations not recommended, 915-2
parking, 915-13
pavement marking, 915-12
pedestrians, 915-12
recommended locations, 915-1
sight distance, 915-10
signing, 915-12
superelevation, 915-11
transit facilities, 915-13
Route, bicycle, 1020-1, 1020-17
Route continuity, 940-4
Route Development Plans, 120-11, 330-7
Rumble strips, 700-7
Runoff, 1210-3

S

Safety, basic, 410-1
Safety rest areas, 1030-1
Safety, roadside. *See Roadside safety*
SC&DI, 860-1
Scale sites, 1040-1
Scenic byway, 120-11
barrier, 710-4
School walk route, 1025-7
Scoping, 220-3
Scoping phase
Design Decisions Summary (DDS), 330-7
Project Definition (PD), 330-8
project summary, 330-7
Screening, 810-12
Section 4(f), 220-6, 220-9, 220-10, 220-11
definition, 220-2
lands, 210-7, 220-7, 220-8, 240-4
Semidirectional interchange, 940-3
Sentre impact attenuator, 720-5, 720-13
SEPA, definition, 220-1
Shared roadway, 1020-4, 1020-17

Shared use paths, 1020-2, 1025-5
Sheet piles, 1130-2
Shoreline Development Permit, 240-9
Shotcrete facing, 1130-7
Shoulders
    cross slope, 640-4
    driving for slow vehicles, 1010-3
    functions, 440-4
    islands, 910-9
    rumble strips, 700-7
    slope, 640-4
    turnouts, 1010-3
    width, 430-1, 440-4
    width for curb, 440-6
Shy distance, 710-4
    definition, 710-1
    structure, 440-7
Side slopes, 700-4
Sidewalk ramps, 1025-7
Sidewalks, 1020-4, 1025-5
Sight distance, 650-1, 920-3, 940-5, 940-7
    bicycle, 1020-14
    decision, 650-4
    intersections, 910-11
    passing, 650-1
    road approaches, 920-3
    roundabouts, 915-10
    stopping, 650-2, DM Supplement 10/9/2002
Sight triangle, 910-11
Sign posts, 700-5
Signal
    geotechnical investigation, 510-7
    intersection warning sign, 850-13
    phasing, 850-4
    supports, 700-6, 850-13
    warrants, 850-4
Signed shared roadway. *See Bicycle facilities*
Signing, 820-1
    bikeways, 1020-15, 1020-17
    bridges, 820-3, 1120-3
    cantilever sign structures, 820-3
    design components, 820-2
    foundations, 820-3
    geotechnical investigation, 510-7
    ground mounted signs, 820-3
    guide sign plan, 820-4
    heights, 820-2
    horizontal placement, 820-4
    illumination, 820-3
    lateral clearance, 820-2
    lighting fixtures, 820-3
    location, 820-2
    longitudinal placement, 820-2
    mileposts, 820-4
    overhead installation, 820-3
    posts, 700-5, 820-3
    roundabouts, 915-12
    service walkways, 820-4
    structure mounted sign mountings, 820-3
    vertical clearance, 820-4
Silt fence, 530-6
Single point (urban) interchange, 940-3
Single slope barrier, 710-14
Site data for structures, 1110-1
    additional data for grade separations, 1110-3
    additional data for waterway crossings, 1110-2
    additional data for widenings, 1110-4
    CAD files and supplemental drawings, 1110-1
    highway-highway separation, 1110-3
    highway-railroad separation, 1110-3
    required data for all structures, 1110-1
Slope
    bridge end, 640-9
    geotechnical investigation, 510-8
    protection, 1120-4
    protection at watercrossings, 1120-5
    roadways, 640-2
    rock cuts, 640-7
    shoulders, 640-4
    side slopes, 640-7
    stabilization, 1350-2
    stepped, 640-8
    traveled way, 640-2
Slow moving vehicle
    turnouts, 1010-3
Soil bioengineering, 1350-1
    design responsibilities and considerations, 1350-3
    streambank stabilization, 1350-2
    upland slope stabilization, 1350-2
Soil nail walls, 1130-8
Soils, 510-1
    investigation, 510-1
soldier piles, 1130-2
Spacing
    interchanges, 940-4
    intersections, 910-4

Span wire, 850-14
Special permits and approvals, 240-1
Speed change lanes, 910-8, 940-7, 940-8
Speed, design, 440-3, 940-4
Splitter island, 915-11
Stairways, 1025-9
State Commute Trip Reduction Program, 120-8
State Highway System Plan, 120-5, 120-10, 120-11, 330-7
    rural bicycle touring routes, 1020-2
    urban bicycle projects, 1020-2
State highways as city streets, 440-3
Statewide Transportation Improvement Program (STIP), 120-5, 120-14
Steel backed timber guardrail, 710-16
Stepped slopes, 640-8
Stockpiles, R/W, 1410-2
Stone guardwalls, 710-16
Stopping sight distance, 430-2, 650-2
    crest vertical curves, 650-3
    effects of grade, 650-3
    existing, 650-3
    horizontal curves, 430-2, 650-4
    sag vertical curves, 650-4
    vertical curves, 430-2
Storage length, left-turn lane, 910-6
Strain poles
    steel, 850-14
    timber, 850-14
Streambank stabilization, 1350-2
Striping. *See Pavement markings*
Structural capacity, 1120-1
Structure width, 440-7
Structures. *See Bridges*
Study plan
    environmental, 220-2, 220-3, 220-4
    value engineering, 315-2
Sundry sites
    public lands, 240-8
    right of way, 1410-2
    source of materials, 510-1
Superelevation, 640-4
    existing curves, 640-5
    intersections, 640-5, 640-27
    rates, 640-4, 640-24, 640-25, 640-26
    roundabouts, 915-11
    runoff for highway curves, 640-5
    runoff for ramp curves, 640-6
    shared use path, 1020-13
Surface Transportation Program, 120-7
Surfacing materials, 510-1
    base and surfacing quantities, 520-7
    investigation, 510-1
    pavement structure, 520-1
    surfacing report, 510-14
Surveying and mapping, 1440-1
    after construction is completed, 1440-2
    datums, 1440-2
    during design and development of the PS&E, 1440-1
    during the project definition phase, 1440-1
    geographic information system (GIS), 1440-3
    global positioning system (GPS), 1440-2
    photogrammetric surveys, 1440-3
    procedures, 1440-1
    WSDOT monument database, 1440-2

T

Taper, 910-8. *See also Lane transitions*
TAU-II impact attenuator, 720-2, 720-10
TDM Strategic Plan, 120-9
Temporary concrete barriers, 810-10
Temporary pavement markings, 810-12
Terrain classification, 440-3
Textured crosswalks, 1025-6
Thrie beam. *See Guardrail*
TMA, 810-10
TRACC impact attenuator, 720-4, 720-12
Traffic
    data collection, 860-2
    islands, 910-9
    lanes, 440-4
    operations center (TOC), 860-2
    signal design, 850-4
    signal permit, 850-2
Traffic analysis
    intersections, 910-3
Traffic barrier, 700-2
Traffic control, 810-1
    channelization, 910-6
    intersections, 910-12
Traffic control plans, 810-9
Traffic control signals, 850-1
    control equipment, 850-8
    crosswalks and pedestrians, 850-8
    detection systems, 850-10
    electrical design, 850-15
    foundation design, 850-14
    funding, construction, maintenance, & operation, 850-3

intersection design considerations, 850-7
preemption systems, 850-11
preliminary signal plan, 850-14
signal displays, 850-12
signal phasing, 850-4
signal supports, 850-13
signal warrants, 850-4
strain poles, 850-14
third party agreement signals, 850-3
Traffic flow control, 860-3
HOV bypass, 860-4
ramp meters, 860-3
Traffic interchanges, 940-1
collector distributor roads, 940-9
connections, 940-6 through 940-9
design, 940-2
lane balance, 940-6
on two-lane highways, 940-10
patterns, 940-3
plans, 940-10
ramp design speed, 940-4
ramp grade, 940-5
ramp terminal intersections, 940-9
ramp terminals, 910-12
ramp widths, 940-5
ramps, 940-4
sight distance, 940-1 through 5
spacing, 940-4
weaving sections, 940-9
Traffic signal standards, 700-6
Traffic Systems Management Center (TSMC), 860-2
Transit benefit facilities, 1060-1
bus stops and pullouts, 1060-7
disabled accessibility, 1060-12
flyer stops, 1050-5
grades, 1060-11
intersection, 1060-11
lane widths, 1060-11
park and ride lots, 1060-1
passenger amenities, 1060-10
paving sections, 1060-10
priority preemption, 850-11
roundabouts, 915-13
transfer/transit centers, 1060-6
vehicle characteristics, 1060-11
Transitions and connections, traffic barrier, 710-10
Transitions, pavement, 620-4
Transportation Demand Management Office, 120-9
Transportation Facilities and Services of Statewide Significance, 120-6
Travel Demand Management Program (TDM), 120-12
Traveled way, 440-2, 640-2, 700-2
Traveled way cross slope, 640-2
Traveler services, 1030-1
Trees, 700-5
TREND impact attenuator, 720-5, 720-13
Truck
climbing lanes, 1010-2
escape ramps, 1010-4
weigh sites, 1040-1
Truck mounted attenuator, 720-5, 810-10
Tubular markers, 810-11
Turning path template, 910-14, 910-15, 910-16, 1060-23, 1060-24, 1060-35, 1060-36
Turning roadway widths, 640-2
HOV facilities, 1050-8, 1050-12
Turnbacks, limited access, 1430-11
Turnouts, 1010-3
Two-way left-turn lanes, 910-7
Type, approach, 1430-7

U

U-turns, 910-10
U.S. Coast Guard, 240-3, 1110-3
Uniformity of exit pattern, 940-4
Unmarked crosswalk, 1025-6
Urban Roadways, DM Supplement 7/22/2003
Utilities
agreements, 240-10
limited access, 1430-5, 1430-7, 1430-10
R/W transactions, 1410-4
Utility poles, 700-6
Utility road approach, 920-3

V

Value Engineering (VE), 315-1
implementation phase, 315-3
job plan, 315-5
procedure, 315-1
selection phase, 315-1
team tools, 315-7
Variance, design, 325-7
Vegetation, 1320-1
Vehicle turning path template, 910-14, 910-15, 910-16, 1060-23, 1060-24, 1060-35, 1060-36

Venture Washington, 860-1
Vertical alignment, 630-1
design controls, 630-1
length of grade, 630-2
maximum grades, 630-2
minimum grades, 630-2
minimum length of vertical curves, 630-2
structures, 630-2
Vertical clearance
new bridge, railroad, 1120-2
new bridge, roadway, 1120-2
pedestrian bridge, 1120-2
signing, bridge, 1120-3
structures, 1120-2

W

W-beam guardrail. *See Guardrail*
Walking and hiking trails, 1025-5
Walls, 1130-1
geotechnical investigation, 510-8
noise, 1140-2
retaining, 1130-1
Warrants, 850-4, 1010-2
Washington State Patrol
median crossovers, 960-2
weigh sites, 1040-1
Washington's Transportation Plan (WTP), 120-4, 120-8
Waste Sites, R/W, 1410-2
Watchable Wildlife Program, 120-12
Water, hazard, 700-6
Water quality, 240-6
Water-filled barriers, 810-9
Weaving sections, 940-9
Weigh sites, 1040-1
federal participation, 1040-4
permanent facilities, 1040-2
planning, development, and responsibilities, 1040-1
portable facilities, 1040-3
shoulder sites, 1040-4
Wetlands, 210-7, 220-5, 220-7, 220-8, 220-10, 220-11, 240-1, 1210-2
Wheelchair, 1025-4
Wide QuadGuard impact attenuator, 720-9
Wide REACT 350 impact attenuator, 720-11
Widening
pavement, 620-4
Width
bridge, 440-7
HOV facilities, 1050-8, 1050-11, 1050-12
lane, 430-1, 440-4
shoulder, 430-1, 440-4
Wildlife, Department of, 240-6
Wildlife warning reflectors, 830-5
Wire fencing, 1460-3
Work zone classification, 810-2
intermediate-term stationary work zones, 810-2
long-term stationary work zones, 810-2
mobile work zones, 810-2
short-duration work zones, 810-2
short-term stationary work zones, 810-2
Work zone safety, 810-6
flaggers, 810-6
road users, 810-7
workers, 810-6
Work zone traffic control, 810-1
Work zone types, 810-3
crossover, 810-3
detour, 810-3
intermittent closure, 810-3
lane closure, 810-3
lane constriction, 810-3
median use, 810-3
multiple lane separation, 810-3
shared right of way, 810-3
shoulder use, 810-3
temporary bypass, 810-3

Z

Zones, transition
shared use path, 1020-12