Washington State Department of Transportation

Publications Transmittal

Transmittal Number	Date
PT 04-068	November 2004
Publication Distribution	
To: All holders of the Utilities Manual	
Publication Title	Publication Number
Utilities Manual	M 22-87
Originating Organization	
Real Estate Services	

Important Note:
This update is applicable to Design Build Projects only.

Available On-Line:
This revision is only available electronically at the below address:
http://www.wsdot.wa.gov/fasc/EngineeringPublications/Manuals/UtilitiesManual.pdf

Who to Contact:
Please contact Tom Swafford at (360) 705-7237 with comments, questions, or suggestions for improvement to the Utilities Manual. Please contact Engineering Publications at (360) 705-7430 regarding distribution of the manual.

Instructions:
Page numbers and corresponding sheet-counts are given in the table below to indicate portions of the Utilities Manual that are to be removed and inserted to accomplish this revision.

Chapter	Remove		Insert	
	Pages		Pages	Sheets
Foreword			i-ii	1
Table of Contents	i-ii		i-ii	1
Chapter 3	All		3-1 - 3-6	3
Chapter 4	All		4-1 - 4-4	2
Chapter 6	All		6-1 - 6-2	1
Appendix 1	All		1-1 - 1-2	1
Appendix 2	All		2-1 - 2-2	1
Appendix 3	All		3-1 – 3-2	1
Appendix 4	All		4-1 – 4-2	1
Appendix 5	All		5-1 - 5-16	8
Appendix 6	All		6-1 –6-12	6

Distributed By	Phone Number	Signature
Directional Documents and Engineering Publications	(360) 705-7430 FAX: 705-6861	Stephanie Williams

Foreword

This manual is intended to provide guidance in accommodating utilities within state right of way in a manner as to not interfere with the free and safe flow of traffic or other wise impair the highway visual quality. This manual also gives guidance in the preparation of utility agreement and utility service agreements.

Updating this manual is a continuing process and revisions will be issued as required.

Questions or suggestions for modifications should be addressed to the Headquarters Real Estate Services Office. Address orders for manuals to

Administrative and Engineering Publications
Headquarters Transportation Building,
PO Box 47408
Olympia, Washington 98504-7408,
or telephone 360-705-7430.

Contents

Chapter 1 Permits and Franchises

Attachment 1-1 Flow Chart for Franchise Processing
Attachment 1-2 Checklist for Utility Permits and Franchises
Attachment 1-3 Instructions for Completing Forms and Exhibit Map Example

Chapter 2 Utility Agreements

Attachment 2-1 Flow Chart for Headquarters Utilities Section Utility Agreement Processing
Attachment 2-2 Transmittal Checklist for Headquarters Processed Agreements

Chapter 3 Railroads

Chapter 4 Service Agreements

Chapter 5 United States Government Agencies

Chapter 6 Vacant

Appendix 1 Vacant

Appendix 2 Vacant

Appendix 3 Vacant

Appendix 4 Program Guide: Utility Relocation and Accommodation on Federal-Aid Highway Projects"

Appendix 5 “Control Zone Guidelines — Utilities”

Appendix 6 “A Plan for Implementation of the Control Zone Guidelines”

Appendix 7 “Control Zone Distance Calculation Instructions”

Chapter 3 Railroads

3-1	General	3-3
3-2	Headquarters Railroad Liaison Responsibility	3-3
3-3	Region Railroad Responsibility	3-3
3-4	Agreements	3-4
3-5	WUTC Petitions	3-4
3-6	Grade Separation Structure	3-4
3-7	Maintenance of Highway Overcrossings	3-4
3-8	Headquarters Railroad Highway Grade Crossings	3-4
3-9	Railroad Insurance and Flagging	3-5
3-10	Construction Administrative Responsibility for Railroad - Related Projects	3-5
3-11	Construction Drawings	3-5
3-12	Right of Way	3-5
3-13	Pipe, Pole, or Wire Line Occupancy Permit	3-6
3-14	Abandoned Railroad Lines	3-6
3-15	Temporary Railroad Crossings	3-6
3-16	Railroad Billings	3-6

3-1 General

Railroad negotiations require extended time and effort to complete and therefore need the earliest possible attention of Regional and HQ personnel. It may take six months or more to complete an agreement. If a project involves a railroad make early contact with both the railroad and the HQ Railroad Liaison.

3-2 Headquarters Railroad Liaison Responsibility

The HQ Railroad Liaison is responsible for the following railroad matters:

.01 Providing liaison between the Department and the railroad.

.02 Transmitting proposed work data to the railroad.

.03 Arranging meetings with railroads as requested by the Regions

.04 Negotiating, developing, reviewing, writing, and processing railroad agreements.

.05 Keep Regional Utility Engineer informed on Railroad Agreements under development.

.06 Authorizing the railroad to begin work.

.07 Assisting Regions in railroad matters.

.08 Assisting in railroad right of way matters. Primary responsibility for this function belongs to HQ Real Estate Services.

.09 Administering the WSDOT Grade Crossing inspection program

.010 Administering Section 130 grade crossing projects at discretion of Region.

3-3 Region Railroad Responsibility

The Regional Administrator has typically assigned the Region Utilities Engineer as the individual in the Region responsible for railroad matters. The Region Utilities Engineer is responsible for the following items:

.01 Advising the HQ Railroad Liaison of any project with railroad involvement.

.02 Maintaining a record/files of Region railroad involvements.

.03 Maintaining working contact with the HQ Railroad Liaison.

.04 Furnishing the HQ Railroad Liaison with complete information and plans (3 copies of all plans, maps, attachments) for use in contacting the railroad in order to secure necessary agreement, approvals and information. The HQ Railroad Liaison keeps the Regions informed of any follow-up action required, including meeting with railroad officials if requested or required.

.05 Reviewing draft final railroad agreements as provided by HQ Railroad Liaison.

.06 When designated by the Region Administrator, the Utilities Engineer is responsible to perform the construction administration of the agreement in accordance with Section 3-10.

.07 Report to HQ when project is completed.

3-4 Agreements

Formal agreements with the railroad are required on all projects where a railroad will be reimbursed for work done at State request for example placing and removing track protection. Agreements are usually not required on bridge overlay projects where the work will take place entirely inside bridge railings and our contractor will not need to access railroad property. When a formal agreement is necessary, the HQ Railroad Liaison will negotiate an agreement with the railroad and prepare it in accordance with the Agreements Manual M22-99.

3-5 WUTC Petitions

If the project involves modification of a railroad grade crossing in any manner a WUTC petition will be required. The WUTC regulates safety at all Washington grade crossings not in first class cities. The HQ Railroad Liaison will coordinate with the WUTC and assist with preparation of the petition. The Region must provide the roadway and traffic data required by the petition. Once the petition is complete the HQ Railroad Liaison signs it and forwards appropriate copies to the WUTC or to the respondent depending on conditions. When the WUTC completes their review and issues an order they will return it to the HQ Railroad Liaison who will retain a copy for his records and forward a copy to the Region Utility Engineer.

3-6 Grade Separation Structure

The Region should contact the HQ Railroad Liaison as early as possible for each bridge project that affects railroad facilities. Sufficient information and plans must be provided by the Region to permit the railroad to review the proposal and for HQ Railroad Liaison to develop an agreement.

3-7 Maintenance of Highway Overcrossings

If a bridge is covered by a Construction, and Maintenance Agreement, the State has access to the structure for maintenance purposes as defined in the agreement. If access is required from railroad property beneath the structure, that is typically dealt with by a separate permit or agreement.

Region Utility Engineers should establish good working relationships with roadmasters for railroads in the Region. When a project is under development it is advisable to contact the Roadmaster and go over the work anticipated on, under, or above railroad properties, what method of access is acceptable, and the extent of protective services that the railroad may require. The Region should keep the HQ Railroad Liaison informed on any such discussions.

3-8 Headquarters Railroad Highway Grade Crossings

The intersection of railroad lines with streets and highways at-grade introduces the potential for serious accidents as well as troublesome and costly delays. These problems can be minimized or eliminated through appropriate improvements of grade crossings, including traffic control devices.

Grade crossing projects can be initiated by WSDOT, a railroad company, or the WUTC. Grade crossings are most often selected for improvement through the Federal categorical program (Section 130 Funding). The Section 130 Program is managed by WSDOT Highways & Local Programs.

For coordination of grade crossing work within the limits of a WSDOT project the Region should contact the railroad roadmaster and discuss the proposed work. Contact information for most railroads in Washington is available at http://www.wsdot.wa.gov/Rail/information/railcontacts.cfm. If necessary the Region should meet the roadmaster onsite to discuss the work. It is a good idea to keep the HQ Railroad Liaison informed of these discussions.

Additional information concerning highway-railroad grade crossings is contained in the Design Manual, Chapter 930, "Railroad Grade Crossings."

3-9 Railroad Insurance and Flagging

Railroad insurance and flagging will likely be required in connection with construction of highway projects where any portion of the work is within railroad right of way. The General Special Provision, Relations with the Railroad provides this information. If there are any questions regarding this refer them to the HQ Railroad Liaison.

Railroad flagging is seldom covered under an agreement since it is difficult to accurately estimate the hours that will be required and it is dependent on type of work activity, duration, proximity to rails, and the railroad's discretion. Flagging costs from the railroad, which are not associated with a formal agreement, should be charged to a separate group in Group Category 99 (Vendor Supplied Services and Materials). The group should be set up not to accept labor (Labor N) as the group will only be used when making payments to the railroad for flagging.

3-10 Construction Administrative Responsibility for Railroad-Related Projects

The Region is responsible for all work conducted under a railroad agreement from the date the railroad is authorized to proceed through completion of the work, closing of the agreement, and completion of final audit.

Billings for work completed are mailed to the Region Utilities Engineer. The Region Utilities Engineer arranges for payment directly to the railroad following assurance from the project office that the billing is consistent with work completed.

3-11 Construction Drawings

Anything built for the railroad or on the railroad's property by the State's contractor requires the railroad company's approval. Such approvals may include steel fabrication shop drawings, welding procedures, falsework plans, shoring plans, demolition plans, drainage plans, etc.

3-12 Right of Way

Work by the State on railroad property requires that the State have a property right, which the railroad generally grants by easement or temporary occupancy permit. HQ Real Estate Services is responsible for obtaining property rights from the railroads. The HQ Railroad Liaison assists as needed. WSDOT employees who will be working on railroad right of way will need to comply with safety requirements of the railroad which may include a short training class, steel toed boots, hard hats, and high visibility safety clothing. Specifics differ from one railroad to another.

3-13 Pipe, Pole, or Wire Line Occupancy Permit

These permits are completed by the Region Utility Engineer. In some cases it is possible to convince the railroad there are mutual benefits for the requested installation, in which case there may be no charge for the permit. The Region should keep track of the various permits issued by assigning each one a Region service agreement number.

3-14 Abandoned Railroad Lines

Upon notification that a railroad line has been abandoned (taken out of service), tracks and signals at grade crossings should be removed as soon as possible. Questions regarding status of rail lines and grade crossings should be addressed to the HQ Railroad Liaison.

3-15 Temporary Railroad Crossings

Temporary at-railroad grade crossings are occasionally required as the result of a highway construction project. The Region should submit requests for a temporary crossings to the HQ Railroad Liaison. A vicinity map, an alignment or right-of-way plan and cross section will be required. The HQ Railroad Liaison will assist the Region by negotiating and developing an agreement covering the terms and conditions for construction and use of the temporary crossing.

3-16 Railroad Billings

Billings from the Railroad are received by the Region Utility Engineer or the office assigned to administer the agreement. The Region is responsible for ensuring that the costs billed by the railroad are accurate and in conformance with the agreement. Costs should be clearly identified on a detailed billing. If a billing is inaccurate or incomplete the Region is responsible for sending a response to the railroad detailing the deficiencies.

Chapter 4 Service Agreements

4-1 Service Agreements 4-3

.01 General 4-3

.02 Agreement Number 4-3

.03 Approval Authority 4-3

.04 Distribution of Agreement 4-4

4-1 Service Agreements

A service agreement is entered into whenever the Department requires a utility service (water, power, sewer, etc.). Service agreements may or may not have a cost associated with them.

.01 General

The service agreement consists of an exchange of letters prepared in a legal format, similar to that shown in Example 4-2, with the appropriate plan sheets or sketches attached as exhibits.

It is important that the Region's letter to the utility clearly describes the service required and that the utility's reply responds directly to the Region's letter in terms of the services performed. Information provided to the utility should include the responsible project engineer during construction, the responsible maintenance office once construction is completed, or the transit authority, agency, city, or county, that will assume billing responsibility after project completion. Billing addresses for all appropriate offices or agencies are included in the letter. Provide information to the utility stating which charges are to be sent to which address.

If there is a cost associated with the requested service, the utility's letter of reply must address terms for reimbursement (lump sum or actual cost) and include an itemized estimate of cost to support the reimbursement figure. Lump sum agreements are limited to a maximum of $25,000.

.02 Agreement Number

The Region assigns the agreement number. The number consists of a two-letter prefix followed by five characters that can be either letters or numbers or any combination thereof.

Definitions:

(a) First letter "S" stands for service.

(b) Second letter designates the Region. "A" - Northwest Region, "B" - North Central Region, "C" Olympic Region, "D" Southwest Region, "E" - South Central Region, and "G" - Eastern Region.

(c) The remaining 5 characters, either letters or numbers, are assigned at the Region's option to denote a specific meaning and/or location.

.03 Approval Authority

(a) The Region is authorized to enter into and execute service agreements with an initial cost of $250,000 or less, ($25,000 for lump sum agreements). Service agreements on Interstate and Federal Aid projects, where the Region does not have design approval, are submitted to the Headquarters Utilities Section to obtain FHWA approval. Service agreements, not consistent with the format noted in Section 4-3.01, which contain a cost associated with the requested service, are first sent to the Headquarters Utilities Section for review. The Headquarters Utilities Section will obtain approval as to form by the Attorney General's Office. Upon notification of approval by the Headquarters Utilities Section and approval as to form (if applicable), the Region may execute the agreement.

Facilities provided by the utility under the service agreement inside State right of way, that will be covered by a permit or franchise and are not consistent with the approval authority for permits and franchises as contained in Chapter 1 of this manual, require approval through the Headquarters Utilities Section. These facilities are subject to the same policy requirements for permits and franchises as set forth by law, administrative codes, and the Department.

(b) If the utility's construction costs associated with the service request are over $250,000, the Region initiates the exchange of letters with the utility constituting the service agreement and submits the original and four copies (five copies on Interstate and Federal Aid projects where the Region does not have design approval) to Headquarters for approval.

1. New highway and plant facilities (for example, new service to illumination, signal, water, or sewer, etc. for rest area or park and ride lot). The request is submitted to the Headquarters Utilities Section for approval of the service agreement.
2. Temporary connections and alteration of services to existing facilities (for example, change in service to existing signal, rest area, or maintenance building). The request for approval of the service agreement by the State Maintenance Engineer are submitted directly to the Headquarters Operations and Maintenance Office.

.04 Distribution of Agreement

Distribution of the service agreement following execution:

(a) Original to Region Accounting Section, or other regional section as policy dictates, for retention as the Department Record of Agreement. Headquarters approved service agreements are returned to the Regional Utilities Engineer for distribution following approval.

(b) Duplicate original to the utility (through the Region Utilities Engineer if approved at Headquarters).

(c) One copy to the Headquarters Project Development Office by the Region Utilities Engineer when the service agreement is in conjunction with a project that is or will be reviewed by that office. A copy is sent to the Region Plans Office when the project is one that has Regional design approval.

(d) One copy to FHWA, through the Headquarters Utilities Section, by the approval authority for projects involving federal aid on the Interstate Highway System and Federal Aid projects where the Region does not have design approval.

This chapter is currently vacant.

Vacant

Appendix 1 Vacant

This chapter is currently vacant.

Appendix 2 Vacant

This chapter is currently vacant.

Appendix 3 Vacant

This chapter is currently vacant.

Appendix 4 Utility Relocation and Accommodation

This appendix has been replaced with the "Program Guide: Utility Relocation and Accommodation on Federal-Aid Highway Projects" Sixth Edition- January 2003.

Please see the link below for it's entirety.

http://www.fhwa.dot.gov/reports/utilguid/

Appendix 5 Control Zone Guidelines — Utilities

I. Introduction 5-3

Purpose 5-3

Rules 5-3

II. Control Zone Guidelines — Utilities 5-3

Introduction 5-3

Purpose 5-3

Definitions 5-4

Control Zone Distance Table 5-8

Recovery Area 5-9

Control Zone for Ditch Sections 5-10

Supplemental Information 5-11

Utility Design Considerations 5-11

Guidelines for Embankment Barrier 5-14

I. Introduction

A. Purpose

To provide guidance pertaining to procedures to be used to process requests for utility occupancy of Washington State Department of Transportation (WSDOT) rights of way.

II. Rules

A. Utility facilities are to be accommodated in accordance with the guidelines in Part III, below.

B. It is not WSDOT's intent to force utilities off the rights of way, therefore, it is critical for Headquarters and Regions to work cooperatively with the utilities in implementing these guidelines. It will be necessary for the districts to help the utilities understand WSDOT terminology, traffic data, and sideslope calculations.

C. It will be necessary for the Regions to work closely with the utilities in the following ways:

1. Assisting the utilities in determining how their new construction or reconstruction facility can be outside the control zone, covered by a variance or designated as Location III Objects.
2. Assisting the utilities on highway projects to ensure they are not adjusting their facility beyond the scope of the highway work.
3. Assisting the utilities with franchise renewals or consolidations and ensuring that they are adjusting or protecting those facilities where corrective action is necessary.

II. Control Zone Guidelines — Utilities

Introduction

It has been recognized that it is in the public interest for utility facilities to jointly use the right of way of public roads and streets when such use and occupancy does not interfere with the primary purpose of the highway. As a result, the highways right of way can be used to transmit and distribute utility services for the benefit of the public as well as to serve conventional highway needs.

WSDOT is charged with overall supervision and administration of the state's highway system. This includes planning, operation, design, construction, economics, safety, and accommodation of utility facilities on state public highway right of way. Guidelines which govern where utilities may be placed within the public right of way must be developed.

These guidelines will be reviewed with the utility periodically for workability and updated as the need arises.

Purpose

It is WSDOT's policy to accommodate utilities within the highway right of way when such use of the right of way is consistent with the provisions of federal, state, or local laws or regulations. These guidelines are developed to provide direction as to when and how utilities may use WSDOT's public highway right of way. It is not

the intention of these guidelines to force utilities to relocate outside the state highway right of way. Safety improvements accomplished as a result of these guidelines will help maintain highway safety in the future.

Utility services are in the public's interest and every effort should be made to accommodate utilities, as cost-effectively as possible, while maintaining public safety.

These guidelines are in accordance with the American Association of State Highway and Transportation Officials (AASHTO), National Research Council, the Federal Highway Administration (FHWA), and WSDOT philosophies.

Definitions

Alternate Countermeasures

Alternatives to the relocation of non traversable utility objects to outside the Control Zone, including:

- Putting utility lines underground.
- Increasing the lateral offset of utility objects from the edge of the traveled way.
- Locating to an inaccessible area, such as toward the top or on top of cut slopes.
- Reducing the number of utility objects through joint use, increased span lengths and/or placing utility objects on only one side of the road.
- Installing protective devices, such as berms, guardrail, traffic barriers or impact attenuators.
- Using a breakaway design.

Auxiliary Lane

An auxiliary lane is that portion of the roadway adjoining the traveled way for parking, speed change, turning, storage for turning, weaving, truck climbing, or for other purposes supplementary to the traveled way.

Control Zone

That roadside area as defined by the "Control Zone Distance Table" within the highway right of way in which placement of utility objects is controlled.

Cost-Effectiveness Selection Procedure

A rational methodology developed by AASHTO for comparing roadside improvement alternatives. AASHTO's methodology, published as Appendix A to its 2002 Roadside Design Guide, can be used manually or through a computer program that is available. It allows its user to predict the total costs associated with specific traffic and roadway conditions and to select the most appropriate alternative. See Attachment A

Location I Objects

Utility objects located within the Control Zone in the following areas are normally considered Location I Objects unless classified as a Location III Object:

- Outside of horizontal curves where advisory signed speeds for the curve are 15 or more MPH below the posted speed limit of that section of highway. The Control Zone distance is established using the posted speed limit of the highway, not the advisory speed limit.
- Within the turn radius area of public grade intersections. See item 2, "Supplemental Information Utility Design Consideration."
- Where a barrier, embankment, rock outcropping, ditch or other roadside feature is likely to direct a vehicle into a utility object.

- Closer than five feet horizontal beyond the edge of the usable shoulder.

Location II Objects

All utility objects located within the Control Zone that are not classified as Location I or Location III Objects.

Location III Objects

Utility objects located outside the Control Zone, objects within the Control Zone that are mitigated by an Alternate Countermeasure, or Location II objects that have been classified as Location III Objects using the Cost Effectiveness Selection Procedure. See Attachment A.

Slope: Back

The slope extending from the bottom of a ditch away from the highway.

Slope: Fore

The slope extending from the highway shoulder into the ditch.

Traveled Way

That portion of the roadway intended for the movement of vehicles, exclusive of shoulders, auxiliary lanes, and detour routes.

Usable Shoulder

That portion of the roadway extending beyond the edge of the traveled way, or auxiliary lanes when provided, that can be used when a driver makes an emergency or parking stop. The usable shoulder is the average width being used as a shoulder along a section of highway, exclusive of intermittent widened areas but not to exceed ten feet in width.

Utility Object

Utility objects are defined for the purpose of these guidelines as utility facilities that exist above ground and are located within state highway right of way.

Utility Reconstruction

Where more than 25 percent of the poles or towers within any mile are replaced. Does not include periodic pole or tower replacement.

Application

Under the Control Zone Guidelines, all new utility objects will be constructed outside the Control Zone unless they are covered by a variance (discussed below) or are Location III Objects. In addition, utilities will be responsible for the systematic treatment of existing utility objects that are located in the Control Zone. Each utility will be required to relocate or mitigate a certain number of existing objects each year by addressing existing objects during WSDOT highway projects, Utility Reconstruction, and through a program of systematic studies of its objects.

1. Utility Reconstruction

   During Utility Reconstruction the utility will relocate all utility objects to outside the Control Zone unless they are classified as Location III Objects or a variance is granted.

2. State Highway Improvement Projects

   During the planning phase of state highway improvement projects, WSDOT will inform the utility that they may have to or must adjust utility objects that, either prior to or as the result of the project, are located in the Control Zone.

a. For projects where the state does not address safety items, Any individual Location I Objects which demonstrate a need for adjustment will be adjusted before or during the project.

b. For projects where the state addresses safety item(s), the utility shall adjust Location I Objects and may be required to adjust Location II Objects to qualify as Location III Objects. Objects requiring relocation to Location III Objects in order for the project to be completed (e.g., because the highway is to be widened), should be adjusted before or during the project.

   If it is determined, through an engineering analysis, that a Location I Object cannot be moved to Location III or mitigated, a variance may be granted.

Through an engineering analysis and the "Cost Effective Selection Procedure" it will be determined whether a Location II Object will be moved to Location III, or mitigated or reclassified.

WSDOT will notify the utilities of upcoming highway improvement projects as early as possible. As the project is planned, the utility will be advised of the tentative scheduled project advertising date and of those utility objects requiring relocation. When available, a copy of the Roadside Clear Zone Inventory sheet will be provided.

Variance

WSDOT recognizes that conditions may arise which make it impractical to comply with the maximum Control Zone. Variances from such compliance may be allowed when justified by suitable utility engineering studies considering traffic safety.

Examples of conditions rendering compliance impractical include:

- WSDOT right of way that is not adequate to accommodate utility objects outside the Control Zone; and
- Segments of utility facilities that, due to terrain or other features, do not warrant being located in full compliance with the maximum Control Zone. In these situations, a variance, if adequately supported, may be granted by WSDOT to allow utility objects to remain or to be installed within the Control Zone.

Any variance request must include, as a minimum, the following support data:

- Reason object should not be located as Location III.
- Evidence that installation in an alternate location outside the Control Zone or right of way is extremely difficult because of installation problems and/ or is unreasonably costly (show detailed cost comparison). Describe alternatives that were considered.
- Pictures and typical cross sections. Cross-sections to include location of proposed and existing utility objects with reference to the edge of the traveled way.
- Address use of the Alternate Countermeasures.

Criteria

The Control Zone distance varies according to the posted speed, traffic volumes, and side slopes of the highway. This Control Zone distance is measured in feet normal to the highway, beginning at the edge of the traveled way and extending outward perpendicular to the traveled way.

The Control Zone distance can be determined using the Control Zone Distance Table and the following criteria:

1. Cut Sections with no ditch and fill sections.

   The Control Zone distance is read directly from the table based on posted speed, average daily traffic (ADT), and slope. The "Recovery Area" formula, in lieu of the table, is used ONLY when the fill section slope is 3:1 or steeper. If the fill height is also greater than 10 feet, consult the Guidelines for Embankment Barrier Chart. If embankment barrier is not recommended, the Control Zone is the Shoulder Width plus the Horizontal Distance.

2. Ditch Sections with fore slopes 4:1 or flatter.

   The Control Zone distance is the greater of:

   a. The Control Zone distance for a 10:1 cut section based on speed and ADT, or

   b. Five feet horizontal beyond the beginning of the back slope.

3. Ditch Sections with fore slopes 3:1 or steeper, and back slopes steeper than 3:1.

   The Control Zone distance is established at 10 feet horizontal beyond the beginning of the back slope.

4. Ditch sections with fore slopes 3:1 or steeper, and back slopes not steeper than 3:1. The Control Zone distance is the distance established using the recovery area formula.

5. Auxiliary Lanes.

   The Control Zone is either the distance from the traveled way obtained from the table based on posted speed, ADT, and slope, or ten feet from the edge of the auxiliary lane, whichever is furthest. Where curb exists, the Control Zone is two feet beyond the face of curb for speed zones of 35 mph or less.

Control Zone Distances for State Highways Outside Incorporated Cities**
(In feet from edge of traveled way***)

Posted Speed mph	Average Daily Traffic	Cut Section (Back Slope) (H:V) 3:1	4:1	5:1	6:1	8:1	10:1	Fill Section (H:V) 3:1	4:1	5:1	6:1	8:1	10:1
35 or Less		The Control Zone-distance is 10 feet											
40	Under 250	10	10	10	10	10	10	*	13	12	11	11	10
	251-800	11	11	11	11	11	11	*	14	14	13	12	11
	801-2000	12	12	12	12	12	12	*	16	15	14	13	12
	2001-6000	14	14	14	14	14	14	*	17	17	16	15	14
	Over 6000	15	15	15	15	15	15	*	19	18	17	16	15
45	Under 250	11	11	11	11	11	11	*	16	14	13	12	11
	251-800	12	12	13	13	13	13	*	18	16	14	14	13
	801-2000	13	13	14	14	14	14	*	20	17	16	15	14
	2001-6000	15	15	16	16	16	16	*	22	19	17	17	16
	Over 6000	16	16	17	17	17	17	*	24	21	19	18	17
50	Under 250	11	12	13	13	13	13	*	19	16	15	13	13
	251-800	13	14	14	15	15	15	*	22	18	17	15	15
	801-2000	14	15	16	17	17	17	*	24	20	18	17	17
	2001-6000	16	17	17	18	18	18	*	27	22	20	18	18
	Over 6000	17	18	19	20	20	20	*	29	24	22	20	20
55	Under 250	12	14	15	16	16	17	*	25	21	19	17	17
	251-800	14	16	17	18	18	19	*	28	23	21	20	19
	801-2000	15	17	19	20	20	21	*	31	26	23	22	21
	2001-6000	17	19	21	22	22	23	*	34	29	26	24	23
	Over 6000	18	21	23	24	24	25	*	37	31	28	26	25
60	Under 250	13	16	17	18	19	19	*	30	25	23	21	20
	251-800	15	18	20	20	21	22	*	34	28	26	23	23
	801-2000	17	20	22	22	23	24	*	37	31	28	26	25
	2001-6000	18	22	24	25	26	27	*	41	34	31	29	28
	Over 6000	20	24	26	27	28	29	*	45	37	34	31	30
65	Under 250	15	18	19	20	21	21	*	33	27	25	23	22
	251-800	17	20	22	22	24	24	*	38	31	29	26	25
	801-2000	19	22	24	25	26	27	*	41	34	31	29	28
	2001-6000	20	25	27	27	29	30	*	46	37	35	32	31
	Over 6000	22	27	29	30	31	32	*	50	41	38	34	33
70	Under 250	16	19	21	21	23	23	*	36	29	27	25	24
	251-800	18	22	23	24	26	26	*	41	33	31	28	27
	801-2000	20	24	26	27	28	29	*	45	37	34	31	30
	2001-6000	22	27	29	29	31	32	*	50	40	38	34	33
	Over 6000	24	29	31	32	34	35	*	54	44	41	37	36

* When the fill section slope is steeper than 4H:1V but not steeper than 3H:1V, the Control Zone distance is modified by the recovery area formula and is referred to as the recovery area. The basic philosophy behind the recovery area formula is that a vehicle can traverse these slopes but cannot recover (control steering) and, therefore, the horizontal distance of these slopes is added to the Control Zone distance to form the recovery area.

** This figure also applies to limited access state highways in cities and median areas on managed access state highways in cities. See Design Manual 700.04 for guidance on managed access state highways within incorporated cities.

*** traveled way The portion of the roadway intended for the movement of vehicles, exclusive of shoulders and lanes for parking, turning, and storage for turning.

Control Zone Distance Table

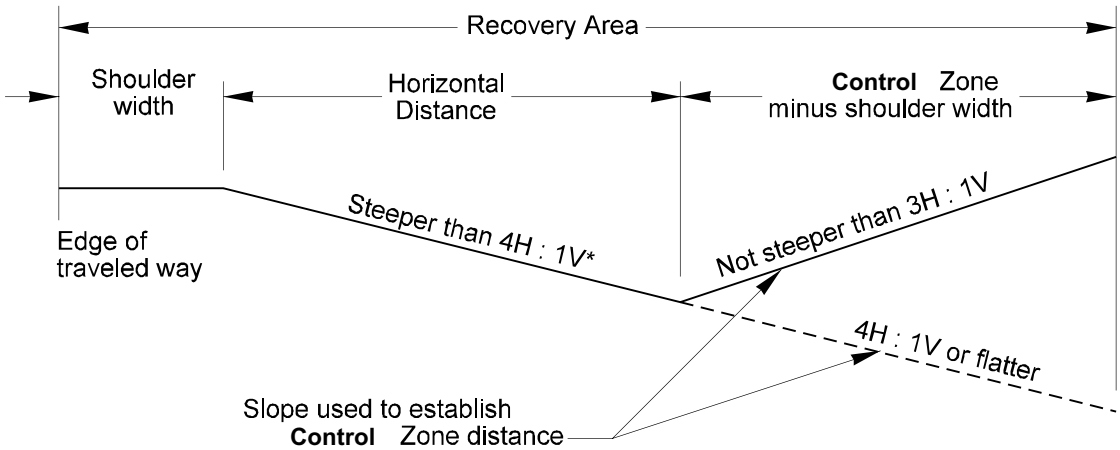

This diagram is intended to clarify the use of Recovery Area formula.

*Recovery area normally applies to slopes steeper than 4H:1V but no steeper than 3H:1V. For steeper slopes, the recovery area formula may be used as a guide if the embankment height is 10 ft or less.

Formula:

Recovery area = (shoulder width) + (horizontal distance)
+ (Control Zone distance - shoulder width)

Example:

Fill section (slope 3H:1V or steeper)

Conditions: Speed - 45 mph

Traffic - 3000 ADT

Slope - 3H:1V

Criteria: Slope 3H:1V - use

Recovery area formula

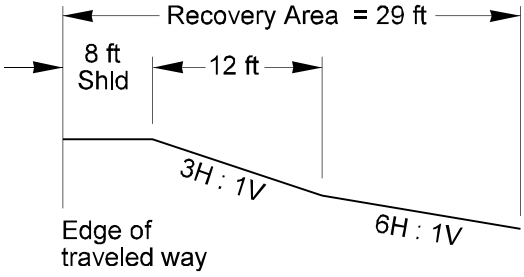

Recovery area = (shoulder width) + (horizontal distance)
+ (Control Zone distance - shoulder width)

= 8 + 12 + (17 - 8)

= 29 ft

Recovery Area

Cut section with ditch (foreslope 4H:1V or flatter)

Conditions: Speed - 55 mph

Traffic - 4200 ADT

Slope - 4H:1V

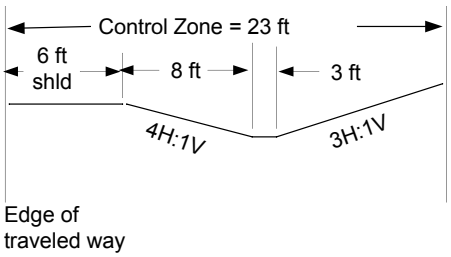

Criteria: Greater of

(1) Control Zone for 10H:1V Cut Section, 23 ft

(2) 5 ft horizontal beyond beginning of back slope, 22 ft

Control Zone = 23 ft

Case 1

Cut section with ditch (foreslope 3H:1V or steeper and back slope steeper than 3H:1V)

Conditions: NA

Criteria: 10 ft horizontal beyond beginning of back slope

Control Zone = 19 ft

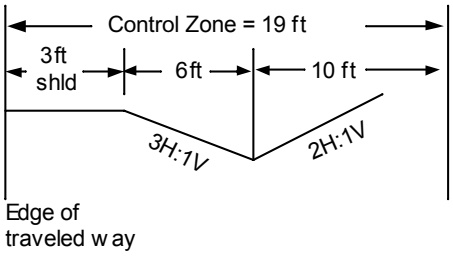

Case 2

Cut section with ditch (foreslope 3H:1V or steeper and back slope not steeper than 3H:1V)

Conditions: Speed - 45 mph

Traffic - 3000 ADT

Foreslope - 2H:1V

Back slope 4H:1V

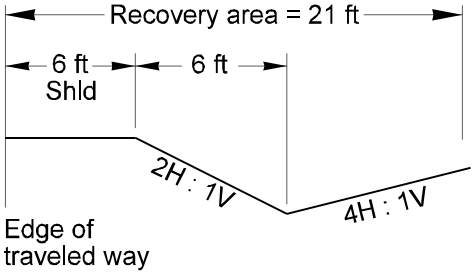

Criteria: Use recovery area formula

Recovery Area = (shoulder width) + (horizontal distance) + (Control Zone distance - shoulder width)

= 6 + 6 + (15 - 6)

= 21 ft

Case 3

Control Zone for Ditch Sections

Supplemental Information

Utility Design Considerations

The following items are provided as a guide to the Utility Industry for consideration during design and maintenance of their facilities:

1. Horizontal Curves. If it is not necessary, do not place utility objects on the outside of horizontal curves.
2. Public Grade Intersections. If possible, design the facility to place utility objects outside the turn radius area of Public Grade Intersections, if this is not possible the facility should be placed outside of the control zone.

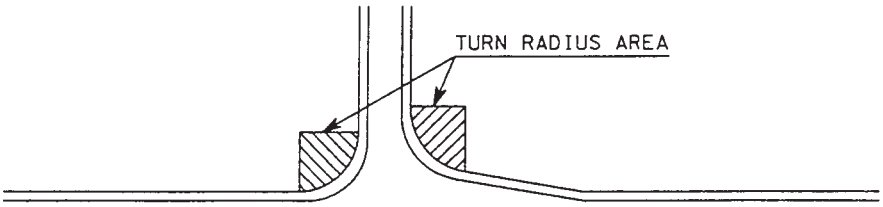

3. Placement of Utility Objects behind Guardrail. Allow a minimum of 3.5 feet from face of guardrail to face of utility object. This allows the guardrail to function properly if struck (acts as a tension ribbon).
4. Service Poles. Place service poles on owners property, not state right of way Consideration should be given to placing the service pole as far as practical from the highway right of way--at least outside the control zone.
5. Pole Design. Where control zone requirements within the highway right of way are tight, consideration should be given to alternate pole designs. The purpose of the alternate designs is to allow construction at/or close to the right of way line.

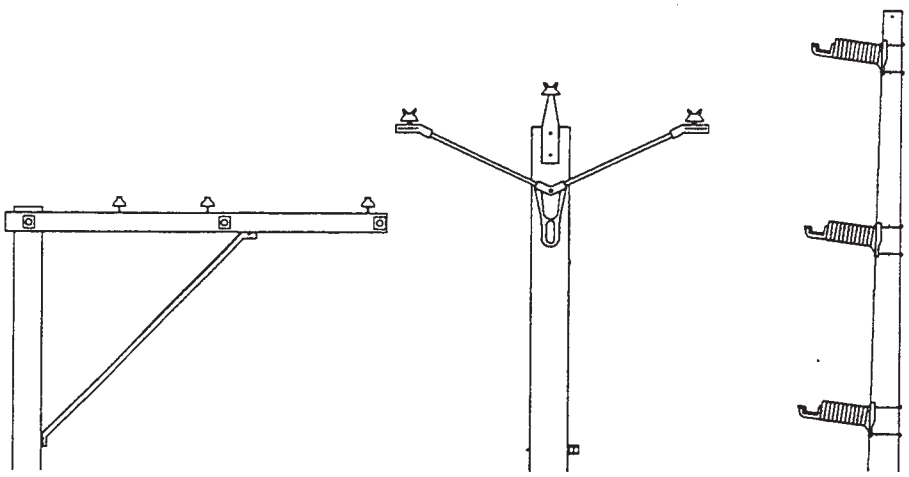

6. Guy Poles/Wires. Guy poles and/or wires are not to be installed between the pole line and highway lanes unless the guy pole/wire is outside the control zone. Consideration should be given to utilizing breakaway designs on guy poles within control zones.
7. Utility Location Markers. Markers used to identify or protect utility facilities, such as a telephone pedestal, may not be larger than a 4 X 4 wood post unless drilled to accommodate breakaway. Solid markers, such as concrete, may not be used. Telephone pedestals that meet the breakaway criteria are acceptable to be placed within the control zone.

POST SIZE	NO. OF POSTS	HOLE DIA
	4 x 4	—
	4 x 6	**1 1/2"**
	6 x 6	**2"**
	6 x 8	**3"**

See Standard Plan G-4a- Timber Sign Support

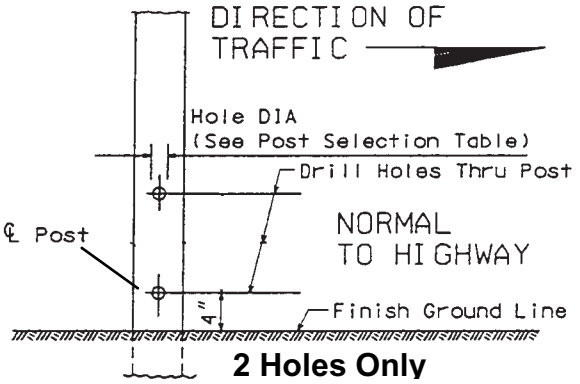

POST DETAIL
Typical for 4" x 6" to 6" x 8" Posts

Note: Posts that are larger than 6" X 8" require barrier protection when located within the Control Zone.

8. Cutting/Trimming Trees and Brush.

   Mutual benefits can be achieved through clearing trees and brush to the state's right of way line:

   a. Allows installation of the utility facility at/or close to the right of way line.
   b. Provides better access to the utility for construction and maintenance of their facility.
   c. Improves safety. Removes trees, which in themselves may be a hazard, and also opens up the roadway to increased sunlight.

   For aesthetics and other reasons listed above, it is often preferred that the trees be removed flush with the ground rather than topped or trimmed. Prior to cutting or trimming trees and brush the utility should coordinate and receive approval from the appropriate District Utilities Engineer.

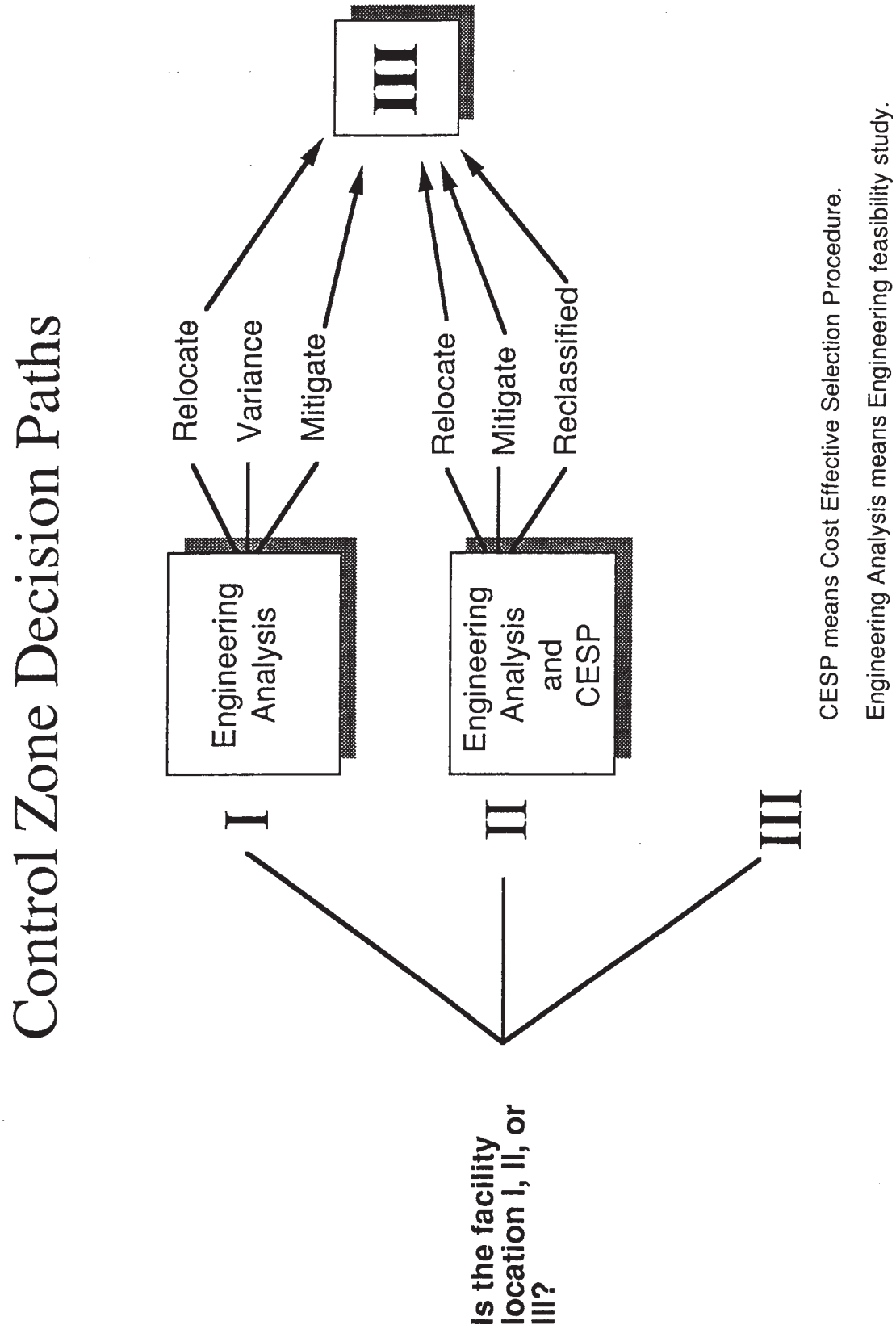
Control Zone Decision Paths
Is the facility location I, II, or III?
I
II
III
Engineering Analysis
Relocate
Variance
Mitigate
Engineering Analysis and CESP
Relocate
Mitigate
Reclassified
III
CESP means Cost Effective Selection Procedure.
Engineering Analysis means Engineering feasibility study.

Attachment A

Process to Determine if A Location 2 Object is Cost Effective to Relocate

1. In a fill area check the chart below, if guard rail is warranted the object may be considered not cost effective to relocate.

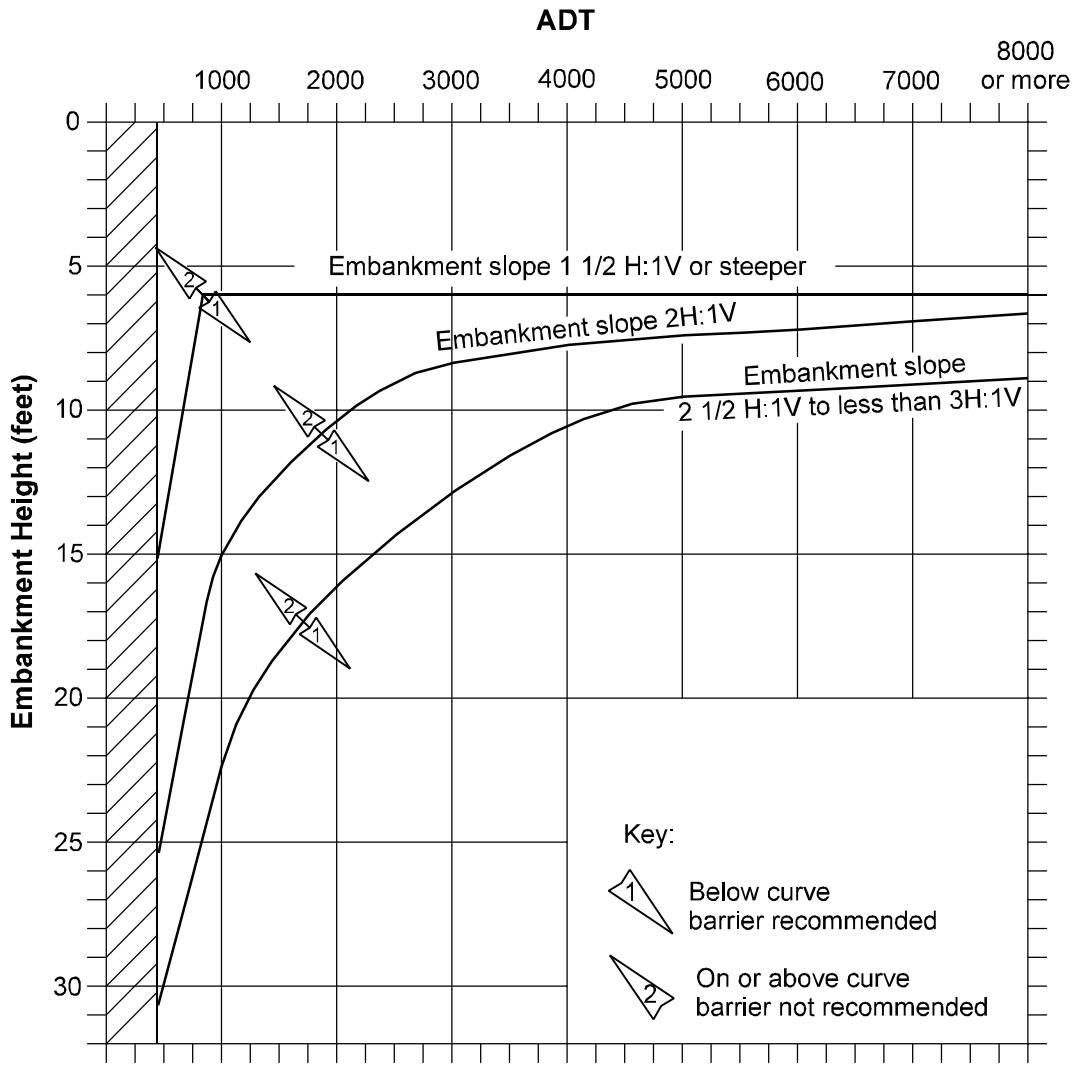

Note: Routes with ADTs under 400 may be evaluated on a case by case basis.

Guidelines for Embankment Barrier

2. Complete the Cost-Effective Selection Procedure for objects not in an area recommended for guardrail using the AASHTO formula. The lateral placement form the traveled way to the objects (for both the existing object and the relocated object) should be adjusted as follows for the side slopes.

Cut Slope				**Fill Slope**		
3:1	4:1	5:1	Flat	5:1	4:1	3:1
1.5	1.2	1.1	1.0	0.8	0.7	0

Adjusted lateral distance = (lateral distance – shoulder width) x the slope factor + shoulder width.

(Each slope between the shoulder and the existing object or relocated object should be adjusted by its factor.)

Variables for the Cost Effective Selection Procedure:

The following AASHTO cost factors will be used in the CESP formula until notified by WSDOT.

1. Fatality cost $1,000,000
2. Severe injury cost $200,000
3. Moderate injury cost $12,500
4. Slight injury cost $3,750
5. PDO level 2 cost $3,125
6. PDO level 1 cost $625

Traffic Growth Rate: Use 5% unless otherwise indicated by WSDOT.

Severity Index: 3.6 for 40 mph, 4.2 for 50 mph, 5.0 for 60 mph, and 6.0 for 70 mph.

Project Life: Life of the existing or new pole.

Discount Rate: The rate shall be equal to the weighted rate average cost of capital for each utility.

Cost of Installation: Determined by the utility for the installation being evaluated.

Cost of Repair: Determined by the utility for the installation being evaluated.

Maintenance Cost per Year: Determined by the utility for the installation being evaluated.

Salvage Value: Determined by the utility for the installation being evaluated.

The initial encroachment for frequencies should be as follows:

Highway Type	**Initial Encroachment Frequency (encroachment/mile/year)**
Rural Interstate	0.0009 ADT
Rural Multilane Divided Highway	0.00059 ADT
Wide Rural Two-Lane Highway (Roadbed ≥ 36 ft.)	0.000742 ADT
Narrow Rural Two-Lane Highway (Roadbed < 36 ft.)	0.00121 ADT
Urban Interstate	0.0009 ADT
Urban Multilane Divided Highway	0.0009 ADT
Urban Street	0.00133 ADT

Appendix 6 A Plan for Implementation of the Control Zone Guidelines

Goal 6-3

Terms 6-3

Control Zone 6-3

Mitigated Object 6-3

Location I Objects 6-3

Location II Objects 6-3

Location III Objects 6-3

Alternative Measures 6-3

Control Zone Distance 6-4

Cost Effective Selection Procedure 6-4

Engineering Analysis 6-4

Control Zone Objectives 6-4

Project Application 6-4

Case 1 — New Utility Facility Construction 6-4

Case 2 — Existing Utility Reconstruction 6-5

Case 3 — Utility Relocation Required by WSDOT Improvement Projects 6-5

Responsibilities 6-6

Guide for Completing The Utility Object Relocation Record 6-6

Request for Variance Utility Above-Ground Location I Objects 6-7

Request for Reclassification Utility Above-Ground Location II Objects 6-10

The 5\15 Rule 6-11

Appendix 6 A Plan for Implementation of the Control Zone Guidelines

Goal

To provide a roadway safe from above ground utility objects.

Terms

Control Zone

A calculated distance within the highway right of way in which utility object placement is controlled.

Mitigated Object

An above ground utility object within the control zone which is located in an inaccessible area, located behind a protective device or utilizes breakaway design.

The location and design of mitigation must be acceptable to and approved by WSDOT.

Location I Objects

Unmitigated objects within the control zone located in one of the following areas:

- Outside horizontal curves where advisory speed is 15 mph or more below the posted speed limit.
- Within the turn radius area of public grade I/S.
- Where a barrier, embankment, rock outcropping, ditch, or other roadside feature is likely to direct a vehicle into a utility object.
- Closer than 5 foot beyond the edge of useable shoulder.

Location II Objects

Unmitigated objects located within the control zone which do not meet Location I criteria.

Location III Objects

Objects located outside the control zone, mitigated objects located within the control zone, or Location II objects reclassified to Location III using the "Cost Effective Selection Procedure."

Alternative Measures

Measures used to protect, reduce or eliminate objects which are located within the control zone.

- Locating on private easement outside the highway right of way.
- Putting utility lines underground.
- Reducing the number of utility objects through joint use, increased span lengths and/or placing utility objects on only one side of the roadway.
- Increasing lateral offset distance.
- Mitigating individual objects by locating to an inaccessible area, installing protective devices or using breakaway design.

Control Zone Distance

See "Criteria" on page 8 of the Control Zone Guidelines. See also Appendix 7.

Cost Effective Selection Procedure

See "Attachment A" of the Control Zone Guidelines.

See also "Request for Reclassification" on page 20.

Engineering Analysis

See "Variance" on page 7 of the Control Zone Guidelines.

See also "Request for Variance" on page 18.

Control Zone Objectives

1. Locate all utility objects outside the control zone.
2. If compliance with Objective 1 is not possible, correct the object with the use of an alternative measure.
3. If compliance with Objective 1 and Objective 2 is not possible, individual Location I objects may be granted a variance from policy if justified by a utility provided engineering analysis.
4. If compliance with Objective 1 and Objective 2 is not possible, individual Location II objects may be reclassified to Location III objects if justified by a utility provided engineering analysis and application of the "Cost-Effective Selection Procedure."

Project Application

WSDOT addresses highway safety improvements in 3 basic categories. Sometimes projects are combined so it is possible that some project may include elements from one or more categories contained within them.

- Preservation projects where WSDOT addresses only Basic or Spot Safety improvements as defined by our design policies. These projects are typically paving projects.
- Improvement projects where WSDOT specifically addresses specific safety concerns beyond that which would be covered in a Preservation project . These projects may include new signals, turn lanes, roadway widening, etc.
- New construction projects where all Design and Safety elements are constructed to the highest possible standards. These projects may include new or reconstructed interchanges, new highways or additional lanes on existing highways.

Case 1 — New Utility Facility Construction

A. The Utility constructs a new line or extends an existing line within highway right of way.

B. New utility objects will comply with Objectives 1 or 2.

C. No consideration of Objectives 3 or 4 will be given until all alternative measures have been investigated and determined not feasible.

D. The Utility will submit to WSDOT the following data if applicable:
   - Franchise/Franchise amendment/Permit applications.
   - Mitigation requests including plans.
   - Variance requests with engineering analysis.

- Requests for reclassifications together with "Cost-Effective Selection procedure" data and engineering analysis. And a completed copy of the Utility Object Relocation Record listing new utility objects.

Case 2 — Existing Utility Reconstruction

A. The Utility replaces 50 percent or more of the existing poles or towers within any mile. Periodic pole or tower replacement is not included.

B. Utility objects will comply with Objectives 1 or 2.

C. No consideration of Objectives 3 or 4 will be given until all alternative measures have been investigated and determined not feasible.

D. The Utility will submit to WSDOT the following data if applicable:

- Franchise amendment/Permit applications.
- Mitigation requests including plans.
- Variance requests with engineering analysis.
- Requests for reclassifications together with "Cost-Effective Selection procedure" data and engineering analysis.

And a copy of the Utility Object Relocation Record.

Case 3 — Utility Relocation Required by WSDOT Improvement Projects

A. Conditions: WSDOT may address individual safety items.

1. WSDOT will conduct an accident analysis to determine spot safety improvement needs.
2. Any individual Location I or Location II objects which demonstrate a need for adjustment will be adjusted to comply with Objectives 1 or 2 in conjunction with the project.
3. No consideration of Objectives 3 or 4 will be given until all alternative measures have been investigated and determined not feasible.
4. At the time the project preliminary estimate is prepared, WSDOT will notify the Utility of the project and request the Utility to commit to a course of action. (See page 10.)
5. The Utility will submit to WSDOT the following data if applicable:
   - Franchise/Franchise amendment/Permit applications.
   - Mitigation requests including plans.
   - Variance requests with engineering analysis.
   - Requests for reclassifications together with "Cost-Effective Selection procedure" data and engineering analysis.

   And a copy of the Utility Object Relocation Record.

B. Conditions: WSDOT addresses safety items.

1. The Utility will adjust all Location I objects to comply with Objectives 1 or 2. Location II objects will be adjusted to the same extent as other safety work is completed on the project.
2. No consideration of Objectives 3 or 4 will be given until all alternative measures have been investigated and determined not feasible.

3. At the time the project preliminary estimate is approved, WSDOT will notify the Utility of the project scope and the Location I object and Location II object responsibility. (See pages 11 and 12.)
4. When the project Design Summary is completed, WSDOT will request the Utility to adjust all Location I objects and selected Location II objects. (See page 15.)
5. The Utility will submit to WSDOT the following data if applicable:
   - Franchise amendment/permit applications.
   - Mitigation requests including plans.
   - Variance requests with engineering analysis.
   - Requests for reclassifications together with "Cost-Effective Selection procedure" data and engineering analysis.

And a copy of the Utility Object Relocation Record.

Responsibilities

Systematic Mitigation	
Systematic Mitigation	Utility
Location I Variance/Mitigation Documentation	Utility and WSDOT (Region)
Location I Variance/Mitigation Approval	WSDOT (HQ)
Location II Reclass./Mitigation Documentation	Utility and WSDOT (Region)
Location II Reclass./Mitigation Approval	WSDOT (HQ)
Location II Reclass./Approval — The 5-15 Rule	WSDOT (Region)
Engineering Studies	Utility and WSDOT (Region)
Cost Effectiveness Selection Procedure	Utility and WSDOT (Region)
WSDOT Project Notification	WSDOT (Region)
WSDOT Project Control Zone Compliance Letters	WSDOT (Region)

Guide for Completing The Utility Object Relocation Record

A completed Utility Object Relocation Record Form must accompany any utility submittals to WSDOT for CASE 2 — Existing Utility Reconstruction projects, or CASE 3 — Utility Relocation required by DOT Projects. The following data is required:

Form Headings

Enter the identification information on the top left side of the form.

Enter the applicable project application CASE information on the top center of the form.

Existing Object

To identify the utility object, enter the Mile Post; the pole or object number; left or right of highway centerline; the type of object; and whether it is owned, jointly owned, or leased.

Roadway Data

Enter the data required to calculate the Control Zone distances and the right of way width from centerline. ADT's can be obtained from the District Utilities Office.

Field Measurements

Enter the slope and distance measurements required to calculate the Control Zone distances. (See the Control Zone Distance Calculation Instructions.)

Control Zone Calculations

- From the Control Zone Distance Calculation Instructions, enter the Condition number which was used to calculate the Control Zone distance.
- Enter the calculated Control Zone distance.
- Enter whether the object is a Location I or a Location II. Location III objects need not be entered on the form.

Planned Object Correction

This section is used by the utility to record it's decision on how the utility object will be corrected.

- For utility objects which will be relocated outside the Control Zone in compliance with Objective 1 of the implementation plan, mark the relocated distance in the Relocation. Dist. column.
- For utility objects which will be corrected with the use of an alternative measure in compliance with Objective 2 of the implementation plan, mark the Alt. Meas. column.

  If mitigation is the alternative measure chosen, justification for the use of mitigation and a plan showing proposed mitigation are required for WSDOT review and approval.
- For individual utility Location I objects which cannot be relocated outside the Control Zone or corrected with the use of an alternative measure and for which a variance will be requested, mark the LOC. I variance column. Only in extreme cases will a variance be considered.

  To be considered for a variance, the utility must submit to WSDOT a request for a variance together with the required justification. (See the Request for Variance instructions)
- For individual utility Location II objects which cannot be relocated outside the Control Zone or corrected with the use of an alternative measure and for which a reclassification will be requested, mark the LOC II Reclass. column.

  Only in cases where conditions, such as right of way width, terrain or other features make it impractical to comply with Objectives 1 or 2 will a reclassification be considered.

  To be considered for a reclassification, the utility must submit to WSDOT a request for reclassification together with the required justification (see the Request for Reclassification instructions).

Request for Variance Utility Above-Ground Location I Objects

Compliance with the WSDOT Control Zone Guidelines requires adjustment of Location I objects to meet the following:

Control Zone Objectives

1. Locate all utility objects outside the control zone.
2. If compliance with Objective 1 is not possible, correct the object with the use of an alternative measure.
3. If compliance with Objective 1 and 2 is not possible, individual Location I objects may be granted a variance from policy if justified by a utility provided engineering analysis.

The Utility will adjust Location I objects to comply with Objectives 1 or 2.

However, WSDOT recognizes that conditions may arise which make it impractical to comply with the maximum Control Zone. Examples of the conditions rendering compliance impractical include, for example:

- WSDOT right of way that is not adequate to accommodate utility objects outside the Control Zone, and
- Segments of utility facilities that, due to terrain or other features, do not warrant being located in full compliance with the maximum Control Zone.

  In these situations a variance, if adequately supported, may be granted by WSDOT to allow utility objects to remain or to be installed within the Control Zone. No consideration of a variance will be given until all alternative measures have been investigated and determined not feasible.

  To be considered for a variance, the Utility will submit to WSDOT a request for a variance together with justification presented in an Engineering Analysis. When an object is joint ownership, the request must be submitted jointly by the owners.

The Engineering Analysis must include, as a minimum, the following support data:

- Reasons that Location I objects should not be located outside the Control Zone.

  Evidence that installation in an alternate location outside the Control Zone or right of way is extremely difficult because of installation problems and/ or is unreasonable costly (show detailed cost comparison). Describe alternatives that were considered.

  Pictures and typical cross sections. Cross sections to include location of proposed and existing utility objects with reference to the edge of the traveled way.
- Reasons that Location I objects should not be corrected with the use of an alternative measure.

Locating on private easement outside the highway right of way.

Putting utility line underground.

Increasing the lateral offset of utility objects from the edge of the traveled way.

Mitigating Utility objects by:

- Locating to an inaccessible area, such as toward the top or on the top of cut slopes.
- Installing protective devices, such as berms, guardrails, traffic barriers or impact attenuators.
- Using a breakaway design.

UTILITY OBJECT RELOCATION RECORD
ABOVE GROUND OBJECTS

Utility Name:	
Date:	
SR	
County	
Franchise/Permit No.	

Application

Case 2 MP to MP Existing Utility Reconstruction
Case 3 Title DOT Project Utility Relocation
Case 4 MP to MP Utility AMT Construction

EXISTING OBJECT					ROADWAY DATA			FIELD MEASUREMENTS							CONT. ZONE CALCS.			PLANNED OBJECT CORRECTION				
								Cut Slopes		Fill Slopes		Distance from lane edge										
Location MP	Object Number	Lt. Rt.	Type	Owned Leased	Speed	ADT	R/W Width	Fore	Back	Side	Ground	Shldr.	Rdsd.	Object	Cond. No.	CZ Dist.	LOC I or II	Reloc. Dist.	Alt. Meas.	AMT	LOC I Variance	LOC II Reclass

Request for Reclassification Utility Above-Ground Location II Objects

Compliance with the WSDOT Control Zone Guidelines requires adjustment of Location II objects to meet the following:

Control Zone Objectives

1. Locate all utility objects outside the control zone.
2. If compliance with Objective 1 is not possible, correct the object with the use of an alternative measure.
3. If compliance with Objective 1 and 2 is not possible, individual Location II objects may be reclassified to Location III objects if justified by a utility provided engineering analysis and application of the "Cost-Effective Selection Procedure."

The Utility will adjust Location II objects to comply with Objectives 1 or 2.

However, WSDOT recognizes that conditions may arise which make it impractical to comply with the maximum Control Zone.

In these situations a reclassification, if adequately supported, may be granted by WSDOT to allow utility objects to remain or to be installed within the Control Zone. No consideration of a reclassification will be given until all alternative measures have been investigated and determined not feasible.

To be considered for a reclassification, the utility will submit to WSDOT Cost-Effective Selection Procedure data and justification presented in an Engineering Analysis. When an object is joint ownership, the request must be submitted jointly by the owners.

1. The Cost-Effective Selection Procedure data must include a completed Reclassification Request form together with a computer comparison of the existing utility object location and the relocated utility object location. ROADSIDE — Version 4.1 software will be used for the computer comparison.
2. The Engineering Analysis must include, as a minimum, the following support data.
   - Reasons that Location II objects should not be located outside the Control Zone.

     Evidence that installation in an alternate location outside the Control Zone or right of way is extremely difficult because of installation problems and/or is unreasonable costly (show detailed cost comparison) describe alternatives that were considered.

     Pictures and typical cross sections. Cross-sections to include location of proposed and existing utility objects with reference to the edge of the traveled way.
   - Reasons that Location II objects should not be corrected with the use of an alternative measure.

     Locating on private easement outside the highway right of way.

     Putting utility line underground.

     Reducing the number of utility objects through joint use, increase span lengths and/or placing utility objects on only one side of the road.

     Increasing the lateral offset of utility objects from the edge of the traveled way.

Mitigating utility objects by:

- Locating to an inaccessible area, such as toward the top or on the top of cut slopes.
- Installing protective devices, such as berms, guardrails, traffic barriers or impact attenuators.
- Using a breakaway design.

The 5\15 Rule

Requests for Reclassification of existing or relocated utility objects complying with all the following conditions may modify the Engineering Analysis and Cost- Effective Selection Procedure requirements of the reclassification process.

Conditions:

1. There are no feasible alternative measures for compliance with Control Zone Objective 2.
2. The utility object must be located 15’ or more from the edge of through lane.
3. The utility object must be located within 5’ of the highway right of way line.
4. A utility object, requested for reclassification in place, must not be located within an area of concentrated utility object accidents.
5. A utility object, requested for reclassification in place, must not have a recorded accident history.

In these situations it will be considered cost effective for Location II objects to remain within the highway right of way. The Engineering Analysis will consist of a Utility provided written statement of condition compliance.