Chapter 15 Preapproved Wall Appendix: Specific Requirements and Details for T-WALL® (The Neel Company)

In addition to the general design requirements provided in **Appendix 15-A**, the following specific requirements apply to the design of the T-WALL®:

No HITEC evaluation report is currently available for this wall system. The design procedures used for T-WALL® are based on the AASHTO Standard Specifications for Highway Bridges (**2002**). This wall system is considered to be a hybrid wall, having characteristics of both MSE walls and Modular walls. Interim approval is given for the continued use of the AASHTO Standard Specifications as the basis for design.

The design procedures provided in the AASHTO Standard Specifications, Articles 5.8 and 5.9, are most applicable to this wall system and shall in general be used for design of the T-WALL® system. For internal geotechnical stability, each panel level shall be internally stable against local pullout stresses with a minimum safety factor of 1.5 for static forces and 1.5 for the seismic loading case. Each panel level shall also be stable against overturning (minimum FS of 2.0 for static forces and 1.5 for seismic forces) and sliding (minimum FS of 1.5 for static forces and 1.1 for seismic forces) per the AASHTO Standard Specifications. Only 80 percent of the backfill weight shall be considered effective for resisting lateral earth pressure behind the wall for overturning stability as required in Article 5.9 of the AASHTO Standard Specifications for Highway Bridges (**2002**). For pullout analysis, a maximum friction factor of 0.5 shall be used for soil against concrete, and Tan ϕ for soil against soil. At rest lateral earth pressure (K_0) shall be used to calculate pullout resistance of the stems in the backfill soil, and active earth pressure (K_a) shall be considered to act on the back of the facing panel. Furthermore, this criterion is applicable to a center-to-center horizontal spacing of the stems of 5 ft or less. Larger center-to-center spacings of the stems may require that even less of the backfill weight be considered effective – the specific percentage of backfill weight that is considered effective in the case of a stem spacing greater than 5 ft shall be approved by the State Geotechnical Engineer.

The preapproved height for this wall system (25 ft) is less than the standard preapproved height of 33 ft for proprietary wall systems. Use of this wall system for heights greater than 25 ft requires approval by the State Bridge Design Engineer and the State Geotechnical Engineer. Furthermore, the first two T-WALLs constructed on WSDOT projects greater than 20 ft in height shall be instrumented to specifically assess the stability of the wall and the percentage of backfill that is effective in resisting overturning and sliding instability.

Approved details for the T-WALL® system are provided in the following plan sheets. Exceptions and additional requirements regarding these approved details are as follows:

- In the plan sheet that shows the typical guard rail arrangement, the minimum spacing between the back of the wall and the edge of the guardrail post shall be a minimum of 2 ft, and the select backfill requirements shown shall meet the WSDOT Standard Specifications for Gravel Borrow, or other backfill shown in the contract documents, rather than the specifications shown on the plan sheet.
- Where filter cloth is shown, WSDOT reserves the right to require the use WSDOT Standard Specification materials as specified in Standard Specification Section 9-33 that are similar to those specified in the plan sheets.

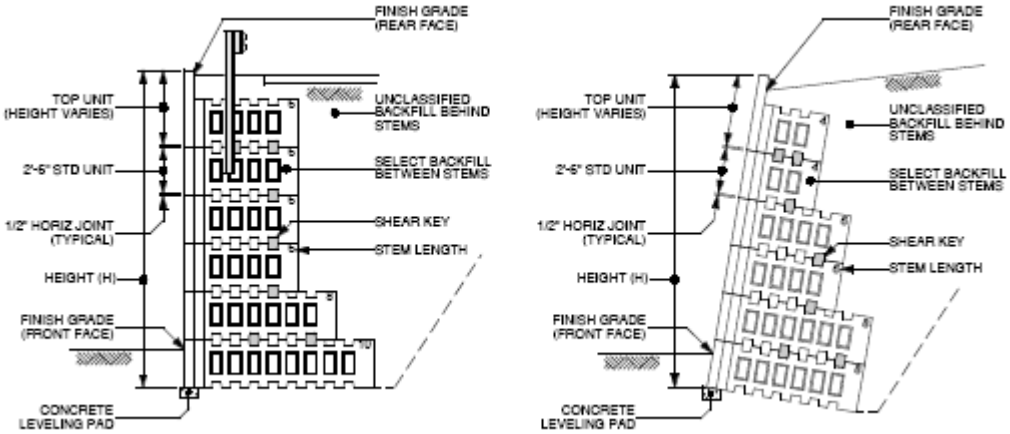

Typical Cross Sections and Definitions

STANDARD UNIT DIMENSIONS

T-WALL® UNIT WEIGHTS

STEM LENGTH (ft)	SINGLE UNIT WEIGHT(#)	DOUBLE UNIT WEIGHT(#)
4	1600	3200
6	1850	3700
8	2100	4200
10	2350	4700
12	2600	5200
14	2900	5800
16	3150	6300
18	3400	6800
20	3650	7300

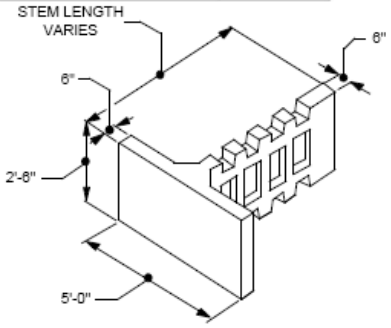

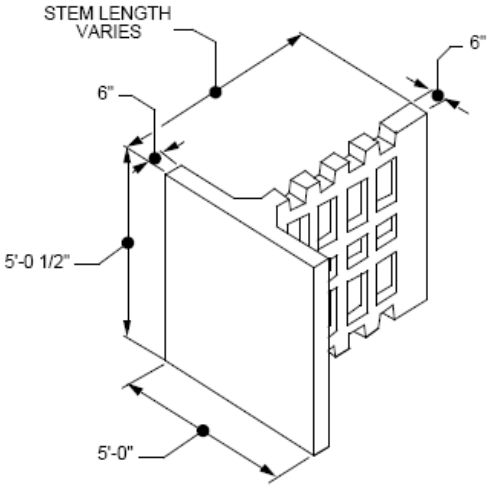

- The size of the T-WALL unit refers to the stem length.
- The unit reinforcing steel meets AASHTO and ACI codes.

DETAILS

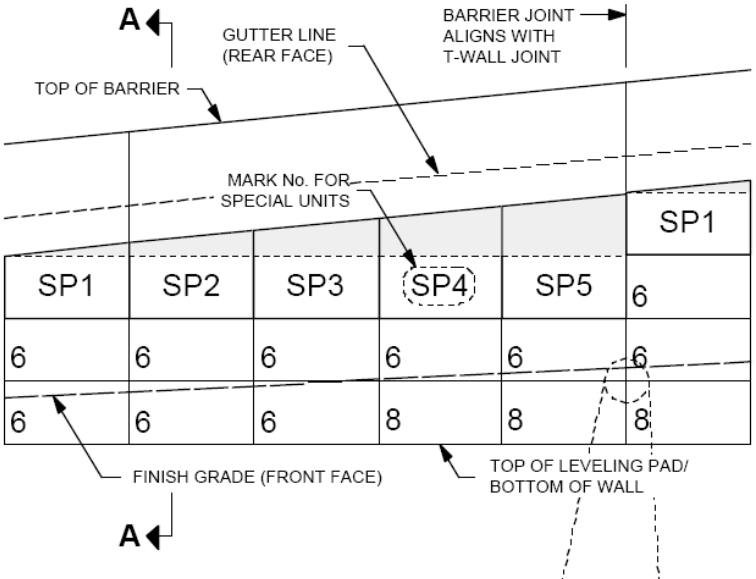

PART ELEVATION - WALL WITH TRAFFIC BARRIER

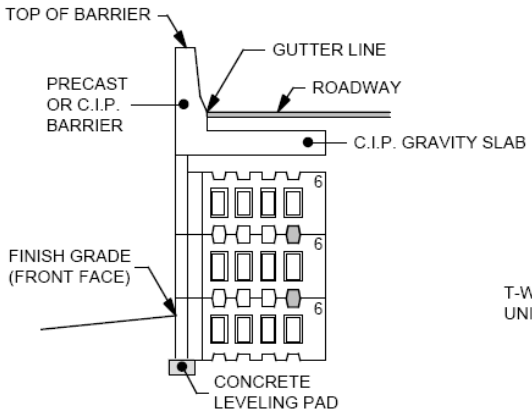

SECTION A-A

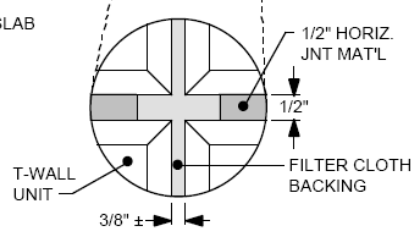

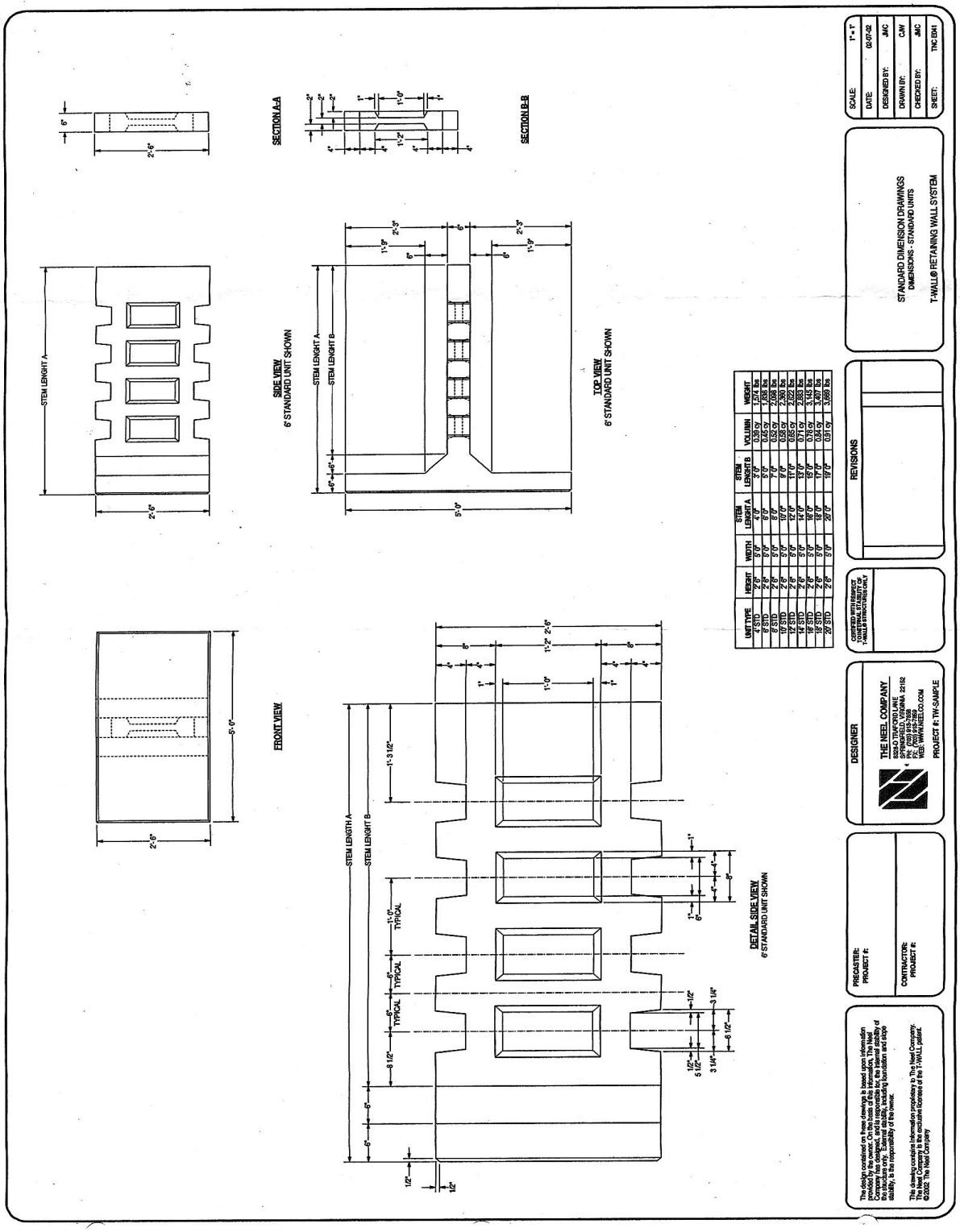
FRONT VIEW
SIDE VIEW
6' STANDARD UNIT SHOWN
TOP VIEW
6' STANDARD UNIT SHOWN
SECTION A-A
SECTION B-B
DETAIL SIDE VIEW
6' STANDARD UNIT SHOWN
STEM LENGHT A
STEM LENGHT B
TYPICAL
UNIT TYPE | HEIGHT | WIDTH | STEM LENGHT A | STEM LENGHT B | VOLUMN | WEIGHT
4' STD | 2'-6" | 5'-0" | 4'-0" | 3'-0" | 0.38 cy | 1,274 lbs
6' STD | 2'-6" | 5'-0" | 6'-0" | 5'-0" | 0.45 cy | 1,658 lbs
8' STD | 2'-6" | 5'-0" | 8'-0" | 7'-0" | 0.55 cy | 2,036 lbs
10' STD | 2'-6" | 5'-0" | 10'-0" | 9'-0" | 0.65 cy | 2,390 lbs
12' STD | 2'-6" | 5'-0" | 12'-0" | 11'-0" | 0.85 cy | 2,622 lbs
14' STD | 2'-6" | 5'-0" | 14'-0" | 13'-0" | 0.71 cy | 2,883 lbs
16' STD | 2'-6" | 5'-0" | 16'-0" | 15'-0" | 0.76 cy | 3,145 lbs
18' STD | 2'-6" | 5'-0" | 18'-0" | 17'-0" | 0.80 cy | 3,407 lbs
20' STD | 2'-6" | 5'-0" | 20'-0" | 19'-0" | 0.91 cy | 3,669 lbs
SCALE: 1" = 1'
DATE: 02-07-02
DESIGNED BY: JMC
DRAWN BY: CJW
CHECKED BY: JMC
SHEET: THC EM1
STANDARD DIMENSION DRAWINGS
DIMENSIONS - STANDARD UNITS
T-WALL® RETAINING WALL SYSTEM
REVISIONS
CERTIFIED WITH REGARD TO INTERNAL STABILITY OF T-WALLS STRUCTURES ONLY
DESIGNER
THE NEEL COMPANY
8282-D TRAFFORD LANE
SPRINGFIELD, VIRGINIA 22152
PH: (703) 913-9388
FX: (703) 913-7769
WEB: WWW.NEEL-CO.COM
PROJECT #: TW-SAMPLE
PRECASTER:
PROJECT #:
CONTRACTOR:
PROJECT #:
This design contained on these drawings is based upon information provided by the owner. On the basis of this information, The Neel Company has designed, and is responsible for, the internal stability of the structure. The adequacy of the supporting foundation, and slope stability, is the responsibility of the owner.
This drawing contains information proprietary to The Neel Company. The Neel Company is the exclusive licensee of the T-WALL patent.
©2002 The Neel Company

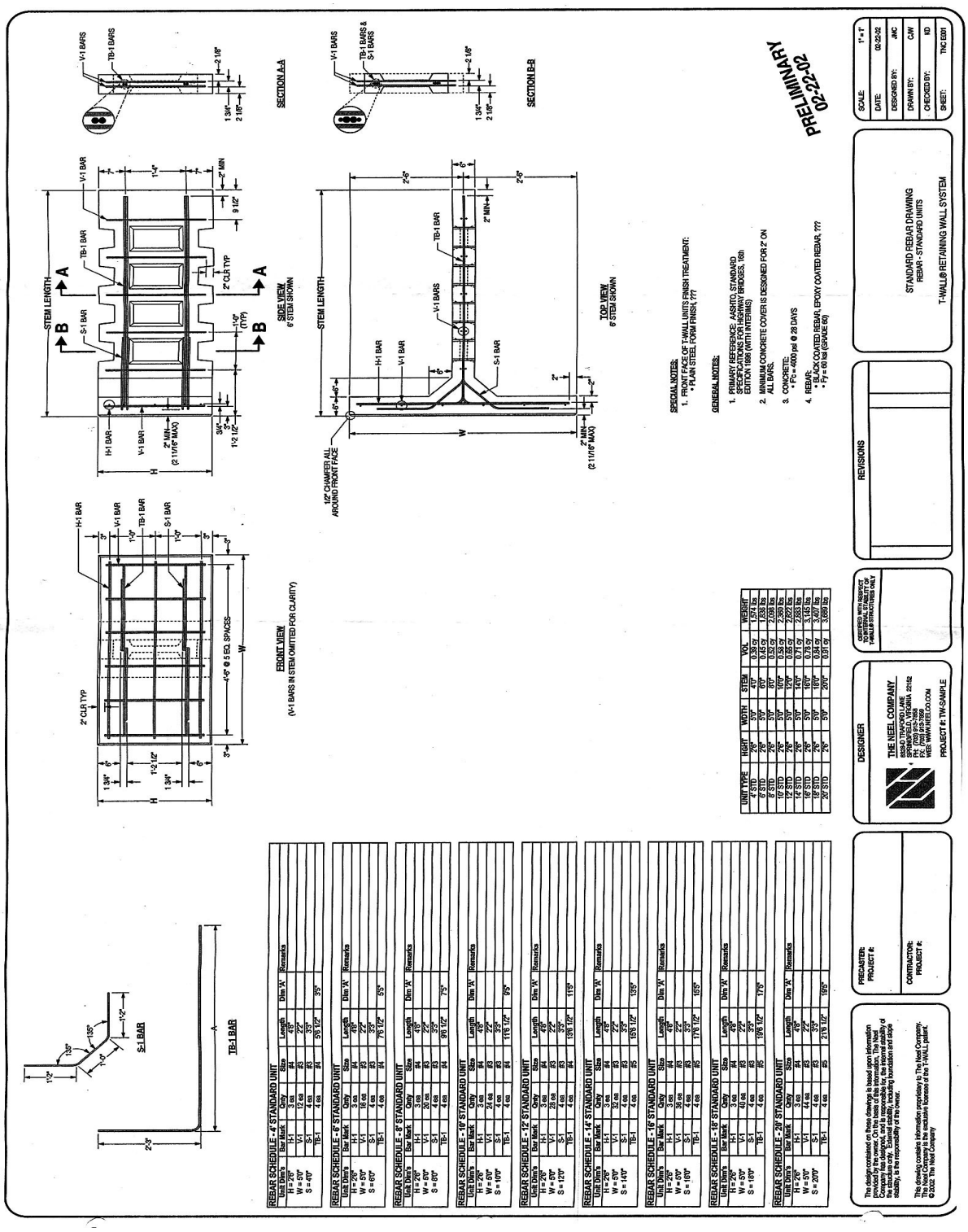
SECTION A-A
SECTION B-B
SIDE VIEW
6" STEM SHOWN
TOP VIEW
6" STEM SHOWN
FRONT VIEW
(V-1 BARS IN STEM OMITTED FOR CLARITY)
STEM LENGTH
V-1 BARS
TB-1 BARS
TB-1 BARS & S-1 BARS
H-1 BAR
V-1 BAR
TB-1 BAR
S-1 BAR
2" CLR TYP
1/2" CHAMFER ALL AROUND FRONT FACE
4"-0" @ 5 EQ. SPACES
S-1 BAR
TB-1 BAR
PRELIMINARY
02-22-02
SPECIAL NOTES:
1. FRONT FACE OF T-WALL UNITS FINISH TREATMENT:
• PLAIN STEEL FORM FINISH, ???
GENERAL NOTES:
1. PRIMARY REFERENCE: AASHTO, STANDARD SPECIFICATIONS FOR HIGHWAY BRIDGES, 16th EDITION (1996) (WITH INTERIMS)
2. MINIMUM CONCRETE COVER IS DESIGNED FOR 2" ON ALL BARS.
3. CONCRETE:
• F'c = 4000 psi @ 28 DAYS
4. REBAR:
• ASTM A 775 EPOXY COATED REBAR, EPOXY COATED REBAR, ???
• Fy = 60 ksi (GRADE 60)
REVISIONS
STANDARD REBAR DRAWING
REBAR - STANDARD UNITS
T-WALL® RETAINING WALL SYSTEM
SCALE: 1" = 1'
DATE: 02-22-02
DESIGNED BY: JMC
DRAWN BY: CJW
CHECKED BY: KD
SHEET: TNC 6501
DESIGNER
THE NEEL COMPANY
8550-D TRAFFORD LANE
CLARKSVILLE, MARYLAND 21152
PH: (703) 913-7888
FX: (703) 913-7889
E-MAIL: TNC@NEELCO.COM
PROJECT #: TN-SAMPLE
CERTIFIED WITH RESPECT TO INTERNAL STABILITY OF T-WALL® RETAINING WALL
PRECASTER:
PROJECT #:
CONTRACTOR:
PROJECT #:
The design contained on these drawings is based upon information furnished by the owner, or its agents, and is believed to be accurate. The Neel Company, Inc. assumes no responsibility for the accuracy of the structure only. External stability, including foundation and slope stability, is the responsibility of the owner.
This drawing contains information proprietary to The Neel Company. The Neel Company is the exclusive licensee of the T-WALL patent.
© 2002 The Neel Company
REBAR SCHEDULE - 4' STANDARD UNIT
Unit Dim's | Bar Mark | Qnty | Size | Length | Dim 'A' | Remarks
H = 26" | H-1 | 3 ea | #4 | 4'-8" | | |
W = 50" | V-1 | 12 ea | #3 | 2'-2" | | |
S = 40" | S-1 | 4 ea | #3 | 3'-3" | | |
| TB-1 | 4 ea | #4 | 5'-6 1/2" | 3'-5" | |
REBAR SCHEDULE - 6' STANDARD UNIT
Unit Dim's | Bar Mark | Qnty | Size | Length | Dim 'A' | Remarks
H = 26" | H-1 | 3 ea | #4 | 4'-8" | | |
W = 50" | V-1 | 16 ea | #3 | 2'-2" | | |
S = 60" | S-1 | 4 ea | #3 | 3'-3" | | |
| TB-1 | 4 ea | #4 | 7'-6 1/2" | 5'-5" | |
REBAR SCHEDULE - 8' STANDARD UNIT
Unit Dim's | Bar Mark | Qnty | Size | Length | Dim 'A' | Remarks
H = 26" | H-1 | 3 ea | #4 | 4'-8" | | |
W = 50" | V-1 | 20 ea | #3 | 2'-2" | | |
S = 80" | S-1 | 4 ea | #3 | 3'-3" | | |
| TB-1 | 4 ea | #4 | 9'-6 1/2" | 7'-5" | |
REBAR SCHEDULE - 10' STANDARD UNIT
Unit Dim's | Bar Mark | Qnty | Size | Length | Dim 'A' | Remarks
H = 26" | H-1 | 3 ea | #4 | 4'-8" | | |
W = 50" | V-1 | 24 ea | #3 | 2'-2" | | |
S = 100" | S-1 | 4 ea | #3 | 3'-3" | | |
| TB-1 | 4 ea | #4 | 11'-6 1/2" | 9'-5" | |
REBAR SCHEDULE - 12' STANDARD UNIT
Unit Dim's | Bar Mark | Qnty | Size | Length | Dim 'A' | Remarks
H = 26" | H-1 | 3 ea | #4 | 4'-8" | | |
W = 50" | V-1 | 28 ea | #3 | 2'-2" | | |
S = 120" | S-1 | 4 ea | #3 | 3'-3" | | |
| TB-1 | 4 ea | #4 | 13'-6 1/2" | 11'-5" | |
REBAR SCHEDULE - 14' STANDARD UNIT
Unit Dim's | Bar Mark | Qnty | Size | Length | Dim 'A' | Remarks
H = 26" | H-1 | 3 ea | #4 | 4'-8" | | |
W = 50" | V-1 | 32 ea | #3 | 2'-2" | | |
S = 140" | S-1 | 4 ea | #3 | 3'-3" | | |
| TB-1 | 4 ea | #5 | 15'-6 1/2" | 13'-5" | |
REBAR SCHEDULE - 16' STANDARD UNIT
Unit Dim's | Bar Mark | Qnty | Size | Length | Dim 'A' | Remarks
H = 26" | H-1 | 3 ea | #4 | 4'-8" | | |
W = 50" | V-1 | 36 ea | #3 | 2'-2" | | |
S = 160" | S-1 | 4 ea | #3 | 3'-3" | | |
| TB-1 | 4 ea | #5 | 17'-6 1/2" | 15'-5" | |
REBAR SCHEDULE - 18' STANDARD UNIT
Unit Dim's | Bar Mark | Qnty | Size | Length | Dim 'A' | Remarks
H = 26" | H-1 | 3 ea | #4 | 4'-8" | | |
W = 50" | V-1 | 40 ea | #3 | 2'-2" | | |
S = 180" | S-1 | 4 ea | #3 | 3'-3" | | |
| TB-1 | 4 ea | #5 | 19'-6 1/2" | 17'-5" | |
REBAR SCHEDULE - 20' STANDARD UNIT
Unit Dim's | Bar Mark | Qnty | Size | Length | Dim 'A' | Remarks
H = 26" | H-1 | 3 ea | #4 | 4'-8" | | |
W = 50" | V-1 | 44 ea | #3 | 2'-2" | | |
S = 200" | S-1 | 4 ea | #3 | 3'-3" | | |
| TB-1 | 4 ea | #5 | 21'-6 1/2" | 19'-5" | |
UNIT TYPE | HIGHT | WIDTH | STEM | VOL | WEIGHT
4' STD | 26" | 50" | 4'0" | 0.39 cy | 1,574 lbs
6' STD | 26" | 50" | 6'0" | 0.45 cy | 1,808 lbs
8' STD | 26" | 50" | 8'0" | 0.52 cy | 2,088 lbs
10' STD | 26" | 50" | 10'0" | 0.58 cy | 2,360 lbs
12' STD | 26" | 50" | 12'0" | 0.65 cy | 2,622 lbs
14' STD | 26" | 50" | 14'0" | 0.71 cy | 2,883 lbs
16' STD | 26" | 50" | 16'0" | 0.78 cy | 3,145 lbs
18' STD | 26" | 50" | 18'0" | 0.84 cy | 3,407 lbs
20' STD | 26" | 50" | 20'0" | 0.91 cy | 3,669 lbs
S-1 BAR
TB-1 BAR

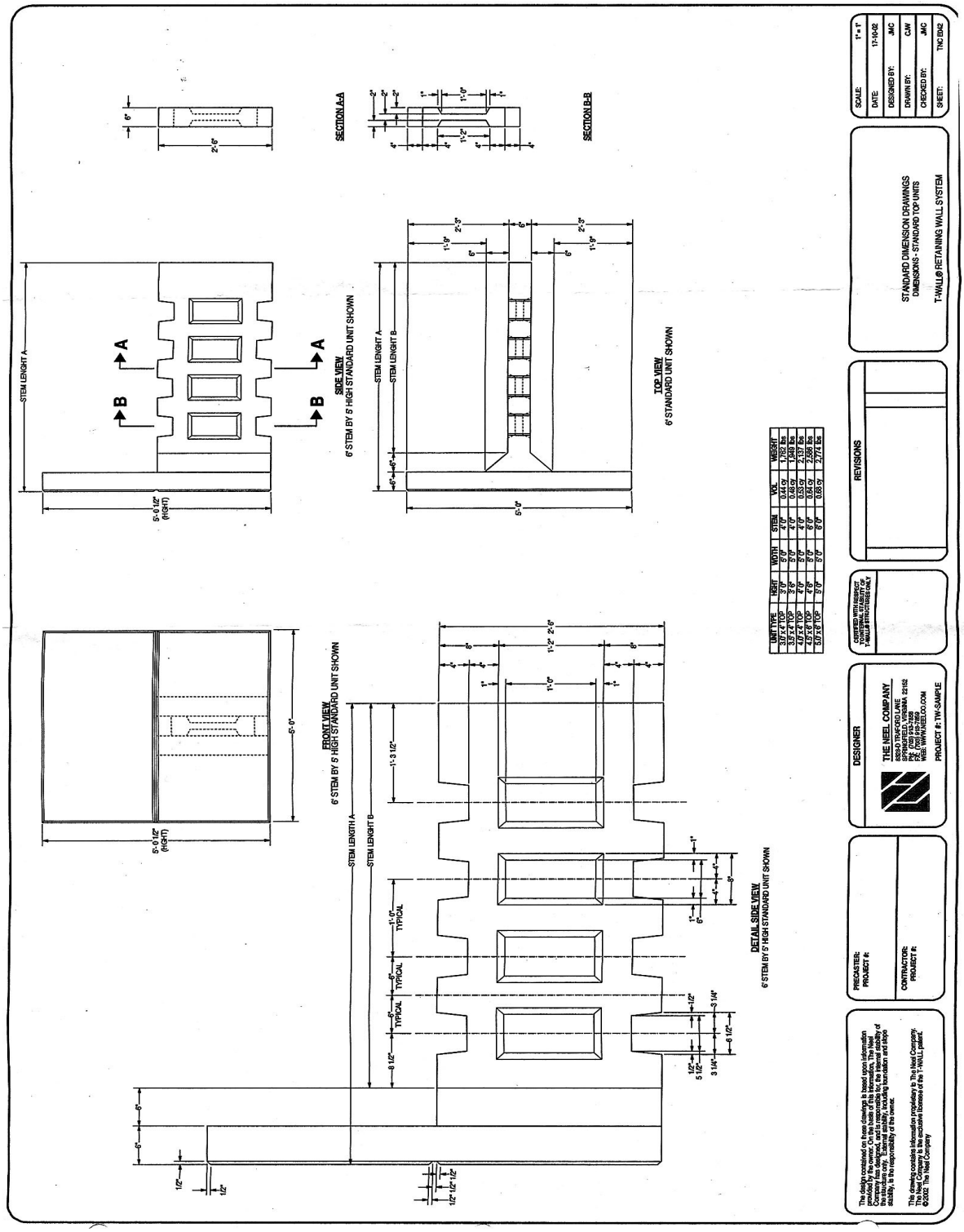
SECTION A-A
SECTION B-B
SIDE VIEW
6' STEM BY 5' HIGH STANDARD UNIT SHOWN
TOP VIEW
6' STANDARD UNIT SHOWN
FRONT VIEW
6' STEM BY 5' HIGH STANDARD UNIT SHOWN
DETAIL SIDE VIEW
6' STEM BY 5' HIGH STANDARD UNIT SHOWN
STEM LENGHT A
STEM LENGHT B
5'-0 1/2" (HGHT)
UNIT TYPE | HGHT | WIDTH | STEM | VOL | WEIGHT
3.0' x 4' TOP | 3'0" | 5'0" | 4'0" | 0.44 cy | 1,762 lbs
3.5' x 4' TOP | 3'6" | 5'0" | 4'0" | 0.48 cy | 1,949 lbs
4.0' x 4' TOP | 4'0" | 5'0" | 4'0" | 0.53 cy | 2,137 lbs
4.5' x 6' TOP | 4'6" | 5'0" | 6'0" | 0.64 cy | 2,586 lbs
5.0' x 6' TOP | 5'0" | 5'0" | 6'0" | 0.68 cy | 2,774 lbs
REVISIONS
STANDARD DIMENSION DRAWINGS
DIMENSIONS - STANDARD TOP UNITS
T-WALL® RETAINING WALL SYSTEM
SCALE: 1" = 1'
DATE: 17-10-02
DESIGNED BY: JMC
DRAWN BY: CJW
CHECKED BY: JMC
SHEET: TNC EM2
DESIGNER
THE NEEL COMPANY
8350 TRAFORD LANE
SPRINGFIELD, VIRGINIA 22152
PH: (703) 913-7858
FX: (703) 913-7859
WEB: WWW.NEELCO.COM
PROJECT #: TW-SAMPLE
PRECASTER:
PROJECT #:
CONTRACTOR:
PROJECT #:
This design contained on these drawings is based upon information provided by the owner. On the basis of this information, The Neel Company has designed, and is responsible for, the internal stability of the structure only. External stability, including foundation and slope stability, is the responsibility of the owner.
This drawing contains information proprietary to The Neel Company. The Neel Company is the exclusive licensee of the T-WALL patent.
©2002 The Neel Company

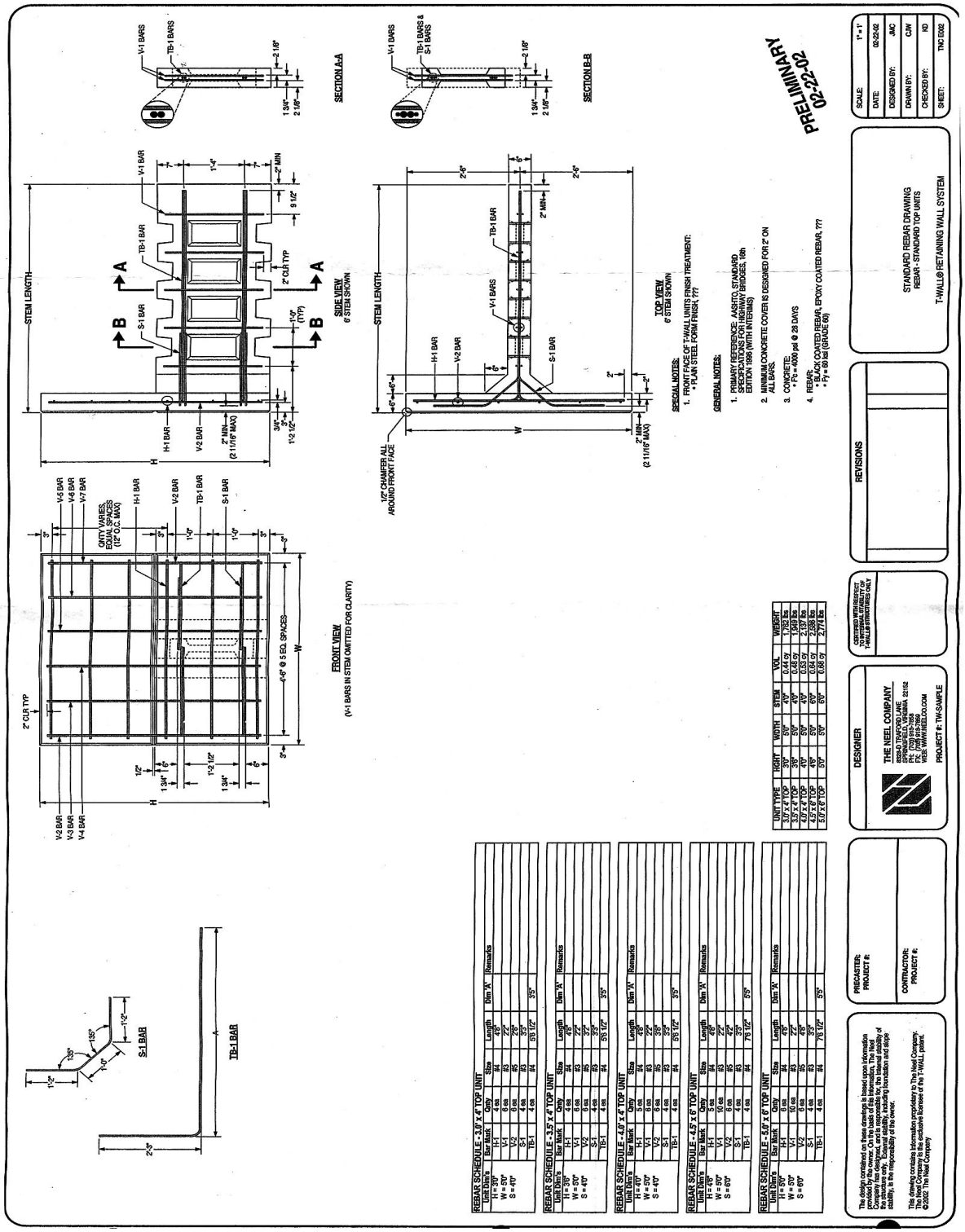
SECTION A-A
SECTION B-B
SIDE VIEW
6" STEM SHOWN
FRONT VIEW
(V-1 BARS IN STEM OMITTED FOR CLARITY)
TOP VIEW
6" STEM SHOWN
PRELIMINARY
02-22-02
SPECIAL NOTES:
1. FRONT FACE OF T-WALL UNITS FINISH TREATMENT:
• PLAIN STEEL FORM FINISH, ???
GENERAL NOTES:
1. PRIMARY REFERENCE: AASHTO, STANDARD SPECIFICATIONS FOR HIGHWAY BRIDGES, 16th EDITION, 1996 (WITH INTERIMS)
2. MINIMUM CONCRETE COVER IS DESIGNED FOR 2" ON ALL BARS.
3. CONCRETE:
• Fc = 4000 psi @ 28 DAYS
4. REBAR:
• BLACK COATED REBAR, EPOXY COATED REBAR, ???
• Fy = 60 ksi (GRADE 60)
REBAR SCHEDULE - 3.0' x 4' TOP UNIT
REBAR SCHEDULE - 3.5' x 4' TOP UNIT
REBAR SCHEDULE - 4.0' x 4' TOP UNIT
REBAR SCHEDULE - 4.5' x 6' TOP UNIT
REBAR SCHEDULE - 5.0' x 6' TOP UNIT
S-1 BAR
TB-1 BAR
DESIGNER
THE NEEL COMPANY
PRECASTER:
PROJECT #:
CONTRACTOR:
PROJECT #:
REVISIONS
STANDARD REBAR DRAWING
REBAR - STANDARD TOP UNITS
T-WALL® RETAINING WALL SYSTEM
SCALE: 1" = 1'
DATE: 02-22-02
DESIGNED BY: JMC
DRAWN BY: CJW
CHECKED BY: RD
SHEET: TNC 0202
PROJECT #: TW-SAMPLE

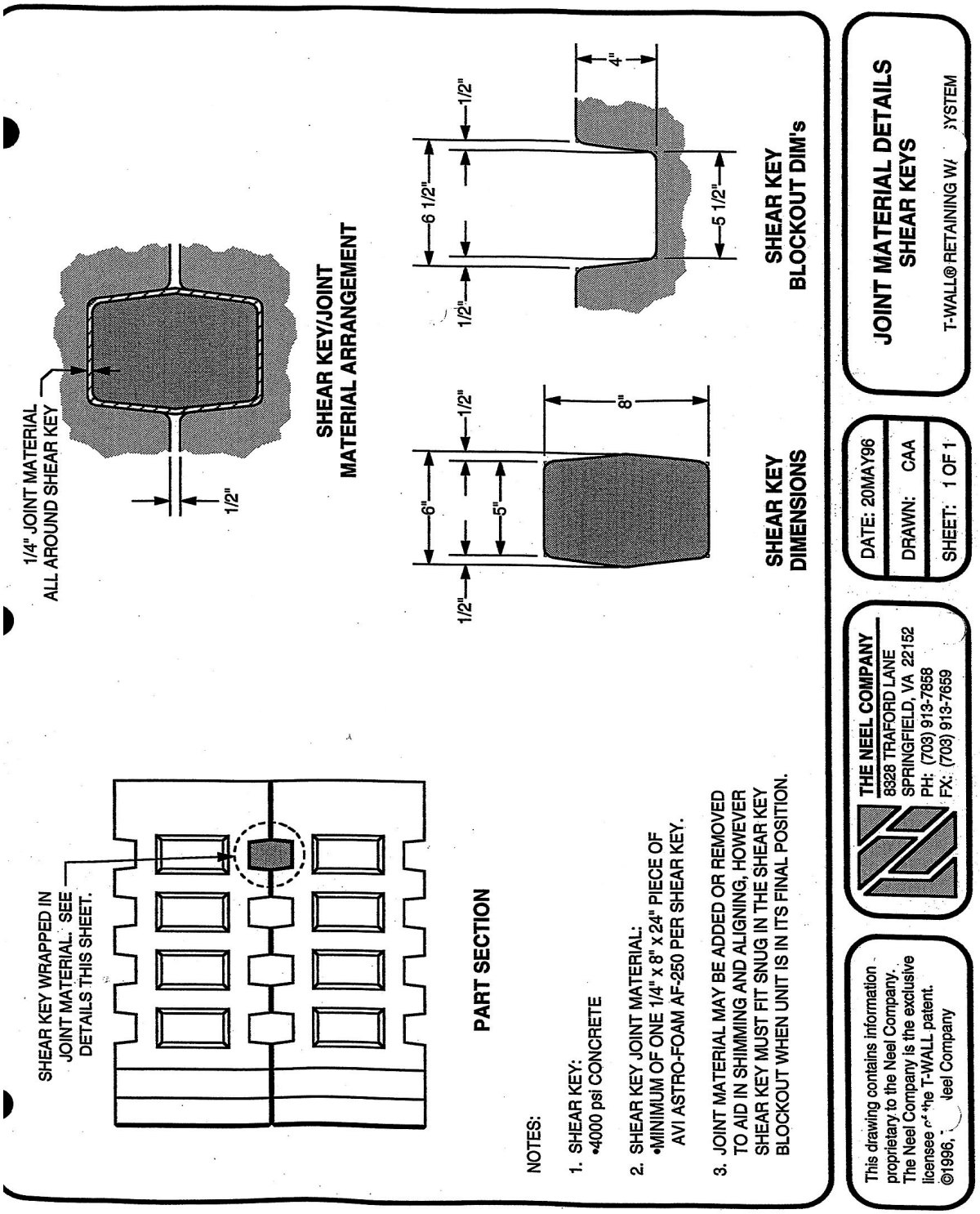
1/4" JOINT MATERIAL
ALL AROUND SHEAR KEY
1/2"
SHEAR KEY/JOINT
MATERIAL ARRANGEMENT
6 1/2"
1/2"
1/2"
1/2"
4"
5 1/2"
SHEAR KEY
BLOCKOUT DIM's
6"
5"
1/2"
1/2"
8"
SHEAR KEY
DIMENSIONS
SHEAR KEY WRAPPED IN
JOINT MATERIAL. SEE
DETAILS THIS SHEET.
PART SECTION
NOTES:
1. SHEAR KEY:
•4000 psi CONCRETE
2. SHEAR KEY JOINT MATERIAL:
•MINIMUM OF ONE 1/4" x 8" x 24" PIECE OF
AVI ASTRO-FOAM AF-250 PER SHEAR KEY.
3. JOINT MATERIAL MAY BE ADDED OR REMOVED
TO AID IN SHIMMING AND ALIGNING, HOWEVER
SHEAR KEY MUST FIT SNUG IN THE SHEAR KEY
BLOCKOUT WHEN UNIT IS IN ITS FINAL POSITION.
This drawing contains information
proprietary to the Neel Company.
The Neel Company is the exclusive
licensee of the T-WALL patent.
©1996, The Neel Company
THE NEEL COMPANY
8328 TRAFORD LANE
SPRINGFIELD, VA 22152
PH: (703) 913-7858
FX: (703) 913-7659
DATE: 20MAY96
DRAWN: CAA
SHEET: 1 OF 1
JOINT MATERIAL DETAILS
SHEAR KEYS
T-WALL® RETAINING WALL SYSTEM

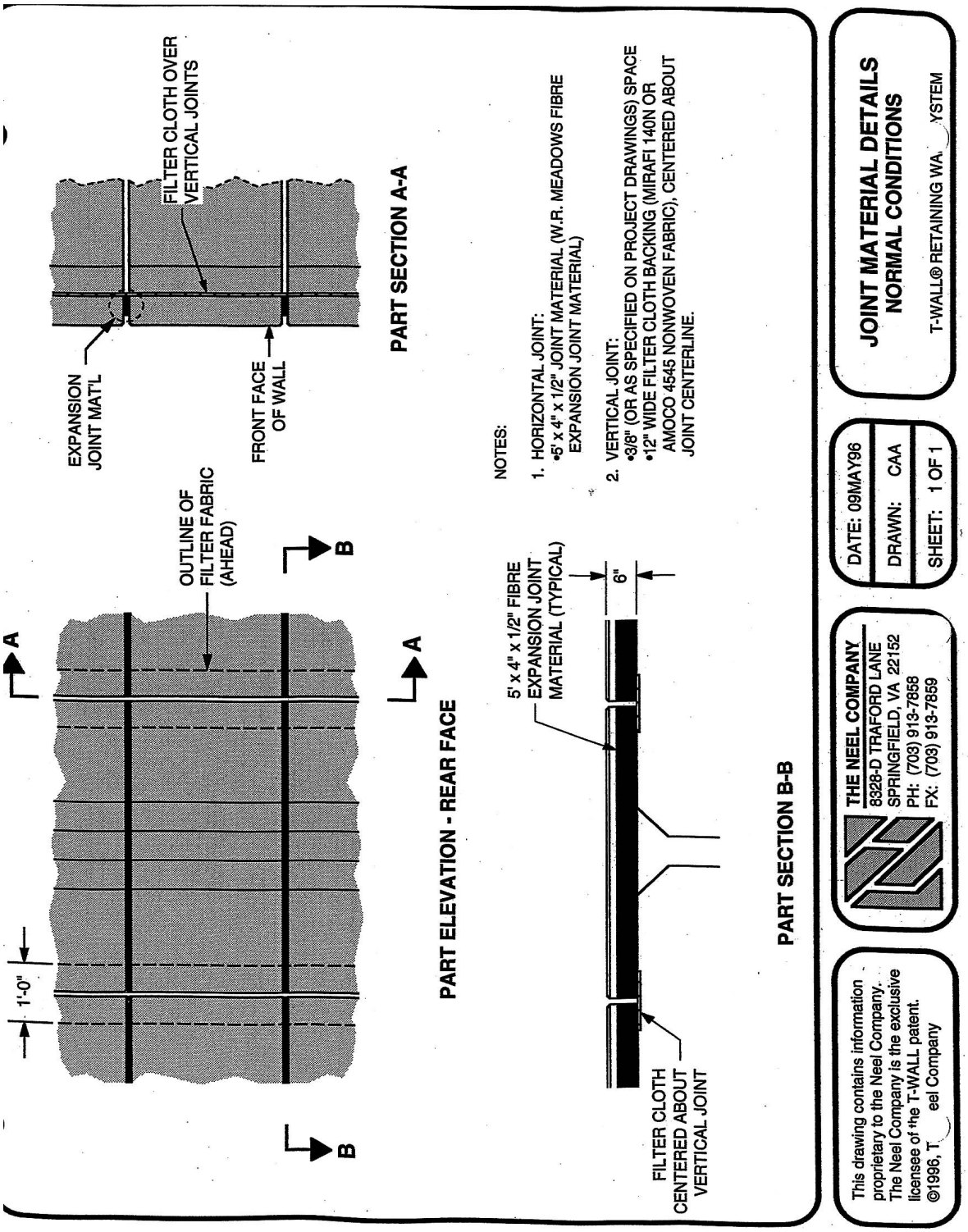
FILTER CLOTH OVER VERTICAL JOINTS
EXPANSION JOINT MAT'L
FRONT FACE OF WALL
PART SECTION A-A
OUTLINE OF FILTER FABRIC (AHEAD)
A
B
1'-0"
PART ELEVATION - REAR FACE
NOTES:
1. HORIZONTAL JOINT:
•5' x 4" x 1/2" JOINT MATERIAL (W.R. MEADOWS FIBRE EXPANSION JOINT MATERIAL)
2. VERTICAL JOINT:
•3/8" (OR AS SPECIFIED ON PROJECT DRAWINGS) SPACE
•12" WIDE FILTER CLOTH BACKING (MIRAFI 140N OR AMOCO 4545 NONWOVEN FABRIC), CENTERED ABOUT JOINT CENTERLINE.
5' x 4" x 1/2" FIBRE EXPANSION JOINT MATERIAL (TYPICAL)
6"
FILTER CLOTH CENTERED ABOUT VERTICAL JOINT
PART SECTION B-B
JOINT MATERIAL DETAILS
NORMAL CONDITIONS
T-WALL® RETAINING WA YSTEM
DATE: 09MAY96
DRAWN: CAA
SHEET: 1 OF 1
THE NEEL COMPANY
8328-D TRAFORD LANE
SPRINGFIELD, VA 22152
PH: (703) 913-7858
FX: (703) 913-7859
This drawing contains information proprietary to the Neel Company. The Neel Company is the exclusive licensee of the T-WALL patent. ©1996, T eel Company

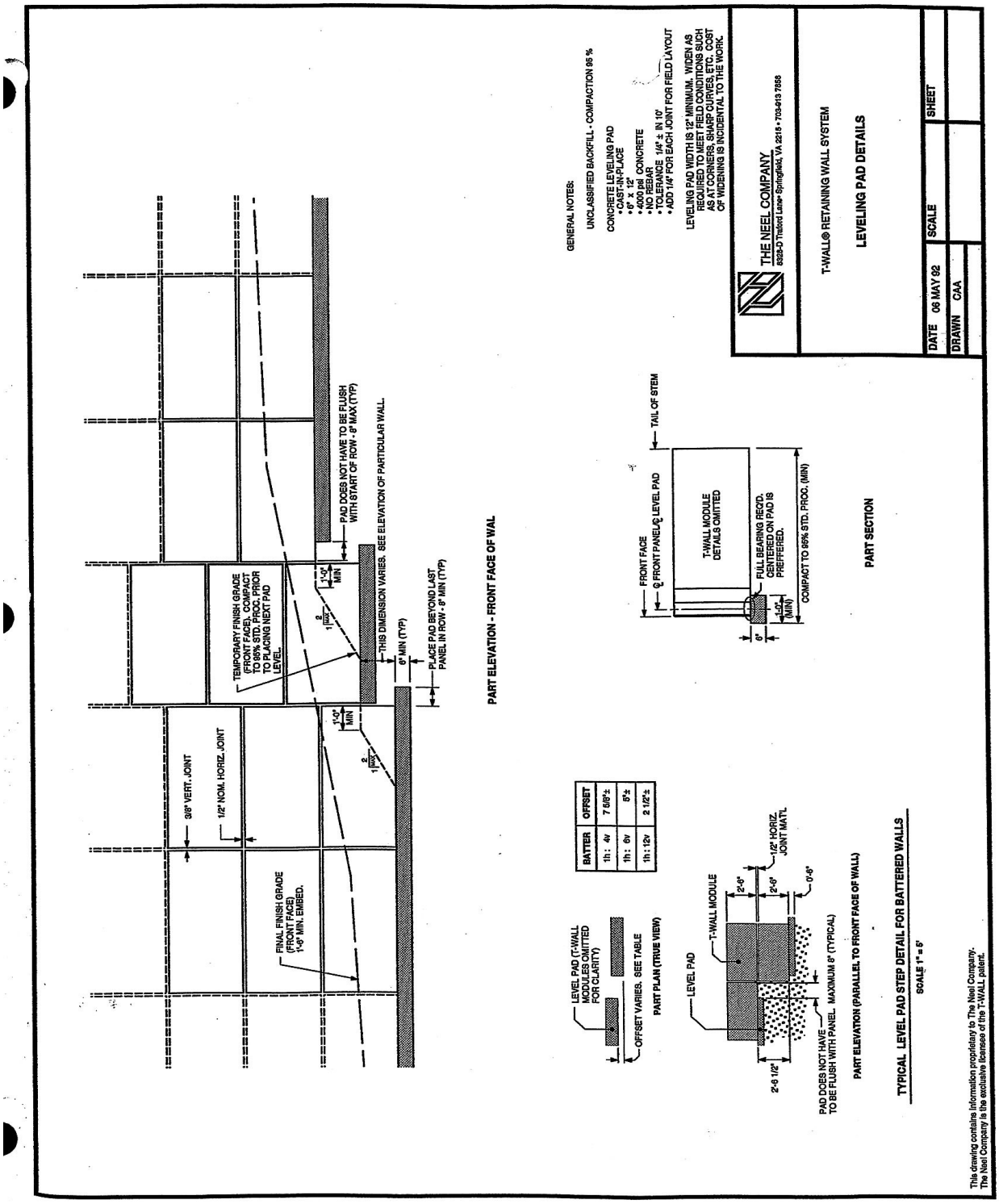
GENERAL NOTES:
UNCLASSIFIED BACKFILL - COMPACTION 95 %
CONCRETE LEVELING PAD
• CAST-IN-PLACE
• 6" x 12"
• 4000 psi CONCRETE
• NO REBAR
• TOLERANCE 1/4" ± IN 10'
• ADD 1/4" FOR EACH JOINT FOR FIELD LAYOUT
LEVELING PAD WIDTH IS 12" MINIMUM. WIDEN AS REQUIRED TO MEET FIELD CONDITIONS SUCH AS AT CORNERS, SHARP CURVES, ETC. COST OF WIDENING IS INCIDENTAL TO THE WORK.
THE NEEL COMPANY
8328-D Traford Lane• Springfield, VA 2215 • 703-913 7858
T-WALL® RETAINING WALL SYSTEM
LEVELING PAD DETAILS
DATE 06 MAY 92
SCALE
SHEET
DRAWN CAA
PAD DOES NOT HAVE TO BE FLUSH WITH START OF ROW - 8" MAX (TYP)
TEMPORARY FINISH GRADE (FRONT FACE). COMPACT TO 95% STD. PROC. PRIOR TO PLACING NEXT PAD LEVEL.
THIS DIMENSION VARIES. SEE ELEVATION OF PARTICULAR WALL.
6" MIN (TYP)
PLACE PAD BEYOND LAST PANEL IN ROW - 8" MIN (TYP)
3/8" VERT. JOINT
1/2" NOM. HORIZ. JOINT
FINAL FINISH GRADE (FRONT FACE) 1'-6" MIN. EMBED.
PART ELEVATION - FRONT FACE OF WAL
FRONT FACE
℄ FRONT PANEL/℄ LEVEL PAD
TAIL OF STEM
T-WALL MODULE DETAILS OMITTED
FULL BEARING REQ'D. CENTERED ON PAD IS PREFFERED.
COMPACT TO 95% STD. PROC. (MIN)
PART SECTION
BATTER
OFFSET
1h : 4v
7 5/8"±
1h : 6v
5"±
1h : 12v
2 1/2"±
LEVEL PAD (T-WALL MODULES OMITTED FOR CLARITY)
OFFSET VARIES. SEE TABLE
PART PLAN (TRUE VIEW)
LEVEL PAD
T-WALL MODULE
1/2" HORIZ. JOINT MAT'L
PAD DOES NOT HAVE TO BE FLUSH WITH PANEL. MAXIMUM 8" (TYPICAL)
PART ELEVATION (PARALLEL TO FRONT FACE OF WALL)
TYPICAL LEVEL PAD STEP DETAIL FOR BATTERED WALLS
SCALE 1" = 5'
This drawing contains information proprietary to The Neel Company.
The Neel Company is the exclusive licensee of the T-WALL patent.

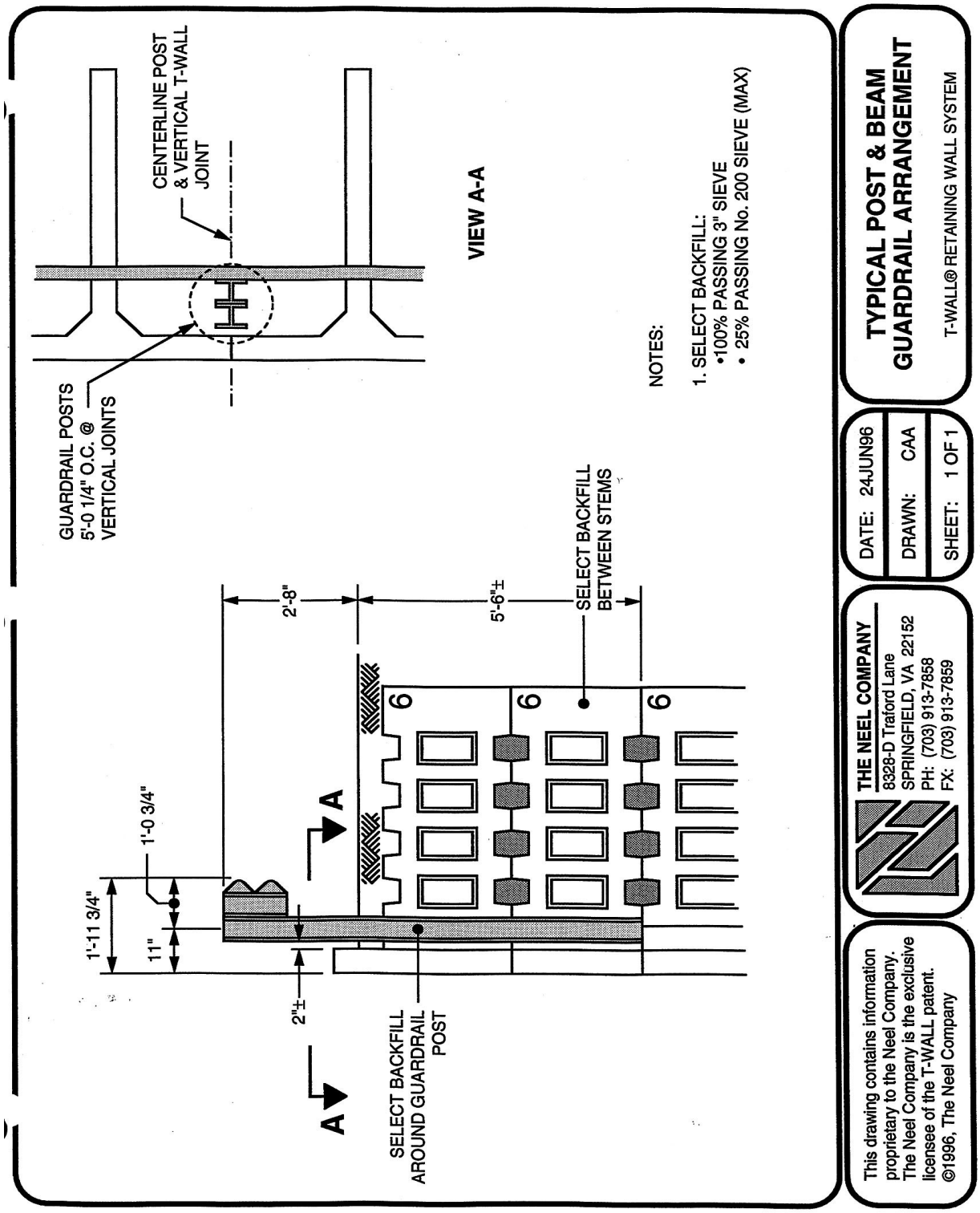
CENTERLINE POST
& VERTICAL T-WALL
JOINT
GUARDRAIL POSTS
5'-0 1/4" O.C. @
VERTICAL JOINTS
VIEW A-A
NOTES:
1. SELECT BACKFILL:
•100% PASSING 3" SIEVE
• 25% PASSING No. 200 SIEVE (MAX)
2'-8"
5'-6"±
SELECT BACKFILL
BETWEEN STEMS
1'-0 3/4"
1'-11 3/4"
11"
2"±
A
A
SELECT BACKFILL
AROUND GUARDRAIL
POST
6
6
6
TYPICAL POST & BEAM
GUARDRAIL ARRANGEMENT
T-WALL® RETAINING WALL SYSTEM
DATE: 24JUN96
DRAWN: CAA
SHEET: 1 OF 1
THE NEEL COMPANY
8328-D Traford Lane
SPRINGFIELD, VA 22152
PH: (703) 913-7858
FX: (703) 913-7859
This drawing contains information
proprietary to the Neel Company.
The Neel Company is the exclusive
licensee of the T-WALL patent.
©1996, The Neel Company

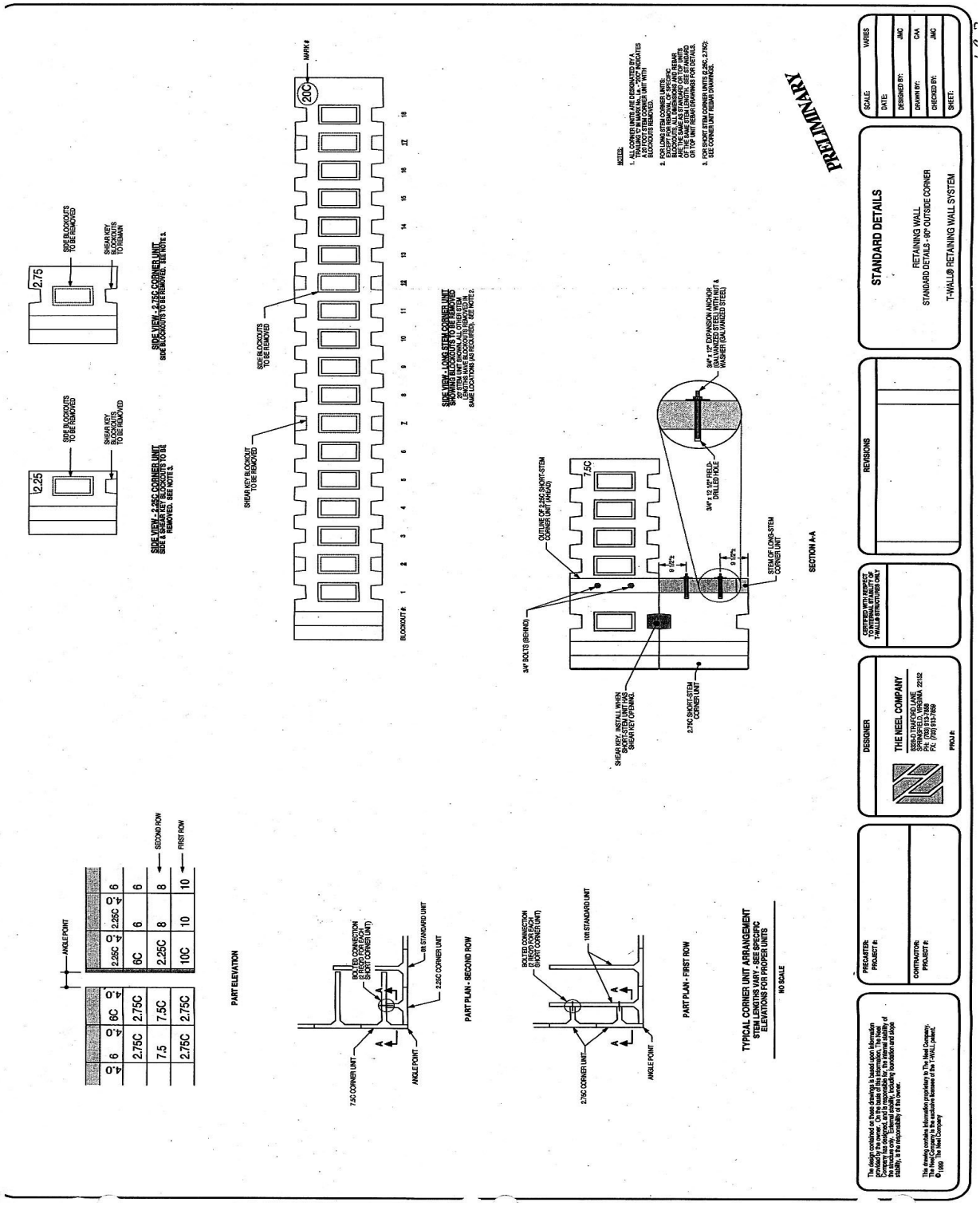
SIDE VIEW - 2.25C CORNER UNIT
SIDE & SHEAR KEY BLOCKOUTS TO BE REMOVED. SEE NOTE 3.
SIDE VIEW - 2.75C CORNER UNIT
SIDE BLOCKOUTS TO BE REMOVED. SEE NOTE 3.
SIDE VIEW - LONG STEM CORNER UNIT
SHOWING BLOCKOUTS TO BE REMOVED
(STEM LENGTHS VARY - SEE SPECIFIC ELEVATIONS FOR PROPER UNITS. LENGTHS HAVE BLOCKOUTS TRIMMED IN SAME LOCATIONS (AS REQUIRED). SEE NOTE 2.
PART ELEVATION
PART PLAN - SECOND ROW
PART PLAN - FIRST ROW
TYPICAL CORNER UNIT ARRANGEMENT
STEM LENGTHS VARY - SEE SPECIFIC ELEVATIONS FOR PROPER UNITS
NO SCALE
SECTION A-A
NOTES:
1. ALL CORNER UNITS ARE DESIGNATED BY A TRIANGULAR MARK. A 20 FOOT STEM CORNER UNIT WITH A 20 FOOT STEM CORNER UNIT WITH BLOCKOUTS REMOVED.
2. FOR LONG STEM CORNER UNITS: BLOCKOUTS ARE REMOVED AT SPECIFIC BLOCKOUTS. ALL DIMENSIONS AND REBAR LOCATIONS ARE ALWAYS MEASURED FROM OF THE SAME STEM LENGTH. SEE STANDARD DETAILS FOR DIMENSIONS OF STANDARD 10 FOOT UNIT REBAR DIAGRAM.
3. FOR SHORT STEM CORNER UNITS: 2.25C, 2.75C: SEE CORNER UNIT REBAR DIAGRAMS.
PRELIMINARY
STANDARD DETAILS
RETAINING WALL
STANDARD DETAILS - 90° OUTSIDE CORNER
T-WALL® RETAINING WALL SYSTEM
REVISIONS
DESIGNER
THE NEEL COMPANY
PRECASTER:
PROJECT #:
CONTRACTOR:
PROJECT #:
SCALE: VARIES
DATE:
DESIGNED BY: JMC
DRAWN BY: CAA
CHECKED BY: JMC
SHEET:

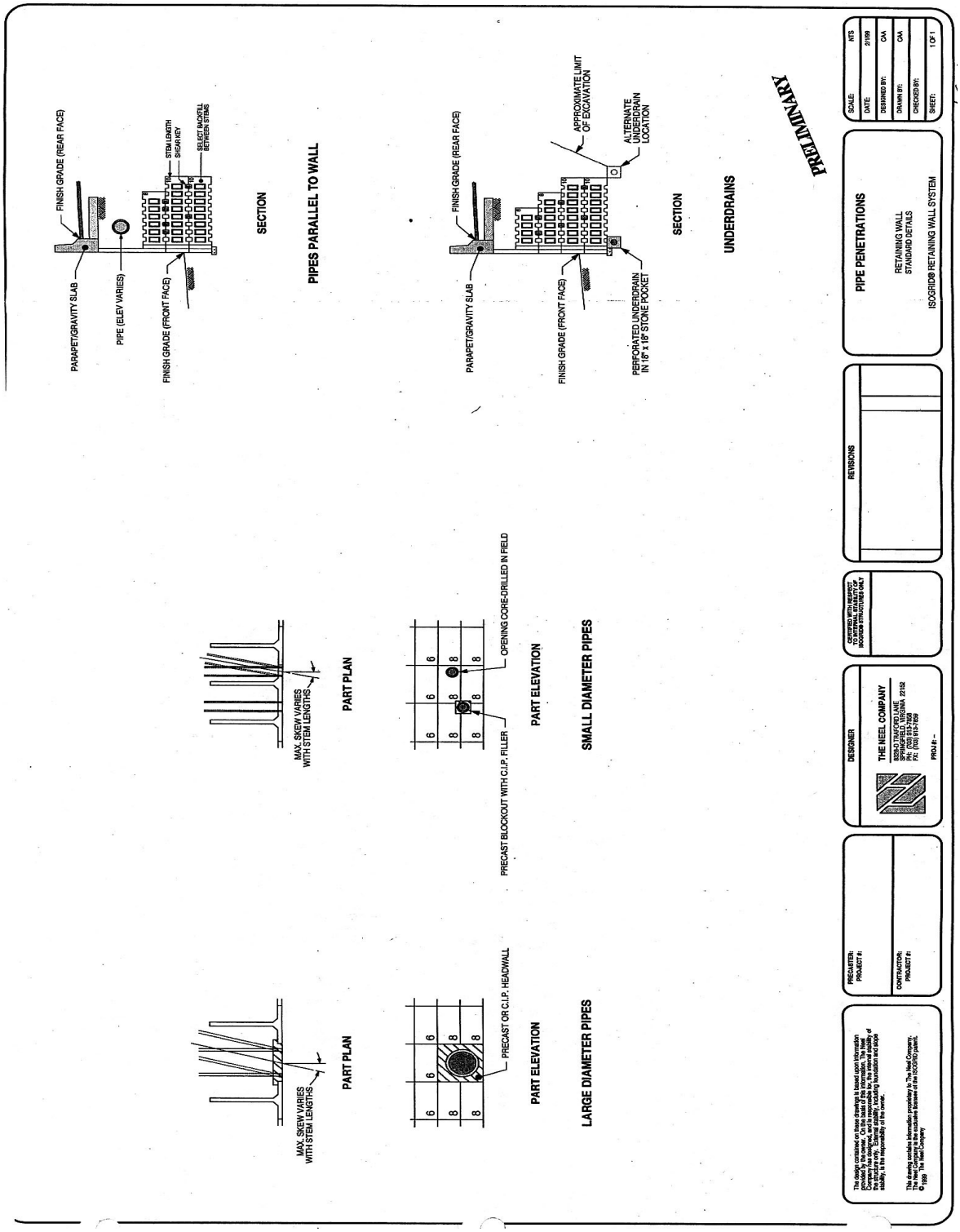
FINISH GRADE (REAR FACE)
PARAPET/GRAVITY SLAB
PIPE (ELEV VARIES)
FINISH GRADE (FRONT FACE)
STEM LENGTH SKEWED
SELECT BACKFILL BETWEEN STEMS
SECTION
PIPES PARALLEL TO WALL
APPROXIMATE LIMIT OF EXCAVATION
ALTERNATE UNDERDRAIN LOCATION
PERFORATED UNDERDRAIN IN 16" x 16" STONE POCKET
UNDERDRAINS
PRELIMINARY
MAX. SKEW VARIES WITH STEM LENGTHS
PART PLAN
PRECAST OR C.I.P. HEADWALL
PART ELEVATION
LARGE DIAMETER PIPES
PRECAST BLOCKOUT WITH C.I.P. FILLER
OPENING CORE-DRILLED IN FIELD
SMALL DIAMETER PIPES
PRECAST/:
PROJECT #:
CONTRACTOR:
DESIGNER
THE NEEL COMPANY
REVISIONS
PIPE PENETRATIONS
RETAINING WALL STANDARD DETAILS
ISOGRID® RETAINING WALL SYSTEM
SCALE: NTS
DATE: 2/1/99
DESIGNED BY: CAA
DRAWN BY: CAA
CHECKED BY:
SHEET: 1 OF 1

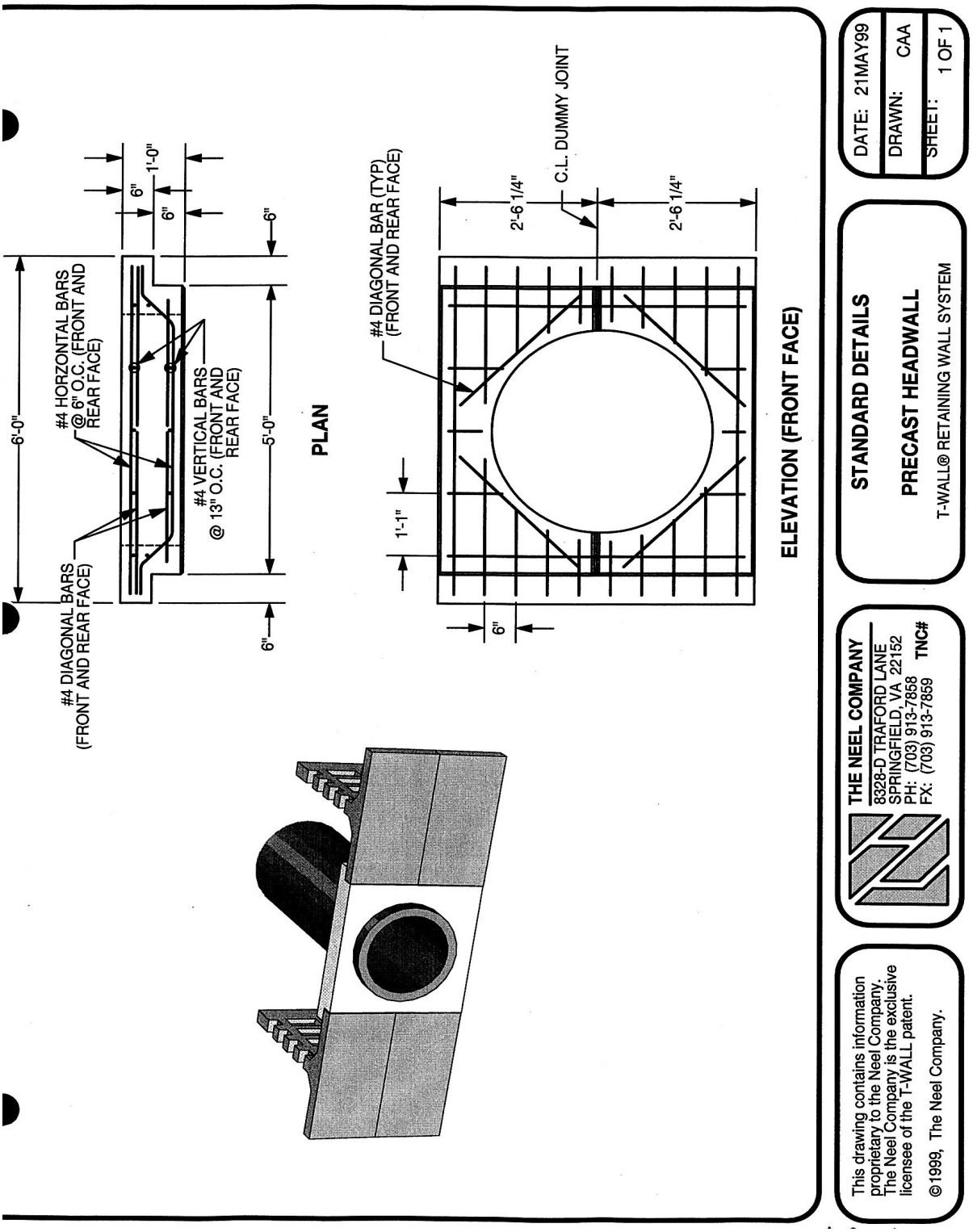
6'-0"
#4 HORZONTAL BARS @ 6" O.C. (FRONT AND REAR FACE)
#4 DIAGONAL BARS (FRONT AND REAR FACE)
6"
1'-0"
6"
#4 VERTICAL BARS @ 13" O.C. (FRONT AND REAR FACE)
5'-0"
6"
PLAN
#4 DIAGONAL BAR (TYP) (FRONT AND REAR FACE)
C.L. DUMMY JOINT
2'-6 1/4"
2'-6 1/4"
1'-1"
6"
ELEVATION (FRONT FACE)
DATE: 21MAY99
DRAWN: CAA
SHEET: 1 OF 1
STANDARD DETAILS
PRECAST HEADWALL
T-WALL® RETAINING WALL SYSTEM
THE NEEL COMPANY
8328-D TRAFORD LANE
SPRINGFIELD, VA 22152
PH: (703) 913-7858
FX: (703) 913-7859
TNC#
This drawing contains information proprietary to the Neel Company. The Neel Company is the exclusive licensee of the T-WALL patent.
©1999, The Neel Company.

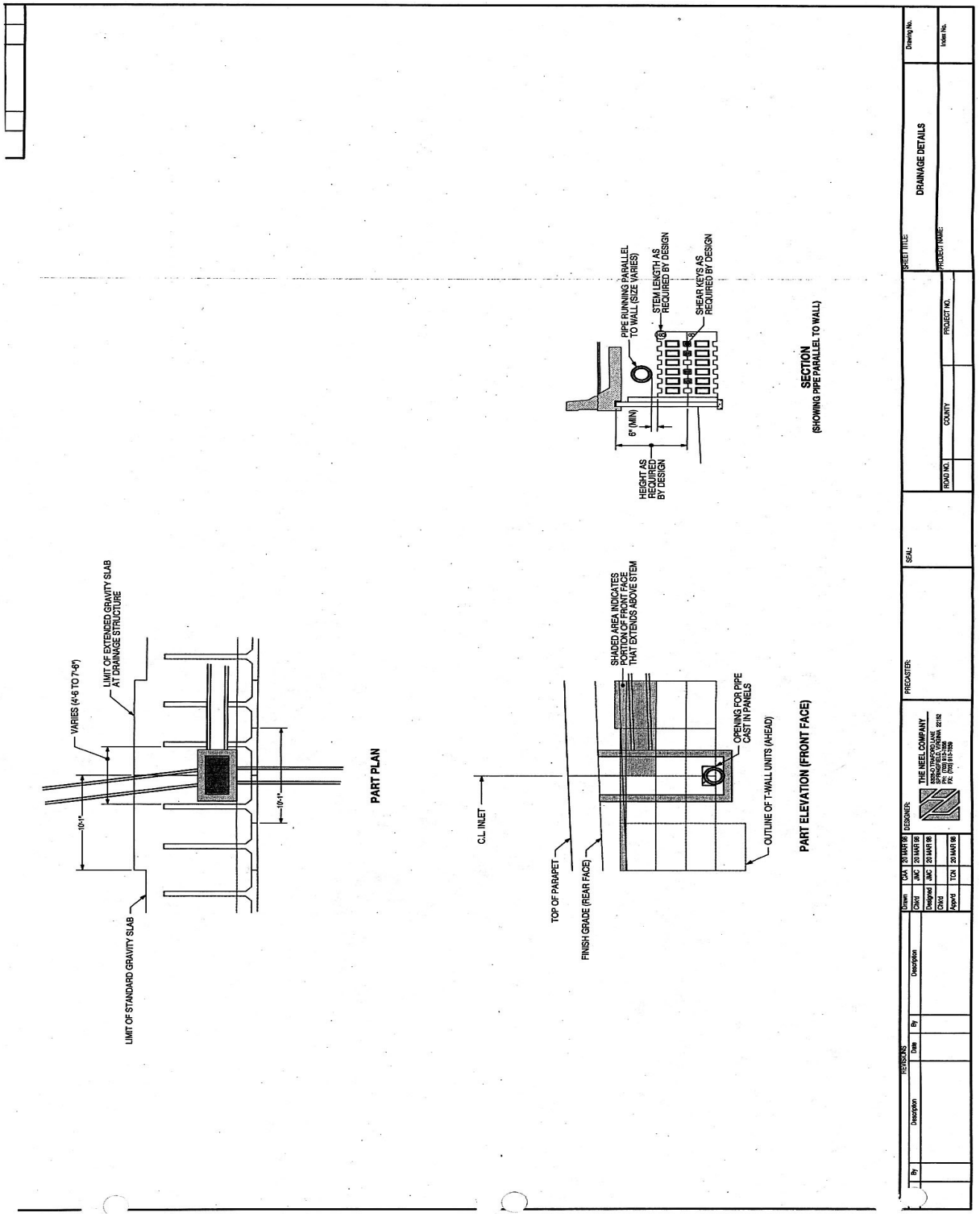
VARIES (4'-6 TO 7'-6")
LIMIT OF EXTENDED GRAVITY SLAB AT DRAINAGE STRUCTURE
10'-1"
10'-1"
LIMIT OF STANDARD GRAVITY SLAB
PART PLAN
PIPE RUNNING PARALLEL TO WALL (SIZE VARIES)
STEM LENGTH AS REQUIRED BY DESIGN
SHEAR KEY'S AS REQUIRED BY DESIGN
6" (MIN)
HEIGHT AS REQUIRED BY DESIGN
SECTION
(SHOWING PIPE PARALLEL TO WALL)
SHADED AREA INDICATES PORTION OF FRONT FACE THAT EXTENDS ABOVE STEM
OPENING FOR PIPE CAST IN PANELS
C.L. INLET
TOP OF PARAPET
FINISH GRADE (REAR FACE)
OUTLINE OF T-WALL UNITS (AHEAD)
PART ELEVATION (FRONT FACE)
DRAINAGE DETAILS
THE NEEL COMPANY

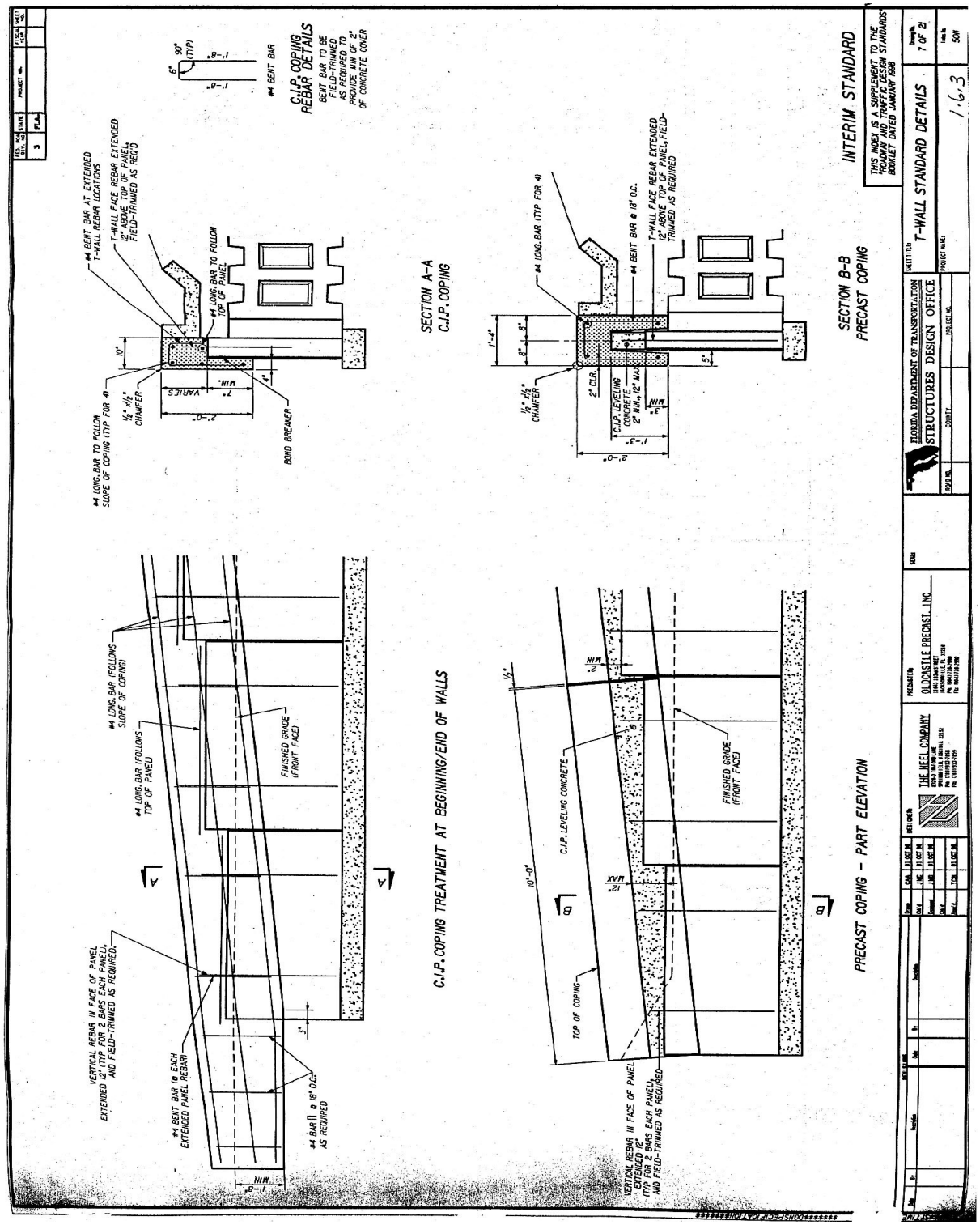
C.I.P. COPING REBAR DETAILS
#4 BENT BAR
BENT BAR TO BE FIELD-TRIMMED AS REQUIRED TO PROVIDE MIN OF 2" OF CONCRETE COVER
#4 BENT BAR AT EXTENDED T-WALL REBAR LOCATIONS
T-WALL FACE REBAR EXTENDED 12" ABOVE TOP OF PANEL, FIELD-TRIMMED AS REQ'D
#4 LONG. BAR TO FOLLOW TOP OF PANEL
#4 LONG. BAR TO FOLLOW SLOPE OF COPING (TYP FOR 4)
1/2" x 1/2" CHAMFER
BOND BREAKER
SECTION A-A
C.I.P. COPING
#4 LONG. BAR (TYP FOR 4)
#4 BENT BAR @ 18" O.C.
T-WALL FACE REBAR EXTENDED 12" ABOVE TOP OF PANEL, FIELD-TRIMMED AS REQUIRED
C.I.P. LEVELING CONCRETE
SECTION B-B
PRECAST COPING
INTERIM STANDARD
THIS INDEX IS A SUPPLEMENT TO THE "PRECAST/PRESTRESSED STANDARDS BOOKLET DATED JANUARY 1998
T-WALL STANDARD DETAILS
FLORIDA DEPARTMENT OF TRANSPORTATION
STRUCTURES DESIGN OFFICE
#4 LONG. BAR (FOLLOWS SLOPE OF COPING)
#4 LONG. BAR (FOLLOWS TOP OF PANEL)
FINISHED GRADE (FRONT FACE)
VERTICAL REBAR IN FACE OF PANEL EXTENDED 12" (TYP FOR 2 BARS EACH PANEL) AND FIELD-TRIMMED AS REQUIRED
#4 BENT BAR @ EACH EXTENDED PANEL REBAR
#4 BAR @ 18" O.C. AS REQUIRED
C.I.P. COPING TREATMENT AT BEGINNING/END OF WALLS
C.I.P. LEVELING CONCRETE
TOP OF COPING
VERTICAL REBAR IN FACE OF PANEL EXTENDED 12" (TYP FOR 2 BARS EACH PANEL) AND FIELD-TRIMMED AS REQUIRED
PRECAST COPING - PART ELEVATION
THE NEEL COMPANY
OLDCASTLE PRECAST, INC.
1.6.3