Washington State Department of Transportation

Publications Transmittal

Transmittal Number	Date
PT 03-048	July 2003
Publication Distribution	
To: All *Construction Manual* holders	
Publication Title	Publication Number
Construction Manual - Revision 2003-3	M 41-01
Originating Organization	
Washington State Department of Transportation, and Construction Office through Engineering Publications	

Remarks:
Starting with this update, we are trying a new system for identifying the revisions made to the manual, by underlining them. We will continue to provide the change bar for ease of identification of the specific revisions while thumbing through the manual.

Additional copies may be purchased from:
Washington State Department of Transportation
Finance and Administration
Administrative and Engineering Publications
PO BOX 47408
Olympia, WA 98504-7408

Phone: (360) 705-7430
Fax: (360) 705-6861
E-mail: engrpubs@wsdot.wa.gov

Please e-mail us if you no longer desire to receive updates, have a quantity change, or your address has changed.

For questions regarding the content of this revision, contact Dave Mounts at (360) 705-7831 or e-mail MountsD@wsdot.wa.gov

Instructions:
Page numbers and corresponding sheet-counts are given in the table below to indicate portions of the *Construction Manual* that are to be removed and inserted to accomplish this revision.

Chapter	Remove		Insert	
	Pages	Sheets	Pages	Sheets
Chapter 1 Contents	i-vi	3	i-iv	2
Chapter 1 Administration	1-74	37	1-72	36
Chapter 6 Structures	21-22	1	21-22	1
Chapter 8 Miscellaneous Construction	1-2	1	1-2	1
Chapter 9 Contents	i-iv	2	i-iv	2
Chapter 9 Materials (White Pages Only)	1-62	31	1-58	29
Chapter 10 Documentation	11-12	1	11-12	1
Index	i-v	3	i-v	3

Distributed By	Phone Number	Signature
Directional Documents and Engineering Publications	(360) 705-7430 FAX: 705-6861	Stephanie Williams

1-1 General Information 1
1-1.1 Purpose and Scope of Manual 1
1-1.2 Definition of Terms 1
1-1.3 WSDOT State Construction Office 1
1-1.3A State Construction Engineer 1
1-1.3A(1) Administration 1
1-1.3A(2) Roadway 2
1-1.3A(3) Bridges 2
1-1.4 Materials 2
1-1.5 Region Organization 2
1-1.5A Regional Administrator 2
1-1.5B Regional Construction Manager 2
1-1.6 Relationship With Other Agencies 2
1-1.6A Federal Highway Administration 2
1-1.6B Local Agencies 4
1-1.6B(1) Project Engineer Administering Local Agency Project 4
1-1.6B(2) Local Agency Administering Its Project on State Right of Way 4
1-1.6C Other Federal, State, and Local Agencies 4
1-1.6C(1) Highways over National Forest Lands 4
1-1.7 Relating to the Public 4
1-1.8 Safety 4
1-1.9 Archaeological and Historical Objects 5
1-1.10 Construction Work in International Boundary Strip 6

1-2 Contract Administration 6
1-2.1 Proposal and Award of Contract 6
1-2.1A Contract Proposal and Bids 6
1-2.1B Award and Execution of Contract 6
1-2.1C Preconstruction Meetings, Discussions 7
1-2.2 Project Engineer's Relationship and Responsibilities 10
1-2.2A Assignment 10
1-2.2B Responsibility as a Public Official 11
1-2.2C Relationship With the Contractor 11
1-2.2D Relationship With Other Government Agencies 11
1-2.2E Relationship With Public and Private Utilities 12
1-2.2F Responsibility for Coordination of Railroad Agreements 14
1-2.2G Responsibility for Railroad Encroachment Insurance 14
1-2.2H Responsibility for Coordinating Work With Other Contracts 14
1-2.2I Responsibility for Enforcement of Safety and Health Requirements 14
1-2.2I(1) General 14
1-2.2I(2) Precontract Preparation 15
1-2.2I(3) Preconstruction Duties 15
1-2.2I(4) The P.E.'s Role in Safety on the Project 15
1-2.2I(5) Pedestrian Safety 16
1-2.2J Responsibility for Environmental Considerations 16
1-2.2K Responsibility for Environmental Compliance During Construction 16
1-2.2K(1) Environmental Compliance Assurance Procedure 16
1-2.2L Responsibility for Posting Required FHWA and State Labor and Industries Job Site Posters 18
1-2.2M Responsibilities When Working on Tribal Lands 18

1-2.3 Construction Traffic Control 18
1-2.3A Public Convenience and Safety 18
1-2.3B Public Information and Customer Focus 19
1-2.3C Work Zone Traffic Control 19
1-2.3C(1) General 19
1-2.3C(2) Traffic Control Management 19
1-2.3C(3) One-Way Piloted Traffic Control Through Construction Zones 20
1-2.3C(4) Construction and Maintenance of Detours 20
1-2.3C(5) Road/Ramp Closures 21
1-2.3C(6) Traffic Control Plans 21
1-2.3C(7) Conformance to Established Standards 21
1-2.3C(8) Construction Signs 22
1-2.3C(9) Flaggers, Spotters and Traffic Control Labor 22
1-2.3C(10) WSP Traffic Control Assistance 23
1-2.3D Speed Reductions 23
1-2.3E Records of Construction Signing, Accidents, and Surveillance 23
1-2.3F Resources for Traffic Control and Work Zone Safety 24
1-2.4 Application of Contract Provisions, Plans, and Specifications 24
1-2.4A Construction Contracts Information System (CCIS) 24
1-2.4B Order Lists 25
1-2.4C Changes in the Work 25
1-2.4C(1) Types of Changes 25
1-2.4C(2) Equitable Adjustment 30
1-2.4C(3) Approval of Changes/Checklist 32
1-2.4C(4) Delegation of Execution Authority 34
1-2.4C(5) Verbal Approval 35
1-2.4C(6) Documentation 35
1-2.4C(7) Minor Changes 36
1-2.4D Force Account 37
1-2.4D(1) General 37
1-2.4D(2) Payment Procedures for Force Account Work 38
1-2.4D(3) Records and Source Documents 41
1-2.4D(4) Summary 41
1-2.4E Differing Site Conditions (Changed Conditions) 41
1-2.4F Termination of Contract 42
1-2.4G Subletting Portions of the Contract 42
1-2.4H Contractors' Shop Plans and Working Drawings 42
1-2.4I Relief of Responsibility for Completed Work and Relief of Responsibility for Damage by Public Traffic 42
1-2.4J Protested Work 43
1-2.4K Metric Designed Projects Administered with English Standard Specifications 43
1-2.5 Contract Time 44
1-2.5A General 44
1-2.5B Working Day Charges 44
1-2.5C Suspension of Work and Delay 47
1-2.5D Extension of Time 48
1-2.5E Substantial Completion 48
1-2.5F Date of Physical Completion 48
1-2.5G Liquidated Damages 48
1-2.5G(1) Contract Time Liquidated Damages 49
1-2.5G(2) Miscellaneous Liquidated Damages 50
1-2.5H Completion Date 50

1-2.6 Enforcement of Wage Rate Requirements 50
1-2.6A General Instructions 50
1-2.6B Monitoring of State Requirements 50
1-2.6C Enforcement of Federal Prevailing Wage Provisions 51
1-2.6C(1) Federal Prevailing Wage Rates 52
1-2.6C(2) Certified Payroll Inspection 52
1-2.6C(3) Employee Interviews 52
1-2.6C(4) Complaints 53
1-2.6C(5) Federal Prevailing Wage Violations 53
1-2.6C(6) Department of Labor Investigation 53
1-2.6C(7) Fraud Notice Poster 53
1-2.7 EEO, D/M/WBE and Training 53
1-2.7A Overview 53
1-2.7B EEO (Federally Funded Projects) 54
1-2.7B(1) Prompt Return of Retainage to All Subcontractors 54
1-2.7C EEO (State Funded Projects) 54
1-2.7D EEO (Federally Assisted Projects) 54
1-2.7E Minority and Women Owned Business Enterprise (MBE, WBE) 55
1-2.7F Disadvantaged Business Enterprise (DBE) 56
1-2.7F(1) GSP Includes No Goal 56
1-2.7F(2) GSP Includes Condition of Award (COA) Goal 56
1-2.7F(3) Additional Execution Documents 56
1-2.7F(4) DBE Reporting 56
1-2.7F(5) On Site Reviews 56
1-2.7F(6) Changes to the Condition of Award (COA) 56
1-2.7F(7) Substitution 57
1-2.7F(8) Condition of Award (COA) Change Orders 57
1-2.7G On-the-Job Training (OJT) 57
1-2.7G(1) On-the-Job Training Special Provisions — General 57
1-2.7G(2) OJT Required Reports 57
1-2.7G(3) Payment for “Training” 57
1-2.8 Control of Work 58
1-2.8A Authority of the Project Engineer 58
1-2.8B Contractor’s Equipment, Personnel, and Operations 58
1-2.8C Defective or Unauthorized Materials or Work 58
1-2.8C(1) Defective Materials 59
1-2.8C(2) Defective or Unauthorized Work 59
1-2.8C(3) Material Acceptance by Manufacturer’s Certificate 60
1-2.8D Contractor Submittals 60
1-2.8E Statement of Materials and Labor, Form FHWA-47 60
1-2.8F Contractor’s Performance Reports 61

1-3 Estimates and Records 61
1-3.1 Estimates
1-3.1A General 61
1-3.1B Progress Estimates 61
1-3.1B(1) Payment for Material on Hand 62
1-3.1B(2) Payment for Falsework 62
1-3.1B(3) Payment for Shoring or Extra Excavation 62
1-3.1B(4) Payment for Surplus Processed Material 62
1-3.1B(5) Liquidated Damages 63
1-3.1B(6) Credits 63
1-3.1B(7) Railroad Flagging 63
1-3.1B(8) Payment for Third Party Damages 63

1-3.1B(9) Withholding of Payments 64
1-3.1C Final Estimates — Regions 65
1-3.1D Final Estimates — Headquarters 66
1-3.1D(1) Final Estimate Claim Reservations 66
1-3.1D(2) Unilateral Acceptance of Final Estimates 66
1-3.1E Supplemental Final Estimates 66
1-3.1F Retained Percentage 67
1-3.2 Final Records for Projects Constructed by Contract 67
1-3.3 Disputes and Claims 67
1-3.3A Claims By the Contractor 67
1-3.3A(1) Disagreement, Dispute, Protest 67
1-3.3A(2) Claims 68
1-3.3A(3) Legal Filing 68
1-3.3A(4) Final Contract Voucher Certification 68
1-3.3B Claims Against the Contractor — Damage 68
1-3.3C Claims Against the Contractor — Money 69
1-3.3D Claims Against Officials and Employees 69
1-3.4 Stewardship 69

1-4 Utility and Railroad Relocation 69
1-4.1 Work Performed Under Utility Agreements 69
1-4.2 Work Performed Under Railroad Agreements 70

1-5 Surveying 70
1-5.1 Site Surveying 70
1-5.1A Permanent Monuments 70
1-5.1B Property Corner Monuments and Markers 70
1-5.1C Alignment Monumentation 70
1-5.2Construction Surveying 71
1-5.2A Surveying Provided by the State 71
1-5.2B Contractor Surveying 71

1-6 Inspection of Course Thicknesses 71

1-1 General Information

1-1.1 Purpose and Scope of Manual

This manual is published by the State Construction Office primarily as a resource for construction engineering personnel. It is intended as a convenient guide to requirements for Washington State transportation projects. The manual recognizes established standards and describes accepted engineering practices. The guidance provided by this manual is intended to identify desired results, establish standardized requirements, and serve as a general guide for the administration and construction of transportation related contracts.

Construction engineering staff responsible for work on construction contracts will want to be familiar with the guidance and instructions included in this manual. The guidance presented by this manual is intended to complement the requirements of the *Standard Specifications* and the contract provisions and to promote uniformity of results among all Regions of the Washington State Department of Transportation (WSDOT).

Suggestions for corrections, additions, or improvements to this manual, and to the *Standard Specifications* or *General Special Provisions* are welcomed and encouraged. Any means of communication with the Construction Office will be accepted and reviewed promptly.

1-1.2 Definition of Terms

In using this manual, the interpretation of words or terms should be considered the same as set forth under "Definitions and Terms" in Section 1-01 of the *Standard Specifications*. If a conflict should occur between the guidance or instructions offered by this manual and the specifications or provisions identified in the contract, the latter should always prevail.

1-1.3 WSDOT State Construction Office

The State Construction Office strives for consistent, cost-effective, quality construction through direct support of WSDOT's Regional construction program. The Construction Office coordinates the development of policies and standards, provides training, guidance, oversight, technical expertise and advocacy, introduces innovation, and coordinates and shares information on construction issues.

1-1.3A State Construction Engineer

The State Construction Engineer reports to the Director of Environmental and Engineering Programs and is assigned the responsibility for all WSDOT contract construction projects, except those contracts executed by the Director of Washington State Ferries Division. The State Construction Engineer is responsible for all matters pertaining to contract administration and represents the Director in managing the performance of these contracts. In addition, the State Construction Engineer acts for the Director in approving increases or decreases of work, changes in the work, changes in materials incorporated into the work, authority to accomplish work by force account, extensions of time, and the assessment of any liquidated damages. The State Construction Engineer is responsible for providing guidance and direction to the Regions and State Construction Office personnel who are investigating construction claims and is responsible for the approval of all claim settlements. The State Construction Engineer establishes WSDOT policy relative to inspection and documentation and ensures uniform interpretation and enforcement of the *Standard Specifications* and contract provisions throughout the State. The State Construction Engineer is assisted by three principal assistants for construction as outlined in the Table of Organization shown in Figure 1-1.

1-1.3A(1) Administration

The Construction Engineer, Administration, acts for the State Construction Engineer in setting requirements for contracting, policy, and responding to questions from the regions on all issues pertaining to Division 1 of the *Standard Specifications* and Chapters 1 and 10 of the *Construction Manual*. These include, but are not limited to, time extensions, external civil rights contract changes, prevailing wage issues, documentation, and claims resolution. The Construction Engineer, Administration, also represents WSDOT on task forces with contractor organizations, other public agencies, and at the legislature regarding public contracting issues.

The Construction Engineer, Administration, is assisted by:

- The *Assistant Construction Engineer, Administration*, who reviews time extensions and liquidated damage assessments, is responsible for prevailing wage issues, and represents the Construction Office on external civil rights issues. The Assistant Construction Engineer for Administration also acts as liaison to various external stakeholders and suppliers.
- The *Documentation Engineer*, who provides guidance for contract documentation and contract payments, as well as providing support to Region Documentation Engineers. The Documentation Engineer resolves issues of material documentation deficiencies for all federal aid projects.
- The *Specification Engineer*, who is responsible for maintaining the *Standard Specifications*, the *Construction Manual* and the *Equipment Rental Rate Blue Book*. The Specification Engineer is also responsible for preparing contract acceptance packages.

- The *Construction Administration Support Engineer*, who is the CCIS System Manager, the Construction Office Liaison to MIS, supports the Region and Project Engineer offices by providing training in the use of CCIS and the CCIS Sequel Database. This position also maintains the Construction Office intranet web page.

1-1.3A(2) Roadway

The Construction Engineer, Roadway, acts for the State Construction Engineer in matters of highway construction such as grading, drainage, surfacing, paving, signing, guard rails, illumination, traffic signals, landscaping, rest areas, and other projects as assigned.

For the purpose of establishing uniformity between the Regions, the Construction Engineer, Roadway, is responsible for establishing accepted practices for construction, construction engineering, and contract administration for work performed within these fields. Some of these responsibilities include inspecting projects, evaluating reasons for contract changes, approving change orders, conducting or assisting in contract negotiations, investigating complaints and claims, and providing recommendations on major changes to the State Construction Engineer.

The Construction Engineer, Roadway, is assisted by three professional engineers.

1-1.3A(3) Bridges

The Construction Engineer, Bridges, acts for the State Construction Engineer in matters for bridges and related structural construction, and other projects as assigned. For the purpose of establishing uniformity between the Regions, the Construction Engineer, Bridges, is responsible for establishing accepted practices for construction, construction engineering, and contract administration of work performed in construction of bridges and other related structural construction. Some of these responsibilities include inspecting projects, evaluating reasons for contract changes, approving change orders, conducting or assisting in contract negotiations, acting as a resource to the Regions for resolving construction related problems, investigating complaints and claims, and providing recommendations on major changes to the State Construction Engineer.

The Construction Engineer, Bridges, is assisted by two professional engineers.

1-1.4 Materials

The Materials Engineer acts for the Director of Environmental and Engineering Programs by directing the materials testing, inspecting, and acceptance functions of WSDOT. Subject to the approval of the Director of Environmental and Engineering Programs, the Materials Engineer; formulates and recommends policies and procedures; directs operating methods to be followed in providing precontract soils, foundation, and materials analysis and testing; recommends and/or approves Pavement Designs; furnishes counsel and technical assistance to the Regional Construction Manager in conducting required materials tests and analysis and provides for periodic review of these test methods and procedures to ensure their conformance to established policies, procedures, and methods; and provides a program that verifies the uniformity of all testing and sampling procedures.

The Materials Engineer is assisted by a staff of professional engineers, administrative personnel, engineers, and technicians.

1-1.5 Region Organization

1-1.5A Regional Administrator

The Regional Administrator represents the Secretary in a geographic area, organizes and supervises a staff of personnel which perform administrative duties and supervise location, design, construction administration, and maintenance of the transportation system within the Region.

1-1.5B Regional Construction Manager

In supervision of construction, the Regional Administrator is assisted by a Regional Construction Manager. The Regional Construction Manager assigns Project Engineers with appropriate supporting personnel and provides training and guidance to the Project Engineers. It is the responsibility of the Regional Construction Manager to ensure that sufficient personnel are provided on all projects at all times to ensure adequate inspection, documentation, and quality controls.

1-1.6 Relationship With Other Agencies

1-1.6A Federal Highway Administration

The Federal Government provides transportation funding to Washington State through the Federal Highway Administration (FHWA), a division of the United States Department of Transportation. These funds are subject to applicable Federal law, Executive Orders, regulations, and agreements.

The WSDOT contact with FHWA for Construction Administration matters is the State Construction Office. In preparing and approving standard specifications, general special provisions, and this manual, the Construction Office seeks the review and approval of FHWA. Use of approved provisions and meeting the required outcomes described in the manual become the basis of federal reimbursement.

FHWA provides oversight of WSDOT work on some projects and has delegated that responsibility to WSDOT on others. In accordance with the Construction Monitoring Plan, which is part of the WSDOT/FHWA Stewardship agreement, project type and size determine whether FHWA, the Construction Office, or the Region will conduct the inspections and reviews necessary to verify adequate compliance with the Federal rules, regulations and procedures.

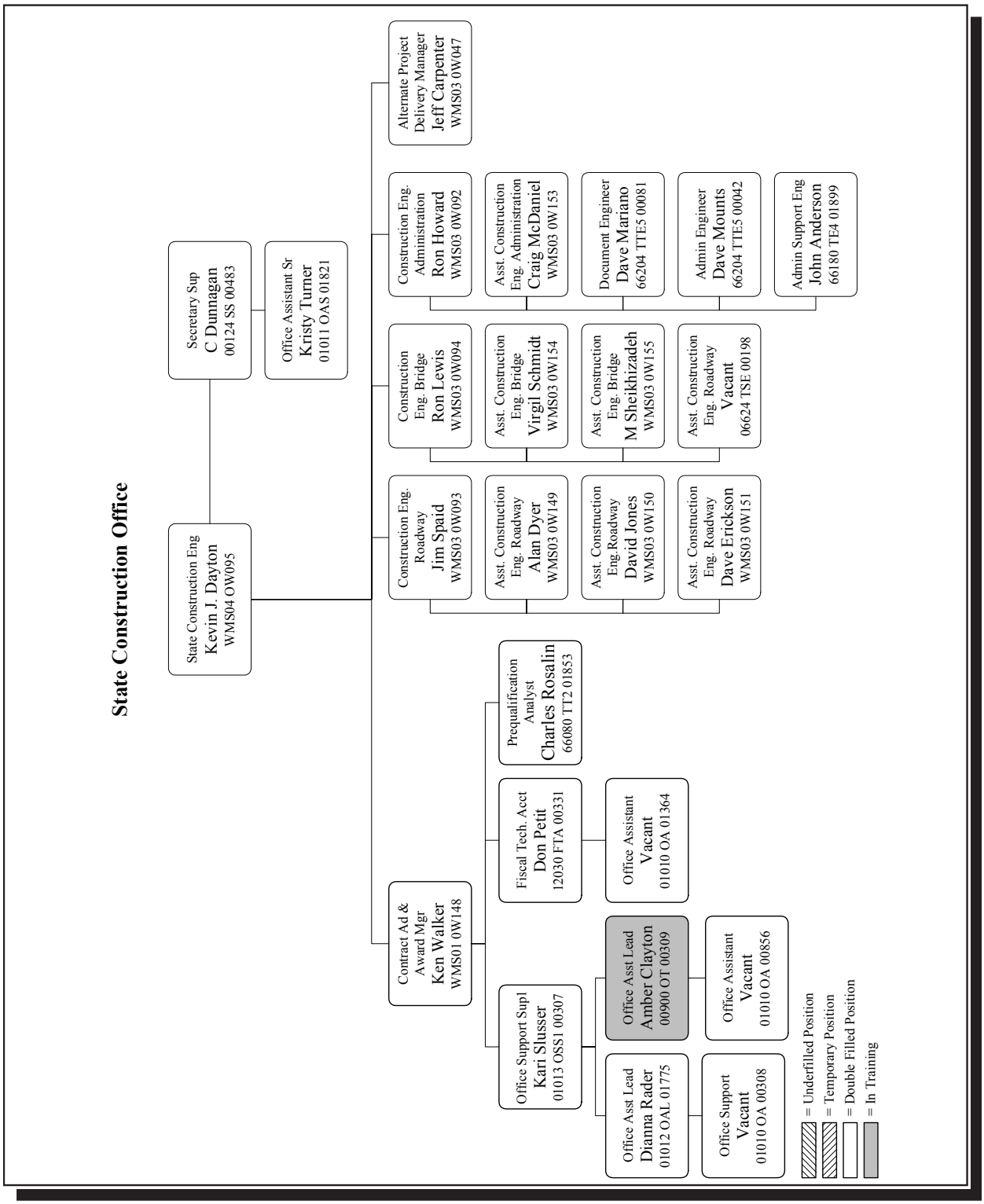
State Construction Office
State Construction Eng
Kevin J. Dayton
WMS04 OW095
Secretary Sup
C Dunnagan
00124 SS 00483
Office Assistant Sr
Kristy Turner
01011 OAS 01821
Contract Ad & Award Mgr
Ken Walker
WMS01 0W148
Office Support Supl
Kari Slusser
01013 OSS1 00307
Office Asst Lead
Dianna Rader
01012 OAL 01775
Office Support
Vacant
01010 OA 00308
Office Asst Lead
Amber Clayton
00900 OT 00309
Office Assistant
Vacant
01010 OA 00856
Fiscal Tech. Acct
Don Petit
12030 FTA 00331
Office Assistant
Vacant
01010 OA 01364
Prequalification Analyst
Charles Rosalin
66080 TT2 01853
Construction Eng. Roadway
Jim Spaid
WMS03 0W093
Asst. Construction Eng. Roadway
Alan Dyer
WMS03 0W149
Asst. Construction Eng.Roadway
David Jones
WMS03 0W150
Asst. Construction Eng. Roadway
Dave Erickson
WMS03 0W151
Construction Eng. Bridge
Ron Lewis
WMS03 0W094
Asst. Construction Eng. Bridge
Virgil Schmidt
WMS03 0W154
Asst. Construction Eng. Bridge
M Sheikhizadeh
WMS03 0W155
Asst. Construction Eng. Roadway
Vacant
06624 TSE 00198
Construction Eng. Administration
Ron Howard
WMS03 0W092
Asst. Construction Eng. Administration
Craig McDaniel
WMS03 0W153
Document Engineer
Dave Mariano
66204 TTE5 00081
Admin Engineer
Dave Mounts
66204 TTE5 00042
Admin Support Eng
John Anderson
66180 TE4 01899
Alternate Project Delivery Manager
Jeff Carpenter
WMS03 0W047
= Underfilled Position
= Temporary Position
= Double Filled Position
= In Training

Figure 1-1

1-1.6B Local Agencies

Cities, counties, and other municipalities within the state may also perform work funded with Federal dollars. When this happens, the money is passed through the Department of Transportation and we will have entered into agreements with the local agencies to provide services. For example, WSDOT will allow the use of testing facilities by a local agency.

1-1.6B(1) Project Engineer Administering Local Agency Project

Occasionally, a WSDOT Project Engineer may be assigned to provide engineering and inspection services on a local agency project. The duties of the Project Engineer will be determined by the actual contract provisions and by any specific agreement made between the Region administration and the local agency. The provisions of this manual may or may not apply, depending on the situation.

1-1.6B(2) Local Agency Administering Its Project on State Right of Way

In some cases, WSDOT may grant approval for a local agency to construct a facility on State Right of Way using local agency staff and contractors. (For example, a city funded overpass of an interstate). When this happens, a Project Engineer will be assigned to provide oversight of the local agency work. The Project Engineer is expected to assure that the local agency provides the same level of engineering and inspection that State employees would accomplish. All the requirements of the *Standard Specifications* and this manual must be met.

1-1.6C Other Federal, State, and Local Agencies

The design and construction of transportation improvements often incorporates locations and features that fall within the jurisdiction of other agencies. It is the policy of WSDOT to cooperate with all agencies as partners in the completion of each project, recognizing and complying with each agency's legal requirements. The Project Engineer shall cooperate with local authorities to help ensure that the contractor complies with local laws, ordinances, and regulations. However, unless specifically allowed in the statutes and the contract documents, no WSDOT employee shall engage in any kind of enforcement of laws, rules, regulations, or ordinances which are the responsibility of other agencies. As WSDOT attempts to earn confidence and build trust with resource agencies and the public, it is critical that we take the proper actions when we are aware of an issue. When WSDOT employees observe something which is questionable or appears to not be in compliance with local laws, ordinances, and regulations, it shall be brought to the Project Engineer's attention. The Project Engineer is responsible for bringing it to the Contractor's attention for proper action. Rely on the Regional and Headquarters expertise and the appropriate agencies when dealing with complex issues such as environmental compliance, safety, or hazardous materials.

1-1.6C(1) Highways over National Forest Lands

WSDOT has entered into a Memorandum of Understanding (MOU) with the United States Forest Service (USFS) and the Project Engineer is required to do the following when performing work on National Forest Service Lands:

1. Represent the department in all matters pertaining to the project.

2. Confirm that the USFS has been notified of the project advertisement and award.

3. Notify and obtain approval from the USFS for any changes in the project that will affect National Forest System Lands, beyond that of the original contract.

4. Notify the USFS when the project nears completion, at which time the USFS will indicate if they choose to participate in the final review of the project.

1-1.7 Relating to the Public

Public confidence is enhanced by WSDOT personnel being responsive to reasonable requests for information, providing timely advanced notice of possible impacts, and reducing inconvenience to traffic while maintaining worker safety. When possible, the Project Engineer should rely on resources such as Regional Public Information Officers and the State Office of Communications and Public Involvement. If there is concern or reason to question the confidentiality or sensitivity of the information requested, consult with your supervisor or seek the advice of the Attorney General's office.

1-1.8 Safety

Safety is not optional in WSDOT. No employee will be permitted to disregard applicable safety and health standards of the State Department of Labor and Industries or other regulatory agencies.

Since WSDOT employees on transportation construction projects are routinely exposed to a variety of hazards, they must take adequate safety precautions at all times. The following items are emphasized as they represent common activities that workers or work crews may encounter.

- The employee shall ensure that an area is safe before entering it for the purpose of inspection. For example, a deep trench must be adequately shored and braced before entering it.
- Aggregate production and material processing plants should be inspected for safety hazards. Corrective measures should be called to the attention of the Contractor or producer. Corrections must be completed before WSDOT personnel will be permitted to proceed with entry or work upon the premises.

- The employee must at all times watch for backing trucks and not depend upon hearing alone for warning. The noise of plants and other equipment often make it impossible to hear trucks approaching and the truck driver's vision area is restricted when backing a truck.
- Parking WSDOT vehicles too close to the path of construction equipment, behind standing equipment, or in other hazardous locations is not permitted.
- Where traffic is maintained in work zones, care must be taken to avoid approaching traffic when it is necessary for inspectors and others to step onto or cross the traveled portion of the roadway. Whenever possible, work activities, ingress and egress, should be conducted within the relative safety of the work zone.
- WSDOT employees working on foot in the highway right of way and other areas exposed to vehicular traffic must comply with the same high visibility clothing requirements imposed on the contractor by Section 1-07.8 of the *Standard Specifications*.
- Where the engineering crew is working adjacent to traffic, without positive barriers, the work area should be marked with proper signs and traffic control devices as shown on the appropriate Traffic Control Plan (TCP). The crew may be protected by a certified flagger or spotter as needed.
- When the engineering crew is working under the protection of the Contractor's flaggers and signs, other signs may not be needed, but a "STOP"/"SLOW" paddle should be available for use in special situations. Good communication with the Contractor and Flagger is needed to ensure that they are aware of crew activities within the work zone.
- A survey crew is typically exposed to traffic hazards and should conduct survey work under approved TCPs from the *Work Zone Traffic Control Guidelines for Survey Operations* booklet or the Traffic Control Guidelines book. The Region Traffic Office will assist survey crews with TCPs for situations not covered in these publications.
- During blasting operations, employees are instructed to seek cover at least 500 feet from the location of the blasting.

In addition to the above requirements for workers and work crews, supervisors also have the following responsibilities:

- Each supervisory employee is charged with the responsibility of providing safety leadership at all times and safety enforcement when necessary.
- Supervisors shall give thorough instructions to employees under their jurisdiction on the safe use of tools, materials, and equipment and the safe prosecution of work on construction projects.
- The Washington Industrial Safety and Health Act requires that every foreman, supervisor, or other person in charge of a crew have a valid first aid card.
- When employees are injured on the job to the extent that the services of a doctor are required, the Regional Safety Officer shall be notified immediately.
- When traffic control measures are necessary, approved Traffic Control Plans (TCPs) should be used in conformance with the *Manual on Uniform Traffic Control Devices,* as adopted by WSDOT. Supervisors should ensure that the appropriate TCP is used and that the necessary signs, devices and equipment is available.

1-1.9 Archaeological and Historical Objects

It is both National and State policy to preserve historical or prehistorical objects and ruins. These objects and ruins may include sites, buildings, artifacts, fossils, or other objects of antiquity that may have particular significance from a historical, cultural, or scientific standpoint.

If there is a known probability of encountering historical objects, the contract will have included provisions for archaeological and historical salvage. If this provision is included in the project, the Project Engineer should inform the Region Environmental section when clearing and grubbing operations are to begin so arrangements can be made with the Eastern Washington University representatives to either be on site during clearing and grubbing or on call if objects are discovered.

If provisions for archaeological and historical salvage have not been made in the contract and it appears that significant historic or prehistoric objects or ruins have been or are about to be encountered, the Project Engineer should immediately take steps to preserve and protect the objects or ruins. Once the objects or ruins have been sufficiently protected, the Project Engineer should immediately notify the Region Construction Manager, who will provide any necessary initial assistance to the Project Engineer. Where the Region determines appropriate, the Project Engineer will contact and inform through existing Region contracts and Region affiliations, Eastern Washington University, the State Historic Preservation Officer (SHPO), and FHWA of the discovery. The Project Engineer will also help facilitate any on-site meetings for the appropriate parties should either FHWA, SHPO, or Eastern Washington University believe it necessary. If it is determined that the Region will conduct a meeting of the appropriate parties, the actions detailed in the Memorandum of Understanding between FHWA and the Heritage Conservation and Recreation Service (HCRS) should be taken.

1-1.10 Construction Work in International Boundary Strip

The International Boundary Commission of Washington, D.C., by treaty with Canada, has the exclusive jurisdiction of the 20-foot boundary strip, 10 feet on each side of the International Boundary. Any construction work within this strip must be with the exclusive permission of the International Boundary Commission (IBC). Boundary monuments are not to be moved or disturbed in any manner without the expressed approval of the IBC. It is expected that permission for all work within the boundary strip will be obtained from the IBC during the design stage of a project. However, it is the Project Engineer's responsibility to ascertain that permission has, in fact, been obtained from the IBC for all work performed within the boundary strip. The Region shall be immediately notified if, upon construction, it is found that permission has not been obtained in order to relocate boundary markers or perform construction work in the 20 foot boundary strip.

1-2 Contract Administration

1-2.1 Proposal and Award of Contract

1-2.1A Contract Proposal and Bids

When the design phase of a project is completed and funding has been secured, the public is then notified that WSDOT is ready to accept bids for completion of the work involved. This notice is accomplished by publishing an advertisement for the project, along with an invitation to bid the work, in the "*Daily Journal of Commerce*". The advertisement includes a specific date and time for the opening of bids along with the necessary information for obtaining plans, specifications, and bid documents. Once advertised, these plans and specifications are then made available to all contractors who wish to study the project. Contract proposal forms or bid documents are also furnished, but only to those prospective contractors who have been prequalified to bid on the types and quantities of work involved. Once bids have been opened, an announcement in the "*Daily Journal of Commerce*" will also be made identifying the "Apparent Low Bidder". Specific information regarding the advertisement phase and bidding procedures can be found in the *Ad & Award Manual,* M 27-02

If the Project Engineer determines that prospective bidders may have difficulty locating the project or determining the project limits, the Project Engineer may choose to post the project limits. If this is determined necessary, signs similar to those illustrated in Figure 1-3 should be used.

Section 1-02.4 of the *Standard Specifications* requires that all requests for explanation or interpretation of the contract documents be submitted in writing. Anytime the answer to a question from a prospective bidder would provide additional information that would not be available to all bidders, the Project Engineer should immediately contact the Region Construction Manager or Region Plans Office in order to facilitate the preparation of an Addendum. Answers to such questions must be provided to all bidders in the same manner. If the question has to do with generic issues such as office procedures (for example, methods of payment calculation or handling requests for information,) the answer may be provided directly to the questioning party without involving other bidders.

All questions from prospective bidders regarding an advertised project should be referred to the Project Engineer listed in the "Notice to All Planholders" for a complete response. The Project Engineer will coordinate the effort to determine if any requested information needs to be addressed by an addendum.

1-2.1B Award and Execution of Contract

Bids for the contract are opened at a public meeting where each prospective bidder's proposal is read and the Apparent Low Bidder is announced. Within 45 calendar days of bid opening, the proposals will be closely reviewed and the contract will be awarded to the lowest bidder deemed responsive. In accordance with Section 1-03 of the *Standard Specifications*, the successful bidder is then allowed 20 calendar days to return the signed documents that are necessary to enter into a contract with WSDOT.

After these documents are returned to WSDOT, the contract must be approved and executed. No proposal submitted by a Contractor is binding upon WSDOT prior to the date of execution by WSDOT. No work is to be performed within the project limits or WSDOT furnished sites prior to the execution of the contract by WSDOT. Any work that is performed by the Contractor outside of these areas, or any material that is ordered prior to WSDOT execution, is done so solely at the risk of the Contractor.

In order to ensure timely notification to the Contractor regarding execution of the contract and authority to proceed, the following procedure is used:

1. Immediately after execution of the contract documents by WSDOT, the State Accounting Services Office or (for Region Ad & Award projects) the Region Plans Office will notify the office administering the contract (the Regional Construction Manager's Office, the Director of Terminal Engineering, or the Architecture Office). The State Accounting Services Office also notifies the State Department of Revenue, State Department of Labor and Industries, and other interested parties that the contract has been executed.

2. The Regional Construction Manager or a representative should contact the Project Engineer's office as soon as notification is received. The Project Engineer should then contact the Contractor and provide notification of the execution date. The date, time, and method of notification in all instances should be recorded in the project diary.

3. Following the initial contact, the State Accounting Services Office or the Region Plans Office will send executed copies of the contract to the Contractor and the Project Engineer.

1-2.1C Preconstruction Meetings, Discussions

If the Project Engineer decides a formal meeting is necessary in order to successfully begin work on the project, a meeting should be arranged as soon as practical after the contract is awarded and the Contractor has organized for the work. This preconstruction meeting is intended for the purpose of discussing the project and to exchange a variety of information. Depending upon the complexity of the project, this information can be exchanged in any combination of the following methods:

- Information packets provided to the Contractor
- Letters transmitting information
- Informal meetings
- A single multipurpose formal meeting
- Several formal meetings with different purposes

All information exchanged should be documented in the project records, by formal meeting minutes, by file copies of letters, or by diary entries.

The nature, amounts, and methods of communication with the Contractor are left to the Project Engineer. As a minimum, the following subject areas should be covered during the preconstruction time period:

- CONTRACTOR WSDOT RELATIONSHIPS

  The Project Engineer should begin to develop a positive and effective relationship with the Contractor as soon as the contract is awarded. This is also a good time to introduce the concept of "Partnering" if it has not already been introduced on the project. The Project Engineer should strive to create an environment that encourages a cooperative approach to completing the project. This can be helped by beginning the development of a team consisting of both the Contractor's and WSDOT's project people. The level of authority delegated to each member of the Project Engineer's staff should be discussed with the Contractor. In addition the methods of establishing the Contractor's Performance ratings can be reviewed (Manual M 41 40) (see Chapter 1-2.8F of this manual for additional information). The Contractor should also be informed that there is an opportunity to evaluate the WSDOT construction process as well.

- ENVIRONMENTAL COMMITMENTS

  If there are commitment files for the project, these should be made available and discussed with the Contractor. Any references in the *Standard Specifications* or the special provisions to environmental requirements or permits should be discussed. The Contractor's responsibility to obtain any local agency permits should also be discussed. If rock crushers are involved in the project, the State Department of Ecology registration requirements should be discussed (WAC 173-400). In addition, a written record of this discussion should be sent to the regional office of the State Department of Ecology so that they are aware of the timing and location of the rock crushing operation.

- ORDER OF WORK AND TIME SCHEDULES

  In order for the Project Engineer to set up the required crews, arrange for any special inspections, provide timely reviews of submittals, etc., the project office must be made aware of the contractor's schedule of work. In addition the contract specifications may include specific requirements for sequencing or durations for some items of work. The contract requirements for progress schedule or time for completion in accordance with Section 1-08, or as amended by the special provisions, can also be discussed.

- SUBCONTRACTORS AND LOWER-TIER SUBCONTRACTORS

  In accordance with Section 1-08.1 of the *Standard Specifications*, the Project Engineer needs to become aware of the Contractor's plans to delegate portions of the work to subcontractors. These plans must conform with the condition of award, if any, related to disadvantaged business enterprise participation. The Project Engineer should explain the requirements and process involved for subcontractor and lower-tier subcontractor approval, including the prevailing wage rate requirements outlined in the contract documents (see Chapter 1-2.6 of this manual). WSDOT/Contractor/Subcontractor relationships should also be discussed. The Project Engineer should remind the Contractor that there is no contractual relationship between WSDOT and the subcontractors. All subcontractor correspondence with WSDOT should pass through the Contractor for submittal to WSDOT or vice versa. Contractor representation should also be discussed. It is also necessary for the Contractor to be represented at the job site at all times, even when there is only subcontractor work in progress.

- UTILITIES, RAILROADS, AND OTHER THIRD PARTIES

  If the project affects or is affected by third party organizations, the Project Engineer must advise the Contractor about the relationships with the third parties and the expectations they hold regarding the actions of both WSDOT and the Contractor. The Project Engineer may wish to arrange face-to-face meetings with representatives of affected third parties. In the case of utilities, reference should be made to the underground locator services and the requirements to utilize them (see RCW 19.122). If WSDOT has agreed to notification time limits, these should be communicated to the Contractor. If special insurance is required by any agreements with third parties, then these requirements should be pointed out to the Contractor.

- SAFETY AND TRAFFIC CONTROL

  The Contractor's safety program should be discussed as outlined in Section 1-2.2I(3) of this manual. WSDOT has an interest in safe operations on the job and the Project Engineer should make clear that this interest will be protected. As part of a discussion of specific safety requirements of the particular work, safety considerations for workers and WSDOT personnel, such as safety zone requirements, vehicle intrusion protection, fall prevention, closed spaces, hazardous materials, work around heavy equipment, etc., should be addressed. The need for control of speed on all construction equipment should be emphasized.

  The Project Engineer should describe WSDOT's traffic requirements. The Contractor's Traffic Control Manager (TCM), Traffic Control Supervisor (TCS) and WSDOT's traffic control contact person should be identified and their responsibilities and authorities clearly stated. Any traffic control requirements that are unique or restrictive should be emphasized and addressed by the Contractor with respect to construction operations. Unacceptable delays to traffic should also be discussed.

  The *Manual on Uniform Traffic Control Devices*, as adopted by WSDOT, is the legal standard for all signing, traffic control devices and traffic control plan requirements on the project. These standards have been incorporated into the project Traffic Control Plans (TCPs.) If the Contractor chooses to use these TCPs, they must be formally adopted in writing as required in Section 1-10.2(2) of the *Standard Specifications*. If the Contractor wishes to use some other traffic control scheme, then that plan must be submitted and approved in advance.

  Flaggers and their intended locations must be included in the plans. When Flaggers are utilized, they must have a current flagging card and shall be equipped with hard hats, vests, and standard stop/slow paddles as required in Sections 1-07.8 and 1-10.3 of the *Standard Specifications*. Overuse of flaggers is not appropriate as "catch all" traffic control and should be discouraged. Safety of flaggers, through use of physical protection devices where practical, proper flagging methods and formulating an emergency escape plan, should be emphasized.

  The Contractor and the Project Engineer should establish communication with the Washington State Patrol (WSP) and local law enforcement agencies. Law enforcement advice about traffic control should be considered. Arrangements for all law enforcement agencies to notify the project office about accidents near, or in, the construction area should be established, if possible. If WSP traffic control assistance is to be used, a general discussion of strategy and responsibilities should be included.

  Off site hauling can pose a safety hazard to the public. WSDOT will cooperate with law enforcement agencies in the enforcement of legal load limit requirements and the covered load regulations. The Project Engineer should discuss this with the Contractor before any hauling begins.

- CONTROL OF MATERIALS

  The Contractor should be reminded of Section 1-06.1 of the *Standard Specifications*, requiring the Engineer's approval of all materials prior to their use. In order to expedite these approvals, the Contractor should be encouraged to make these requests as early as possible. The Project Engineer should provide the Contractor with a current copy of the Record of Materials (ROM) for the project. The Project Engineer should discuss the ROM with the Contractor, covering the various requirements for sampling, catalog cuts, shop drawings, certification requirements, etc., which may be needed for approval of materials prior to their use. The requirements of Section 1-06.2 of the *Standard Specifications* for ongoing acceptance of approved materials prior to their being incorporated into the work, should also be discussed. If fabricated items will be needed, the inspection process for fabricated materials, including shop drawing approvals and notification requirements for fabrication inspectors, should also be outlined. The requirements of Section 1-06.3 of the *Standard Specifications* that require manufacturer certifications prior to use of the materials should also be reviewed.

  The Contractor should be reminded that, in order to avoid deferred progress payments for work completed, all necessary documentation for approval of materials and required certifications must be received and accepted prior to their use.

- OTHER SUBMITTALS

  Discuss any other submittals that may be needed during the course of the contract. This may include Falsework and Forming Plans, Traffic Control Plans, Temporary Water Pollution/Erosion Control Plans, Schedules, Installation or Operating Procedures, or other Contractor initiated items requiring WSDOT review and/or approval. There are requirements for a number of submittals which, if not satisfied in a timely manner, could delay the initial progress payment. These include the Statement of Intent to Pay Prevailing Wages, the Progress Schedule, and the Training Plan. There may be others depending on the work to be done and as required by the contract provisions. The Project Engineer should identify and remind the Contractor of these requirements and the potential for deferred payments.

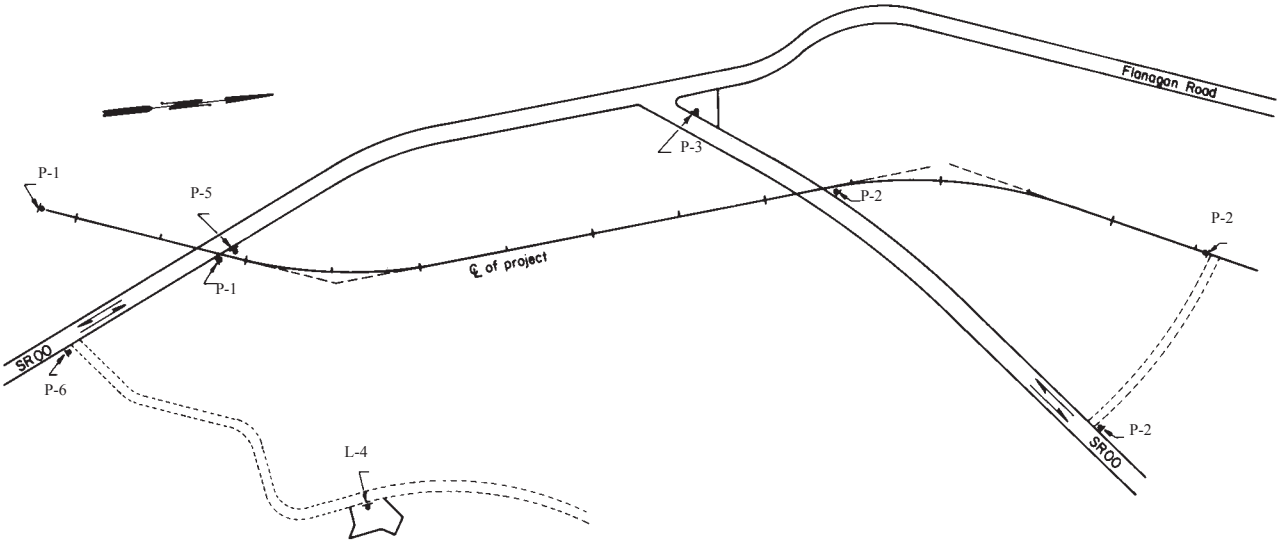

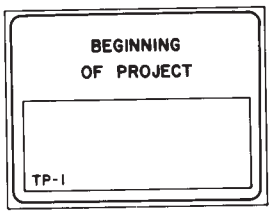

P-1

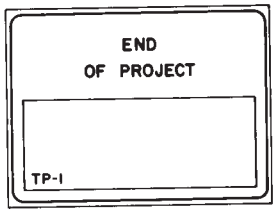

P-2

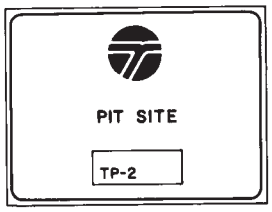

P-4

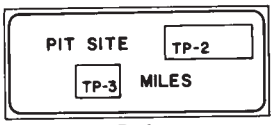

P-6

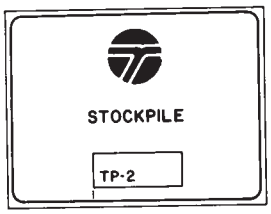

P-3

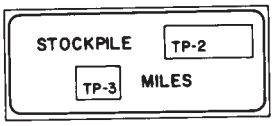

P-5

Notes:

This plan is typical. Any particular project should be signed to meet the physical conditions.

M6-1 Directional Arrow signs shall be installed as necessary.

See *Sign Fabrication Manual* for sign specifications.

Figure 1-3

- D/M/WBE PARTICIPATION / EEO / TRAINING

  The Project Engineer should briefly discuss and answer any questions the contractor may have with regard to the efforts, reports, and monitoring necessary to ensure successful performance for *D/M/WBE Participation, EEO, & Training*. Chapter 1-2.7A provides a breakdown of these various programs and the general requirements each contains. However, the specific requirements and contractor performance information are included in the *Standard Specifications for Road and Bridge Construction*, the Amendments included in the contract, as well as the contract specific special provisions titled *Equal Employment Opportunity Responsibilities*. If additional assistance or information is necessary, the Project Engineer could also request assistance from the Region EEO Officer, the State Office of Equal Opportunity, or the State Construction Engineer's Office.

- WAGE RATE ADMINISTRATION

  Advise the Contractor of the requirement to pay prevailing wage rates as identified in the Contract. Advise the Contractor that it is their responsibility to work directly with Washington State Department of Labor and Industries (L&I) for approval of the Statement of Intent to Pay Prevailing Wages (SI) and Affidavit of Wages Paid (AWP) and that:

  - The SI and AWP will be on forms provided by L&I.
  - The forms will be obtained from L&I or can be filed electronically with L&I online at www.LNI.wa.gov/prevailingwage.
  - The contractors, subcontractors, lower-tier subcontractors, suppliers, manufacturers, and fabricators that are required to submit SI and AWP will pay the approval fee directly to L&I.
  - The Contractor will provide the Project Engineer a copy of the approved forms (SI, before any payment can be made for the work performed and all AWP, before any retained percentage can be released). If payrolls are required, establish submittal deadlines in accordance with Section 1 07.9(5) of the *Standard Specifications*. Describe the wage rate interview process. Describe the required job site posters and provide them to the Contractor (See Chapter 1-2.6 of this manual). On all Federal-Aid contracts, the Project Engineer must remind the Contractor that the work falls under the guidance of Davis-Bacon and Related Acts and the Contract Work Hours and Safety Standards Acts. As indicated in Chapter 1-2.6C of this manual, the U.S. Department of Labor may conduct investigations to ensure compliance with these Acts.

- FORMS

  The Project Engineer should provide the Contractor a description of all required forms, giving the Contractor an initial supply of each. Additional forms required by the Contractor over the course of the work should be provided by the Project Engineer upon request of the Contractor. Remind the Contractor that all form submittals, including those of subcontractors, lower-tier subcontractors, and suppliers, should be routed through the Prime Contractor for submittal to WSDOT.

- SUMMARY

  While these issues are to be discussed with the Contractor in some manner at the beginning of each contract, the Project Engineer is free to select the most effective method of doing so. A formal preconstruction conference may or may not be the best solution. Perhaps a single meeting is adequate or several meetings may be required. The entire preconstruction communication may also be covered in a short meeting between the Project Engineer and the Contractor. The Project Engineer is responsible to address the information and inform the Contractor in some manner and maintain a written summary of the preconstruction meetings or discussions for the contract files.

  The Contractor and Project Engineer may be knowledgeable about those normal requirements listed above. In this situation, some items need only be listed in a mailing as a convenience to the Contractor's staff. Unique features, constructibility, and third party coordination should be focused on with as many of the interested parties as can be assembled.

  The key is effective communication, getting the right message to the necessary people. Additional meetings may be required as people change, as new facets of the work become imminent, or as the project goes into a second or third season. In order to assist this process, a checklist has been developed as a tool for the project office's use. It can be used to help identify the issues and track them for completion through the various preconstruction communications. See Figure 1-4.

1-2.2 Project Engineer's Relationship and Responsibilities

1-2.2A Assignment

The Region will appoint a Project Engineer to act as the authorized representative of the Secretary of Transportation for each contracted project. After the contract has been executed by WSDOT, the Region may provide the Contractor with written confirmation of the name and address of the Project Engineer assigned. (The Region may rely on the special provisions and forego this letter, unless a change is made.) If a letter is sent, the Contractor should be reminded to send all correspondence and forms regarding the project to the Project Engineer.

The Project Engineer is then responsible for enforcement of the contract specifications and provisions and the completion of all work according to the plans. The Project Engineer supervises the work of WSDOT personnel assigned to the project and ensures that they perform their work in accordance with the Plans, specifications and all applicable WSDOT policies. The Project Engineer is responsible for keeping complete and accurate records of all construction data and work progress, preparing progress and final estimates, and preparing other records necessary for a complete documentation of the project, including a performance evaluation of the Contractor (see Chapter 1 2.8F).

Changes made to the project or substitutions for work detailed in the contract plans or specifications, must be made in accordance with the requirements of Section 1-04 of the *Standard Specifications* and the guidance provided by Chapter 1-2.4C of the Construction Manual. The Project Engineer should review the project on a regular basis with the Regional Maintenance personnel so they have an opportunity to present any maintenance problems that may arise.

1-2.2B Responsibility as a Public Official

The Project Engineer is responsible for a project that is affected by Federal, State, Tribal, and local laws, ordinances, and regulations. While no one could be familiar with every requirement, the Project Engineer should seek to understand as much as possible. Beyond that, the prudent Project Engineer will look for guidance and seek information related to whatever current issue is at hand. Legal requirements could affect State employees, those employed by the Contractor in performing the work, the materials to be incorporated, the equipment that is used on the project, or could otherwise affect the conduct of work.

If the Project Engineer discovers that any provision of the contract, plans, or specifications appears to be inconsistent with a law, ordinance, or regulation, the inconsistency should be investigated and, if appropriate, referred to the Region Construction Manager. The Project Engineer should, at all times, strive to comply with all laws, ordinances, and regulations.

1-2.2C Relationship With the Contractor

The Project Engineer must be familiar with the conditions of the contract, special provisions, and specifications for the work. The Project Engineer must attend to any reasonable request of the Contractor, i.e., furnishing grades, stakes, plans, etc., whenever necessary and within reason. In general, the Project Engineer should do all things necessary to enable the Contractor to work to advantage and without delay. The Project Engineer should not set any stakes or furnish to the Contractor any plans which are the responsibility of the Contractor to set or provide. The Project Engineer must ensure that the Contractor performs the work in accordance with the contract provisions, plans, and specifications.

Integrity on the part of all employees is essential. The attitude of the Project Engineer and staff toward the Contractor and the Contractor's personnel should be one of cooperation, consistent with the requirements of the specifications. It should be recognized that both the State and the Contractor have explicit rights under the contract and that both parties must respect those rights. The Contractor is generally trying to fulfill the contract honestly, and errors or difficulties, which may arise are usually due to a lack of information or a misunderstanding. If conflict should occur, the Project Engineer should make every effort to determine the cause of the conflict and make appropriate corrections.

1-2.2D Relationship With Other Government Agencies

Other agencies responsible for such things as flood control, land development, stream navigation, pollution, etc., may be affected by the work. The Project Engineer should attempt to determine that the Contractor has complied with all regulations known to be in effect. The Project Engineer is encouraged to obtain a copy of commitments from the project design file. This should be available from a region or project design office. This file should contain environmental permits, real estate commitments, utility commitments, design deviations, and other good important information. When the Contractor is specifically required by the contract to obtain an approval document from other agencies, the Project Engineer must confirm that the document was received. Other approvals required of the contractor, but not mentioned in the contract documents should be confirmed to the extent that the requirements are known and the confirmation is possible. If a representative of an agency visits the project, the Project Engineer or an inspector should accompany the representative on the visit.

In carrying out construction work in forested areas, the Project Engineer should encourage the Contractor to comply with all Federal and State forest rules and regulations governing the protection of forests and the prosecution of the work within both national and State forests. The Contractor must take all precautions necessary to prevent and suppress forest fires. The Project Engineer shall report to the nearest forest fire warden at the earliest possible moment, the location and extent of any fire and shall take immediate steps to control the fire if practicable.

Construction work in or near streams, rivers, or other bodies of water may require a permit from the State Department of Fish and Wildlife. In an agreement with the agency, for each project requiring a Hydraulics Project Approval (HPA) (RCW 75.20.100), the State Department of Fish and Wildlife will issue the permit to WSDOT only and not to its contractor. One representative of the State Department of Fish and Wildlife will be assigned to coordinate requirements with the Project Engineer. The permit is specific to the work provided for in the contract itself and will not cover other work in support of the project, such as operations in Contractor staging areas, material sources, or waste sites. When a Hydraulics Project

Approval has been obtained for the project, and the permit has not been incorporated into the contract documents, the Project Engineer shall provide copies of the permit to the Contractor and ensure it is properly posted at the work site at all times work is in progress. The Project Engineer should ensure that both the intent and the specific provisions of the permit are rigidly enforced. If the Contractor's method of operations, weather conditions, design changes, or other factors affect waters of the State in ways not anticipated or represented in the Hydraulic Project Approval, the Project Engineer will work with the assigned representative and the Contractor to modify the existing permit or obtain a new or revised one as appropriate.

The U.S. Department of Labor, Mine Safety and Health Administration, Metal and Non-Metal Mine Health and Safety Division, 3633 136th Place SE, Suite No. 206, Bellevue, Washington 98006, (206) 553-7037, must be notified at the beginning and closing of all mining operations. This includes surface mining, such as our normal pit site operations. Notification is required for all crusher operations and for all pits and quarries, including borrow pits, which are separated from the roadway under construction. The Project Engineer is responsible for this notification for WSDOT furnished pits and must submit the required report as soon as the date of opening or closing can reasonably be determined. The Contractor is responsible for notification for all pits and quarries not furnished by WSDOT. The Bureau of Mines reports are in addition to reports required by the Department of Natural Resources.

Whenever construction work is performed in navigable waterways, it is necessary to obtain a construction permit from the Coast Guard. One of the requirements of the construction permit is regular submission of Bridge Construction Progress Reports. Two copies of the report should be prepared by the Project Engineer sufficiently in advance of the first working day of the month and transmitted to the State Bridge and Structures Engineer. When a Coast Guard permit modification is proposed (by the Contractor or WSDOT), it shall be submitted to the Bridge and Structures Engineer for processing through the Coast Guard. The time required for approval/disapproval of the proposed permit modification is variable and depends on the nature and significance of the modification. Up to six months may be required. When all construction obstructions to navigation have been removed, the Project Engineer shall report that fact immediately to the Bridge and Structures Engineer indicating the date removal was completed. Upon completion of all permitted bridge work, a final report indicating the date of completion and certifying that the bridge has been constructed in compliance with the Coast Guard Bridge Permit shall be submitted by the Project Engineer to the State Bridge and Structures Engineer.

1-2.2E Relationship With Public and Private Utilities

In some cases, utility adjustments will be completed prior to contract work. In other cases, adjustments are to be made concurrently with the work. The Project Engineer and the Contractor should contact public utility companies, individuals, and others owning or maintaining utility features within the limits of the highway right of way and confirm the relationship and the terms of the relocation agreements. Where the feature will require adjustment during construction, notice should be provided far enough in advance to allow the utility to perform the adjustment without affecting the Contractor's work schedule.

Utilities should have been given prints of the preliminary plans, prior to awarding of the contract, showing grade lines and right of way to enable them to prepare plans and estimates for making the necessary changes to their facilities in as timely a manner as possible. The Project Engineer should determine that plans for the work have been made, that the relocated facilities will be clear of the construction, and that the utilities coordinate with the Contractor's operations to the fullest extent possible.

When utilities are known to exist within the limits of the project and are not planned for relocation but may be affected by the Contractor's construction activities, the Project Engineer and the Contractor should become familiar with the requirements of RCW 19.122, Underground Utilities. The Project Engineer may wish to obtain copies of the RCW for review at Preconstruction Meetings.

The approximate locations of most existing underground utilities are shown on the contract plans. However, the existence of some underground utilities may not have been known or detected during design. If a one number locator service is available, the Contractor must utilize it in an attempt to locate all affected utility features. If no one number locator service is available, notice shall be provided individually to those owners of underground facilities known to have or suspected of having underground facilities within the area of proposed excavation. Even areas covered by a one number service may contain utilities not included in the service. If the Contractor discovers underground facilities which are not identified, the Contractor shall cease excavating in the vicinity of the facility and immediately notify the owner or operator of such facilities, or the one number locator service.

Preconstruction Communication Checklist
Contract Number: _____
Project Engineer:_____
Contractor:_____

Subject	Communication Type (Letter, Min. of Mtg., Info. Packet, Diary) Completed (Date)	File Location
A. Contractor-WSDOT Relationships	_____	_____
1. General Discussion	_____	_____
2. Contractor Performance Ratings	_____	_____
B. Environmental Commitments	_____	_____
1. Commitment Files	_____	_____
2. Contract Provisions	_____	_____
3. Rock Crushers	_____	_____
C. Order of Work and Schedules	_____	_____
1. Discuss Plans for Prosecution	_____	_____
2. Formal Schedule Required	_____	_____
D. Subcontractors and Lower Tier Subs	_____	_____
1. General Discussion	_____	_____
2. Condition of Award	_____	_____
3. Paperwork Process	_____	_____
4. WSDOT/Prime/Sub Relationship	_____	_____
5. Correspondence through Prime	_____	_____
6. Prime represented on site	_____	_____
7. WSDOT will address sub concerns	_____	_____
E. Utilities, Railroads, and Other Third Parties	_____	_____
1. Existing Agreements described	_____	_____
2. Commitments, Obligations, Notices	_____	_____
3. Underground Locater Service	_____	_____
4. Insurance requirements	_____	_____
F. Safety and Traffic Control	_____	_____
1. Discuss Contractor's Safety Program	_____	_____
2. Traffic Control Requirements	_____	_____
3. Police Relationships	_____	_____
4. Job-Specific Safety Concerns	_____	_____
5. Off-site Hauling Restrictions	_____	_____
G. Control of Materials	_____	_____
1. Source Approvals Needed	_____	_____
2. Acceptance Procedures	_____	_____
3. Fabricated Items	_____	_____
4. Installation without Certifications	_____	_____
H. Other Submittals	_____	_____
1. Job-Specific List and Discussion	_____	_____
2. Delay of 1st Progress Payment	_____	_____
I. Equal Employment Opportunity and Training	_____	_____
1. Contract EEO Requirements	_____	_____
2. Contract Training Requirements	_____	_____
3. Training Plan/Trainee Appr. Process	_____	_____
4. Monitoring and Reporting	_____	_____
J. Wage Rate Administration	_____	_____
1. Prevailing Rates Required	_____	_____
2. Payrolls, Wage Rate Interviews	_____	_____
3. Davis-Bacon investigations	_____	_____
K. Forms	_____	_____
1. Describe Req. Forms, Provide Supply	_____	_____

1-2.2F Responsibility for Coordination of Railroad Agreements

When railroads are involved within the project limits, an agreement covering the work involved is usually entered into between WSDOT and the Railroad Company. Upon identifying that the contract involves work or involvement by a railroad, the Project Engineer should immediately obtain a copy of the Railroad Agreement or contact the Region Utilities Engineer to determine the status of the agreement and to make sure it contains all elements needed to accommodate the construction of the project. If an agreement has not been made with the railroad, the Project Engineer should coordinate and monitor the development and processing of the agreement through the Region Construction and Region Utilities Engineers. Where notices are required. The Project Engineer should ensure that proper notice is provided to the railroad company and that such notice is acknowledged by them. The Project Engineer should work with the Region Construction and Region Utilities Engineers to resolve any conflicts with the Railroad Company and prevent delays to the Contractor's operations.

1-2.2G Responsibility for Railroad Encroachment Insurance

Projects which include work on railroad right of way generally require special insurance protection. Pay particular attention to the Contract Special Provisions for project requirements because they vary from project to project. It is the responsibility of the Project Engineer to enforce the provisions. The required insurance documents are to be furnished by the Contractor (usually through the Project Engineer) to the State Accounting Services Office who will (a) review the documents and (b) obtain approval of the insuring documents from the railroad company. Written notification of approval by the railroad company will be furnished to the Project Engineer by the State Accounting Services Office as soon as approval is obtained.

No work shall be started on railroad property until the necessary approvals have been obtained. The railroad insurance must be maintained until the date of physical completion of the project unless otherwise stated. However, the Contractor may make a written request to be relieved of the responsibility to continue all or part of the railroad protective liability insurance before the completion date under certain conditions. The details and conditions for this relief are specifically set forth in the special provisions of the contract. If the Contractor should make a request for relief, the Project Engineer should contact the Region Construction Manager and Utilities Engineer for guidance and assistance in coordinating this effort with the railroad.

1-2.2H Responsibility for Coordinating Work With Other Contracts

When two or more Contractors are working in the same area, Section 1-05.14 of the *Standard Specifications* will apply. The Contractor shall not cause any unnecessary delay or hindrance to the other contractors on the work, but shall cooperate with other contractors to the fullest extent. Progress schedules and plans for all contractors involved should be reviewed by the Project Engineer to detect possible conflicts which might be resolved before a delay of work is experienced or extra costs are incurred as a result. If an adjacent project requiring coordination is known prior to holding a Pre-Construction meeting, it would be beneficial to invite principals from that project to the meeting.

1-2.2I Responsibility for Enforcement of Safety and Health Requirements

1-2.2I(1) General

All contractors doing work for WSDOT must provide safety controls for the protection of life and health of the Contractor's employees and other persons, for the prevention of property damage, and for the avoidance of interruptions in the performance of the work under the contract. As the owner contracting agency, WSDOT has the responsibility for enforcement of the provisions of the contract, however, provisions and regulations which are by law the fundamental responsibility of other agencies, both from the standpoint of interpretation and enforcement, should be monitored by WSDOT, but with full recognition as to the responsibilities and authorities of those agencies. The Project Engineer will cooperate fully with the responsible agency.

Any violations noticed by the Project Engineer will be brought to the attention of the Contractor for correction. The Project Engineer will also notify the responsible agency (if that action is deemed necessary by the Region Construction Manager) and utilize such sanctions as are consistent with contract terms in assisting the responsible agency in enforcing laws, rules, and regulations.

The Contractor is obligated by law to comply with both State and Federal safety regulations. State regulations are administered by the Washington State Department of Labor and Industries under the Washington Industrial Safety and Health Act (WISHA). Federal regulations are administered by the Occupational Safety and Health Administration (OSHA) and the Mine Safety and Health Administration (MSHA) of the U.S. Department of Labor, which has jurisdiction over Federal safety requirements for pit and quarry operations up to the point where materials leave the quarry area or go into a batch plant. Inspectors from any or all of these agencies may review the Contractor's operations at any time. (See Section 1-07.1 of the *Standard Specifications*.) In order to fulfill WSDOT obligations to monitor contract operations in accordance with the above, the following procedures should be followed on both Federal-aid and non Federal-aid contracts.

1-2.2I(2) Precontract Preparation

- The Project Engineer shall obtain the WISHA manuals, particularly Safety Standards for Construction Work WAC 296-155, General Safety and Health Standards WAC 296-24, and General Occupational Health Standards WAC 296-62, and shall review them with the key field WSDOT inspectors to ensure reasonable familiarity to the extent that they can recognize important requirements.
- The Contract Plans and contract provisions should be reviewed to identify those aspects of the work meriting special attention from the standpoint of potentially dangerous types of work and hazard elimination.

1-2.2I(3) Preconstruction Duties

As part of the Preconstruction Meetings and Discussions (see Chapter 1-2.1C), the Contractor's safety program should be discussed. Some of the things that the Project Engineer may want to consider are:

- The contractual obligation of the Contractor for complying with State and Federal construction safety standards. (See Section 1-07.1 of the *Standard Specifications*.)
- The availability of the safety standards that apply to the contract.
- The accident prevention program of the Contractor — organization, staff, names of responsible individuals, meetings, training, reports, etc. A review of specific areas for which plans are required (especially those also affecting WSDOT personnel). These might include Fall Protection, Confined Spaces, Respirators, Hearing, and Hazardous Materials plans. Implementing a mechanism for employees to report "near misses" and/or work zone accidents.
- The Contractor's responsibility for seeing that subcontractors comply with safety regulations.
- The Contractor's plans for meeting specific safety requirements and for eliminating potentially critical hazards on the project.

1-2.2I(4) The P.E.'s Role in Safety on the Project

It is difficult to generalize about safety. It's a judgment call which is dependent on risk, knowledge, authority to direct corrections, etc. As people, professionals and representatives of the State, Project Engineers have an obligation to take action if they become aware of a situation that presents an immediate threat. Project Engineers should advise their employees on what the lines of communication are and what the procedures are for alerting the responsible agencies with regard to serious safety hazards.

Employees should be made aware that the Contractor is obligated to make the work-site safe, to their satisfaction, for inspection activities. Anyone who is uncomfortable with access for inspection should inform their supervisor of the situation and expect resolution. Project personnel should also be made aware of project specific hazards and be trained in specific areas as the project warrants. For example; fall protection, confined space requirements, respirator training, lead paint hazards, hazardous material training, and exposure to medical waste (sharps). It is suggested that the expertise of the Regional Safety Officers or Headquarters Safety Office be utilized as appropriate.

Additional information, such as safety regulations and Department of Labor and Industry (L&I) contacts, are available on the Internet at *http://www.wa.gov/lni/*. Keep in mind that many WSDOT employees are not trained to interpret and apply safety regulations, however, employees need to have a reasonable understanding of what hazards may be encountered on a project. Many, but not all, of the requirements are listed under Chapter 296-155 WAC, "SAFETY STANDARDS FOR CONSTRUCTION WORK" under the various "Parts A through V".

State L&I offers consultation service (advise is given) and enforcement (assessment of a violation would result in a citation being issued). A listing of phone numbers for the various L&I field offices is as follows:

- REGION 1 Offices
  - Bellingham Field Services Location 360 647-7300
  - Everett Field Services Location 425 290-1300
  - Mount Vernon Field Services Location 360 416-3000
- REGION 2 Offices
  - Bellevue Field Services Location 425 990-1400
  - Seattle Field Services Location 206 281-5400
  - Tukwila Field Services Location 206 248-8240
- REGION 3 Offices
  - Bremerton Field Services Location 360 415-4000
  - Port Angeles Field Services Location 360 417-2700
  - Tacoma Field Services Location 253 596-3800
- REGION 4 Offices
  - Aberdeen Field Services Location 360 533-8200
  - Longview Field Services Location 360 575-6900
  - Tumwater Field Services Location 360 902-5799
  - Vancouver Field Services Location 360 896-2300
- REGION 5 Offices
  - East Wenatchee Field Services Location 509 886-6500
  - Kennewick Field Services Location 509 735-0100
  - Moses Lake Field Services Location 509 764-6900
  - Okanogan Field Services Location 509 826-7345
  - Walla Walla Field Services Location 509 527-4437
  - Yakima Field Services Location 509 454-3700
- REGION 6 Offices
  - Colville Field Services Location 509 684-7417
  - Pullman Field Services Location 509 334-5296
  - Spokane Field Services Location 509 324-2600

1-2.2I(5) Pedestrian Safety

When the work area encroaches upon a sidewalk, crosswalk, or other areas that are near an area utilized by pedestrians or bicyclists, special consideration should be given to their accommodation and safety. Pedestrians are more susceptible to personal injury in work areas than are motorists. Visibility and recognition of hazards is an important requirement for the safety of pedestrians and bicyclists.

Protective barricades, fencing, handrails, and bridges, together with warning and guidance devices, should be used so that pathways for pedestrians, bicyclists, equestrians, and other non-motorists are safe and well defined. Where walks are closed by construction or maintenance, an alternate walkway should be provided where feasible. Where it is necessary to divert pedestrians into the parking lane of a street, barricades and delineation should be provided to separate the pedestrian walkway from the adjacent traffic lane. Pedestrians should not be diverted into a portion of the street used by vehicular traffic. At locations where adjacent alternate walkways cannot be provided, pedestrians can be diverted across the street by placing appropriate signs at the construction limits and at the nearest crosswalk or intersection. When hazardous work conditions exist overhead, it may be necessary to install a fixed pedestrian walkway of the fence or canopy type to protect and control pedestrians. In such cases, wood and chain link fencing can be used with warning lights and illumination to warn and guide both pedestrians and motorists. These accommodations for pedestrians and bicycles should be included in Traffic Control Plans.

Fences around a construction area are often necessary and may be a requirement of the local jurisdiction building code. They are often constructed in conjunction with a special pedestrian walkway or when there are deep excavations or when pedestrian access to the job site is not desirable. Installation of such fencing must take into account relocation of existing control devices and facilities such as traffic signals, pedestrian signals, traffic signs, and parking meters. The use of chain link fencing which can be seen through may be needed at intersections to provide adequate sight distance.

Relocating a walkway without unreasonable inconvenience to pedestrians, residents, or commercial interest, is the safest practice of all. Remember, however, that pedestrians like to "see what's going on". Simply denying them access does not, of itself, prevent their encroachment onto the worksite. Sometimes it is advisable to design and construct a pedestrian observation area for this purpose.

1-2.2J Responsibility for Environmental Considerations

During the precontract period, the Project Engineer should obtain copies of the final Environmental Impact Statement and any special environmental studies related to the project. It is important that all key personnel become familiar with the environmental decisions considered during the design process. The contract documents should include necessary provisions for protection of the environment, including requirements that the Contractor secure permits from and abide by regulations of appropriate Federal, State, and local agencies. Any changes in contract work that may become necessary must also be reviewed to ensure conformance with the original intent, requirements, and commitments established during the environmental design of the project.

1-2.2K Responsibility for Environmental Compliance During Construction

The following procedure is included in its entirety as required by WSDOT Instructional Letter IL 4055.00. The procedure pertains to WSDOT personnel on all WSDOT contracts and contains duties and activities by persons other than the project staff, but all of which are related to construction contracts and affect the Project Engineer to one degree or another. The Instructional Letter will expire on March 10, 2004, but will likely be extended. The Project Engineer must stay aware of the current status of this procedure and any changes that might have been made. Such changes will supersede the text in this Manual and must be followed as written.

1-2.2K(1) Environmental Compliance Assurance Procedure

The purpose of the Environmental Compliance Assurance procedure is to recognize and eliminate environmental violations during the construction phase on Washington State Department of Transportation (WSDOT) construction sites, and to ensure prompt notification to WSDOT management and agencies. For purposes of this procedure, violations are defined as actions that are not in compliance with environmental standards, permits, or laws.

When any action (Notification Trigger) below occurs or if there are questions about compliance, the Project Engineer (PE) shall initiate this procedure to develop corrective actions to solve the identified problem. The Regional Environmental Manager (REM) will serve as a resource to the PE and give priority to addressing the actions, activities, or situations that stem from notification triggers. The PE and REM will work together on an appropriate response to the notification trigger to avoid or minimize environmental damage.

A. Notification Triggers: "Notification Triggers" (listed below) means an action, activity, or situation that requires the Project Engineer to implement the Environmental Compliance Assurance Procedure.

1. Notice from a resource agency that a violation has occurred;

2. Any action that, in the judgment of the REM, contractor or Project Engineer, may violate environmental permit conditions, agreements, or approvals for the project; or other environmental laws, ordinances, or regulations;

3. Any unauthorized work, activity, or fill in wetlands, shorelines, creek beds (including dry channels), other waters of the state, or critical habitat;

4. Any emergency protection activity that involves unauthorized placement of fill in wetlands, shorelines, creek beds (including dry channels) or waters of the state or for bank stabilization activities where fill or structures are placed on the bank;

5. Any action or project revision requested by an agency after a site inspection that may be in conflict with other permits;

6. Any spill, discharge or release of hazardous materials, oil, or chemicals to land or water;

7. Any situation that results in a fish kill, or if dead or dying fish are discovered in the vicinity of the project;

8. Activities that monitoring shows are out of compliance.

B. Notification and Resolution Process: In the event of a notification trigger, the following steps shall be taken:

1. If a notification trigger is observed first by the contractor or REM, the contractor or REM shall immediately notify the Project Engineer.

2. The Project Engineer must:

Step 1. Immediately notify the Contractor of the situation, implement emergency response procedures including agency notification, and suspend all non-conforming work on the site.

Step 2. Immediately notify the Regional Environmental Manager (REM). Consultation with the REM must occur before any remediation actions are taken.

Step 3. In consultation with REM assemble the following information

a. The activities that triggered the notification and why they occurred.

b. Location of the work.

c. Potential solutions to the problem, or if additional investigation is needed, the agreed upon course of action.

d. Any related site constraints or safety issues.

e. Urgency of the issue

Step 4. Notify his or her immediate supervisor.

Step 5. *Notify the Regional Administrator.

Step 6. In consultation with the REM, determine the resource agencies having jurisdiction and who will notify them.

Step 7. Document all actions, conversations and activities.

3. The Regional Environmental Manager must immediately:

Step 1 *Notify the Director of Environmental Services.

Step 2. Notify his or her immediate supervisor.

Step 3. Work with the Project Engineer to resolve the issue that caused the notification trigger.

Step 4. Identify and obtain appropriate permits or permit revisions with the aid of the Project Engineer.

Step 5. Document all actions, conversations, and activities. Communicate issues and send appropriate documentation to Regulatory and/or Resource Agencies.

4. *The Director of Environmental Services must immediately:

Step 1. Notify Regulatory Compliance Program Manager and any other EAO Program Managers associated with the resource issue.

Step 2. Notify Director of Environmental & Engineering Programs.

Step 3. Notify the Regional Environmental Manager that the Director of Environmental & Engineering Programs has been contacted. Regional Environmental Manager must then notify the Project Engineer that the violation reporting procedure has been completed.

5. *The Regional Administrator will:

Step 1. Coordinate with the Director of Environmental & Engineering Programs to contact the Assistant Secretary of Engineering and Regional Operations advising him or her of the situation, and provide updates as needed on the situation.

Step 2. Ensure that the Project Engineer and the Regional Environmental Manager have the necessary resources, authority and organizational support to successfully resolve the environmental problem.

C. Timing: Due to costs of project delays, or risk of not acting quickly during emergency situations, the REM shall provide a 24 hour contact person for environmental consultation.

D. Documentation:

1. The Project Engineer shall document the details of the notification and problem resolution in the contract records.

2. The Regional Environmental Manager shall document the details of the notification process and problem resolution in a central data base to be used to report, as may be required by an Environmental Management System, on agency compliance with environmental regulations.

3. *For violations, the appropriate documentation needed to record the violation, and achieve resolution, including any preliminary mitigation solutions, will be collectively developed by the Project Engineer and the Regional Environmental Manager, and shall be coordinated with and sent to the appropriate regulatory and/or resource agency.

E. Roles and Responsibilities:

1. "Project Engineer" is the person responsible for the project and administration of the construction contract. This responsibility may be delegated to a subordinate employee on site, but the ultimate responsibility for making sure these procedures are followed will be with the Project Engineer. The Project Engineer shall have a thorough knowledge of all of the environmental permit conditions and design requirements for the project, and have such certifications and other qualifications as may be required.

2. "Regional Environmental Manager" is the person responsible for administering the regional environmental program. This responsibility may be delegated to a subordinate employee with knowledge of environmental permitting and procedures, but the ultimate responsibility for setting and interpreting regional environmental policy will be with the Regional Environmental Manager.

3. "Contractor" is as defined in Section 1-01.3 of the Standard Specifications for Road, Bridge, and Municipal Construction (2002).

1-2.2L Responsibility for Posting Required FHWA and State Labor and Industries Job Site Posters

A combination of both State and Federal laws require that on all WSDOT administered contracts some or all of the posters listed below are to be posted at the place of employment such that all employees haveready and free access to inspect their contents. The Project Engineer must ensure the Contractor complies with these requirements.

- FHWA 1495 and 1495A — Wage Rate Information
- FHWA 1022 — Fraud Notice Poster
- OFCCP-1420 — Equal Employment Opportunity is the Law
- WISHA P416-081-000 — Job Safety and Health Protection
- P242-191-000 — Notice to Employees (L&I)
- F700-074-000 — Your Rights as a Worker
- EMS 9874 — Notice to Employees (Emp. Security)
- Copy of approved Statement of Intent to Pay Prevailing Wages
- Copy of prevailing wage rates from the contract provisions

If Federal funds are involved, all of these posters are required. If only State funds are involved, the first three do not apply. After contract execution and before work begins, the Contractor should be given a package containing the appropriate required job site posters. This package should also be accompanied by either a written or verbal explanation of the contents and include notification that the Contractor, each subcontractor, and each lower-tier subcontractor will have to post a copy of the State L&I approved Statement of Intent to Pay Prevailing wages. This action shall be specifically noted in the project records.

1-2.2M Responsibilities When Working on Tribal Lands

Indian nations have the political distinction of being sovereign. This is different from being designated as having protected group status based on racial classifications. Being sovereign, tribes have the ability to create and enforce tribal ordinances such as Tribal Employment Rights Ordinances (TERO). These are legal requirements pertaining to work within the boundaries of the reservation which are enforced by the respective tribes. When a contract includes work on a reservation, the project should include a general special provision "Indian Preference and Tribal Ordinances" that alerts the contractor to the possibility that TERO requirements may apply and provides a contact person for the tribe. The provision also reminds the contractor to bid any costs associated with TERO compliance into associated items of work. TERO requirements may take a variety of forms, some of which are listed in the noted provision. The provision also notes that complying with TERO requirements shall not be a violation of the contract equal employment opportunity requirements. The end result is that the contractor is expected to comply with TERO requirements as they would any other legal obligations. The underlying intent is to reduce Indian unemployment and most tribes are willing to work with contractors to best meet this goal. We want to avoid creating any contractual requirements that interfere with their ability to do so. Our role is to assist in communication but not become involved in determining or paying the tax.

1-2.3 Construction Traffic Control

1-2.3A Public Convenience and Safety

Under the many special conditions encountered where traffic must be moved through or around construction operations, serious problems of traffic control can occur. Most conditions are temporary and are, therefore, dangerous and difficult to deal with because they are unexpected and not in accordance with the normal pattern of highway traffic. Section 1-07.23(1) of the *Standard Specifications* requires the Contractor to conduct all operations with the least possible obstruction and inconvenience to the public and

to provide adequate safeguards, safety devices, protective equipment, and any other needed actions to protect the life, health, safety, and property of the public. The responsibility to comply with these requirements is the Contractor's. It is the Project Engineer's responsibility to ensure that the Contractor complies.

1-2.3B Public Information and Customer Focus

Most drivers still have the expectation of proceeding to their destination with little or no delay even though traffic conditions on many of our highways are deteriorating, primarily due to increased traffic volume. This increased volume may create congestion, delays, accidents and aggressive driving during normal daily operation. Highway construction will usually require a more restricted roadway to accommodate work zones and can further reduce traffic mobility and safety. Even some of our lower volume rural highways can present a challenge due to factors such as drivers not expecting construction work and seasonal/recreational traffic increases. Construction and user delays present significant costs in addition to costs associated with crashes and worker safety. These delays and costs can be minimized by implementing a traffic control strategy based on traffic conditions and construction requirements, and which includes public information and customer focus considerations.

Our goal on every highway construction project should be to provide the best overall balance of work zone safety and traffic mobility while constructing quality highway projects. Much of our effort is directed at engineering responses to safety and mobility issues and is generally included in the contract requirements. Recent customer focused highway construction studies have shown that accurate and timely project information is a valuable element in an overall traffic control strategy. Advance planning and coordination between the project engineer and contractor is necessary to ensure that there is an opportunity to provide public information for all phases of the project that impact traffic. Proper use of public information and customer focused techniques will provide safety and mobility benefits that would not otherwise be gained, as listed below:

- Alert drivers to potential delays by advance notice through project signing and the news media that would allow drivers to take alternate routes, adjust scheduled trips and have better awareness of traffic impacts and how to avoid them.
- Provide benefits to the Contractor from reduced traffic volume and better driver awareness through fewer crashes, less material delivery delay, better worker safety, fewer complaints and overall public acceptance of the project.
- Achieve better driver acceptance, reduced aggressive driving and improved work zone credibility by minimizing delays and providing accurate and timely information.
- Consider innovative construction techniques and shorter term intense work stages with more severe traffic restrictions, such as weekend closures, if possible.
- Closely monitor traffic conditions when traffic is restricted to determine the need for any traffic control or work hour adjustments that would improve traffic flow. Specified working hours and the accompanying traffic restrictions are critical elements of the project traffic control strategy and should not be adjusted without proper traffic analysis.
- Maintain ongoing communication during the life of the project with local law enforcement, emergency services, local agencies, transit groups, affected local businesses, etc.
- Continue use of innovative devices such as portable, changeable message signs, project information signs with information phone number and highway advisory radio systems.

The Regional Construction Manager, Traffic Engineer, and Public Information Officer should be involved in the project traffic control strategy and may be able to offer assistance.

1-2.3C Work Zone Traffic Control

1-2.3C(1) General

The primary function of work zone traffic control is to move vehicles and pedestrians safely through or around work zones while protecting on-site workers and accommodating the Contractor's construction operations.

The "General" requirements for traffic control (Section 1 10.1 of the *Standard Specifications*) address the responsibility to provide adequate traffic control measures at work zones as follows:

- No work shall be done until all necessary signs and traffic control devices are in place and/or conflicting and confusing signs are covered.
- If the Contractor does not provide necessary traffic control, WSDOT may do it and deduct the cost from the Contractor's payments.
- The Contractor is responsible regardless of whether or not WSDOT orders, furnishes, or pays for necessary traffic control.

It is important for the Project Engineer to ensure that all necessary signs and other traffic control devices are properly placed at all times so that the traveling public is made aware of all deviations from the normal traffic conditions and is furnished adequate direction and guidance to permit safe travel through the construction area.

1-2.3C(2) Traffic Control Management

"Traffic Control Management" (Section 1-10.2 of the *Standard Specifications*) addresses the requirements and duties of the Contractor's designated Traffic Control Manager (TCM) and Traffic Control Supervisor (TCS). The Contractor has the responsibility for managing

traffic control and providing safe traffic control measures that are appropriate for the type of work and consistent with the requirements of the contract plans and specifications. The Contractor's traffic control work is a contract item. Just like all other contract items, it must be inspected for adequacy and conformance with the contract. Once it is performed and inspected, it must be paid for. Actions taken by the TCM have a direct impact on the Contractor's and subcontractors' work operations. The process for coordinating and approving those actions must be well defined and consistent with the contract requirements.

The TCM and TCS work together with the Project Engineer and WSDOT's traffic control contact person to address traffic control issues as the work progresses. Planning and coordination of the Contractor's work efforts with appropriate traffic control measures are the primary responsibilities of the TCM. It is also the responsibility of the TCM to ensure that any Contractor proposed Traffic Control Plans (TCPs) needed to implement the Contractor's work operations are approved in advance and the necessary resources to implement the TCP are available. The TCS ensures that the traffic control measures shown on the approved TCPs are properly implemented, operating, and documented on the project. The Contractor's TCS may not be required full time on the project, but is required to perform all the duties required by the specifications. When the Contractor is working multiple shifts, it may be necessary to have more than one person assigned as a TCS.

In addition to the Contractor's responsibility to designate a Traffic Control Supervisor, WSDOT may designate a DOT employee who is qualified, but not necessarily certified, to serve as the State's traffic control contact. It is intended to have qualified, trained representatives from both the Contractor and WSDOT work together to achieve safe traffic control operations on the project.

Among the duties of the Project Engineer in the area of Traffic Control are the following:

- Communication: About the planned work, traffic control needed and adjustments to the approved Traffic Control Plan. During the work, to stay aware of changes, events and issues.
- Monitoring: The activities of the Contractor TCS and traffic control workers. The status of signs and control devices. Conformance with specifications and requirements.
- Documentation: Obtaining and reviewing daily reports. Handling Traffic Control Plans and their approvals.
- Coordination: With adjacent projects, with DOT Traffic offices, notices to the media.

The Project Engineer may assign these duties in any manner. It would make sense to include the State's TCS in these activities.

When reference is made to the "Traffic Control Supervisor (TCS) in this manual or in the *Standard Specifications*, it shall mean the Contractor's Traffic Control Supervisor unless stated otherwise.

1-2.3C(3) One-Way Piloted Traffic Control Through Construction Zones

The major points to note in Section 1-10.3(6) of the *Standard Specifications* are:

- The provision does not limit one-way piloting to treated bases, surface treatments, and pavements. Piloting can be used in other operations, such as grading, when appropriate;
- The "pilot car control area" is any one area or section of the project controlled by pilot car operations. There can be more than one area or section and there can be more than one pilot car and driver in each area or section, however, each "pilot car control area" will be addressed separately, accumulating the total hourly payment on the contract;
- When the contract does not stipulate a pilot car operation (i.e., bid proposal does not include such an item,) a new item can be established by change order if the Engineer deems that method of traffic control to be most appropriate; and
- Regardless of any flagging or piloting services furnished by WSDOT, responsibility for protection of the work and traffic remains with the Contractor.
- A careful appraisal of the pilot car operation may indicate the need for adjustments in work zone length or other features that may be contributing to congestion. The Contractor's work operation should generally be restricted to one side of the roadway and not interrupt the alternating traffic movement.

1-2.3C(4) Construction and Maintenance of Detours

Construction zone detours will normally be detailed in the plans. When detours not shown in the plans are required, the design will likely be done by the construction office under the direction of the Project Engineer and requirements of the MUTCD. If the detour is a full-fledged roadway, design and traffic reviewers should check the design. Short-term minor detours may be installed and operated without formal review, but the Project Engineer must be satisfied that the facility is suitable and safe for traffic use.

Existing pavement markings on asphalt pavement should never be merely blacked out with oil or paint. Rather, the striped and adjacent areas should be sandblasted or ground in a pattern different from the original marking until the marking is no longer visible. This change in pattern minimizes the possibility that the original marking will still be visible to drivers, especially at night or in rainy weather when covered over stripes have a tendency to shine in contrast to the pavement. Temporary pavement marking tape, either for temporary lane marking or masking of existing markings may offer another option.

Barricades and barriers are inherently fixed object hazards. Therefore, they should not be used unless the combined hazard for the motorist and the workers of operating without barriers is greater than the hazard of striking the barriers themselves. They should not be used as primary delineation to guide traffic. Delineation devices must be maintained, and kept clean. When delineators become covered with grime or are damaged, they become ineffective. The condition and positioning of these devices should be checked daily.

1-2.3C(5) Road/Ramp Closures

When it is necessary to close a road, street, or ramp, the Project Engineer shall submit a request that includes the appropriate closure/detour plan to the Region Traffic Engineer in advance of the need. Per RCW 47.48.010, the Regional Administrator may close a road, street, or ramp.

With proper planning and implementation, road/ramp closures can be an effective and safe method of traffic control. As required by RCW, notice of the closure shall be published in one issue of a newspaper in the area in which the closure is to take place. Signs indicating dates and times of the closure shall be placed at each end of the section to be closed on or before publishing the notice in the newspaper. Publishing the notice and placing of the signs shall be a minimum of three days in advance of the closure. Advance notice using local radio, portable changeable message signs or HAR may be effective in diverting traffic from the closed or impacted locations.

Coordinate with the Region Public Information Officer for assistance with public notification.

In cases of emergency, or closures of 12 hours or less, the road, street, or ramp may be closed without prior notice to the public. If possible, a notice should be posted one working day in advance of the closure.

1-2.3C(6) Traffic Control Plans

"Traffic Control Plans" (Section 1-10.2(2) of the *Standard Specifications*) addresses the requirements of Traffic Control Plans (TCP). The Contractor, working in coordination with the TCM, must adopt the TCPs appearing in the contract or propose modified TCPs to be used for the project. The Contractor must submit proposed modifications to TCP's at least ten calendar days in advance of the time the signs and other traffic control devices will be required. Approval of these plans must be obtained before the work can begin.

Minor modifications to the TCP may be made by the Traffic Control Supervisor to accommodate site conditions. Modifications or adjustments to the plan must maintain the original intent of the plan. When there is a change in the intent and/or substantial revisions are needed, a revised TCP shall be submitted for approval through the TCM to the Project Engineer. The Regional Traffic Office should be consulted when this situation occurs.

Traffic Plans should not only address all work zones and standard devices and signs but should also address issues such as:

- conflicting or temporary pavement markings
- maintaining existing operational signs and covering conflicting signs
- staging requirements
- temporary vertical or lateral clearance restrictions
- temporary work zone illumination
- consistency with any work hour restrictions
- position of positive barriers for traffic hazards or worker protection
- vertical drop-offs
- work zone access
- intersection or access control (traffic signals, road approaches)
- pedestrians and bicycles

If the Contractor's method of operation or the work area conditions require other than minor modification of the specific TCP appearing in the contract or any of the TCP's previously designated and adopted by the Contractor, the Contractor shall submit through the TCM a proposed modification of the TCP for approval. If the Contractor's proposed modifications comply with the MUTCD requirements and is consistent with contract requirements as well as State and Region policy, the Project Engineer may approve these proposed modifications. If the Contractor's proposed modifications do not comply with the MUTCD requirements, the Project Engineer should consult with the Region Traffic Engineer.

If there is any doubt that the proposed TCP complies with the MUTCD or provides for the safe movement of traffic, the Project Engineer shall consult with the Region Traffic Engineer or the Region Construction Manager.

1-2.3C(7) Conformance to Established Standards

Conformance to Established Standards (Section 1-10.2(3)) addresses the requirements for standards and condition of flagging, signs, and all other traffic control devices. In addition to standards established in the latest adopted edition of the *"Manual on Uniform Traffic Control Devices"* (MUTCD) and/or as specified in the contract plans, the "National Cooperative Highway Research Project, 350" (NCHRP 350) has developed requirements for safety of four categories of traffic control devices. Category 1 devices consist of small lightweight devices that generally do not present a hazard. Typical Category 1 devices are cones, tubular markers, and plastic drums with no attachments. Conformance to NCHRP 350 for Category 1 is described in Section 1-10.2(3) and applies only to those devices purchased by the Contractor after January 1, 2000. The Contractor is required to keep the manufacturer's certification document on file and available for inspection if needed. Inspection of certification documents by WSDOT is not routinely required but should be considered if operational or safety issues are observed.

Category 2 contains devices that are more hazardous due to their rigid construction, such as barricades, portable sign stands, intrusion alarms, and drums with lights. Implementation of requirements for Category 2 devices is presently planned for Fall of 2000.

Category 3 devices are fixed or substantial in mass and could cause significant damage to a vehicle or its occupants. Devices such as barriers, fixed sign supports, and TMAs are included in this category. WSDOT approved devices in this category currently meet NCHRP 350 standards.

Category 4 devices are typically trailer or truck mounted and could cause significant damage if impacted by an errant vehicle. Devices such as arrow boards, PCMS, portable signals, and portable lighting units are included in this category. Implementation of requirements for Category 4 devices is not presently scheduled.

1-2.3C(8) Construction Signs

Construction Signs (Section 1-10.3(3) of the *Standard Specifications*) divides construction signs into two categories, Class A and Class B, and lists the work required for the Contractor. A specific pay item is provided for the Class A signs. The only payment for Class B signs is for the labor utilized for daily set up and removal.

The Project Engineer will arrange to furnish all necessary standard signs and see that they are erected and maintained in proper condition during the period of need. Before providing the Contractor with State furnished signs, the Project Engineer should reject any signs which are unacceptable as determined by the ATSSA Quality Standards for Work Zone Traffic Control Devices. Inform the Regional Stores

Manager of the unacceptable signs upon rejection in order to prompt proper refacing or disposal of these signs. As soon as the need for any sign is ended, the Project Engineer can require the Contractor to remove the sign and return it to WSDOT in good condition. All signs lost, damaged, or destroyed by the Contractor shall be replaced in kind or their value may be deducted from payments due or coming due the Contractor. Some contracts specify Contractor provided signs, where the Contractor is required to furnish the signs as well as perform the installation, placement and removal.

At no time should signs be left in traffic control position during periods when they are not necessary to traffic safety. Indiscriminate use of traffic control signs soon destroys public confidence and respect for the signs. Unnecessary traffic restriction and inconvenience tends to reduce the effectiveness of all signing and causes difficulty in enforcement by authorities. The Project Engineer should ensure that signs are removed or completely covered with metal or plywood during the hours they are not needed, either before or after working hours and on nonworking holidays or nonworking weekends.

Signs needed for moving work zones should be relocated as the work unit moves so that the length of the restriction area is kept to the minimum required. A warning sign too far in advance of the work area has little value. It is also necessary to inform the motorists when they have left the restriction area. If the end of this restriction area is the end of the project, the Class “A” “END ROAD WORK” sign should be sufficient. If the restriction ends within the project limit, a reverse taper of traffic cones ending the lane or shoulder closure or a portable “END ROAD WORK” sign is adequate. If traffic congestion extends past the first advance warning sign, the sign should be moved back or another sign installed to provide adequate warning. Turning signs away from oncoming traffic is not adequate since traffic approaching from other directions may be exposed to the sign.

Signing for nighttime traffic is more difficult than that required for daylight hours. All signs used during the hours of darkness shall be reflectorized. A review of the project signing should be made and recorded during the hours of darkness.

Signs and other traffic control devices should be shown on the contract TCP’s and should be installed with adjustments for work zone and traffic conditions. If typical TCPs are used rather than site specific TCPs, additional signs or devices may be needed to address the actual work zone conditions. The Contractor (TCM and TCS) and WSDOT (TCS) should ensure proper use and placement of signs and devices. For situations not addressed by the TCPs, the Project Engineer will determine who is responsible for preparing a revised TCP. Refer to the Work Zone Traffic Control Guidelines Book, MUTCD, or seek assistance from the Region Traffic Engineer for appropriate TCP revisions. A modified or new TCP may be needed if adjustments to signs and devices do not adequately address existing hazards or resolve observed traffic problems or accidents.

1-2.3C(9) Flaggers, Spotters and Traffic Control Labor

- FLAGGERS

  Typically, flaggers have the highest exposure to traffic hazards and are more frequently injured or killed than other workers. Flaggers should only be used when all other forms of traffic control are inadequate to control traffic. When flaggers are used, flagging stations must be shown on the TCP along with the required warning signs and devices. Flagger stations should be protected with a positive barrier, if possible. The flagger should also have in mind an “escape plan” to avoid errant vehicles. It is not recommended to use flaggers at locations, such as freeways, where their primary function of warning or directing traffic is ineffective or not intended. Use of flaggers to exclusively display the “SLOW” message is also not recommended. Additional guidance on the use of flaggers is located in the *“Traffic Manual”, “Standard Specifications” and the “Work Zone Traffic Control Guidelines Book.”*

All flaggers working on WSDOT construction projects must have a valid State of Washington flagging card or a flagging card issued by the states of Oregon or Idaho.

- SPOTTERS

  Flaggers used as spotters to protect an exposed work crew may be considered appropriate if other worker safety measures are not feasible. Before the Project Engineer approves the use of a spotter, careful evaluation of the hazards involved should indicate that the spotter can actually provide a safety benefit to the work crew without undue risk to the spotter.

- TRAFFIC CONTROL LABOR

  Workers involved in traffic control labor are required to wear high visibility clothing as specified in Section 1-07.8 of the *Standard Specifications*. For some projects, labor in addition to the assigned Flaggers is needed to install and remove traffic control in an efficient manner. The item, "Traffic Control Labor" will be measured and paid by the hour for the actual number hours performing work as described in Section 1-10.3(1) of the *Standard Specifications*. No additional hours will be allowed for relief flaggers when the regular flagger is on break except that when a TCS acts as a relief flagger for approximately 15 minutes or less, both shall be paid their respective rate through the break period. No adjustment in the hourly bid amount will be paid for overtime work.

  Portions of an hour will be rounded up to a whole hour.

1-2.3C(10) WSP Traffic Control Assistance

WSDOT has an agreement, GC9131, with the Washington State Patrol (WSP) for that agency to provide troopers and vehicles to help with traffic control on construction projects. WSP traffic control assistance is considered an enhancement to the required work zone traffic control and should be reserved for those work zones that have unusual hazards or a high degree of worker exposure to traffic which cannot be addressed by traditional traffic control means. In areas where GC9131 is not used, the WSP are usually helpful during their normal course of business.

The Project Engineer should ensure that good communication is maintained with WSP troopers assigned to the project and that the appropriate traffic control strategy is applied. On each shift of WSP traffic control assistance, Form 421-045, WSP Field Check List, shall be filled out. WSDOT will fill out the top portion of the form and give it to the WSP trooper on the project to complete. At the end of the officer's shift, the completed form shall be returned to WSDOT.

The Contractor shall not direct the activities of the WSP.

Instructions for WSP assistance are in Instructional Letter "IL 4008.00" and the *Traffic Manual* M 51-02.

1-2.3D Speed Reductions

If speed reductions are considered, the Project Engineer shall consult with the Regional Traffic Engineer in advance of the need. Per RCW 47.48.010 and Directive D55-20, the Regional Administrator may post advisory speeds and/or establish a reduced regulatory speed limit. Speed reductions must be determined in accordance with standard traffic engineering practice by the Regional Traffic Engineer.

- ADVISORY SPEED

  Within a construction area, there may be short sections of roadway, such as curves or rough roadway, which may not be safely negotiated at the established speed limit. For these areas, an advisory speed sign should be used in conjunction with proper warning signs. The speed shown on the sign is not intended as an enforceable limit but should show, in multiples of 5 miles per hour, a safe speed for normal conditions of weather and lighting. Advisory speed signs should only be used in conjunction with appropriate warning signs.

- REGULATORY SPEED LIMITS

  Traffic controls that are designed and implemented for site specific work zone conditions, including actual traffic speed, are generally more effective than a speed limit reduction. Speed limit reductions should be considered at work zones where conditions reduce operational safety to a point where other traffic control measures are not effective.

  Directive D55-20 describes the appropriate conditions and requirements to implement advisory speeds and reduced regulatory speed limits.

1-2.3E Records of Construction Signing, Accidents, and Surveillance

Due to the increased damages being awarded by the courts for improper signing, it has become more important that detailed records of signing and delineation be continuously maintained on every project on sections of highway within the construction limits under traffic. The following are recommended procedures and methods of recording the signing on the project:

- Use extensive photographic or videotape records.
- The Contractor's signing must adhere to the TCP, and the records must confirm that the sign installation is checked against that plan. The Regional Traffic Engineer should only be involved in significant changes to TCPs and need not be involved in minor adjustments.
- Documentation of the Contractor's activity for traffic control, including signing, should be completed by the Contractor's Traffic Control Supervisor (TCS). In accordance with the *Standard Specifications*, the TCS must maintain a daily project traffic control diary. DOT Forms 421-040A, "Contractor's Daily Report of Traffic Control- Summary", and 421-040B, "Contractor's Daily Report of Traffic Control Traffic Control Log," are provided to the Contractor for this purpose.

The Summary report will typically contain a brief description of the daily activities of the TCS with expanded details of any important happening such as accidents, meetings, decisions, or rapidly deteriorating conditions of traffic or weather. The Summary report is usually sufficient to verify the location and status of Class A signs once they are installed.

- The Traffic Control Log report is used to specifically identify all details of each Class B work zone setup. This includes identification of specific signs used, location of the signs, location of flaggers, location of the work zone, the time it was set up, and the time it was removed. Additional information includes cone layout, if used, comments about piloted traffic, and comments about the relationship of the setup to an approved traffic control plan.

The Project Engineer should make an effort to become aware of any accident that occurs within the project area. Where possible, thorough records should be maintained about the accident, including site conditions and the status of signing and other traffic control measures. In case of an incident investigated by the WSP, do not move signs until released to do so by the trooper. When inspections are made of the work zone, either by project or region personnel, the documentation of these inspections should be maintained in the project files. The 1997 report on Highway Work Zone Reviews contains recommendations for review procedures and reporting format. The report emphasizes the following points:

- Each Region should designate an office or individual responsible for oversight of traffic control issues.
- Regions should conduct regular reviews of traffic control with management involvement and document results.
- Expand discussion of work zone traffic control within the Region.
- Regions will take the lead in scheduling statewide annual traffic control reviews.
- State Traffic Office will prepare an annual summary of the statewide traffic control reviews.

1-2.3F Resources for Traffic Control and Work Zone Safety

The following information may provide additional guidance and more specific detail. Also, this list includes the staff, reference documents and manuals mentioned throughout Section 1-2.3 of this manual.

- *Work Zone Traffic Control Guidelines*, M 54-44
- *Traffic Manual*, Chapter 5, M 51-02
- MUTCD Part VI
- Work Zone Safety Task Force Recommendations
- Quality Standards for Work Zone Traffic Control Devices (ATSSA)
- Work Zone Traffic Control Supervisor's Notebook
- Highway Work Zone Reviews, 1997 (Work Zone Safety Task Force)
- Planning and Scheduling Work Zone Traffic Control (FHWA-IP-81-6)
- Directive D 55-20, Reduced Speed in Maintenance and Construction Zones
- Instructional Letter IL 4008.00, "WSP Traffic Control Assistance in Work Zones"
- Traffic Control Supervisor Evaluation - Final Report
- Region Construction or Traffic Office and Public Information Officer(Traffic Engineer or Work Zone Traffic Control Specialist)
- State Traffic Office (Traffic Specialist or Traffic Control Engineer)

1-2.4 Application of Contract Provisions, Plans, and Specifications

1-2.4A Construction Contracts Information System (CCIS)

The CCIS system is a mainframe application designed to track contract information and generate reports for all WSDOT administered construction projects. The initial setup of contract information into CCIS is done automatically by using information in the CAPS system. However, after the initial setup, the project offices enter the majority of the contract information into the CCIS system. The data entered is then maintained and stored on the mainframe.

CCIS generates the Weekly Statement of Working Days and tracks Change Orders. The system creates the forms for these reports so a preprinted form is not needed. Following is a list of data that needs to be entered into the CCIS database over the life of the project:

Contract Information

Region Administering contract

Region the contract is located in

Regional Administrator

Operations Engineer

Project Engineer

Begin and End mile post

County

Prime Contractor's local address, if applicable

Prime Contractor contact person

Prime Contractor D/M/WBE type if applicable

Prime Contractor ethnic code if applicable

Date of Statement of Intent to Pay Wages—Prime

Date of Contractor and Subcontractor/Agent Cert. for F.A. Projects

Date of Affidavit of Wages Paid

Date of Preconstruction Meeting Minutes

Date time started

Date work started

Date Orig. Progress Schedule approved

Date of Substantial Completion

Date of Physical Completion

Final Estimate to Contractor

Date of Completion

Final Estimate to Headquarters (filled in by Region office)

Contract time

Request to Sublet

Training Program

Apprentice/Trainee Approval Request

Change Orders

Verbal Approval

Date sent to Contractor

Date received from Contractor

Is there Surety consent

Date of Surety consent

Dates of approval and execution

Weekly Statement of Working Days

Refer to the *CCIS Manual* for details on using the system.

1-2.4B Order Lists

Contract language requiring an order list can be found in Section 6-05.3(2), which addresses piling other than cast in place concrete and steel piles, and in Section 8-21.3(1), which addresses the determination of lengths of wood and steel sign posts. In other types of work, such as drainage, guardrail, etc., the actual layout will often result in quantities and lengths that vary from the plan estimates. A project engineer could choose to communicate this information in several ways, one of which could be the development of a formal order list. If an order list is used, extra care should be taken to ensure its accuracy. An alternate method of notice could also be a walk through with the contractor representative after staking.

1-2.4C Changes in the Work

- INTRODUCTION

  WSDOT reserves the right, under *Standard Specification* 1-04.4, to make changes to the work, work methods, working days, or quantities, as necessary to satisfactorily complete the project as originally intended.

  Adding work beyond the original scope is, in essence, entering into a contract to perform work without the benefit of a competitive bid. There is a statutory (RCW 47.28.050) exception from the competitive bid requirement for work up to a value of $7,500. If the value of the work is in excess of $7,500 it is necessary to go through the competitive bidding process.

1-2.4C(1) Types of Changes

There are several categories of changes that may occur during the course of the work. A change may warrant additional payment to the contractor or a credit for the contracting agency. A change may also warrant an increase or decrease in the working days. Every situation is different. The *Standard Specifications* are very specific on what additional costs are eligible for adjustment. The balance of this discussion of types of changes is intended to help describe and explain the various categories of changes.

(I) VARIATIONS FROM ORIGINAL BID QUANTITIES

Contracts are set up with estimated quantities. Contractors provide unit prices and actual measured quantities are paid using those unit prices. What happens when the actual measured quantity varies from the estimated proposal quantity? The WSDOT Standard Specifications (Section 1-04.6) require that variations of less than 25% be performed without changes in the bid price, but that variations greater than 25% may qualify for a renegotiation of the contract bid. This distribution of estimating risk is a policy of WSDOT and is also a Federal requirement for any project with Federal funds.

Variations may occur because field conditions cause a different quantity for the planned work than was envisioned during the estimating. Other variations may occur when work is added or deleted by change order and original contract unit items are included as the method of pricing the change order. Finally, quantity variations occur when work is added, deleted or revised without a formal change order (constructive change) and units with unit prices are the only measure of the revision.

As discussed below, quantities included in formal change orders are excluded from consideration of quantity variations. The project engineer who allows constructive changes without formal documentation may find an additional negotiation waiting when final adjusted quantities are calculated and compared with the original proposal quantity.

A unit bid price consists of four different parts. First, and most obvious, are the costs of labor, equipment, materials and services needed to accomplish the work. These are the "direct costs" involved and they vary directly with the amount of work. Second are the variable overhead costs, such as field supervision, field support items (phones, computer rental, payroll clerks, sanicans, etc) whose amounts will vary along with the direct costs. Third, and more difficult to assess, are unavoidable, distributed, fixed overhead costs. These are typically long term and exist whether the quantity varies or not. They include things like home office costs, field trailer setup, long term equipment rentals and other fixed costs. These are typically distributed to the project by allocating them to the plan quantity. Fourth, and finally, the unit price will include some amount for profit.

[1] Section 1-04.6

The standard contract provision calls for the calculation of an adjusted final quantity. This is the method of revising the final measured quantity to allow for proposal item quantities included in agreed change orders. Unit prices as originally bid will be utilized if the adjusted final quantity is more than 75% of the original proposal quantity and not more than 25% greater than the original proposal quantity.

If the final adjusted quantity is outside these limits, then either party to the contract may initiate a renegotiation. If neither party does so, then unit prices will apply to the entire measured quantity of the item. Neither of these actions would be a change to the contract, as the provisions already allow a price change. A formal change order document might well be initiated to show the agreement, however, and would be the mechanism to create new prices.

If a negotiation is initiated, the provision calls for a new price for the quantity in excess of the 25% overrun or a contract price adjustment to compensate for costs and losses associated with an excessive underrun. The renegotiated price for the overrun portion is not an equitable adjustment and this is an important distinction. The new price is based upon actual costs experienced and is completely unrelated to the old bid price. The typical discussion about "what's different from the bid work and what number should be used to modify the bid price?" does not apply in this type of negotiation. The underrun compensation is an equitable adjustment, however, and much of the negotiation is related to the bid price and discussions of the actual work costs as opposed to the planned costs.

Other features of the provision include an exclusion of force account items and other items where an amount has been entered solely to provide a common proposal for the bidders. Consequential damages and lost profits are specifically excluded. The effect of any unbalanced allocation of overhead costs is also excluded from compensation under the provision.

Force accounts and calculated quantities are already taking actual costs into account for overruns. Because of the nature of these items, contractors are unable to allocate unavoidable fixed costs to them except as a share of the allowed markup. The contractor is aware of this provision at the time of bid and knows that this item will not be eligible for renegotiation in the case of an underrun.

Consequential damages are those which are separated from the project and which might be presented as part of a negotiation. "Because of your overrun, I was unable to start work on my other project and had to do that other work in the wintertime." This *consequence* of the quantity variation is not compensable because of the wording of the provision. Similarly, the profit that the contractor might have made on some other work but for the need to perform the extra work in an overrun is also not compensable.

Unbalanced bidding might result in a significantly higher or lower price for an item than normal. It means that too much or too little of allocated overhead or other costs is assigned to the item. This is not a problem in a low bid situation when all items come in at plan quantity. The problem would arise if an unbalanced item were to be involved in an excessive underrun. This provision allows the project engineer to evaluate this possibility during an underrun negotiation (remember that the overrun pricing takes care of the problem automatically by assessing cost and ignoring the bid price.)

The last element of the provision has to do with contract time. The parties to the contract agree that any variation in quantity that does not qualify for renegotiation will be performed within the original time for completion. An overrun greater than 25% would be eligible for time if the increased quantity of work could be shown to have caused a delay in completion. On the opposite hand, an underrun of more than 25% might well qualify for a reduction in contract time.

[2] Negotiation Guidelines

{a} Adjusted Final Quantity The Standard Specification language is quite clear on this subject. Start with the final measured quantity, the number that would be included in the final estimate for the item. Review all change orders that have been approved and have been accepted by the Contractor (see Section 1-04.5 for a definition of contractor acceptance of change orders.) Identify change order increases in the item and subtract these from the final measured quantity. Identify change order decreases in the item and add these to the result of the previous subtraction. The result of these calculations is defined as the Adjusted Final Quantity.

Compare the Adjusted Final Quantity to the original proposal quantity. If the Adjusted Final Quantity is greater than 1.25 times the original proposal quantity, then the item is eligible for an overrun renegotiation. If the Adjusted Final Quantity is less than 0.75 times the original proposal quantity, then the item is eligible for negotiation of an equitable adjustment due to underrun.

{b} Renegotiation for Overruns The first analysis should be to determine, if possible, where and when the overrun took place. This is not necessarily the work done after the quantity of 1.25 times proposal was reached. In many cases, a review of the work will disclose which part of the project actually experienced the low estimate and the resulting extra quantity. This is more common in physical items that are visible and can be measured by weight or physical dimensions (Roadway Excavation, Culvert Pipe, Select Borrow, etc.) These are often detailed in the plans to the extent that actual work can be compared with the relevant portion of the proposal quantity. When actual overrun work can be identified and when records exist showing the resources utilized for that work, then those records can form the basis for the revised payment amount. In other cases, the item is a support function, often measured by time, where the plan segments cannot be separated for analysis. This is common in Flagging, Pollution Control items, etc. To analyze these, the only choice is often to look at the actual work that occurred after the threshold was reached and price it. A third method, where records are adequate, is to evaluate the actual costs for the entire item, and apply those only to the overrun units.

Regardless of method of determining direct cost, markups will be allowed. A good place to start would be the force account percentages described in Section 1-09.6. If the contractor is providing other records for overhead and profit, these can be used, if they are reasonable. Any overhead items that are unavoidable, distributed fixed costs should be excluded. Remember that the Contractor has already been compensated for these one and a quarter times over.

The revised price will apply only to the units measured in excess of 1.25 times the original proposal quantity. The overrun units between the proposal quantity and the threshold will be paid, according to the terms of the contract, at the bid price.

{c} Equitable Adjustment for Underruns The adjustment for an underrun is limited by the contract terms to three factors. The first of these is an adjustment for any increase or decrease in direct costs that result solely from the reduction in quantity. The most common example of this type of cost is the learning curve. "By the time my crew learned how to do this work at this site with these specifications, we were done. They should have been able to apply these skills to an additional 30, 40 or 50 percent of the plan quantity. I experienced the least efficient units and missed out on the most efficient." In negotiation, this might be demonstrated by production rates, by inspectors' reports or by the agreed judgment of the negotiators. If such a condition did exist, then an agreed amount for inefficiency during the learning curve could be included in the adjustment.

The second factor has to do with the nature of the work actually done, when compared with the work shown in the plans. The most common manifestation of this is "You deleted the easiest units and left me with the most difficult," or "You added units that were much more difficult than those shown in the plan." Compensable, if true. Logic dictates that, if all of the work shown in the plans was performed and, if no work was added except by formal change order, then this factor can have no value. The work that was performed was what was shown in the plans and was what the Contractor bid. If, on the other hand, the project engineer has allowed constructive changes without formal documentation, then this factor could well come into play.

Finally, the negotiation should include a look at reallocation of undistributed unavoidable fixed overhead costs. The contractor has allocated these to 100% of the proposal amount. The bid price is firm as long as 75% of the units are measured and paid. If the final adjusted quantity is less than 75%, then the anticipated contribution of the units not performed (up to 75%) can be identified, negotiated and included in the equitable adjustment.

One final aspect of underruns: There is a reality that, if more units were paid up to the 75% threshold, then there would be no eligibility for negotiation. Because of this, there is a limit to the equitable adjustment. The total paid for the item, including units actually performed and the equitable adjustment cannot exceed 75% of the original proposal quantity, multiplied by the unit bid price.

(II) DELETION OF ITEMS

[1] AUTHORITY TO DELETE As provided in Sections 1-04.4 and 1-08.10(2) of the *Standard Specifications*, WSDOT may cancel all or portions of work included in a contract. When deleting work that is condition of award (COA), be sure to also delete that work from the COA requirements by completing the condition of award portion of the change order in CCIS. An adjustment in working days may also be appropriate.

[2] PAYMENT FOR REMAINING WORK There are some limitations to payment that should be noted under *Standard Specification* 1-09.5. When work is decreased or deleted by the contracting agency, payment will only be for the costs actually incurred for partially completed work. No profit will be allowed for work that was not completed. Consequential damages are also not allowed. Consequential damages may include such things as: loss of credit, loss of bonding capacity, loss of other jobs, loss of business reputation, loss of job opportunities, etc. In the case a portion of a lump sum item or partially completed unit items, the value of this work will need to be determined. It may also be necessary to negotiate a price adjustment for the work that was performed and paid using a contract unit price if there is a material difference in the nature of the accomplished work when compared to the nature of the overall planned work. Under certain circumstances when the contractor says "you eliminated all the easy work and left the difficult," there may be entitlement to an adjustment.

In the event that the deletion impacts the critical path for the project, an adjustment in working days may also be appropriate.

[3] PAYMENT FOR MATERIALS When work is deleted from the project and the contractor has already ordered acceptable materials for such work, Section 1-09.5 of the *Standard Specifications* controls.

{a} contractor restocks The first and best method for disposing of the materials is to request that the contractor attempt to return the materials to the supplier at cost or subject to a reasonable restocking charge. If the materials are restocked then, in accordance with Section 1-09 of the *Standard Specifications*, the contractor's actual costs incurred in handling the materials may be paid.

{b} contractor purchases If WSDOT cannot utilize the materials, the contractor may elect to retain them for other work. Once again, in accordance with Section 1-09 of the *Standard Specifications*, the contractor's actual costs incurred to handle the materials may be paid.

{c} state purchases and disposes As a last resort, if the materials can not be disposed of at a reasonable cost to WSDOT, the Department may choose to purchase the materials from the contractor. There are some limitations that come with the use of federal funds that may require that the materials be purchased with state funds depending on the situation. The State construction office may be contacted for advice. If possible, such materials may be provided to a future contractor (work with Design) or to Maintenance (work with the Regional Maintenance Office). If the materials cannot be used, they shall be disposed of as described in the manual for *Disposal of Personal Property* (M 72-91). Once again, in accordance with Section 1-09 of the *Standard Specifications*, the contractor's actual costs incurred in handling the materials may be paid.

(III) CONTRACT MODIFICATIONS

Changes in Materials, Work Method, or Work Sequence may or may not be a change to the contract. The determining factor is if the change is a modification of a specific contract requirement. If the contract includes language such as "recommends", "suggested", or "approved equal" associated with the item or allows the engineer to approve changes, then a change order is probably not required. In essence, this would not be a violation of the contract and therefore, does not require a change to the contract. A common situation is when the contractor proposes a change to a submitted manufacturer's recommendation, drawing or plan such as a falsework drawing or erection plan. Changes to those drawings/plans may be made by the same authority that approved them the first time. Once again, it is not a change to the contract.

(IV) COST REDUCTION INCENTIVE PROPOSAL (CRIP)

It is the policy of WSDOT to encourage our contractors to be innovative in planning and performing the work when a cost savings can be realized. When a contractor identifies such a savings and provides a significant portion of the efforts needed to develop the proposal, then WSDOT will share the resulting savings with the contractor. This policy is carried out through change orders containing Cost Reduction Incentive Payments. The Project Engineer should encourage CRIPs and seriously consider the mutual benefits of these proposals brought forth by the contractor as a partner in the contract.

[1] IS IT A CHANGE/CRIP? A proposal may include material and/or product substitutions, work method changes, work sequencing changes, etc., that normally take place during the construction of a project. Contractor proposals do not require change orders nor qualify as CRIPs when the change does not require modification of the contract. See the previous section "contract modifications".

[2] AGENCY CREDIT OR NO COST CHANGES (NOT A CRIP) The contracting agency is not obligated to accept a proposal which is not equivalent or superior to what is required by contract. However, if a contractor proposed change is acceptable and desirable to WSDOT, but is not equivalent or superior to what is specified by contract, then a credit should be considered as part of the change order. This type of change would not be considered a CRIP. The credit required would normally be 100 percent of the cost or time savings. If it is determined that contract time is not affected and that the cost differential is negligible or to the state's advantage, then the change might require a "no cost" change order. If, in the opinion of the evaluator, the State is not harmed and there is no windfall savings for the contractor, then a no-cost change would be appropriate.

[3] IDENTIFYING A TRUE CRIP

A CRIP might exist if:

- the change is the contractor's idea
- it offers, in effect, the same end result as what is specified in the contract
- savings will be achieved in dollars or time by its implementation

Qualifying actions by the contractor:

- accepts design risk of temporary features
- accepts risk of constructability
- makes a significant effort to develop the proposal
- employs an engineer to assist in development (indicator, but not required)
- prepares all documentation, presentations, and plans
- invests an appreciable amount of time

[4] DEVELOPMENT OF CRIPS Once a CRIP is identified and developed to the point of conceptual approval, it is treated in nearly the same manner as any other change order. There are some differences, such as the contractor's responsibility for preparing the documents, and there is a special method of calculating the incentive payment amount. In the interest of uniformity, the following guidelines are to be used for the evaluation of CRIPs submitted by the contractor:

General Requirements and Principles Applying to CRIPs:

- The proposed change must alter a contract requirement.
- The proposed change must result in a product that meets the intent of the original design.

- In the judgment of the evaluator, the ultimate life cycle costs to WSDOT shall not be unduly increased.
- The contractor agrees to substitute for deleted condition of award COA work.

Additional Requirements for Time Reduction CRIPs:

- The time saving is a direct result of an actual change in the design or method of work (simply adding more crews would not qualify as a CRIP).
- The original time for completion was realistic (an early finish of a job with an unnecessarily long time for completion would not be a CRIP).
- The project does not already have an incentive/disincentive clause (in that case, the cost of accelerating the completion is assumed to be included in the bid and a CRIP sharing of the cost is inappropriate).

{a} Step 1: concept approval The first effort in development of a CRIP shall be to achieve concept approval. To this end, the contractor shall submit a written proposal to the Engineer for consideration. The proposal shall contain the following information:

- An explanation outlining the purpose of the change(s).
- A narrative description of the proposed change(s). If applicable, the discussion shall include a demonstration of functional equivalency or a description of how the proposal meets the original intent of the design.
- A cost discussion estimating any net savings. Savings estimates will generally follow the outline below under "Calculating the Incentive Payment".
- A statement providing WSDOT with the right to use all or any part of the proposal on future projects without further obligation or compensation.
- A statement acknowledging and agreeing that the Engineer's decision to accept or reject all or part of the proposal is final and not subject to arbitration under the arbitration clause or otherwise be subject to claims or disputes.
- A statement giving the dates the Engineer must make a decision to accept or reject the conceptual proposal, the date that approval to proceed must be received, and the date the work must begin in order to not delay the contract.

A separate copy may be sent to the Headquarters Construction Office to initiate tracking of the progress of the proposal. After review of the proposal, the Engineer will respond in writing with acceptance or rejection of the concept. This acceptance shall not be construed as authority to proceed with any changed contract work. Depending on the nature of the proposal, the review could include Region and Headquarters designers and, possibly, outside consultants. The completeness and quality of the proposal will have an effect on the time needed for the review. WSDOT will make every effort to expedite the review.

{b} Step 2: formal approval Concept approval allows the contractor to proceed with the work needed to develop the final plans and other information to support the ultimate preparation of a change order. To qualify for an incentive payment, the contractor will normally take the lead in the development effort. The Project Engineer is encouraged to provide whatever assistance is needed. The development of a CRIP is an example of partnering at work in a contract. The contractor's submittal shall provide the Project Engineer with the following:

- Deleted Work — Calculated quantities of unit price work to be deleted. Proposed partial prices for portions of lump sum work to be deleted. Time and material estimates for deleted work in force account items.
- Added Work — Calculated quantities of unit price work to be added, either by original unit contract prices or by new, negotiated unit prices. Proposed prices for all new items to be negotiated.
- Contractor's Engineering — Costs of engineering to develop the proposal shall be submitted. Costs of employees utilized in contract operations on a regular basis will not be included.
- Schedule Analysis — If the CRIP is related to time savings, a partial progress schedule showing the changed work. A discussion comparing this schedule with the approved progress schedule for the project.
- Plans and Working Drawings — All drawings and supporting calculations necessary to accomplish the work. Those drawings which include engineering calculations and features shall be prepared by a professional engineer licensed in the State of Washington and shall bear the professional engineer's signature and seal.

{c} Step 3; Preparing and approving the change order The change order itself shall be prepared and processed in the same manner as any other change order.

Calculating the Incentive Payment In the interest of uniformity, all CRIP change orders shall include separate payment items as follows:

- Any deleted work, whether at contract prices or at agreed prices.
- Any added work, whether at contract prices or at agreed prices.
- The contractor's engineering costs, reimbursed at 100 percent of the contractor's cost.*

- The incentive payment to the contractor.*

  *Where added work exceeds deleted work, but time savings make a viable proposal, these two items would be replaced by:

  - WSDOT's share of added cost to achieve time savings.
  - The contractor's share of savings from deleted work.

The final sum of these shall ordinarily be the savings to WSDOT. However, in some cases, savings may be offset by any increased inspection and administration costs, or augmented by intangible benefits, such as user benefits, or by indirect benefits, such as overhead and engineering savings in time reductions, or by theoretical savings, such as a CRIP that eliminates a large anticipated overrun in plan quantity. In these cases, the benefits would not be expressly reflected in the change document, but should be discussed in the justification letter.

Proposal Savings: The incentive payment shall be one-half of the net savings of the proposal calculated as follows:

(gross cost of deleted work) - (gross cost of added work) = (gross savings)

(gross savings) - (contractor's engr. costs) - (WSDOT's engr. costs) = (net savings)

(net savings)/2 = (incentive pay)

WSDOT's engineering cost shall be actual consultant costs billed to WSDOT and extraordinary in-house personnel labor costs. Project personnel assigned to the field office or who work on the project on a regular basis shall not be included.

Cost to Achieve Time Savings:

(cost of added work) + (contractor's engineering costs) = (cost to achieve time savings)

(cost to achieve time savings)/2 = (WSDOT's Share of Added Cost)

If the timesaving proposal also involves deleting some work and, as a result, creates a savings for WSDOT, then the contractor would also receive one-half of the savings realized through the deletion.

{d} Authority to Proceed with Changed Work The need may arise to proceed with changed work before the change order is executed. WSDOT is willing to provide an approval, allowing the work to proceed, if the following criteria has been met:

- Concept approval has been granted.
- The necessary design reviews and approvals have been completed, including plans and specifications.
- The contractor has guaranteed, in writing, the minimum savings to WSDOT.

Such advance approval, if given, shall be in writing and shall constitute commitment by WSDOT to ultimate formal approval of the proposal. Where appropriate, the advance approval may contain a narrative formula of the elements to be utilized in the final cost negotiations. When work has begun under such an approval, detailed records shall be kept of the labor, equipment, and materials utilized and, if ultimate approval is not gained soon enough to provide prompt payment for the work, then an interim change shall be executed to allow partial payments.

{e} Problems Arising After the Agreement The contractor assumes the risk of constructability. However, there will occasionally be problems that arise while the work of the CRIP is being performed. These will be evaluated on a case-by-case basis. The controlling philosophy will be that we entered the CRIP as a team with the contractor and we will approach problems in a similar vein. If the problem is something that could not reasonably have been anticipated in the design work of the CRIP, then the risk shall be shared as will the cost of the solution.

{f} Proposed CRIP is not accepted If the evaluator decides to reject a CRIP proposal, the contractor will be notified in writing with an explanation. Copies of this notice, with an attached analysis of evaluation costs and any other factors, shall be provided to the Region Construction Manager and the Headquarters Construction Office.

1-2.4C(2) Equitable Adjustment

(I) PRICING

Section 1-04.4 of the *Standard Specifications* specifies that an equitable adjustment (EA) in accordance with Section 1 09.4 will be made when changes cause an increase or decrease in the cost of performing work on the contract. The basic theory of an EA is to leave the parties to the contract in the same position cost wise and profit wise as they would have been without the change, preserving to each as nearly as possible the advantages and disadvantages of their agreement. Although the contractor is entitled to profit on the changed work, the profit (or loss) on the unchanged work should remain unaffected by the equitable adjustment.

- This is an important point, *for unchanged work*, the contractor is entitled to the profit bid or a windfall, if the work turns out to be easier than expected.
- On the other hand, *for unchanged work*, the contracting agency is not obligated to make the contractor well for an under bid item.

Consequential damages are never allowed as part of a negotiated equitable adjustment. Consequential damages may include such things as: loss of credit, loss of bonding capacity, loss of other jobs, loss of business reputation, loss of job opportunities, impacts to another project, etc.

[1] UNIT PRICES An appropriate price may be

established using average unit bid prices, citing similar unit bid prices, a determination of market value, by estimating the cost to perform the work, or a combination of these methods. Unit bid price is one indication of an equitable price, however the contracting agency should be prepared to support the price by other means.

[2] FORCE ACCOUNT When added work is paid by force account, a change order shall be prepared detailing the added work to be performed and the estimated cost. Standard Item Number 7715 is to be used for all force account items that do not have an assigned standard item number. Force account should be a last resort used only if the work can't be clearly defined.

[3] OVERHEAD There are two basic types of overhead as follows:

- DISTRIBUTED FIXED COSTS: Offsite "home office overhead" is the cost of running a company. These costs are assumed to be distributed among all the projects performed by the company. Onsite overhead is incurred as a function of time needed to accomplish the project. Onsite costs are assumed to be evenly distributed among contract items. This category of overhead is eligible under an equitable adjustment if working days are added to the contract as part of the adjustment.
- VARIABLE FIXED COSTS: these costs are directly associated with performing an item of work on the project and therefore vary with the quantity, the contractor is entitled to recover these costs as a part of an equitable adjustment.

(II) FORWARD PRICING AND RISK

The first and best option for an equitable adjustment is agreement in advance between the contractor and WSDOT on the increased or decreased cost and time for performance of the changed work. The Project Engineer should expend every effort possible to obtain a satisfactory negotiated equitable adjustment prior to submitting the change order to the contractor for endorsement. The Project Engineer must remember that the contractor is a full participant in the contract and retains all the rights and privileges during a negotiation. When bidding a job, the contractor must be optimistic and take appropriate risks. When negotiating, it is understandable and acceptable for the contractor to be pessimistic and avoid risk, unless compensated. Some key points to remember are:

- A negotiated price will likely be higher than a competitive bid price.
- A proposal which assigns extensive risk to the contractor will likely be more costly yet.
- The contractor may be willing to take on this risk if the price is a bit higher
- The significant advantage of reaching a price agreement before the work is started (forward pricing) is that the contractor assumes the risk of the accuracy of the pricing assumptions and predicted duration for performing the work.
- (when forward pricing) the Project Engineer may utilize the high end of the estimating range in justification.
- (when forward pricing) an audited overhead rate may be substituted for the markups described in Section 1 09.6. Contractors can usually provide an estimated home office overhead rate which may be checked by an annual audit, if warranted.

(III) PRICING AFTER FACT

When establishing prices after the work has been performed, actual costs should be used to the extent they are available. The following are key points to keep in mind:

- Costs for equipment cannot exceed the rates established by the AGC/WSDOT *Equipment Rental Agreement* for an equitable adjustment.
- When pricing after the fact, the markups described in Section 1-09.6 are appropriate for measuring time and materials because there is no risk involved in after the fact pricing.

(IV) UNILATERAL PRICING

In the interest of being timely, the change order should be a tool to document agreement and not a negotiation tool back and forth. Ideally we will have agreement with the contractor when pricing the work. On occasion, however, due to time constraints and difference of opinion, we can't always come to agreement. The difference of opinion may be for only a small portion of the work. *Standard Specification* 1 09.4 (2) provides, "If the parties can not agree, the price will be determined by the Engineer using unit prices, or other means to establish costs". This is not to say that the contractor is obligated to honor unit bid prices for work that qualifies for an equitable adjustment. This allows us to proceed with changed work prior to reaching an agreement on the price. In the interest of being timely, and provided the Project Engineer is comfortable that the included price can be supported, there's nothing wrong with issuing a change order to the contractor unilaterally. This orders the work to proceed, establishes the State's position on cost, and puts the decision to continue negotiations in the contractor's hands as detailed under 1-04.5. The contractor is obligated to endorse, write a separate acceptance, or protest as described in the specification and a timeline is provided for these actions.

(V) TIME

The completed equitable adjustment should include provisions for any increases or decreases in contract time based on impacts to overall contract duration. The decision on time should be supported by an analysis of the project schedule. Analyzing time in advance encourages

communication between the parties allowing the contracting agency to make an informed decision on the true costs. It also enables the contracting agency to mitigate time impacts if that is in the agency's best interest.

1-2.4C(3) Approval of Changes/Checklist

In addition to noting who can execute a change order, the checklist (see Figure 1-5) further indicates who must approve the change prior to execution. Written approval constitutes agreeing with the general nature of the change and can be granted by memorandum or e-mail. The checklist works as follows: for any item marked "yes", approval must be obtained as indicated by the columns with the "Xs". Each tier, left to right, has the authority to decide not to proceed with the change. This approval does not constitute authority to proceed with the work. That authority must come from the person who will execute the change order (*see verbal approval*.) In an emergency, the Region Construction Manager may authorize work to begin on any change order if the State Construction Office cannot be contacted for the required approvals within a reasonable amount of time.

(I) State CONSTRUCTION OFFICE

[1] FHWA APPROVAL On a project with federal funding and for which the stewardship responsibility has not been delegated, written FHWA approval is required prior to beginning work on change orders that will:

- involve new construction on the Interstate
- alter the termini, character, or scope of work
- increase or decrease the project cost by more than $200,000 (except for changes prepared in accordance with *Standard Specification* Section 1-04.6)

{a} who does what? The State Construction Office will formally submit this type of change order to FHWA for approval.

[2] CONSTRUCTION ENGINEER, ADMINISTRATION

{a} areas of responsibility Contract Payments and Withholding of Payments; Contractor Assignment of Payments; Contractor Default; Time Extensions; Assessment of Liquidated Damages; Contract D/M/WBE, EEO, and Training Programs (i.e., Division 1 of the *Standard Specifications*).

[3] CONSTRUCTION ENGINEER, BRIDGE

{a} areas of responsibility Bridges & Structures; Bridge Deck Overlays; Walls: (1) Standard and Nonstandard Reinforced Concrete, (2) Soldier Pile, Tieback, Slurry, Cylinder Pile; (3) Soil Nail Walls (i.e., Division 6 of the *Standard Specifications*).

[4] CONSTRUCTION ENGINEER, ROADWAY

{a} areas of responsibility Construction Engineer, Roadway—Grading, Paving, Miscellaneous Paving; Culverts and Drainage; Concrete Slope Protection; Bridge Approach Slabs; Lighting; Signing; Traffic Signals; Fencing; Rest Areas; Walls: (1) Gravity Walls—Masonry, (2) Gabion, Rock, and etc., Proprietary Walls—Structural Earth and Geotextile (i.e., Divisions 2, 3, 4, 5, 7, and 8 of the *Standard Specifications*).

[5] State MATERIALS LAB

{a} areas of responsibility as you will notice from the checklist, the lab plays two roles:

CHECKLIST ITEM #10 the Materials Lab advises whether an alternate material is capable of performing the same function as a required material. However, the State Construction Office makes the final approval based on application of the material, maintenance concerns, etc.

CHECKLIST ITEM #11 the State Materials Lab is the design approval authority for a structural change with regard to roadway sections. Once design approval is obtained, the Region may approve the change order.

[6] BRIDGE TECHNICAL ADVISOR (BTA)

{a} areas of responsibility The BTA is an on call advisor to the Project Engineer on issues related to structural design. The BTA's role is to act as a resource for the Project Engineer in answering questions relating to design, plan clarifications and "minor structural changes".

{b} assignment of BTA After the contract has been awarded, the Region may send a written request to the Bridge Design Engineer in the State Bridge and Structures Office for the assignment of a Bridge Technical Advisor (BTA).

{c} delegation of executing authority if BTA is assigned When a BTA has been assigned to the project, the Region may execute certain "minor structural" change orders provided: 1) The BTA's stamp and signature are on sheet one of the change order, or on a drawing that shows the change; or there is other written structural concurrence from the BTA; and 2) The magnitude of the change is within the Region's authority to execute. All other r equirements of the change order checklist apply with the exception that for "minor structural" changes under item #15 the BTA's recommendation may substitute for the State Construction Office approval. A "minor structural" change is not easy to identify, therefore when in doubt, contact the State Construction Office for advice. Changes involving specifications, materials, work method changes, repairs and major design changes should be referred to the State Construction Office. The BTA would never become involved in contract administration issues such as payment, determining the existence of a change to the contract or directing the contractor. These would be construction issues. Structural questions which require support analysis exceeding field capabilities or questions regarding geotechnical or hydraulics issues should be referred to the State Construction Office. Any redesign of significance will be managed through the State Construction Office.

CHANGE ORDER — CHECKLIST

If Yes, Included?	Approval Required				
	YES	NO	PE	Region	State Const.
I. Executed by the State Construction Office					
1. A cost or credit equal to or exceeding $200,000.	o	o	X	X	X
2. A change in the contract documents beyond the scope, intent, or termini of the original contract.	o	o	X	X	X
3. Any proposed revision or deletion of work that effects the condition of award requirements.	o	o	X	X	X
II. Executed by the Region					
4. A cost or credit greater than $50,000 but less than $200,000.	o	o	X	X	
5. A change in contract time greater than 10 and less than or equal to 30 working days must be related to changes implemented by change order.	o	o	X	X	
6. A change in contract time greater than 30 working days or a change in contract time unrelated to any change order.	o	o	X	X	X
7. A determination of impacts and/or overhead.	o	o	X	X	X
8. Specification change, involving Headquarters generated specifications.	o	o	X	X	X
9. Specification change, involving Region generated specifications.	o	o	X	X	
10. Material or product substitution. (Requires State Materials Lab Recommendation)	o	o	X	X	X
11. A structural design change in the roadway section. (Requires State Materials Lab approval)	o	o	X	X	
12. A determination of changed condition.	o	o	X	X	X
13. Settlement of a claim submitted under Section 1-09.11(2).	o	o	X	X	X
14. Repair of damage qualifying under Section 1-07.13 of the Standard Specifications regarding “acts of God” or “acts of the public enemy or of government authorities”.	o	o	X	X	X
15. A structural change for structures (see BTA authority as shown in the Construction Manual.	o	o	X	X	X

Fill in applicable Verbal Approval dates, if any:

PE Date _____ Region Date _____ State Construction Office Data _____

Verbal Approval:
This is approval given by the executing authority (Headquarters, the Region, or the Project Engineer) to proceed with work prior to issuance of the written change order. This approval is warranted on any change where a cost/time benefit to WSDOT can be realized or a cost/time disadvantage to the contractor can be minimized by prompt action.

Figure 1-5

{d} BTA duties The Region and the Construction Office have agreed that "minor structural" questions may be referred to the BTA. Those "minor structural" questions which can be resolved on site may be handled directly by the BTA. Documentation will be provided to the Project Engineer in support of the recommendations. The BTA also takes on the responsibility of keeping the Bridge and Structures Engineer advised of any changes, as appropriate.

{e} BTA guidelines Specific guidelines for the BTA's role on site are as follows:

- Be alert to the need for technical advice to the Project Engineer and be available and responsive to the Project Engineer's requests.
- Develop solutions in accordance with the best structural interest of the project.
- Recommendations should generally be made in writing to the Project Engineer and should include an assessment of the approximate cost of the change.
- Provide the Project Engineer with written documentation to support the recommendations for changes. The Project Engineer will consult with the State Construction Office, as appropriate.
- The BTA has the authority to approve and endorse the structural changes on behalf of the State Bridge and Structures Engineer.
- Keep a written record of activities and recommendations pertaining to the assigned project (project diary).
- Refer/leave contract administration issues to the Project Engineer.
- Conform to the field safety requirements of the Region and the contractor.
- Give the construction project priority but be prudent in the use of time and expenses charged to the project.

The above guides are not meant to be all inclusive, but are generally representative of the scope of services to be provided by the BTA. The BTA's immediate administrative support on site will be provided by the Project Engineer. The BTA's technical responsibility will be to the BTA's regular supervisor in Olympia. Overall determination and monitoring of the assignments will be made by the State Bridge and Structures Engineer.

{f} BTA summary In conclusion, it is the role of Bridge Technical Advisors to advise the project engineer in their area of expertise, which is structural design. The project engineer has the responsibility and authority to administer the contract. Therefore, when it comes to contract issues of payment, work methods, material substitution, etc., it will be the Project Engineer's responsibility to get the proper approval of those aspects of structural changes.

1-2.4C(4) Delegation of Execution Authority

(I) HIGHWAY CONSTRUCTION

The Change Order Checklist (Figure 1-5), in addition to describing the approval requirements previously described, also outlines who has authority to execute a change order.

The State Construction Office executes the change order:

- if any one of 1, 2, or 3 is true (checklist item # 1, 2, or 3 is yes)

The Region (Regional Administrator or designee) may execute a change order provided:

- 1, 2 and 3 are not true of the change (checklist item # 1, 2, and 3 are no)

The Regional Administrator's authority to execute change orders may be:

- delegated to the Regional Construction Manager
- further delegated to the assistant to the Regional Construction Manager

The Region's (Regional Administrator or designee) authority to execute a change order may be delegated to the Project Engineer provided:

- items 1 through 6 are not true of the change (boxes 1 through 6 are marked no)

In the absence of the Project Engineer, the Project Engineer execution authority may be further subdelegated to the Assistant Project Engineer.

(II) WASHINGTON STATE FERRIES

The Director and CEO of Washington State Ferries

(WSF) is authorized to approve all changes for terminal construction projects and may consult the State

Construction Office for advice. This authority to execute change orders may be:

- Delegated to the Director of Terminal Engineering provided the change does not include a cost or credit exceeding $200,000 nor does it change the condition of award requirements.
- Authority may be further delegated to the Manager of Terminal Maintenance and Construction provided the change does not exceed $50,000 and does not include a time extension exceeding 10 days.
- In the absence of the Manager of Terminal Maintenance and Construction, that Manager's execution authority may be further subdelegated to the Assistant.

(III) LOCAL AGENCY PROJECTS

When the project being administered includes local agency participation, the project engineer should coordinate with the Regional Local Programs Engineer and the local agency to establish an approval process acceptable to all the parties. Any funding constraints and timelines for reviews and approvals should be established and specified in the contract, if appropriate.

1-2.4C(5) Verbal Approval

The best business practice is to have a signed change order in place prior to proceeding with the work. Verbal approvals should be the exception. A verbal approval might be warranted if it will provide a cost/time benefit toWSDOT or minimize a cost/time disadvantage to the contractor. In the event that the Project Engineer determines that it is in the State's best interest to proceed with the work prior to having a signed change order, the permission "verbal approval" of the executing authority to proceed with the change under these circumstances must be documented in the file. The executing authority is the person who will ultimately execute the change order. The project engineer must have either an executed change order or a verbal approval in place prior to proceeding with the work

1-2.4C(6) Documentation

(I) STATE CONSTRUCTION OFFICE ROLE

The State Construction Office will review Region executed change orders and provide appropriate feedback. Four main areas the Construction Office will review are:

- whether the change is appropriate and there is entitlement
- determine compliance with the change order checklist
- check for existence of supporting documentation
- determine if eligibility for federal-aid participation has been addressed

(II) PROJECT FILES

[1] CCIS INPUT It is important that CCIS input be accurate and timely. CCIS is used by internal and external customers to monitor project changes and costs. Information on change orders (*including minor changes*) is readily accessible through a numbering process and is adequate so that everyone involved will understand the need for the change. Some key items to remember are as follows:

- Is there a clear description of the work?
- Is the origin and purpose of the change order must be entered using at least two of the reasons listed in the system?
- Was there an order, other than a signed change order, by the engineer for the contractor to proceed?
- Is there a reference any key documents in the change order file?
- Are any increases or decreases in contract time associated with the change order entered in the appropriate field enabling the *Weekly Statement of Working Days* to be automatically updated?
- For condition of award change orders, are the appropriate fields filled in to generate the change order and automatically update the condition of award items?
- Are any disclaimers included in the change order and are any agreed upon disclaimers included in the text?

Finally, entries must be made in the appropriate CCIS fields concerning whether or not the change order was avoidable and the degree to which the change adds value to the transportation system. The following definitions shall be used for these purposes:

{a} avoidable A Change Order shall be considered as "Avoidable" if the cause is under WSDOT control* and if one or more of the following are true:

- The problem could have been discovered or anticipated with a review of known information or with a reasonable effort.
- It resulted from an engineering error or omission.
- The project could have been constructed according to the contract without the change.
- Reviews of Contractor submittals were delayed beyond specification requirements.

*(e.g.: Cause is not an Act of God, was not ordered by an outside agency, etc.)

{b} value added Whether or not the change order is considered "Avoidable", an element of a Change Order adds value as long as it is not compensating for rework or delay damages resulting from an error or omission and it meets one of the following:

- There is a positive benefit/cost ratio or an improved life cycle cost.
- Completion is accelerated to the benefit of the users.
- There is a benefit to the public or the environment.
- The change is needed to meet the defined or required design service level.
- Needs of outside stakeholders are met.
- Work zone safety is improved.

Value added through change orders will often appear as a "pay now or pay later" cost. It can be seen that, if the work had been included in the original plans, the bid would have been higher (pay now) by more or less the same amount as the negotiated change (pay later).

[2] TRANSMITTAL The memorandum transmitting the change order and attachments should include an explanation in sufficient detail so that everyone involved will understand the need for the change, will see that the price is appropriate and that appropriate checks and consultations have been made. The following is a list of items to consider for inclusion in the transmittal when putting together a change order:

{a} describe the change

- what is required by contract?
- what is the change?
- how does it solve the problem?
- reason for entitlement/why is this not paid under the contract?
- is there time associated with the change?
- did the contractor concur/if not why?
- is FHWA participation appropriate?
- does the change affect COA?

{b} evolution of the change

- how did the change evolve?
- discussions with associated offices (maintenance, utilities, environmental, budget, design, etc.)
- alternatives considered
- BTA involvement
- design approval necessary
- COA substitutions authorized by State Construction Office
- approvals in accordance with the checklist/date

{c} payment

- any increase or decrease in cost
- how it was established (see equitable adjustment)?
- force account must include estimate

{d} time

- does the change impact the critical path?
- how was any change in working days established?
- note if a change in contract time affects the amount of liquidated damages

{e} prior approval

- was the change order signed prior to proceeding with the work?
- if not/verbal approval who and when

{f} attachments

- checklist
- documentation of verbal approval
- any supporting documentation needed for understanding

[3] DISTRIBUTION

{a} Region-executed When the Region (PE or Region Construction Office) has executed a change, then copies should be sent to the contractor, the State Construction Office and the State Accounting Services Office, (if necessary, the State Accounting Services Office creates and coordinates new groups in "CAPS" and "TRAINS") If the change order utilizes the "Minor Change" process, then copies of the single page document substitute for the transmittal and CCIS change order print out.

{b} Headquarters-executed If the change is executed at the State Construction Office, copies will be sent to the contractor, the Region, the State Accounting Services Office, (if necessary, the State Accounting Services Office creates new groups and/or items) and, if appropriate, to the State Bridge Office, Design and the Materials Lab.

{c} protecting the interest of the surety One area for the Project Engineer to watch is the interests of the bonding company. Consent of Surety should be required on any change order that expands the scope of the contract. It is also appropriate on any change of large value or risk. Failure to obtain consent of surety could weaken the State's protection under the bond.

1-2.4C(7) Minor Changes

(I) OVERVIEW

All contracts will have a standard item for "Minor Changes". This item will be established in every group as a calculated lump sum. Credits, debits, changes in working days and no cost changes may all be processed under the minor change method subject to the listed criteria.

(II) CRITERIA FOR USE

Keep in mind that although the change meets the criteria for using the minor change process, the Project Engineer may decide that this process is not appropriate. The use of this item is at the Region's and the Project Engineer's discretion. Also keep in mind that the limitations and approvals required by the change order checklist still apply as well as all other change order criteria not modified by this *Minor Changes* section. The Minor Changes process is limited to changes that satisfy all three of the following criteria:

- non-structural changes (checklist item #15 is no) and,
- the value of the change (credit or debit) is estimated at $5,000 or less and,
- any change in working days not greater than ten days.

(III) ENDORSEMENT

In the interest of being timely, the change order should be a tool to document agreement and not a negotiation tool back and forth. The contractor's authorized signature on the change order is desirable but not mandatory. A phone call or a verbal agreement with the project superintendent may be appropriate if payment is to be made by "Minor Changes". This may be a good discussion item at preconstruction meetings. The Project Engineer should determine when the Contractor's signature is required based on when it is in the State's best interest to document agreement prior to proceeding with a change order. Some situations that may warrant the Contractor's signature are as follows:

- The contract includes substantial incentives.
- There are mutual benefits associated with the change.
- The change might include impacts to time or other work.
- The change is proposed by the contractor.
- The change is a claim settlement.

In any case, a copy of the Minor Change must be sent to the contractor. If the contractor does not agree with the terms or conditions of a change order, the contractor is required to follow the procedure outlined in Section 1-04.5 of the *Standard Specifications*. This orders the work to proceed and puts the decision to continue negotiations in the contractor's hands as detailed in that section. The contractor is obligated to endorse, write a separate acceptance or protest as described in the specification, and a timeline is provided for these actions.

(IV) EXECUTION

Due to the criteria for the application of minor changes, the Project Engineer has the authority to execute these change orders.

(V) PAYMENT BY LUMP SUM

The negotiation of prices for payment under "Minor Changes" is intended to be the same as any other change order. The focus, as always, should be forward pricing such that the contractor controls the work and assumes the risk. However, situations occur where it makes sense to measure portions of the work in a variety of ways such as units, force account and/or lump sum. The method for establishing, measuring and monitoring the total may be by any combination of methods however, the payment will only be by a lump sum under the item "Minor Changes".

(VI) PROJECT FILES

[1] CCIS INPUT "Minor Change" change orders must

be entered into CCIS, however the required input is slightly abbreviated. Since a formal change order document as described in Chapter 1-2.4C(6) is not processed, the *Work Description* section in CCIS requiring a detailed upload of text is not required. However, the *Short Description* is required and should provide enough detail to identify the content of the "Minor Change" change order. All other information requested by CCIS, including changes to working days or COA, is required.

[2] TRANSMITTAL Under the Minor Change process, the "*Change Order - Minor Changes* form # 421-005 EF" substitutes for the transmittal included in the more formal process described above. The information on the Minor Changes form should at a minimum briefly document two key items:

- Reason for entitlement/why is this not paid by bid items.
- Any increase or decrease in cost and time and briefly how it was established.

[3] DISTRIBUTION When utilizing the "Minor Change" process, the minor change form is substituted for the change order document and the transmittal. In the case of the "Minor Change" process, it is not necessary to route the backup documentation nor a CCIS print out, as part of the distribution. A copy of the form may be used to document the payment.

1-2.4D Force Account

1-2.4D(1) General

When it is difficult to provide adequate measurement or to estimate the cost for certain items of work, force account may be used in order to pay the Contractor for performing the work. Some contract items may be set up to be paid by force account. Some change orders may require payment by force account. Section 1-09.6 of the *Standard Specifications* describes the boundaries for payment of work performed by the force account method. In any case, the purpose of force account is to fully reimburse the Contractor for costs incurred on the work. These costs may also include indirect segments, such as travel, per diem, safety training, industrial safety measures, overhead, profit and other hidden costs. The objective is to minimize the inclusion of any "contingencies" included in the contract bid in anticipation of costs that may be incurred during force account work and not reimbursed.

When work is added to the contract and is to be paid by force account, a change order will have been prepared describing the added work to be performed. The change order package will also contain an independent estimate of the cost to perform the added work. All non-standard force account items are assigned the Standard Item Number 7715.

Force account payments are typically not authorized for employees engaged in management or general supervisory work. The cost for this type of activity is presumed to be included in the Contractor's markups for overhead and profit. However a foreman or, in some cases, a dedicated superintendent devoting full time to the force account work is eligible for payment on the force account.

On projects that require the Contractor to employ trainees, these employees may be utilized in force account work.

The Project Engineer should consider a decision to direct force account work with the same degree of caution that would be applied to directing any other work on the contract. The Contractor should have the expertise to schedule the work and determine what equipment is required. In most cases, it is best that we allow the Contractor to propose the method and approach to the work. Our most effective role would be to concur or approve of the Contractor's proposal or suggest modifications to it. Before any work is performed by the Contractor on a force account basis, the inspectors should review and agree with the Contractor upon:

1. **Labor.** The classification and approximate number of workers to be used, the wage rate to be paid those workers, whether or not travel allowance and subsistence is applicable to those workers, and what foreman, if any, will be paid for by force account. This agreement will be closely tied to the development of the Labor List.

2. **Materials.** The material to be used, including the cost and any freight charges whether the material is purchased specifically for the project or comes from the Contractor's own supply. For materials representing a significant cost, or where the industry experiences fluctuations in price, the contract allows for shopping and the Contractor may be directed to obtain quotations. If time permits and the situation seems appropriate, the Project Engineer may want to do this.

3. **Equipment.** The equipment to be used including the size, rating, capacity, or any other information to indicate the equipment is proper for the work to be performed whether the equipment to be used is owned by the Contractor or is to be rented. The cost per hour for the equipment to be used. In the case of rented equipment, the Engineer may ask for competitive quotations, provided the request is made in advance and there is time to obtain them.

Payment for force account work should be made on the same timely basis as any other item of work. When money is being withheld from a progress estimate, the criteria for withholding should apply equally to all items of work, not just to force account work, because of its method of payment.

The procedure for record keeping and payment of force account work on change orders shall be the same as for contract items to be paid by force account. Separate records are to be kept for each force account whether it is an item in the original contract or established as a result of a change order.

1-2.4D(2) Payment Procedures for Force Account Work

1. **Labor.** The specifications require the Contractor to prepare and submit a "Labor List" in advance of force account work. Once approved by the Project Engineer, this list provides the hourly rate for force account calculations until a new list is approved. New lists will not be approved retroactively and calculations previously made from an approved list will not be changed when a new list is approved. If the Contractor fails to submit a list before the first force account calculations are made, then the Project Engineer will determine the rates from the best data available (payrolls on this job, payrolls on other jobs, prevailing wage requirements, union information, etc). Labor list rates will include all the pieces of wage expense — base rates, benefits, assessments, travel, with allocations shown where necessary. Examples of Labor List entries might be:

Generic Laborer (Straight Time)		**John Doe, Teamster (Overtime)**	
Basic Wage/hr	$21.36	Basic OT Wage/hr	$32.81
FICA (7.65%)		FICA (7.65%)	
FUTA (0.80%)		FUTA (0.80%)	
SUTA (5.42%) Total =	2.96	SUTA (5.42%) Total =	4.55
Indust Ins $1.01/hr	1.01	Indust Ins $1.01/hr	1.01
Benefits/Hr	5.45	Benefits/Hr	8.00
	$30.78/hr		$46.37/hr
Travel Expense		Travel Expense	
$250/40 hrs	6.25/hr	$250/40 hrs	6.25/hr
Total		Total	
		$37.03/hr	$52.62/hr
Use	$37per hr	Use	$53per hr

These examples show the rate rounded to the nearest dollar, which is permissible. If either party would prefer to use the unrounded amount, that is also acceptable. When deciding how many hours require compensation, the specification allows all hours that are a contractual obligation or are customary payments made to all employees. This means that, if a labor contract calls for 4 hours of pay for any call out, then that is a contractual obligation and the 4 hours would be eligible for reimbursement. (As always, the Contractor is expected to reassign the employees, if possible, to avoid the penalty.). In the same vein, a non-Union contractor, who has made call out payments to all employees for years, would be eligible for reimbursement for similar payments in a force account.

2. **Materials.** Materials also works from a list, but the list is generated in a different fashion. The Project Engineer provides the basic list of materials observed by the inspector. This is done in a timely manner (daily, unless the Contractor agrees otherwise). The Contractor adds prices to the list and attaches invoices or affidavits to support the prices. Once the list is returned and checked, payment can be made.

If a shipment of material is only partially consumed during the force account reporting period, the inspector may choose to include the entire amount in the first report or to estimate the amount consumed during each reporting period. The decision should be based upon the amount of the shipment, the nature and cost of the shipment and the security of the stockpile. A case of empty sandbags to be utilized throughout the winter for pollution control would adapt well to a single report, while a stockpile of galvanized conduit should probably be reported piecemeal as it is used in the work. The Contractor may use copies of the original invoice when the material is reported incrementally. If the Contractor has to restock unused material, restock charges can be reimbursed if the original order was reasonable for the work planned.

Along with supplying prices and invoices, the Contractor may suggest additions or corrections to the Materials List. These suggestions will be reviewed by the Project Engineer and, if appropriate, added before payment is made.

If the Contractor does not have an invoice, as in the case of stockpiles or some warehouse stock, then an affidavit will suffice. The Engineer may review the affidavit and, if it is an unreasonable price that cannot be supported, the Engineer may substitute another price, utilizing the best data available. The reasonableness of the price must consider the circumstances of the purchase and all costs associated with obtaining material from another source.

The specifications allow the Engineer to require competitive quotations, if this is done before the work is started and sufficient time is available. If the Contractor has to divert an employee to obtain the quotations, then that employee may be included in the labor reimbursement for the force account.

3. **Equipment.** The Project Engineer should review and comply with the rules governing payment for equipment as outlined in the most current AGC/WSDOT Equipment Rental Agreement. This agreement was developed as an interpretation of the specifications and is relatively self explanatory.

There are three methods of acquiring equipment for use on a force account. “Owned” means that the Contractor controls and operates the equipment. A long term lease arrangement would be the same as ownership. Owned equipment is priced according to the Blue Book. “Rented to Operate” means that the Contractor has obtained a piece of equipment through a short term rental and will operate that equipment with its own employees. Rented to Operate equipment is priced according to the invoice from the rental agency. “Rented Operated” means that the Contractor has obtained a service from an individual or a company to provide a piece of equipment with an operator. An operated rental is not paid as equipment, but rather as a Service. In some cases, the Service will be reclassified as an entity performing in the manner of a subcontractor (see below).

Repair of damage is considered a risk of providing equipment. The cost of this risk is assumed to be in the markup for overhead and profit. Neither costs for repair of damage nor insurance against such damage should be included in the force account direct charges. A common event is the offer of a Damage Claim Waiver by a renting agency. If such a charge appears on an invoice, it should be removed before payment is calculated.

As with Materials, the Engineer may require competitive bids for equipment rentals. Normally, this requirement must be made in advance, before the work is started. However, if the rental is not made in an “arm’s length” transaction, for example when the contractor rents the equipment to himself through some sort of business structure, then after the fact quotations may be obtained from independent rental agencies and the lowest such quotation may be used in place of the rental invoice.

Finally, as a special insertion into this Manual, there is a separate method of paying for Pavement Routers for Crack Sealing. WSDOT has agreed to set aside the Blue Book rate for this equipment and to pay $20 per hour for the operated router.

4. **Services.** Services billed by invoice will be compensated according to the invoice if that is the typical method in standard industry practice. Billing by invoice does not excuse the service provider from the requirements of the prevailing wage laws, from contract requirements for requests to sublet, or from other requirements. However, the force account payment system will not be used to enforce contract wage or other requirements. Typical industry practice might include specialized technical services, such as Testing Labs and Environmental Cleanup firms. Also included might be unit price invoices, such as Sweeping per mile or Concrete Pumping per cubic meter, or lump sum quotation invoices, such as Remove Danger Tree or Pump Septic Tanks.

The markup for services depends on the nature of the firm’s activities on the project. If the firm is clearly an uninvolved supplier, then the Service markup will apply. If the firm is acting as a subcontractor, then the markup will be made under the subcontractor provisions described below, with the underlying (subcontractor’s) overhead and profit assumed to be embedded in the invoice.

It should be noted that payment of force account work through an invoice does not excuse the Contractor from other requirements of the contract. Wage rate rules, subcontractor approvals and other provisions, while not necessarily required for force account payments, are still contract requirements and must be enforced. Note that the statutes associated with some enforcement do involve the withholding of payment for associated work.

As with materials and equipment rentals, the Engineer may require competitive bids for invoiced services. Normally, this requirement must be made in advance, before the work is started. However, if the service is not obtained in an “arm’s length” transaction, for example when the invoice comes from a subcontractor without sufficient effort to find competitive prices, then after the fact quotations may be obtained from independent service providers and the lowest such quotation may be used in place of the service invoice.

5. **Mobilization.** Mobilization and demobilization are reimbursable expenses for assembling equipment, materials, supplies and tools for any force account item and then returning those items to the previous location when the work is finished. Demobilization can include restocking costs for materials not utilized. Force account mobilization applies to original bid item force accounts as well as force accounts added through change orders. The standard bid item “Mobilization” is assumed to not include mobilization activities for force account work.

Mobilization may occur within the project limits if special efforts are required to assemble needed items to the force account location. For example, if a lowboy is required to move a bulldozer from one end of a project to the other, then that mobilization effort would be reimbursed.

If off site preparation work is needed, the Contractor must notify the Engineer in a timely enough manner that the work can be observed, if that is desired. Without such notice, that preparation work will not be reimbursed.

The AGC Agreement allows for pro-rating mobilization costs for equipment that will be used in both force account and bid item work. This will be done by negotiation and agreement. For example, if the Project Engineer and Superintendent agree that a mobilized backhoe will be used three hours on regular work for each hour on force account, then 25 percent of the mobilization costs would be paid on the force account.

All mobilization activities can be categorized as Labor, Equipment, Materials, or Services and will be listed under those categories for payment.

6. **Other Payments**

Permits or Fees

When a force account requires the Contractor to pay for permits or fees (hazardous waste dumping, etc.) that would fall outside the scope of overhead, these costs are reimbursable and may be included in the "Services" section of the force account payment.

Sales Tax

How retail sales tax is handled on the overall project depends on the ownership of the property upon which it rests. Keep in mind that a project may span more than one type of ownership.

STATE AND PRIVATELY OWNED LANDS

Work performed on state or privately owned land falls under Section 1-07.2(2) of the *Standard Specifications* and Department of Revenue Rule 170. Retail sales tax **is required** on the total contract amount. The Contracting Agency provides this payment to the Contractor to be passed through to the Department of Revenue. This is the tax noted in the summation of contract payments.

The Department of Revenue considers materials incorporated into the final work (such as concrete, signs, aggregates) to be an integral part of the completed improvement. These materials are purchased for "resale". **No tax is required** when purchasing these materials, therefore, no tax is paid as part of force account payments or as part of pricing change order work. The contractor purchases these materials as tax exempt and, in turn, sells them to the State as a part of the total project and the only tax collected is on the total contract as described previously.

There may be items that the contractor **is required** to pay sales tax on at the point of purchase. The Department of Revenue considers supplies consumed (such as concrete forms, fuel or tools, equipment purchased or rented) during the performance of the contract to be "consumables", a part of the overall cost of doing business. The contractor is required to pay retail sales tax at the point of purchase/rental for these items. These costs are bid as a part of the associated bid items.

When calculating or estimating the cost of force account or change order work, sales tax should be included in the individual invoices for "consumable" items. It's a fine line; for example, permanent striping is considered "resale" (tax exempt), temporary striping is a "consumable" (taxed). The fact that taxes are shown or not shown on invoices is not a reliable indication of what the contractor is obligated to pay. The contractor may receive reimbursement later or be required to pay additional taxes when the contract is complete. The contractor's books are audited by the Department of Revenue upon completion of each project to ensure compliance. The Project Engineer must apply these guidelines as closely as possible. Note that, in some cases, it is possible and necessary to pay a tax on a tax.

CITY, COUNTY, AND FEDERALLY OWNED LAND

Work performed on city, county or federally owned lands falls under Section 1-7.2(1) of the *Standard Specifications* and Department of Revenue rule 171. Retail sales tax **is not required** on the total contract amount.

The Contractor **is required** to pay retail sales tax on all purchases regardless of use ("consumable" or not). For contract work, this expense is incidental and therefore included in the individual contract items as a part of the bid amount.

When calculating or estimating the cost of force account or change order work, sales tax should be included on all invoices. As stated previously, the fact that taxes are shown or not shown on invoices is not a reliable indication of what the contractor is obligated to pay. The contractor may receive reimbursement later or be required to pay additional taxes when the contract is complete. The contractor's books are audited by the Department of Revenue upon completion of each project to ensure compliance.

Exceptions

Construction of the following facilities has been specifically exempted from Department of Revenue rule 171. Work on these facilities falls under Department of Revenue rule 170 even if they are on non state owned land:

- Water mains
- Sanitary sewers, if they are not a part of the road drainage system
- Telephone and telegraph lines

- Electrical power, if such power does not become a part of a street or road lighting system
- Other conduits or lines

Conclusion

Most of the time, retail sales tax on invoices is required. In turn, we need to reimburse the contractor for the tax (paid or deferred) on force account invoices and include the costs when estimating the value of change order work.

The one exception is "resale" items if the contract falls under Department of Revenue rule 170. "Resale" items under this rule do not require that retail sales tax be paid at the point of purchase.

These rules should be adhered to regardless of whether retail sales tax is shown on the invoice.

Subcontractor Markup

If work is being performed by a subcontractor (or by a service supplier acting in the manner of a subcontractor), then a supplemental markup will be added. This supplement will be added one time for each payment, even if a lower-tier subcontractor is doing the work. The markup is a graduated step down rate, which gets smaller for each force account item as the amount of work increases.

The amounts on which the rate is determined will be tracked separately for each subcontractor on each force account item included in the original contract or added by change order. If two subcontractors work on the same force account, then the accumulated total will be tracked for each, and markup for work done by each will be according to the respective total. If a single subcontractor works on two force accounts, then there will be a running total of work done by that subcontractor on each account and the markup rate for the same sub on different force accounts could be different.

1-2.4D(3) Records and Source Documents

Accurate daily time records should always be kept when performing force account work. Form 422-008, "Daily Report of Force Account Worked", is provided for the Project Engineer's use to help facilitate timely, accurate, and complete records of the daily force account activities. Whatever method of record keeping is used, it is recommended that the document be signed by both the Inspector and a representative of the Contractor agreeing on the materials used and the hours noted for labor and equipment. A copy of the daily report must be provided to the Contractor. When the work is performed by a subcontractor, a copy should also be provided to the subcontractor.

The costs for force account work should be determined and entered into the CAPS system in as timely a manner as possible.

All calculations for determining force account costs should be checked, initialed, and dated. After the cost of the work has been computed in the office, a copy of calculations shall be furnished to the Contractor.

1-2.4D(4) Summary

To summarize, the purpose of force account is to fully reimburse the Contractor for costs incurred on the work. The objective of force account administration is to minimize the inclusion of any "contingencies" included in the contract bid in anticipation of costs that may be incurred during force account work and not reimbursed.

Items which are bid or negotiated with a unit price or a lump sum agreement will not be converted to force account unless a change (as defined in Section 1-04.4 of the *Standard Specifications*) has occurred. On the other hand, any work to be done or the remaining portion of work underway on a force account basis may be converted to unit prices or a lump sum at any time the parties can reach an agreement. Such a conversion is highly desirable and should always be a goal of the Project Engineer.

1-2.4E Differing Site Conditions (Changed Conditions)

There are two types of changed conditions. The first (Type I) is a hidden condition that is different from that indicated by the contract (the borings do not show this rock). The second (Type II) is a hidden condition that is not shown differently in the contract, but is unusual and different from what a reasonably prudent contractor would expect (I've never seen this before and nobody else has ever seen it, either). In either case, to qualify for renegotiation, the condition must have a "material" affect on the cost of doing work. In other words, there must be a definable difference in the way the work will now be done and that difference must be significant.

The contractual rules included in Section 1-04.7 are related to fair notice and to giving the State an opportunity to examine the condition and, perhaps, order a different approach to the work. If the contractor takes away this opportunity, then there may be grounds for denying compensation for the different approach to the work. In some cases, the changed situation is not recognized until much or all of the work has been done. In that case, the determining factor for notice is the time when the Contractor knew or should have known of the condition. Whenever notice is served, it must be written.

In a perfect world, a changed condition will be recognized, notice will be given and work will be stopped until all the interested parties can reach agreement on how to proceed. In the real world, we are often faced with traffic closures and safety issues. Contractors work on tight schedules with one activity interdependent on others and it is not in the public interest to stop work while a changed condition discussion takes place. As soon as possible, to the extent possible, and in any manner which accomplishes the intent, the Project Engineer is expected to consult with the Region Construction Manager and the State Construction Office to obtain the approval before agreeing that a changed condition exists or before entering negotiations for price adjustments.

The Department response to a contractor's assertion of changed conditions, whether agreement or denial, must be written. The Project Engineer must keep accurate time and material records whether the response was negative or positive.

1-2.4F Termination of Contract

Contract termination is divided into two major categories, termination for default and termination for public convenience. Section 1-08.10(1) of the *Standard Specifications* defines the situations when a contract may be terminated for default (doesn't happen very often.) Section 1-08.10(2) of the *Standard Specifications* defines the situations when a contract may be terminated for public convenience.

Keep in mind that the conditions of the termination may be negotiated in the event that the termination is in the best interest of both parties. An example would be if a major change is beyond the abilities of the contractor. Negotiations with regard to conditions of the termination may include pricing partially completed items, mobilization payment, or the State taking possession of fabricated/purchased materials.

In both categories, if federal funds are involved, FHWA needs to be notified and informed of the situation early in the process. Specifically, Federal participation eligibility should be discussed prior to making a decision on termination. Formal notification and discussion should use normal channels through the Region to the State Construction Office. Authority to terminate a contract rests with the same position that had authority to execute the contract.

1-2.4G Subletting Portions of the Contract

Requests by the Contractor for subletting are submitted on Form 421-012 (Request to Sublet) and are to be approved by the Regional construction manager or designee. The request must be approved prior to the performance of any work on the project by either the subcontractor or a lower-tier sub. A copy of the Statement of Intent to Pay Prevailing Wages, executed by the subcontractor or lower-tier sub and approved by Washington State L&I, must be provided to the Project Engineer by the Contractor prior to payment for any work performed by that subcontractor or lower-tier sub. In addition, for Federal-aid projects, Form 420-004 (Contractor and Subcontractor or Lower-Tier Subcontractor Certification for Federal-aid Projects), must be submitted with the Request to Sublet.

If a subcontractor wishes to further sublet a portion of its work to a lower-tier firm, the Contractor must submit the name of the lower-tier firm along with the request to sublet the work to the subcontractor. If more than one subcontractor on a project wants to utilize the same firm as a lower-tier subcontractor, separate requests are required. Section 1-08.1 of the *Standard Specifications* sets limitations on the amount of work a lower-tier sub may perform for each subcontractor. Section 1-08.1 of the *Standard Specifications* also sets forth the procedure for subletting portions of the project, and the percentage of the contract which may be sublet. The dollar value to be used for determining the amount of work that must be performed by the Prime Contractor is the total original contract amount less the amount of any specialty items which have been subcontracted. The Project Office will enter data from the request to sublet into the CCIS database. When the Project Office is in a situation where the CCIS database is not utilized during the administration of a project and requires the "hand calculation" of the percentage of amount sublet, the percentage will be calculated for all items except specialty items, using the amount shown on the Request to Sublet or the bid amount whichever is smaller.

When Condition of Award items are sublet, ensure that the total amount is equal to or greater than the amount in the Condition of Award letter and that the Condition of Award items will be sublet to the proper Condition of Award subcontractor. If a bid item shown on the Condition of Award letter is not sublet to the proper D/M/WBE, then the request cannot be approved until the contract is changed.

1-2.4H Contractors' Shop Plans and Working Drawings

In general, all shop drawings and supplemental details submitted by the Contractor should be checked, in detail, for conformance to all contract requirements before forwarding on for approval or further actions by others. A Change Order is required for any deviation from the contract plans. Any conflicts with the contract plans that have been detected or revisions that may be desired by the Project Engineer should be noted on one copy of the drawings being forwarded to Headquarters for approval. If Change Orders to cover any deviations from the contract plans have been issued, or are being processed, those changes should also be noted.

Figure 1-6 is a list of many of the most common shop plans and drawings, and includes references to the specifications that require them and the section of this manual that covers the procedures for processing them. Use Form 410-025 to transmit all listed bridge and structure plans to the Bridge and Structures Engineer.

The Project Engineer should maintain a log of all shop plans or other drawings received for each contract.

Shop plans for items that conform to the contract plans or a standard plan, except those listed in Figure 1-6, should be checked and approved by the Project Engineer.

1-2.4I Relief of Responsibility for Completed Work and Relief of Responsibility for Damage by Public Traffic

Section 1-07.13(1) specifically designates the Contractor as being solely responsible for the completed work or material until the entire improvement has been completed. All work and material, including change order work, is at the sole risk of the contractor and when damaged must be rebuilt, repaired, or restored. When these damages occur to either

the permanent or temporary work, and have occurred prior to the contract Completion Date, the costs for these repairs shall be entirely at the Contractor's expense. However, the specification does provide the contractor exceptions for causes that are generally beyond the contractor's control.

While the Contractor is fully responsible for the work and materials, the section does provide the contractor some options for relief. Relief is broken into 2 categories. The first category being relief of maintenance and protection for portions of works that have been completed. The second category is for relief of damage caused by the public when it is necessary that the public use the facility during construction. Both options for relief have specific criteria in order to exercise them. While a brief explanation of each option is provided, the Project Engineer should review the entire section 1-07.13 of the *Standard Specifications* to ensure that the extent of responsibilities are understood and that any relief from responsibility is granted in accordance with those provisions.

Section 1-07.13(2) provides relief to the Contractor from maintaining and protecting specific portions of contract work as they are completed. The Contractor must submit a written request for relief to the Project Engineer. Before granting any relief, the Project Engineer will review the request to ensure that the items of work noted conform to the requirements and limitations outlined in Section 1-07.13(2) of the *Standard Specifications* and have been fully completed in all respects of the contract. The Regional Construction Manager or designee may approve these requests for relief. Relief may be granted for several specific items, for example: "Item 17, Beam Guardrail, Type l; Item 18, Beam Guardrail Anchor Type l; etc." Relief may also be granted for all work except certain items, for example: "All work except Item 38, Electrical." The approval of the Contractor's request must be in writing.

When it is necessary for public traffic to utilize a highway facility during construction, Section 1-07.13(3) of the *Standard Specifications* provides relief of responsibility to the Contractor for damage caused to the permanent work by the public traffic. When the conditions specified in this section are met, the Contractor is automatically relieved of this responsibility. However, this section does not provide relief for damage caused by vandalism or other causes. The Contractor will resume full responsibility for both temporary and permanent work if traffic is relocated to another section of roadway. This responsibility will again continue until contract completion unless the section is reopened to public traffic or the Contractor is granted relief under 1-07.13(2).

The first paragraph of Section 1-07.13(3) refers to damage to "permanent work". This refers to work included in the contract that is being constructed in accordance with the requirements noted in the plans and specifications and is damaged. The intent is to exclude equipment, temporary facilities and temporary materials such as formwork and falsework. Contract features such as "Temporary Traffic Barrier," are included if they have been constructed according to plan and are damaged by public traffic using an approved traffic plan.

1-2.4J Protested Work

Occasions may arise where the contract may not have fully or clearly defined a work activity or financial responsibility. In these cases, the Project Engineer may determine that, in order to avoid delay of other critical work, protect the traveling public, or other critical circumstances, it may be necessary to direct the Contractor to proceed immediately to complete the work. In some instances, this order may be against the Contractor's wishes. While acknowledging the Contractor's verbal protest, the Project Engineer should again direct the contractor to proceed with the work in accordance with Section 1-04.5 of the *Standard Specifications*. The Contractor should also be advised that, as a separate action, they should follow the guidance in this same section for protest and protest resolution. While these provisions require the Contractor to keep accurate records for completing the protested work, it is not advisable for the Project Engineer to rely on these records to determine what may have taken place when trying to verify costs for protested work many months later. In order to help document the Contractor's work, the form "Report of Protested Work" (DOT Form 422-007) was developed as a tool for the Project Engineer's use.

1-2.4K Metric Designed Projects Administered with English Standard Specifications

Some recent projects, whose plans were developed using Metric dimensions, are being administered utilizing the English version of the Standard Specifications. Any dimensions in the Standard Specifications, Amendments, or Special Provisions that are expressed in English terms are to be converted, utilizing a precise arithmetic "hard" conversion method, to equivalent Metric units, when necessary, to be compared to the contract documents, field conditions or Contractor's equipment or operations.

To accomplish the conversion to English specifications, a series of General Special Provisions have been developedto replace those Metric specifications that contain soft conversions. In all cases, the English specifications have been left intact so that, if items must be added through change order, English units may be utilized with the reference to the Standard Specifications without including all the Metric specs in the change order.

When making payment to the contractor, the project office should measure and pay for the bid item, either Metric or English, indicated as the unit of measure in the contract plan or change order. For example, if the contract calls for "Clearing and Grubbing" to be paid for by the hectare, then the engineer should instruct his crew to measure and pay for the work performed in metric units and the opposite would apply if a change order was written for the project utilizing the English specifications for clearing and grubbing, in this case the bid item would be measured and paid for by the acre.

If a situation arises when a conversion is required for an interpretation, a measurement or a payment from English Units to Metric Units, it will be converted utilizing a "hard" conversion factor. In the case of a payment, the level of precision of the factor will be such that the resulting payment will not vary from the true calculated value by more than one dollar.

1-2.5 Contract Time

1-2.5A General

The length of time allotted to the Contractor for completing the work on the contract is stated in the contract provisions. This time allotment is usually referred to in terms of working days. As a result, the guidance in this chapter pertain to contracts in which time is allotted to the Contractor on a working day basis. The provisions for progress schedules are noted in Section 1-08.3 of the *Standard Specifications*. The contract provisions may also contain requirements that add to, or supersede, all or part of Section 1-08.3.

Progress schedules should depict, in graphic form, the operations and relationships in order of performance, with sufficient detail that the progress of the work can be evaluated accurately at any time during the performance of the contract. After review and approval of the progress schedule by the Project Engineer, an approved copy should be returned to the Contractor. At a regular interval, the Project Engineer should review the approved progress schedule, comparing it to the current progress of work. When the Project Engineer determines the original or any supplemental progress schedule does not provide the information needed, a supplemental schedule may be requested from the Contractor. The contract provisions may also require supplemental or periodical progress schedules from the Contractor.

The Contractor may begin work as soon as the contract is executed and shall prosecute the work diligently until physical completion has been reached.

The Region will be notified by telephone on the day the contract is executed by WSDOT. Because it can take several days for the executed contract to reach the Contractor, the Region should immediately provide the Contractor with verbal notification of the date of execution so that the Contractor may order materials and make preparation to mobilize onto the project and begin work. The date the contractor actually begins work on the project is to be noted and entered into CCIS.

Between the execution of the contract and the acceptance by the State Construction Engineer, the Project Engineer will likely encounter one or more of several time-related issues. These include Weekly Statements of time charged, Suspensions of Work, Delays to the Work, and Time Extensions.

Contract Completion Milestones

There are four milestones that help identify when the project has been completed or is nearing completion:

- Substantial Completion — When the contract work is completed to the extent that WSDOT has full use and benefit of the facilities, and only minor incidental work remains to physically complete the total contract.
- Physical Completion — When all of the work is hysically completed on the project. Not all the documentation required by the contract necessarily needs to be furnished by the Contractor by this date.
- Completion — When all work specified in the contract is completed and all the obligations of the Contractor under the contract are fulfilled. All documentation has been submitted by the Contractor.
- Final Acceptance — When the State Construction Engineer accepts the contract by signature on the Final Contract Voucher Certification.

1-2.5B Working Day Charges

When contract time for the project is expressed in working days, the first working day will be established in accordance with Section 1-08.5 of the *Standard Specifications* or such other date as prescribed by the contract provisions. Time associated with each phase of work established in the contract is to be shown on the Weekly Statement of Working Days. The Project Engineer is to furnish a weekly statement advising the Contractor of the current status of working day charges against the contract. Weekly Statements are generated by the CCIS computer system. This statement is to be issued in accordance with Section 1-08.5 of the *Standard Specifications*. The purpose of this statement is to advise the Contractor about the Project Engineer's decision for each passing day. Was it a nonworking day, a chargeable working day or an unworkable day? In evaluating each day, the Project Engineer should take into consideration the following conditions:

1. The effect of inclement weather on critical activities.

2. The effect of conditions caused by inclement weather on critical activities.

3. Traffic restrictions imposed by the contract or the Project Engineer or other events or conditions beyond the control of the Contractor that affect a critical activity, except where the contract prevents the allowance of unworkable days for specific reasons.

If any of the above conditions prevent work or reduce the Contractor's efficiency on critical activities on the project, working day charges must be adjusted accordingly. If no work can be performed on critical activities, an unworkable day should be granted. If the Contractor is able to continue work on critical activities but the efficiency is significantly reduced, a partial day may also be charged. However, the use of partial days should be limited to the nearest one half day.

Shop Plans & Working Drawings

Working Drawing Type	Const Manual References	Standard Spec References	Number of Copies	Reviewer Prior to Approval	Approving Authority	Distributor of the Approved Drawings	Distribution (surplus copies stay @ PE)	Notes
Cofferdams and Cribs	6-1.5	2-09.3(3)D which refers to Sections 6-01.9 and 6-02.3(16)	6 sets to Bridge 2 sets to PE 4 additional sets to Bridge if RR is involved	Project Engineer & Bridge & Structures Engineer	Bridge & Structures Engineer	Project Engineer	2 sets to Contractor 1 set to Region Const	PE Stamp is Req'd
Precast Concrete Panels	None	6-02.3(28)A	7 sets to Bridge 2 sets to PE 4 additional sets to Bridge if RR is involved	Project Engineer & Bridge & Structures Engineer	Bridge & Structures Engineer	Project Engineer	1 set to State Const. 2 sets to Contractor 1 set to Fabrication Inspector	
Bridge Demolition Plans	None	None, See Special Provisions	4 sets	Project Engineer	Project Engineer	Project Engineer	2 sets to Contractor 1 set to Region Const	Bridge demolition is covered in the GSP's (02030205.GB2) PE Stamp is Req'd.
Falsework Plans	6-1.5	6-02.3(16)	6 sets to Bridge 2 sets to PE 4 additional sets to Bridge if RR is involved	Project Engineer & Bridge & Structures Engineer	Bridge & Structures Engineer	Project Engineer	2 sets to Contractor 1 set to Region Const	PE Stamp is Req'd
Forming Plans	6-1.5	6-02.3(16)	6 sets to Bridge 2 sets to PE 4 additional sets to Bridge if RR is involved	Project Engineer & Bridge & Structures Engineer	Bridge & Structures Engineer	Project Engineer	2 sets to Contractor 1 set to Region Const	Section 6-02.3(16) notes that plans are not required for walls under 8 foot in height or for footings PE Stamp is Req'd
Plans for Hydraulic Items	7-2	None	7 sets	Project Engineer & Hydraulic Engineer	Hydraulic Engineer	Project Engineer	2 sets to State Hydraulic Section 2 sets to Contractor	
Roadside Plant/Weed Control Plan	None	8-02.3(2)	4 sets	Project Engineer	Project Engineer	Project Engineer	2 sets to Contractor 1 set to Region Const.	
Shop Plans for Luminaire and Traffic Signal Poles & Metal Bridge Rail	8-20.2B	8-20.2(1)	6 sets	Project Engineer & Bridge & Structures Engineer	Bridge & Structures for light standards and Types II, III, IV, V and SD signal standards. Project Engineer for Types PPB, PS, and I signal standards shown on Standard Plan J-7a.	Project Engineer	2 sets to Contractor 2 sets to Fabrication Inspector	Shop drawings are only required for signal and light standards without pre-approved plans.
Post-Tension Details	6-2.8	6.02.3(26)A	7 sets to Bridge 2sets to PE	Project Engineer & Bridge & Structures Engineer	Bridge & Structures Engineer	Project Engineer	1 set to State Const. 2 sets to Contractor 1 set to Region Const.	

Figure 1-6
(page 1 of 2)

Shop Plans & Working Drawings

Working Drawing Type	Const Manual References	Standard Spec References	Number of Copies	Reviewer Prior to Approval	Approving Authority	Distributor of the Approved Drawings	Distribution (surplus copies stay @ PE)	Notes
Cofferdams and Cribs	6-1.5	2-09.3(3)D which refers to Sections 6-01.9 and 6-02.3(16)	6 sets to Bridge 2 sets to PE 4 additional sets to Bridge if RR is involved	Project Engineer & Bridge & Structures Engineer	Bridge & Structures Engineer	Project Engineer	2 sets to Contractor 1 set to Region Const	PE Stamp is Req'd
Precast Concrete Panels	None	6-02.3(28)A	7 sets to Bridge 2 sets to PE 4 additional sets to Bridge if RR is involved	Project Engineer & Bridge & Structures Engineer	Bridge & Structures Engineer	Project Engineer	1 set to State Const. 2 sets to Contractor 1 set to Fabrication Inspector	
Bridge Demolition Plans	None	None, See Special Provisions	4 sets	Project Engineer	Project Engineer	Project Engineer	2 sets to Contractor 1 set to Region Const	Bridge demolition is covered in the GSP's (02030205.GB2) PE Stamp is Req'd.
Falsework Plans	6-1.5	6-02.3(16)	6 sets to Bridge 2 sets to PE 4 additional sets to Bridge if RR is involved	Project Engineer & Bridge & Structures Engineer	Bridge & Structures Engineer	Project Engineer	2 sets to Contractor 1 set to Region Const	PE Stamp is Req'd
Forming Plans	6-1.5	6-02.3(16)	6 sets to Bridge 2 sets to PE 4 additional sets to Bridge if RR is involved	Project Engineer & Bridge & Structures Engineer	Bridge & Structures Engineer	Project Engineer	2 sets to Contractor 1 set to Region Const	Section 6-02.3(16) notes that plans are not required for walls under 8 foot in height or for footings PE Stamp is Req'd
Plans for Hydraulic Items	7-2	None	7 sets	Project Engineer & Hydraulic Engineer	Hydraulic Engineer	Project Engineer	2 sets to State Hydraulic Section 2 sets to Contractor	
Roadside Plant/Weed Control Plan	None	8-02.3(2)	4 sets	Project Engineer	Project Engineer	Project Engineer	2 sets to Contractor 1 set to Region Const.	
Shop Plans for Luminaire and Traffic Signal Poles & Metal Bridge Rail	8-20.2B	8-20.2(1)	6 sets	Project Engineer & Bridge & Structures Engineer	Bridge & Structures for light standards and Types II, III, IV, V and SD signal standards. Project Engineer for Types PPB, PS, and I signal standards shown on Standard Plan J-7a.	Project Engineer	2 sets to Contractor 2 sets to Fabrication Inspector	Shop drawings are only required for signal and light standards without pre-approved plans.
Post-Tension Details	6-2.8	6.02.3(26)A	7 sets to Bridge 2sets to PE	Project Engineer & Bridge & Structures Engineer	Bridge & Structures Engineer	Project Engineer	1 set to State Const. 2 sets to Contractor 1 set to Region Const.	

Figure 1-6
(page 2 of 2)

Section 1-08.5 also allows the Contractor to protest working day determinations and working day charges determined by the Engineer. In the event the Contractor submits the required written protest within 10 calendar days following the date of the statement, the Project Engineer will analyze the decision made, identify any discrepancy, and immediately respond to the Contractor by either denying the protest or transmitting a revised Weekly Statement of Working Days.

The Project Engineer will complete Weekly Statements of Working Days throughout the course of the project, showing both workable and unworkable days as they occur. These statements will continue to be completed until the project has reached Substantial Completion and the Working Days assigned to the contract have been exhausted. Following are the three possible scenarios:

- The working days are exhausted prior to reaching Substantial Completion. Weekly Statements of Working Days continue until Substantial Completion.
- The working days are exhausted on the day Substantial Completion is achieved. Weekly Statements of Working Days cease upon Substantial Completion.
- The working days are not exhausted upon reaching Substantial Completion. Weekly Statements of Working Days continue until the working days are exhausted or until physical completion.

With both these milestones reached, preparation of Weekly Statement of Working Days may stop. When Substantial Completion has been achieved the Project Engineer will ensure that the date is entered into CCIS and is also noted on the remaining Weekly Statements of Working Days.

When contract time is expressed in calendar days, the contract provisions should also be reviewed for guidance in the charging of contract time.

1-2.5C Suspension of Work and Delay

When, in the judgment of the Project Engineer, inclement weather, or conditions caused by inclement weather, make it impracticable to achieve satisfactory results on a critical item of work, an order should be issued to suspend the affected portions of the contract work or the entire project. If at all possible, suspensions for weather should be made with the concurrence of the Contractor. If the Contractor does not agree to a weather suspension, the Project Engineer should consult with the Region Construction Manager before issuing a unilateral suspension.

In addition, subject to the agreement of the Contractor and the approval of the Regional construction manager, delays caused by other conditions beyond the control of the Contractor may also warrant an order to suspend work.

Short suspensions of less than a week may be shown as unworkable days on the current Weekly Statement of Working Days. If the suspension is of longer duration, for example during a winter shutdown, the publication of Weekly Statements may also be suspended. Notices to suspend or resume work should be written. Forms 421-006 and 421-007 have been developed for this purpose and may be used. A letter will accomplish the same purpose. If it is determined that some items of noncritical work on the project could be continued unaffected by weather conditions, then those items can be excluded from the order to suspend work. The prime consideration for unworkable days or suspensions is always the ability to work on critical items.

In the event that a suspension of work for weather or for other reasons beyond the control of the contractor is necessary for an extended period of time, the Project Engineer may recommend that the Contractor be relieved of routine maintenance during the period of suspension. Before WSDOT will assume the responsibility for maintenance, the Contractor must have taken all necessary actions to control erosion, pollution, and runoff prior to, and during, the shutdown period. The extent of the project area that will be maintained by WSDOT is the subject for a three party negotiation and agreement among the Project Engineer, the Maintenance Superintendent and the Contractor.

Section 1-08.6 of the *Standard Specifications* provides that the Contractor may be entitled to compensation and/or time extensions if a delay is caused by WSDOT or, in some cases, when the delay is caused by an outside party. Anytime that a project is delayed for any cause, the Project Engineer and the Contractor should consider methods of mitigating the delay damage. A common approach is to pursue schedule recovery or acceleration of the work to get the project back on schedule. When the Project Engineer suspects that the State may be responsible for the delay, then compensation for the mitigation efforts may beproposed.

The suspensions described above are related to weather or other causes beyond the control of the Contractor. They apply only to critical work items and, therefore, always result in a determination of an unworkable day. If the Engineer and the Contractor agree to stop working on a noncritical item for one of these causes but to continue critical work, then the agreement should be noted in the records and weekly statements should be issued in the normal fashion.

The contract also gives the Engineer the right to suspend work on any part of the project when the Contractor is not complying with the contract's terms or the orders of the Engineer. This would be a significant action and, except in an emergency situation, should not be undertaken without the full and informed consent of the Region Construction Manager. It is highly recommended that the State Construction Office also be consulted. If work is suspended under this contract provision, then weekly statements and the charging of workable days will continue in the normal fashion.

1-2.5D Extension of Time

Time extensions are appropriate whenever the critical work is interrupted by a cause that is the responsibility of WSDOT. Time extensions may be related to increases in quantities, to changes in the work or to delays that are the responsibility of WSDOT. In all cases, the increase, change or delay must extend the project duration or an extension is not appropriate.

The contract requires the Contractor to request time extensions within 10 days after the delay occurs. If a delay has been identified, the Project Engineer should enforce this provision. It is acceptable to agree to change order language that defers the discussion of time to a later date. If the delay doesn't occur at an identifiable time (as in the case of a significant overrun of a critical item), then the time extension discussion will probably take place when the final outcome is recognized. Before discussing a time extension for which adequate notice was not given, the Project Engineer should discuss the situation with the Region Construction Manager seeking guidance. It is very important to recognize extended project duration as soon as possible. The Contractor should be encouraged to identify potential time extensions and bring them to the State's attention at the earliest opportunity. If possible, all time associated with an overrun would be addressed in a change order responding to Section 1-04.6. All time associated with added work would be addressed in the change order adding the work and all delay initiated time extensions would be resolved as soon as the delay was noted and State responsibility established. It would be appropriate to act unilaterally to address time if the contractor avoids the discussion.

If these time issues are not addressed concurrently with the work issues, then a time discussion will be necessary at the time of project closeout, prior to the presentation of the Final Contract Voucher.

The State has a responsibility to inform the Contractor's surety whenever increased time is being considered and the current extension, combined with previous extensions, would exceed 20% of the original allotted time in the contract. This information could be represented by the Surety's signature on the change order that adds time, by a separate letter from the Surety, or by a notice letter direct to the Surety office. Such notice and surety consent is a legal requirement and will help maintain the State's rights to be protected by the performance bond.

Any time extension will be documented either in a change order with approval levels defined in Section 1-2.4C of this Manual or in a letter to the Contractor from the State Construction Office.

1-2.5E Substantial Completion

Substantial Completion may be granted when only minor, incidental items of work, replacement of temporary facilities or correction or repair remain in order to physically complete the contract. In determining Substantial Completion, the Project Engineer should consider whether or not:

- The public has full use and benefit of the facility.
- Major safety features are installed and functional, including guardrail, striping, and delineation.
- Illumination, if required, is installed or a temporary system with equal functional capabilities is operating.
- Signals, if required, are installed or a temporary system with equal functional capabilities is operating.
- The need for temporary traffic control on a regular basis has ceased. Only minor traffic restrictions will be needed for the remaining work.
- The traffic is operating in its permanent configuration.

The Project Engineer is responsible for determining the Substantial Completion date. When this has been done, the Contractor will be notified by letter, specifically noting the date on which Substantial Completion was achieved.

1-2.5F Date of Physical Completion

The date on which the Project Engineer determines that all physical work has been completed is noted and then established as the date of Physical Completion. The Project Engineer will immediately notify the Contractor by letter of the date determined for Physical Completion. Copies of the letter will be sent to:

- The State Program Management Office.
- The Railroad companies, if applicable.
- The State Accounting Services Office.
- The Regional Local Programs Engineer on all city and county projects.
- The State Roadway Data Office, MS 47380.
- Any other distribution that the Region deems appropriate.

Actions the Project Engineer should consider taking once Physical Completion has occurred include:

- Initiate a discussion of contract time.
- Identify any unresolved disputes and initiate discussions.
- Initiate a full review of item quantities, seeking contractor concurrence.
- Initiate a final review of materials documentation.
- On Federal-aid projects, initiate a Stewardship Final Inspection.

1-2.5G Liquidated Damages

Liquidated Damages must be resolved before the final estimate can be completed and processed. Guidance for assessing Liquidated Damages can be found in Section 1-08 of the *Standard Specifications,* and in some cases, in the contract provisions.

Any withholding or assessment made against the Contractor's payments, is to be preceded by a fair notice written communication to the contractor. For those issues that could be remedied with actions taken or initiated by the Contractor, this notice should also include a reasonable period of time that will allow the contractor to take action to mitigate or completely avoid the withholding or assessment.

The term "withhold" refers to a temporary deduction shown on a progress estimate. The term "assess" refers to a permanent deduction that could be shown on a progress estimate, but will be shown on the final estimate. Liquidated damages fall into two categories — one deals with contract time and the other deals with miscellaneous provisions such as ramp or lane closures. These two categories are described below.

1-2.5G(1) Contract Time Liquidated Damages

Section 1-08.9 of the *Standard Specifications* (and, at times, the contract provisions) establishes the amount of Liquidated Damages to be assessed the Contractor for overruns in contract time. These assessments are either: (1) the formula calculated liquidated damages, or the liquidated damages prescribed by the contract provisions; or (2) the direct engineering and related costs. All temporary withholding or final assessment of these Liquidated Damages are to be shown as a below the line "Liquidated Damages" deduction on progress estimates and the final estimate.

The State Construction Engineer has not subdelegated to the Region the authority to assess time related damages on progress estimates or the final estimate. However, the authority to withhold below the line "Liquidated Damages" on progress estimates has been subdelegated to the Regions, and may be further subdelegated to the Project Engineer. See Section 1-3.1B(5) of this manual. Liquidated Damages should be addressed whenever it is apparent that the number of working days provided in the contract will be used before Substantial Completion. It is emphasized once again that fair notice and communication is necessary as a legal requirement.

In some cases, there are legitimate reasons for time extensions which would preclude withholding liquidated damages on progress estimates. If the Project Engineer is aware of or anticipates a possible time extension that would preclude withholding liquidated damages on progress estimates, the Region and/or the State Construction Office should be consulted for guidance. If the Project Engineer determines that withholding of liquidated damages on progress estimates would not be appropriate, the reasons for not withholding are to be documented by a memorandum to the files. The following describes the procedures for addressing contract time related liquidated damages in the various stages or phases of the project:

- Phases (Interim Physical Completion Dates). Liquidated damages for phases will be shown in the special provisions. When the contract includes additional phases, and the time for physical completion of a phase has overrun, the overrun should be resolved as it occurs. This involves the Contractor either being granted an extension of time or being assessed liquidated damages by the State Construction Office.
- After Substantial Completion Date of the Contract. If substantial completion is granted after the expiration of contract time the formula for liquidated damages in Section 1-08.9 of the *Standard Specifications* will be assessed for that period of time between the expiration of contract time and the substantial completion date. Liquidated damages assessed after the date of substantial completion will be only those costs identified as Direct Engineering and related costs that have been incurred by WSDOT. The direct engineering and related costs are defined as field engineering and inspection time charges plus any vehicle, travel pay, per diem, or other charges connected with the delayed contract physical completion. Engineering costs such as computing grades, quantities, etc. which would have been incurred by WSDOT under normal conditions should not be included in the determination of direct engineering and related costs. If substantial completion is granted on or prior to the expiration of contract time, direct engineering costs will only be assessed for that period of time between the date contract time expired and the physical completion date.
- Before Physical Completion. If Substantial Completion has not been established, the formula for Liquidated Damages in accordance with Section 1-08.9 of the *Standard Specifications*, will be assessed for that period of time between the expiration of contract time and the Physical Completion date.

Working days added to the contract by time extensions when time has overrun shall only apply to the days on which Liquidated Damages or Direct Engineering have been charged, such as:

- If Substantial Completion has been granted prior to all of the authorized working days being used, then the number of days in the time extension will eliminate an equal number of days on which Direct Engineering charges have accrued.
- If the Substantial completion date is established after all of the authorized working days have been used, then the number of days in the time extension will eliminate an equal number of days on which Liquidated Damages or Direct Engineering charges have accrued.

1-2.5G(2) Miscellaneous Liquidated Damages

The contract provisions may provide for assessment of other liquidated damages, such as failure to open traffic lanes within the prescribed time or failure to open ramps within the prescribed time. Any temporary withholding or final assessment of these liquidated damages shall be shown as a below the line "miscellaneous" deduction on progress estimates and the final estimates. The State Construction Office has subdelegated the authority to the Regions to withhold and assess these types of liquidated damages on progress estimates and the final estimate. The Project Engineer shall notify the Contractor in writing when these types of liquidated damages are to be assessed.

1-2.5H Completion Date

Immediately after the Physical Completion date has been established, the Project Engineer is to notify the Contractor of all outstanding documents that are required in order to establish a project Completion Date. Once all the obligations of the contract have been performed by the Contractor, the Project Engineer will provide the Contractor written notice of project completion, identifying the Completion Date established for the contract.

In order for the project Completion Date to be established, all the physical work on the project must be completed, and the Contractor must have furnished all documentation required by the contract, contract provisions, and the *Standard Specifications*. This includes the signed Final Contract Voucher Certification. (Note: Establish the Completion Date as soon as the last item of paper work is received. The final estimate does not have to be processed in order to establish the Completion Date.) The notice to the Contractor should be prepared and mailed on the same day that is designated as the completion date. A copy of the completion letter must be faxed to the contract payments section of the State Accounting Services Office, (fax number (360)705-6804) on the day the letter is written.

If the Contractor refuses, or is unable to return, a signed FCVC or any of the required documents, the Project Engineer, the Region and the State Construction Office can work together to move the project towards closure by establishing a unilateral completion date allowing WSDOT Acceptance of the contract. See Chapter 1-3.1D for Unilateral Acceptance procedures.

1-2.6 Enforcement of Wage Rate Requirements

1-2.6A General Instructions

Section 1-07.9 of the *Standard Specifications* outlines prevailing wage responsibilities for the Contractor, subcontractors, lower-tier subcontractors, agents or any other persons performing work under the contract. Additionally, contracts financed in whole or in part with federal funds have the *Required Contract Provisions for Federal-aid Construction Contracts* (FHWA-1273) included in the contract documents. These provisions identify additional federal wage requirements.

Contracts that are financed by either state or federal funds, or both, will include specific Hourly Minimum Wage Rates and Fringe Benefit schedules from either or both the Washington State Department of Labor and Industries (State L&I) and the United States Department of Labor (USDOL). When both state and federal funds are involved and there is a difference between the two prevailing wage determinations, the Contractor, subcontractors, and lower-tier subcontractors must pay a wage of not less than the higher of the two in order to remain in compliance with both prevailing wage laws. Comparisons that are made between state and federal wage rates must include their corresponding fringe benefits as identified in their respective state or federal wage determinations.

1-2.6B Monitoring of State Requirements

The requirements for the Contractor's compliance with State prevailing wages are noted in Section 1-07.9 of the *Standard Specifications*. Specific wage rate determinations for State prevailing wages are noted in the contract itself. Though certified payrolls can be requested regardless of the contract's source of funds, these are a specific requirement or enforcement of federal wage laws only and are not normally used for monitoring of State prevailing wage issues.

Requirements for State prevailing wages include:

- Section 1-07.9 requires that the Contractor submit a *Statement of Intent to Pay Prevailing Wages* (SI) prepared on the State L&I form and approved by that agency. Statements are required for the Contractor and for each subcontractor, agent and lower-tier subcontractor. The specification requires that no progress payments be released to the Contractor for work completed by the Contractor, or for portions of work completed by subcontractors, agents or lower-tier subcontractors prior to the Project Engineer's receipt of the approved statement for the entity performing the work. State L&I will approve the statements and further certify that the documents meet the requirements of State laws.
- After the project has been accepted by WSDOT, the Contractor, all subcontractors, and all lower-tier subcontractors must submit an *Affidavit of Wages Paid* (AWP) prepared on the State L&I form and approved by that agency. (The form may be submitted earlier by a subcontractor or lower-tier subcontractor should that firm's work be completed prior to acceptance.) It is the Contractor's responsibility to obtain and provide all AWP to the Project Engineer for all subcontractor and lower-tier subcontractors performing work on the project. In the event a subcontractor or lower-tier subcontractor cannot or will not provide a completed AWP form, the Contractor should consult or seek guidance from State L&I. Failure to provide all required AWP for all contractors who worked on the project will result in continued withholding of the prime Contractor's retained percentage.

- A contractor or subcontractor may enter into an agreement with his or her employees to work 10 hours per day without having to pay overtime. This is provided that no employee work more than 4 calendar days a week.
- State L&I has also defined "Contractor" to include some fabricators or manufacturers who produce nonstandard items specifically for use on the public works project. Additionally some companies who may contract with the Contractor, subcontractors, or lower-tier subcontractors for the production and/or delivery of gravel, concrete, asphalt, or similar materials may perform activities that cause employees of these firms to be covered by state prevailing wage laws.

  Specific circumstances that may cause employees of theses firms to be covered by State prevailing wage laws are described in State L&I publications. These publications are included in the provisions of each contract adjacent to the State Prevailing Wage listings. Where these firms are covered by State prevailing wage laws, an approved *Statement of Intent to Pay Prevailing Wages* and *Affidavit of Wages Paid* must be submitted to the Project Engineer on State L&I forms.

The Project Engineer should monitor the Contractor's efforts in regards to state prevailing wages by:

- Monitoring to ensure an approved Statement of Intent is received prior to releasing any progress payments for work completed by the Contractor, subcontractor or lower-tier subcontractors as well as any fabricators or suppliers of materials whom L&I may also determine as being covered.
- Monitoring to ensure that Affidavits of Wages Paid have been received for the Contractor as well as each subcontractor or lower-tier subcontractor who performed work on the contract. In addition, AWP are also required of each fabricator or supplier who was also covered by state prevailing wages.
- Monitoring by observing concerns of employees of the Contractor, subcontractors, or lower-tier subcontractors. In particular, the Project Engineer should note any employee complaints regarding specific state prevailing wage violations by the employer.

In the event the Project Engineer identifies or receives a complaint from any employee of the Contractor regarding improper application or nonpayment of state prevailing wages, or improper application of overtime pay, the Project Engineer should immediately notify the Contractor requesting prompt corrective action. All issues of noncompliance involving either the Contractor, subcontractor, and any lower-tier subcontractors are to be addressed through the Prime Contractor for resolution.

Once the Contractor has been informed that an apparent violation of state prevailing wages has occurred, it is expected that a satisfactory correction or explanation will be made within a reasonable period of time. If this does not happen, the Project Engineer should inform the Contractor that the matter may be referred to the Washington State Department of Labor and Industries (L&I) for further action. If the failure to act continues, the Project Engineer should refer the issue to the Region Construction Manager.

Except as noted for missing Statements of Intent, routine monthly progress payments made to the Contractor for work completed should not be deferred for enforcement of state prevailing wage laws. The State Construction Office will refer the matter to State L&I for further investigation that may be appropriate. Should State L&I choose to investigate, L&I will establish the amount of any unpaid wages due employees of the contractor. In order to recover these wages for employees, L&I may choose to file a claim against the Contractor's retainage held under the contract. State L&I may also choose to recover unpaid wages by requesting that the Project Engineer withhold funds from monthly progress estimates for work completed by the Contractor.

1-2.6C Enforcement of Federal Prevailing Wage Provisions

In addition to the requirements of Section 1-07.9 of the *Standard Specifications,* all contracts financed with Federal-aid funds include the *Required Contract Provisions for Federal-aid Construction Contracts* (FHWA-1273). These provisions identify federal wage requirements. The federal prevailing wage requirements included in these provisions are also commonly referred to as Davis Bacon and Related Acts (DBRA). It is the responsibility of the Project Engineer to both monitor and enforce these provisions to the degree necessary to ensure full compliance. In order to comply with these requirements, the Contractor must:

- Submit weekly certified payrolls to the Project Engineer for themselves, each subcontractor, and each agent or lower-tier subcontractor. These consist of copies of weekly payrolls along with a signed Statement of Compliance.
- Post wage rate posters.
- Post the wage determinations of the United States Secretary of Labor. These determinations consist of the listing of Federal Wages that are included in the provisions of each contract.
- Allow interviews of employees during working hours by authorized representatives of WSDOT, the Federal Highway Administration, and the U.S. Department of Labor.

The prime Contractor is ultimately responsible for all subcontractor, agent, or lower-tier subcontractor compliance with the requirements for federal prevailing wages.

1-2.6C(1) Federal Prevailing Wage Rates

The Contractor must post the federal wage determination, consisting of the wage listing included in the contract provisions, in a prominent place where it can easily be seen by workers. Standard posters (forms FHWA 1495 and FHWA 1495A) are also to be posted and are available to the Region from the Support Services Supervisor, FHWA, Olympia, Washington. Form FHWA 1495A is printed in Spanish and is to be posted when the project is in an area where there is a possibility that some workers may only speak Spanish.

1-2.6C(2) Certified Payroll Inspection

The "Contract Provisions for Federal-Aid Construction Contracts" (FHWA-1273) require the Contractor, subcontractors, agents or lower-tier subcontractors to submit certified payrolls. These are to be checked by the Project Engineer to ensure the required information has been included and is correct. The Project Engineer should accomplish this by making a complete check of the first payroll submitted on the project by the Contractor, each subcontractor, and each lower-tier subcontractor. Once satisfied that these first payrolls are correctly prepared, subsequent payrolls for that project may be accepted by a random spot checking of approximately 10 percent of the payrolls submitted. If errors are found during any spot-check of the payrolls, a more complete or thorough check should occur until the Project Engineer has determined that the errors detected have been corrected and monitoring can be returned to a spot checking basis. The *Contract Provisions for Federal-Aid Construction Contracts* (FHWA-1273) identify the required items to be included in certified payrolls. A complete payroll inspection by the Project Engineer should confirm that the following items are present:

- The contract number and contract name noted on the payroll form, together with the payroll number and payroll period. The name of the employer, identifying the Contractor, subcontractor, or lower-tier subcontractor, must be shown.
- A specific minimum wage rate is to be identified for each worker. The *Standard Specifications* require the Contractor to use word descriptions for the labor classifications that are included in the contract provisions identifying federal wage rates, and are to be used on all payrolls. Section 1-07.9 of the *Standard Specifications* permits the Contractor to use an alternative method to identify or correlate the labor descriptions used in order that they may be compared to the contract provisions.
- Each employee's Social Security number and permanent address must appear on the first payroll on which their name appears, or on a separate list attached to the payroll. Changes in address must be reported.
- Payroll deductions must conform to the "Anti-Kickback" Act noted in the *Required Contract Provisions for Federal-aid Construction Contracts* (FHWA-1273). If payroll deductions are questionable, contact the State Construction Office for assistance.
- Every laborer or mechanic working on the contract must be classified for the proper minimum prevailing wage in accordance with the designated wage determination. If a classification of worker is used that does not appear in the contract special provisions, Section 1 07.9 of the *Standard Specifications* makes it the Contractor's responsibility to contact the U.S. Department of Labor for a determination of the proper wage rate. The *Required Contract Provisions for Federal-aid Construction Contracts* (FHWA-1273) provides a method for resolving this.
- All payrolls must have a statement of compliance signed and in the form prescribed by Section V of the *Required Contract Provisions Federal-aid Construction Contracts* (FHWA-1273).
- The Contractor, subcontractor, or lower-tier subcontractor, in accordance with the requirements of DBRA, must certify all payrolls. This certification contains four elements:
    - That the payroll copy furnished is a true copy;
    - That the payroll is correct and complete;
    - That the wage rates contained therein are not less than those determined by the Secretary of Labor, and that the classification set forth for each laborer or mechanic conforms with the work being performed; and
    - That the appropriate fringe benefits due each employee have been paid in full.

Subcontractors and lower-tier subcontractors are required to submit payrolls through the Prime Contractor to the Project Engineer. Any payrolls which do not comply fully with the requirements outlined above must be corrected by a supplemental payroll.

1-2.6C(3) Employee Interviews

The Project Engineer must conduct periodic employee interviews. The purpose of these spot interviews is to establish, with reasonable certainty, that the provisions for federal prevailing minimum wages are being complied with and that there is no misclassification of workers or disproportionate employment of laborers, helpers, or apprentices. The occupation description must be shown on the form used for the employee interview noted under current duties. The occupation description is noted in the wage listing included in the contract provisions.

Some employees may refuse to reveal their rate of pay. This is acceptable and should be noted in the remarks column. Many employees do not know or may guess at the rate. If possible, a determination of the accuracy of the stated rate should be made, and any uncertainty noted in the remarks column to reduce the need for follow up interviews. If either the stated rate (from the employee) or the record rate (from the certified payroll) is below the minimum rate (from the contract wage listing), an investigation by the Project Engineer must be conducted. The investigation may

be as simple as a follow up interview with the employee or a more in depth investigation may result in a requirement for a supplemental payroll. In any event, the matter must be resolved so that the employee interview report describes what corrective action was taken to ensure that the employee has been paid the minimum prevailing wage rate. This corrective action is to be reported under remarks on the form or by attached memo if more space is needed. All discrepancies found must be resolved.

The frequency and extent of these interviews should be sufficient to ensure a representative sampling has been made for all classes of workers employed on the contract. A minimum sampling should include employees of the Contractor and all major (30 percent or more of the contract dollars) subcontractors. The interviews should be made with such frequency as may be necessary to ensure compliance. Employee Interview Report, Form 424-003, is used to record and report interviews.

1-2.6C(4) Complaints

Any complaints regarding violations of minimum wage rate regulations should be referred to the Project Engineer by employees of the Contractor, subcontractor, or lower-tier subcontractors, should be treated as confidential, and should be promptly investigated by the Project Engineer. If there are questions regarding complaints and the application or interpretation of the federal prevailing wage provisions, the Project Engineer should consider referring the issue to the Region Construction Manager or contacting the State Construction Office for further assistance.

1-2.6C(5) Federal Prevailing Wage Violations

In the event the Project Engineer identifies or receives a complaint from any employee of the Contractor regarding improper application or nonpayment of federal prevailing wages, improper application of overtime pay, or any other requirement noted in the *Required Contract Provisions for Federal-aid Construction Contracts* (FHWA-1273), the Project Engineer should immediately notify the Contractor requesting prompt corrective action. All issues of noncompliance involving either the Contractor, subcontractor, and any lower-tier subcontractors are to be addressed through the prime contractor for resolution.

If the Project Engineer determines the Contractor is in violation of the provision noted in the FHWA 1273 or Section 1-07.9 of the *Standard Specifications*, the Contractor should be immediately informed and requested to make the necessary corrective actions. Once the Contractor has been informed that an apparent violation has occurred, it is expected that a satisfactory correction or explanation will be made within a reasonable period of time. If this does not happen, routine monthly progress payments made to the Contractor for works completed, may be deferred by the Project Engineer for enforcement of these provisions. If the failure to act continues, the Project Engineer should refer the issue to the Region Construction Manager.

1-2.6C(6) Department of Labor Investigation

The U.S. Department of Labor may investigate compliance with the DBRA and the Contract Work Hours and Safety Standard Act (CWHSSA) when conducting any investigations relative to compliance with the Fair Labor Standards Act or any other acts under its enforcement authority. Investigative action taken by the U.S. Department of Labor with respect to DBRA and CWHSSA do not, in any way, change the degree of authority or responsibility of WSDOT for enforcement of these Acts. Any actions taken by the U.S. Department of Labor should be considered as services we may use to assist us in our enforcement activities but, should not be considered to relieve us of our basic responsibility to investigate fully all potential violations and to apply such sanctions as are deemed applicable under our enforcement authority to ensure compliance.

1-2.6C(7) Fraud Notice Poster

Fraud Notice, FHWA 1022, Title 18 USC 1020, must be displayed on all Federal-aid projects during the course of the work. This notice points out the consequences of any impropriety on the part of any contractor or WSDOT employee working on the project.

1-2.7 EEO, D/M/WBE and Training

1-2.7A Overview

Recent changes in both State and Federal laws have required a variety of guiding requirements. As a result individual contracts may have different guiding requirements depending on what laws were in place at the time the contract was executed and how the project is funded. The special provisions, *Standard Specifications*, and amendments determine the specific requirements for each project. The *Construction Manual* is one of many resources available for general information on the obligations and policy of WSDOT with regard to external civil rights. Other resources include:

1. Office of Equal Opportunity (OEO): OEO monitors, maintains, and updates WSDOT Equal Employment Opportunity (EEO) policies and commitments to FHWA. As part of that effort they maintain the following documents which are available through the OEO homepage:

- Equal Employment Opportunity Compliance Program (EEO and On the Job Training)
- Disadvantaged Business Enterprise Participation Plan (contract goals, if included in a project, will be mandatory)
- Title VI Plan (nondiscrimination)

2. *Standard Specifications*, as follows, apply to all projects:

- 1-07.11 Requirements for Nondiscrimination
- 1-08.1 Subcontract Completion and Return of Retainage Withheld

3. General Special Provisions as may be included in the contract include:

- Minority and Women's Business Enterprise (MWBE) Participation (included in projects financed with only State funds)
- Requirement for Affirmative Action to Ensure Equal Employment Opportunity (included in projects with FHWA participation)
- Disadvantaged Business Enterprise Participation (included in projects with FHWA participation)
- Special Training Provisions (included in projects with FHWA participation and only if the contract is selected for training)
- Indian Preference and Tribal Ordinances (TEROs) (only if the project includes work on the reservation and only if the ordinances exist)

While some requirements and provisions apply to all projects, others apply to projects with State funds only and others yet apply to projects that are partially or fully financed with Federal funding.

1-2.7B EEO (Federally Funded Projects)

WSDOT has committed to FHWA to perform comprehensive construction compliance reviews to ensure that the requirements of Section 1-07.11 have been adhered to. This review is performed by the OEO on a selected number of FHWA funded projects and may take place at any point during the life of the project or after the project has been completed. A contractor that found in violation of the contractually required affirmative action good faith efforts will be invited to a compliance conference to develop a corrective action plan. Failure to accept and comply with a corrective action plan may result in sanctions. The records that have been maintained at the Contractor's office will be utilized for these reviews. The FHWA also retains the authority to review the Contractor's records for EEO compliance. These reviews do not normally involve the project office other than notification of their occurrence and the resulting findings.

1-2.7B(1) Prompt Return of Retainage to All Subcontractors

As a condition of receiving Federal funding, WSDOT is required to ensure prompt payment to all subcontractors on all contracts regardless of funding. State statutes (Revised Code of Washington, RCW) pertaining to prompt pay require that the contracting agency make prompt payment to the prime contractor and that the prime contractor, in turn, pass these payments on to subcontractors in a timely manner.

Return of the subcontractor's retainage held by the prime contractor is required by the *Standard Specifications*. This is a race neutral effort intended to support and encourage all small businesses. Therefore, in accordance with the contract provisions, the prime contractor is required to release any and all retainage to the subcontractor within a designated time period after subcontract completion. The Project Engineer has no role in this process other than to respond to allegations of non-compliance with this contract requirement as with any other. We need to keep in mind that our contract is with the prime contractor and as a result, we are not a party to the prime contractor's subcontract documents. We should avoid becoming involved in prime's relationship with their subcontractors.

In the prime contractor's effort to determine completion of subcontract work, as required by the contract provisions, the Project Engineer may be asked to determine completion of a portion of the work. While we need to work with the Contractor to comply with the requirements of the specification, we should also take specific care to not issue partial punch lists or to place ourselves in a position of "accepting" portions of the work. In some cases we may provide the Contractor relief under certain conditions as described in Section 1-07.13 of the standard specifications, "Contractor's Responsibility for the Work."

1-2.7C EEO (State Funded Projects)

The Contractor is required to comply with the EEO requirements detailed in the *Standard Specifications* Section 1-07.11, Requirements for Nondiscrimination. In general, these requirements include having an EEO officer, developing, maintaining, making known, and utilizing an EEO program. The Project Engineer should be alert for and respond to any indications or accusations of discrimination and if substantiated, take appropriate actions. The Office of Equal Opportunity and your regional OEO staff are available for guidance and assistance in these types of situations.

1-2.7D EEO (Federally Assisted Projects)

The requirements for EEO and nondiscrimination for federally assisted contracts are similar to what's required for State funded projects. However, additional monitoring, reporting, and authority are mandated by Federal laws as noted in the Federal contract requirements known as the "FHWA 1273." The "FHWA 1273" is included in every Federally assisted contract. These requirements are reiterated in the *Standard Specifications* Section 1-07.11, Requirements for Nondiscrimination.

Reporting

- Federal-Aid Highway Construction Contractors Annual EEO Report, Form FHWA - PR1391 — This form is required for all Federally assisted projects provided the prime contract is equal to or greater than $10,000 and for every associated subcontract equal to or greater than $10,000. Each contract requires separate reports be filed for the prime contractor and each subcontractor (subject to the above noted criteria.) These forms are due by August 25th each year in which work was performed in the month of July.

  The payroll period to be reflected in the report is the last payroll period in July in which work was performed. A contractor who works on more than one Federally assisted contract in July is required to file a separate

report for each of those contracts. For multi year projects, a report is required to be submitted each year work was performed during the month of July throughout the duration of the contract. A responsible official of the company must sign the completed report.

Upon receipt, the Project Engineer will forward this annual report to the Region's EEO Officer by September 17th. The Region EEO staff at the direction of the OEO will compile and report the information noted on the forms. The figures reported must reflect the number of employees, not hours, in each category, with subtotals broken out for women and minorities and grand totals for the category. Tables A through E reflect both apprentices and on the job trainees that were also utilized within each trade. The form must also include the corresponding subtotals in each category, A through E, broken out by both women and ethnicity.

- Summary of Employment Data Report, Form FHWA - PR1392 — The WSDOT Office of Equal Opportunity (OEO) has developed a program for the reporting of WSDOT's EEO accomplishments. This program, Equal Employment Opportunity Contractor Compliance Program, requires WSDOT to submit a summary of employment data to FHWA for each Federal fiscal year. This Summary of Employment Data Report, PR1392, is prepared from forms PR-1391 (monthly report) that have been submitted to the Region by the Project Engineer's offices. This summary is prepared by the Region EEO lead or other Region designee for each Federally assisted project. This reporting also includes Local Agency projects administered through the Region's Highways and Local Programs offices. The completed PR-1392 summary reports, including all forms PR 1391, are then submitted by the Region EEO lead to the WSDOT Office of Equal Opportunity by September 24th each year.
- Monthly Employment Utilization Reports, WSDOT Form - 820-010 — This form is required for all federally assisted projects if the prime contract is equal to or greater than $10,000 and for every associated subcontract equal to or greater than $10,000. This report includes the total work hours for each employee classification as well as the total number of employees, broken out by ethnicity, in each trade, for each WSDOT project. Instructions for completing the form can be found on the back of the form itself. These monthly reports are to be maintained by the Contractor in the respective prime or subcontractor's records.

  Where the prime's contract is valued at $100,000 or more, the Contractor shall submit copies of the prime's completed WSDOT Form 820-010 to the Project Engineer. The prime contractor shall also collect and submit these forms monthly from every subcontractor who holds a subcontract with a value of $100,000 or more. These reports are to be submitted to the Project Engineer by the 5th of each month. The project office has a responsibility to make sure these forms are submitted in accordance with the contract requirements. Upon receipt, the Project Engineer will forward the report to the Region EEO staff. The region EEO staff, at the direction of the OEO, will compile, report, and take any action necessary with regard to the information provided by these forms. As a result it is not necessary that copies of these reports be maintained in the project files.

Records Retention and Reviews

The Contractor is required to maintain all project records, including the aforementioned EEO records, for three years following completion of the contract.

1-2.7E Minority and Women Owned Business Enterprise (MBE, WBE)

MBE, WBE is the designation for holding State certification as a minority or women owned business enterprise. The State Office of Minority and Women's Owned Business Enterprises (OMWBE) certifies businesses as either a minority owned business (MBE), a women owned business (WBE), or a combination of both (M/WBE). On projects funded in whole or in part with State funds, the contract provisions will include a MBE, WBE special provision. This provision may specify voluntary goals for the Contractor's utilization of M/WBE. The provision also includes suggested methods for encouraging M/WBE participation. As noted, these requirements are indeed voluntary and there are neither preferences for accomplishment nor sanctions for noncompliance.

MBE/WBE Reporting

- Annual Report of Amounts Paid MBE/WBE Participants (Form 421-023). In accordance with Section 1-08.1 of the *Standard Specifications*, an Annual Report of Amounts Paid MBE/WBE Participants (Form 421-023) is required from the prime Contractor for all projects funded entirely by State funds. When a project contains Federal assistance, the Federal quarterly reporting requirements for DBE utilization override the States requirements, eliminating the need for the State's annual report of amounts paid.

  This Annual Report of Amounts Paid MBE/WBE Participants report reflects the State fiscal year, July 1 through June 30, and is to be submitted to the Contracting agency by the 20th of July each year and/or upon physical completion of the contract. The dollar amounts shown in the report are those amounts paid to the MBE/WBE firms during the reporting period. The final report is to show only the dollar amounts paid since July 1st through the Physical Completion date. The Region is responsible for entering this data into CCIS. The completed form is maintained as a part of the project records and becomes a part of the temporary final records upon completion.

1-2.7F Disadvantaged Business Enterprise (DBE)

DBE is the designation for holding Federal certification as a Disadvantaged Business Enterprise. On Federally funded projects there will normally be a DBE requirement of some sort specified by the contract special provisions. This special provision will be one of two types:

1-2.7F(1) GSP Includes No Goal

When *No Goal* is specified, the contractor is encouraged to take actions that promote DBE participation. The goal is intended to draw the bidders attention to the opportunity to subcontract with DBE's. However, these requirements are indeed voluntary and there are neither preferences for accomplishment nor sanctions for non-compliance.

1-2.7F(2) GSP Includes Condition of Award (COA) Goal

When *a Condition of Award Goal* (COA) is specified, the Contractor is required to employ DBE participation to at least the extent identified in the contract special provisions.

- As a *Condition of Award*, the Contractor must commit to and follow through on; subcontracting at least the amount identified by the COA goal to certified DBE firms or make a good faith effort to do so.
- Measurement of attainment is not simply the payments made to the DBE. Attainment is measured in accordance with the provisions of the "DBE Participation" section of the contract special provisions.
- Changes to the amounts specified for COA must be made in accordance with the procedures outlined in this section.

1-2.7F(3) Additional Execution Documents

Successful bidders will be required to provide a "Bidders List" to the Department. This list is to include the names and addresses of every firm that submitted a bid or quotation to the Prime, whether or not that bid was used as part of the overall proposal. The Contractor is directed to send this list directly to the WSDOT Office of Equal Opportunity in Olympia and normally the Project Engineer will have no involvement.

1-2.7F(4) DBE Reporting

The contract special provisions require the Contractor to submit to the Project Engineer a "Quarterly Report of Amounts Credited as DBE Participation" for each quarter and upon completion of the project. Again, the measurement is not simply the payments made to the DBE, rather it is in accordance with the "DBE Participation" section of the contract special provisions.

1-2.7F(5) On Site Reviews

- **Contract Includes Condition of Award Goal** — On site reviews shall be conducted on contracts that include COA goals when the COA subcontractor starts work, during the peak period of the subcontractor's work, and whenever there is a change in the nature or methods of the work. On site reviews are also required when a COA subcontractor is replaced. The intent of the overall program and hence the review is to document that the DBE is indeed in control of the work and performing a *"Commercially Useful Function"* (CUF) as described by the specification. The on site review is a "snapshot in time" and should record personal observations, documentation reviews, and personnel interviews as applicable. A copy of the completed on site review form (272-051) should be forwarded to the WSDOT Office of Equal Opportunity. The Condition of Award letter requires that the identified DBE firms perform specific item(s) of work for the estimated dollar amounts included in the proposal. The letter also identifies whether a firm performs as a "subcontractor," "manufacturer," or "regular dealer." DBE compliance issues should be brought to the attention of the State Construction Office.
- **Contract Includes No Goal** —
  The state has an obligation to make sure the quarterly reports are reasonably accurate. Taking credit for DBE accomplishments in the reports requires that the DBE perform a commercially useful function. WSDOT has committed to FHWA to perform the necessary number of on site reviews such that the project engineer is comfortable that the quarterly reports are accurate. It is suggested that at least one on site review be performed on any DBE that performs a substantial amount of work. Reviews should also be performed when the situation warrants such as sharing of resources with the prime.

1-2.7F(6) Changes to the Condition of Award (COA)

The Contractor is required to utilize the COA subcontractors, manufacturers, etc., to perform the work as listed in the COA letter. Substitution of another DBE is allowed if:

- A COA DBE firm becomes decertified, or
- The contractor proposes a change to the contract that reduces DBE COA participation, or
- The prime contractor provides documentation that a DBE firm is unwilling or unable to perform the work.

Exceptions to the substitution requirement may be allowed under any of the following circumstances:

- WSDOT deletes the COA firm's intended work.
- The contractor can show substantial financial loss if a substitution is required.
- The work has progressed to the point where no other work remains to be subcontracted.
- The DBE subcontractor has taken the positive step of graduating from the DBE program.

1-2.7F(7) Substitution

Substitutions must meet the following requirements:

- The new firm must do an equal dollar value of work on the contract.
- The change order does not increase the dollar amount of the original goal.

1-2.7F(8) Condition of Award (COA) Change Orders

Changes to the contract COA amounts must be made through a change order. The amounts shown in the COA change order should be limited to the credit necessary to accomplish the original contract goal amount as follows:

- An explanation of why the change is necessary.
- Identification of both the deleted work and the added work.
- Revised subtotals for each affected DBE firm.
- Revised total attainment for DBE participation.
- Documentation of a good faith effort to substitute should go in the change order file, (if required, see 1 2.7F(6)).

The State Construction Office must execute any change orders that revise the COA commitment. When preparing the change order in CCIS pending CO's menu use option 3, "Condition of Award Items." Include the first three items listed above in the change order document. When submitting the change order to the Contractor for signature, the Project Engineer should also send copies to the affected DBE firms and should advise the Contractor that this has been done.

1-2.7G On-the-Job Training (OJT)

1-2.7G(1) On-the-Job Training Special Provisions — General

The requirements for training are made a part of the contract by the special provision, Special Training Provisions. The amount of training is set by the WSDOT Office of Equal Opportunity based on the opportunities presented by the work and the needs in the geographical area involved. The requirements for trainee, training plan approval, and trainee payment are all specified in the contract special provisions.

1-2.7G(2) OJT Required Reports

The contract provisions allow the Contractor to accomplish training as part of their work activities, or through the activities of their subcontractors or lower-tier subcontractors. However the prime contractor is designated as being solely responsible for the completion of the training requirements as they are outlined in the contract provisions.

- Form DOT 272-049 Training Program — A training program is to be completed by the Contractor. The program must be submitted to the Engineer for approval prior to commencing contract work. The Project Engineer's office may approve Bureau of Apprenticeship Training (BAT) or the State Apprentice Training Committee (SATC) programs provided they meet the requirements specified in the contract provisions. The Region may also approve a non-SATC or BAT program once concurrence has been received from the WSDOT Office of Equal Opportunity (OEO is required to obtain approval from FHWA before concurring.) Regardless, one copy of Region approved Training Programs should always be submitted to the WSDOT Office of Equal Opportunity.
- Form 272-050 Apprentice/Trainee Approval Request — Approval of an individual trainee cannot be authorized until an approved Training Program is filed with the Region. This form is to be submitted by the Contractor for each trainee to be trained on the project. When a BAT/SATC apprentice/trainee is first enrolled, a copy of the apprentice/trainee's certificate showing apprenticeship/training registration must accompany the Trainee Approval Request. Trainees are approved by the Project Engineer's office based on the criteria in the special provisions.
- Form DOT 272-060 Federal-aid Highway Construction Annual Training Report — This report is to be completed annually by the Project Engineer summarizing the training accomplished by the individual trainees during the reporting period beginning June 1 of the previous year and ending May 31 of the current year. This report is due at the Regional EEO Office by June 10th of each year.

1-2.7G(3) Payment for "Training"

At progress estimate cutoff time, the Contractor shall submit a certified invoice requesting payment for training. The invoice must provide the following information for each trainee:

- The related weekly payroll number
- Name of trainee
- Total hours trained under the program
- Previously paid hours under the contract
- Hours due for current estimate
- Dollar amount due for current updated estimate

Retroactive payment may be allowed provided:

- The Training Program is approved
- There are no outstanding issues or circumstances that would have prevented approval of the apprentice/trainee

Increases in training hours are allowable and may be approved on a case by case basis by the Project Engineer in consultation with the Regional EEO Officer.

1-2.8 Control of Work

1-2.8A Authority of the Project Engineer

The Project Engineer is given considerable authority to enforce the provisions of the contract under Section 1-05.1 of the *Standard Specifications*. This authority is tempered by WSDOT's policies and delegation of authority from the Engineer to the Project Engineer. Accordingly, considerable care and professional judgment must be exercised by the Project Engineer in order to avoid exceeding the authority as delegated and to avoid decisions or actions that may be contrary to WSDOT policy. Should there be any doubts as to the limits of authority, the Project Engineer should consult the Regional Construction Manager.

In many cases, the courts have held that where the Project Engineer has exceeded the authority provided in the plans and specifications or the authority delegated by the Engineer, the actions of the Project Engineer are binding upon WSDOT. Because of this, it is important that the Project Engineer make no instructions, verbally or by written memoranda, that are outside the scope of the plans, specifications, contract provisions, or the authority delegated by the Engineer.

In advance of or during the course of the project, in the interest of economy and efficiency, noncritical items of work may be identified for which the Project Engineer may choose to modify the normal inspection or testing procedures. In taking these actions, the Project Engineer is acting under the professional responsibility inherent in all actions as a representative of the Department and a Licensed Professional Engineer. Full accountability of such incidents is expected. The scope of such actions should not exceed $10,000 for a single bid item, nor exceed $25,000 for an entire project.

The nature of the work to be accepted in this manner will generally be limited to minor and isolated items. Acceptance would typically involve dimensional conformance to the plans and a visual determination that the materials are suitable, however, the Project Engineer may require some testing or other means to support a decision. In such action, the Project Engineer should be guided by the principle of achieving the intent of the contract, attaining reasonable expectations of service life proportional to cost, and protection of public safety. Typically, changes in acceptance procedures will only be made to work outside the vertical limits of the traveled way. Consideration should be given to the consequences of subsequent failure, ease of replacement, whether or not there is a high variability in the quality of similar work, or any other pertinent facts. Actions taken in accepting such materials should be identified in the project records with acknowledgment by signature of the Project Engineer. Materials accepted in accordance with this guidance should be identified in the Project Engineer's preparation of the Certification of Materials under Chapter 9-1.5 of this manual.

The use of this process is not intended to retroactively justify deficiencies discovered after the completion of work.

1-2.8B Contractor's Equipment, Personnel, and Operations

The Contractor is required to furnish adequate equipment for the intended use. The Contractor's equipment must also be maintained in good working condition. Prior to the start of work, the Project Engineer should ensure, by inspection, that the Contractor's plant, equipment, and tools comply with the specifications.

Whenever the specifications contain specific equipment requirements, the Project Engineer should verify that the equipment provided meets these specifications. This should be documented in project records such as the Inspector's Daily Report. The Contractor is required to furnish, upon request, any manuals, data, or specialized tools necessary to check the equipment.

It is most important that the operation of automatically controlled equipment be checked carefully and that the Contractor be advised immediately whenever the equipment is not performing properly.

The Contractor's supervisory personnel must be experienced, and able to properly execute the work at hand. If, in the Project Engineer's opinion, the Contractor's supervisory personnel are not fully competent, the Project Engineer should immediately notify the Regional Construction Manager of the facts in the matter, seeking assistance and advice.

It is expected that, consistent with WSDOT's policies and delegated authority, the Project Engineer will assist the Contractor in every way possible to accomplish the work under the contract. However, the Project Engineer must not undertake, in any way, to direct the method or manner of performing the work. Should the Contractor select a method of operation that results in substandard quality of work, non-specification results, a rate of progress insufficient to meet the contract schedule, or that otherwise violates the contract specifications or provisions, the Contractor should be ordered to discontinue that method or make changes in order to comply with the contract requirements. Where cooperation cannot be achieved, the Project Engineer should notify the Regional Construction Manager of the facts in the matter, seeking assistance and advice.

1-2.8C Defective or Unauthorized Materials or Work

Contract Final Acceptance for all work completed on a project is made solely by the Secretary of Transportation. However, the Secretary relies heavily on the actions and professional opinions of others, involved throughout the course of work, in determining acceptability. Because of this, it is expected that the Project Engineer, working with the assistance of the Regional Construction Manager, as well as making full use of the many resources available at both the Regional level and Headquarters, particularly the office of the State Construction Engineer, will ensure that sufficient inspection is conducted in order to determine that the work

performed or the materials utilized to construct the project comply with the requirements included in the contract plans and specifications. When inspections or tests are performed that indicate substandard work or materials, the Project Engineer should immediately notify the Contractor, rejecting the unsatisfactory work or material. When a review of the Contractor's work or materials used indicate questionable acceptability with regard to the specifications, the Contractor should be notified as quickly as possible so that changes in materials or work methods can be made in order to avoid materials or work being rejected.

1-2.8C(1) Defective Materials

The contract plans and specifications for construction of a project require that specific materials and/or work practices be utilized in completing the work. The Project Engineer may reject any materials not conforming to the requirements of the specifications. The rejected materials, whether in place or not, are to be immediately removed from the site of the work unless the following guidelines for acceptance of non-specification materials are followed:

Material Not In Place

1. Nonconforming aggregate materials that are within the defined tolerance limits noted in Chapter 9-5.6 of this manual may be accepted for use on the project in accordance with the guidance in Chapter 9-5.4(B).

2. There may be situations where WSDOT could obtain significant benefit from the use of nonconforming aggregate materials. This requires prior concurrence of the State Construction Engineer and a change order modifying the project specifications.

Except for 1 and 2 above, materials that are known in advance as failing to comply with the Specifications are not to be incorporated into the work.

Material In Place

1. Price adjustments have been developed and are referenced in the contract for acceptance of certain materials whose properties cannot be determined until they are in place. Items this policy applies to include: concrete compressive strength, Portland cement concrete pavement thickness, asphalt concrete gradation, oil content, density, and pavement smoothness.

2. Material incorporated into the work that is subsequently found to be in nonconformance with the specifications and for which price adjustments for acceptance are not included in the contract, must be reviewed to determine acceptability. The determination of acceptability should be made only when, in the Project Engineer's judgment, there is a possible service or benefit to be obtained from its use. If it is determined that no benefit or service is obtained from the material's use, the Project Engineer may direct that the material be immediately removed and replaced at no cost to WSDOT.

The Project Engineer may consult the State Materials Laboratory, the State Bridge and Structures Office, or other design organizations for assistance in determining the usefulness of the nonconforming material. If consulted, these offices will offer technical advice to the extent that information is available. It is not intended to enter into extensive research to assess material which could be removed and replaced under the contract terms.

If the material is to be accepted for continued use, a determination of possible reduced service and the resulting credit to be assessed by change order, should be completed by the Project Engineer. This determination must meet with the Region Construction Manager's approval for execution of the change order. In addition, prior review and concurrence must be obtained from the State Construction Engineer for the intended application of the material and the Materials Engineer for concurrence with issues of material performance. With this determination for acceptance of non-specification material, discussions should be initiated with the Contractor and a final change order completed.

If it is determined that the specification violation will not compromise the performance of the material and the nature of the violation is considered to be more of a technical infraction of the specification, the material may be accepted with a change order, possibly including a price reduction. If there is sufficient data and if the nature of the material makes analysis feasible, the State Materials Laboratory will determine a pay factor using QC/QA methods similar to those described in the Standard Specifications, Section 1 06.2(2). If QC/QA can not be applied, the Project Engineer may determine an adjustment subjectively, using whatever information is available. This assessment or price adjustment may vary from a portion of the material costs up to the total contract unit bid price for the bid item involved. If it is determined that the violation is serious enough that the material can not be accepted for use on the project, the Project Engineer may direct its complete removal and replacement at no cost to WSDOT.

All change orders for acceptance of nonconforming materials are Contractor proposed and WSDOT is under no obligation to accept or approve any of them.

1-2.8C(2) Defective or Unauthorized Work

The following types of activities will be considered unauthorized work and will be completed solely at the risk and expense of the Contractor:

- Work performed contrary to, or regardless of, the instructions of the Project Engineer.
- Work and materials that do not conform to the contract requirements.
- Work done beyond the lines and grades set by the plans or the Engineer.
- Any deviation made from the plans and specifications without written authority of the Project Engineer.

Until all issues of material acceptance and conformity to the contract plans and specifications can be resolved, unauthorized work will not be measured and paid for by WSDOT. The Project Engineer may direct that all unauthorized or defective work be immediately remedied, removed, replaced, or disposed of. In correcting unauthorized or defective work, the Contractor will be responsible to bear all costs in order to comply with the Engineer's order.

For additional guidance, see Section 1-05.7 of the *Standard Specifications*. If the Contractor fails or refuses to carry out the orders of the Engineer or to perform work in accordance with the contract requirements, the Project Engineer should immediately notify the Regional Construction Manager of the facts in the matter, seeking assistance and advice.

1-2.8C(3) Material Acceptance by Manufacturer's Certificate

All material is to be accepted for use on the project based on satisfactory test results that demonstrate compliance with the contract plans and specifications. All work demonstrating compliance is to be completed prior to the material's incorporation into the work. In many cases, this testing has already been completed in advance by the manufacturer. A Manufacturer's Certificate of Compliance is a means to utilize this work in lieu of job testing performed prior to each use of the product. While this provides for a timely use of the material upon arrival to the job site without having delay in waiting for the return of test results, it creates potential difficulties in obtaining and assessing the adequacy of a certificate.

Section 1-06.3 of the *Standard Specifications* describes the procedures for acceptance of materials based upon the Manufacturer's Certificate of Compliance. Division 9 of the *Standard Specifications* describes those materials that may be accepted on the basis of these certificates. Since a certificate is a substitute for prior testing, it is intended that all certificates be furnished to the Project Engineer prior to use or installation of the material.

However, there are some circumstances where the Contractor may request, in writing, the Project Engineer's approval to install materials prior to receipt and submittal of the required certificate. The Project Engineer's approval of this request must be conditioned upon withholding payment for the entire item of work until an acceptable Manufacturer's Certificate of Compliance is received. Examples of materials that *shall not* be approved by the Project Engineer for installation prior to the Contractor's submittal of an acceptable certificate are: materials encased in concrete (i.e., rebar, bridge drains, etc.); materials under succeeding items where the later work cannot be reasonably removed (i.e., culvert under a ramp to be opened to traffic); etc. The Project Engineer's approval or denial shall be in writing to the Contractor, stating the circumstances that determined the decision.

At the conclusion of the contract, there may still be some items that are lacking the required certificates. These items must be assessed as to their usefulness for the installation, prior to payment of the Final Estimate and subsequent Materials Certification of the contract. The review of these items may include:

- Comparison with the suitability of other shipments to the project or other current projects.
- If possible, sampling and testing of the items involved or residual material from the particular lot or shipment.
- Independent inspection on site of the completed installation.

If it is determined that the uncertified material is not usable or is inappropriate for the completed work that incorporates the material, the Contractor should be directed to immediately remove the material, replacing it with other certified materials. If the material is found to be usable and is not detrimental to the installation it was incorporated into, it may be left in place but with a reduction to no pay. The reduction in pay will be the entire cost of the work (i.e., unit contract price, portion of lump sum, etc.) rather than only the material cost. The Contractor should continue to have the option of removing and replacing the uncertified material in order to regain contract payment for the installation.

1-2.8D Contractor Submittals

Missing submittals is a principal source of delays in closing out the project and processing the final estimate. As the project proceeds toward completion, the Project Engineer and the Contractor should attempt to obtain all submittals as the need arises. These might include such things as materials certificates, certified payrolls, extension of time requests, or any other item or document that might delay processing the final estimate. Attention is needed to assure the receipt of these items from subcontractors as they complete their work.

1-2.8E Statement of Materials and Labor, Form FHWA-47

This report is required for all projects over $1,000,000 on the NHS, excluding Force Account, Beautification, and Railroad Protective Devices. When this report is required, it is to be prepared in accordance with the requirements and instructions contained on the form and in the "Required Contract Provisions Federal-aid Construction Contracts", Form 1273, the "pink" sheets that are included in every federal-aid project.

When this report is a requirement of the contract, the Project Engineer will obtain it from the Contractor, review the Contractor's work for completeness and reasonableness, complete Section A, and submit it directly to the Office of the FHWA, Attn: Construction Engineer, at MS: 0943. A copy of this report shall be submitted with the Final Estimate to the State Construction Office. If the Contractor's submittal is found to be incomplete or to contain obviously incorrect data, it shall be returned to the Contractor for correction.

It is mandatory that the materials be reported in the units shown, i.e., tonnes, meters, etc. Materials not listed on the report form need not be reported.

1-2.8F Contractor's Performance Reports

The procedures for completing and submitting the Prime Contractor Performance Report are included with the report, Form 421-010, and the Prime Contractors Performance Report Manual, M 41-40. The requirement for this report and other direction can also be found in WAC 468-16-150 and WAC 468-16-160.

Should the Contractor's typical performance on a contract become below standard, the Project Engineer should immediately notify the Regional Construction Manager of the facts in the matter, seeking assistance and advice.

1-3 Estimates and Records

1-3.1 Estimates

1-3.1A General

Payment for work performed by the Contractor and for materials on hand must be made in accordance with Section 1-09 of the *Standard Specifications*. To facilitate payments to the Contractor and ensure proper documentation, WSDOT utilizes an automated computer system to record project progress in terms of bid item quantity accomplishment. This is then used to pay the Contractor for actual work performed during each designated pay period or for materials on hand. The automated system that completes this task is called the Contract Administration and Payment System (CAPS). CAPS utilizes an electronic tie between each project office's computer system and the mainframe computer. This system provides access to a large volume of corporate data and facilitates the maintenance of this data by different groups in different locations. Some of these different activities include:

- Contract Initiation — A Headquarters action whereby new contracts are created and stored in a computer file. The information consists of the names of the Contractor and the Project Engineer, project descriptive data, accounting identifier numbers, preliminary estimate, proposal date, bid opening date, award date, execution date, accounting groups and distributions, and an electronic ledger.
- Project Ledger — An updating process by the Project Office which keeps track of work performed on the contract as it is completed.
- Estimate Payments — A Project Office action whereby progress estimates and Regional final estimates are processed directly from the Project Office. The Headquarters Final Estimate process activates the Region Final when all the required paperwork is in place. Supplemental final estimates are processed by Headquarters only. Complete instructions for use of the CAPS computer system are included in the manual titled *Contract Administration and Payment System* (M 13-01).

1-3.1B Progress Estimates

Progress estimates are normally processed on the 5th of the month for odd numbered contracts and on the 20th of the month for even numbered contracts. Where the Project Engineer deems it appropriate, estimates may also be run on other dates.

Estimates may also be run on other dates if the progress estimate or parts of the progress estimate were withheld to encourage compliance with some provision of the contract and the Contractor resolves the issue that caused the withholding. These estimates should be paid immediately upon resolution by the Contractor.

Within the CAPS system, the basis for making any estimate payment is information from the project ledger. Every entry in the ledger is marked by the computer as either paid, deferred, or eligible for payment. Before an estimate can be paid, a Ledger Pre-Estimate Report (RAKD300C-PE) must be produced. In constructing this report, the CAPS system gathers all the ledger entries that are identified as eligible for payment, prints them on the report summarized by item, and shows the total amount completed to date for that item but not yet paid for by progress estimate. The report also shows any deferred entries or exceptions if they exist and includes a signature block for the Project Engineer's approval.

If there are errors or omissions in this report, the ledger must be changed to reflect the correct data. After corrections are made, the Ledger Pre-Estimate Report must be run again in order to get the corrections into the report and made available for payment by progress estimate. Once the Ledger Pre-Estimate Report is correct, an actual estimate can be paid. The report containing the Project Engineer's signature should be retained in the project files.

The estimate process is then accomplished with a few key strokes in option 2, estimate payments, in the CAPS main menu. At this point, the CAPS system will automatically calculate mobilization, retainage, and the sales tax. The warrant will be produced, signed, and sent to the Contractor along with the Contract Estimate Payment Advice Report and two different sales tax summary reports. Copies of these reports will also be sent to the Project Office. When the Project Office receives their copy of the Contract Estimate Payment Advice Report, the total amount paid for contract items should be checked against the Pre-Estimate Report. This helps to verify that the amount paid was what the Project Engineer intended to pay. In addition, the ledger records that produced the estimate will now be marked by the CAPS system as being paid.

Up to the point of actually producing the warrant, the entire process for making a progress estimate payment is initiated and controlled by the Project Office.

Particular attention should be given to the comparison of the plan quantities and the estimate quantities for the various groups on the project as shown on the Ledger Pre-Estimate Report. Overpayments on intermediate progress estimates are sometimes difficult to resolve with the Contractor at the conclusion of the project.

New groups which do not change the termini of the original contract or changes in groups should be accomplished by memorandum from the Region to the State Accounting Services Office.

An additional estimate may be prepared if considerable work has been done between the date of the last progress estimate and the date of physical completion when the Engineer anticipates delays in preparing the final estimate. Should this circumstance occur, the additional estimate should show the work done to date no later than the day before the date of physical completion.

1-3.1B(1) Payment for Material on Hand

Payment for material on hand may only be considered for materials that will be incorporated into the permanent work. Payment amounts for material on hand must not exceed the bid item amount. In processing payment for materials on hand, the CAPS system utilizes the 900 series of item numbers for ledger entries. The requirements for payment of Materials on Hand are noted in Section 1-09.8 of the *Standard Specifications*. Payments can be made provided that the Contractor submits documentation of the amounts requested, that the materials are found to have met the requirements outlined in the plans and specifications, and the materials are delivered to or stockpiled near the project site or other storage sites that may be approved by the Project Engineer.

All materials, for which requests for payment are made, must be stored under the Contractor's control. The Contractor must agree that the material will not be diverted to other work. Materials should be segregated, bundled and tagged, or otherwise marked or identified for use on a specific contract or project. All materials paid for as Materials on Hand must be kept in a manner that is readily available for inspection and periodic identification by WSDOT.

Where the items are fabricated and stored in areas outside the Region, then the Region may make arrangements with other Regions or the State Materials Laboratory for inspection deemed necessary prior to paying for the items as Material on Hand.

Payments may also be made for materials stockpiled at a materials fabricator or for completed portions of fabricated items. The Project Engineer may establish the most expedient method of payment for fabricated materials on hand in accordance with the requirements of Section 1-09.8.

When materials, for which on Hand payments have been made, are incorporated into the work, the MOH payments must be deducted. It is the responsibility of the Project Engineer to devise procedures that assure this is done correctly.

When contracts are estimated to cost more than $2 million and require more than 120 working days to complete, a General Special Provision (GSP) will be included in the contract provisions, providing a different procedure for handling payments and deductions for Material on Hand. When this GSP is included in the contract provisions, the following procedure is used to determine how much of the MOH payment should be deducted from an estimate:

- Each month, no later than the estimate due date, the Contractor will submit a letter to the Project Engineer that clearly states:
  - The amount originally paid on the invoice (or other record of production cost) for the items or Material on Hand,
  - The dollar amount of the previously paid Materials on Hand incorporated into each of the various work items for the month, and
  - The amount that should continue to be retained in material on hand items.

  If work is performed on the items and the Contractor does not submit a letter, all of the previous material on hand payment may be deducted on the next available progress estimate.

1-3.1B(2) Payment for Falsework

On those projects which include a lump sum item for bridge superstructure, payment may be made on request by the Contractor for falsework as a prorated percentage of the lump sum item as the work is accomplished. The Project Engineer may require the Contractor to furnish a breakdown of the costs to substantiate falsework costs. For any given payment request, the Contractor may be required to furnish invoices for materials used and substantiation for equipment and labor costs.

1-3.1B(3) Payment for Shoring or Extra Excavation

When Shoring or Extra Excavation Class A is included as a bid item, payment must be made as the work under the bid item is accomplished, the same as for any other lump sum bid item. When Shoring or Extra Excavation Class B is included as a bid item, measurement and payment shall be made in accordance with Sections 2-09.4 and 2-09.5 of the *Standard Specifications*. RCW 39.04 provides that the costs of trenchsafety systems shall not be considered as incidental to any other contract item, and any attempt to include the trench safety systems as an incidental cost is prohibited. Accordingly, when no bid item is provided for either Shoring or Extra Excavation Class A or Shoring or Extra Excavation Class B and the Engineer deems that work to be necessary, payment will be made in accordance with Section 1-04.4 of the *Standard Specifications*.

1-3.1B(4) Payment for Surplus Processed Material

When excess aggregate is produced by the Contractor from a WSDOT furnished source, the Contractor will be reimbursed actual production costs if the excess materials meet the requirements of Section 1-09.10 of the *Standard Specifications*. If more than one type of aggregate is involved, the provisions of Section 1-09.10 apply to each type.

If WSDOT has a need for the excess aggregate for either maintenance or future construction contracts, the material may be purchased into the appropriate inventory account. The Project Engineer should contact Region Maintenance and Accounting for guidance. If aggregates are to be disposed of as surplus, the Project Engineer should contact the State Administrative Services Office, Purchasing and Inventory Section, for additional assistance.

1-3.1B(5) Liquidated Damages

Liquidated Damages and Direct Engineering, or other related charges, are to be addressed as described in the contract specifications, Section 1-08.9 of the *Standard Specifications,* and Chapter 1-2.5G of this manual. Direct Engineering charges are a form of Liquidated Damages and must be listed on the monthly progress estimates on the line for Liquidated Damages. Traffic related damages as described in Chapter 1-2.5G(2) of this manual are to be listed under Miscellaneous Deductions. The Project Engineer must evaluate potential Liquidated Damages that have accrued as a result of the expiration of contract time before the damages are withheld from moneys due the Contractor. The work and circumstances that have occurred over the course of the project should be reviewed to determine if there is potential entitlement for granting additional contract time. Liquidated Damages that have accrued should be adjusted for this evaluation. Liquidated Damages deemed chargeable should then be withheld from moneys due the Contractor each monthly progress estimate as Liquidated Damages accrue. While the Project Engineer takes the action to withhold damages as the work progresses, only the State Construction Office may actually assess those damages.

1-3.1B(6) Credits

Dollar amounts may be deducted as a "Below The Line Miscellaneous Deduction" from progress or final estimates when WSDOT is due a credit from the Contractor. Routine credits from the Contractor to WSDOT include, but are not limited to, the following items:

- Engineering labor costs when due to Contractor error or negligence, additional engineering time is required to correct a problem. This includes the costs of any necessary replacement of stakes and marks which are carelessly or willfully destroyed or damaged by the Contractor's operation.
- Lost and/or damaged construction signs furnished to the Contractor by WSDOT. The Contractor should be given the opportunity to return the signs or replace them in kind prior to making the deductions.
- Assessment to WSDOT from a third party that is the result of the Contractor's operations causing damage to a third party, for example, damage to a city fire plug. Actual costs will be deducted from the estimate.
- Other work by WSDOT forces or WSDOT materials when the Contractor cannot or will not repair damages that are the responsibility of the Contractor under the contract.
- Liquidated damages not associated with contract time, i.e., ramp closures, lane closures (see Chapter 1-2.5G).
- As provided for in the specifications, specific costs or credits owed WSDOT for unsuccessful contractor challenged samples and testing.

The authority to withhold and assess routine "Below The Line Miscellaneous Deduction" on progress and final estimates has been delegated to the Regional Construction Manager, and may be further subdelegated to the Project Engineer. The Project Engineer must give written documentation to the Contractor describing the deduction and provide sufficient notice of the impending assessment.

Credit items which are specifically provided for by the *Standard Specifications* or contract provisions, such as non-specification density, non-specification materials, etc. may be taken through the contract items established for those purposes. A change order is required for credit items which are not specifically provided for by the contract provisions.

Occasionally a Contractor will send a check directly to a Project Office for payment of money due WSDOT. (The Project Office should not request payment.) Whenever a Project Office or WSDOT employee receives a check or cash directly from a Contractor, it is very important that the guidance found in Directive 13-80, Control of Cash Receipts, be followed.

1-3.1B(7) Railroad Flagging

All dollar amounts actually incurred by the Railroad Company for railroad flagging, under the terms of the typical railroad agreement, will be paid by WSDOT. The Contractor will incur no costs for railroad flagging unless the flagging is for the Contractor's benefit and convenience. In this case, the Project Engineer will deduct this cost on monthly progress estimates as a below the line item in the Contract Administration and Payment System.

1-3.1B(8) Payment for Third Party Damages

Section 1-2.4I of this manual details when WSDOT assumes responsibility and pays for third party damages. The *Risk Management Manual*, M 72 01, provides detailed guidance on procedures, including lines of communication. Payment should be made under the item "Reimbursement for Third Party Damages". This item is only intended to be used for costs that are the responsibility of the contracting agency. If this item was not included in the contract, it may be added by change order using a separate group for each Control Section in which an incident occurs. On some items such as "Repair Impact Attenuator" there has been a conscious decision by the contracting agency during design to assume a risk which is otherwise the contractor's. It would not be appropriate to assume this risk for other items of work by adding a similar pay item through a change order.

The next step is for the Project Engineer to determine if an incident warrants an attempt to recover costs based on cost effectiveness. If so, a memo is necessary to provide notice and information to the risk management office. Basically,

they need the information necessary to investigate the incident, find the responsible party, determine the amount of the damages and obtain reimbursement for the State. The risk management office needs the following information:

- Contract Number, Project Description
- Names of Witnesses
- Documentation Related to the Damage
  - Change Order Number
  - Field Notes
  - Police Reports
  - Work Order Coding
- Summary of Repair Costs

1-3.1B(9) Withholding of Payments

Withholding payments for work the Contractor has performed and completed in accordance with the contract should not be done casually. There must be clear contract language supporting the action. The authority to withhold progress payments is subdelegated to the Regions. Further delegation to the Project Engineers is at the discretion of each Region.

There are very few occasions when it would be appropriate to withhold the total amount of a payment for completed work. If a minor amount of cleanup remains, if a portion of the associated paperwork has not been submitted, or if minor corrective measures are needed, then the correct action is to pay for the work and defer an amount commensurate with the needed remaining effort.

The concept of "allowing the Contractor to proceed at his own risk" and then withholding payment is not often supported by the contract. There is a contractual obligation to finish the work correctly, there would certainly be a "moral obligation" on the part of the Contractor to live up to the bargain, but there is no contract language that allows such an action. Specific exceptions to this rule are listed below.

Once a decision to withhold any part of the monthly payment has been reached, then it is imperative that the Contractor receive fair notice of this action. The method of this notice can be negotiated with the Contractor and could be a listing at the time of estimate cutoff, a copy of the pre-estimate report or other mechanism. Once notice has been provided, then it is also necessary to allow a reasonable time for corrections to be made.

No Payment for the Work

Standard Specification 1-06.3, "Manufacturer's Certificate of Compliance" is unique in that this is a situation, specified as part of the contract, where the contractor may request permission to assume the risk for no certificate and end up never being paid for the related work.

Progress Payment Deferral

In the following situations the contract specifies that the contracting agency has the authority to defer the entire progress payment:

- The contracting agency may not make any payments for work performed by a Prime/Subcontractor until the contractor performing the work has submitted a Statement of Intent to Pay Prevailing Wages approved by Labor and Industries (RCW 39.12.040)
- The contractor fails to submit a progress schedule that meets the requirements of the contract (*Standard Specification* 1-08.3)
- Failure to submit the "*required reports"* by their due dates (*Standard Specification* 1-07.11(10)B)

Wage Administration in General

The administration of wages and payment for the work are separate issues. Holding a force account payment for certified payrolls is not appropriate. Withholding payments on the contract is suggested as a method to achieve compliance under the *Standard Specifications* pertaining to wages (1-07.9(1)). This remedy should not be used without approval of the Headquarters Construction Office. Routine enforcement of wage requirements should be done on their own merits utilizing the sanctions specified as follows:

State Wage Administration

Labor and Industries is the enforcement agency for state prevailing wage administration. The State (WSDOT) is protected under the contract from wage claims by reserving 5 percent of the moneys earned as retained percentage. This 5 percent is made available for unpaid or underpaid wages liens among other claims. Contract payments should not be deferred due to a contractor's failure to pay the State minimum prevailing wage.

Federal Wage Administration

FHWA 1273 specifies that the State Highway Administration (SHA) is in the enforcement role for federal prevailing wage administration. Under Section IV "*Payment of Predetermined Minimum Wage*" subsection 6., "*Withholding,*" the State Highway Administration (contracting agency) is authorized to withhold an amount deemed necessary to make up any shortfalls in meeting Davis Bacon prevailing wage requirements. It goes on to authorize the deferral of all payments, under certain conditions, until such violations have ceased. This is only for federal wage requirements and the amount "deemed necessary" must be based on the amount of the underpayment.

Application of the *Standard Specifications*

Under 1-05.1 Authority of the Engineer reads in part as follows: "If the Contractor fails to respond promptly to the requirements of the contract or orders from the Engineer:…. 2. The Contracting Agency will not be obligated to pay the Contractor, and …….."

Under Section 1-09.9 Payments reads in part as follows: "Failure to perform any of the obligations under the contract by the Contractor may be decreed by the Contracting Agency to be adequate reason for withholding any payments until compliance is achieved".

Sounds good and we can do so, but withholding of payments owed the contractor must not be done on an arbitrary basis. Other than the previously noted exceptions, money is normally withheld because work/work methods are not in accordance with contract specifications. Also, the amount withheld must have a logical basis. We can not penalize the contractor by withholding more than the out of compliance work is worth.

Withholding payments should not be used routinely asa tool for forcing compliance on general contract administration requirements. The State is protected against nonperformance by requiring a performance bond. In the event that lack of contract compliance puts the State at substantial risk monetarily or safety wise, it may be appropriate to inform the contractor of the compliance problem and suspend work under *Standard Specification* 1-05.1 "*Authority of the Engineer*" until corrections are made.

When withholding money, remember that delaying the contractor's cash flow may damage the contractor's ability to perform work. Before doing so, the State should be able to demonstrate:

- specifically what was not in accordance with the contract and where the requirement is specified in the documents
- that the amount withheld is commensurate with the amount of the unauthorized, uncompleted or defective work
- that the contractor was notified in a timely manner (within 8 days per prompt pay laws) and given a chance to make corrections
- that the State has worked with the contractor to mitigate corrections to non-specification work in order to minimize the cost

The State is required to pay the contractor in a prompt manner within 10 days of the cutoff for a monthly pay estimate for all work performed in accordance with the contract during that period.

Regions are not authorized to withhold amounts that are greater than the estimated cost of the missing or incorrect portion of the work. Any such excess withholding must be approved by the Headquarters Construction Office.

1-3.1C Final Estimates — Regions

The final estimate for a project is processed in the same manner as a routine monthly progress estimate. The *Work Done To Date* entry on a final estimate is the physical completion date. When the Region final estimate is completed and is run in CAPS at the Region, it will not generate a warrant for the Contractor. Instead, the Region final estimate will produce several reports: a final Comparison of Quantities; the Contract Estimate Payment Advice; the Contract Estimate Payment Total; and the Sales Tax Summary.

These reports should be carefully checked to verify the accuracy of items, quantities posted, and the costs that have accumulated through various progress estimates during the life of the contract. Where necessary, corrections can be made to the ledger and the Region final estimate rerun as many times as it takes to make it correct before proceeding with the final estimate process.

If the final estimate shows an overpayment has been made to the Contractor, the estimate should still be processed in the same manner as a normal final estimate. If this occurs, the Contract Estimate Payment Totals report will show a minus amount due the Contractor. When the State Accounting Services Office receives the accepted final estimate package, that office will request any reimbursement due from the Contractor. The Project Engineer should not request reimbursement from the Contractor.

Once the Project Engineer has validated the final estimate amounts, a copy of the Comparison of Quantities Report, the Contract Estimate Payment Advice Report, and the Contract Estimate Payment Totals Report should be forwarded to the Contractor along with the Final Contract Voucher Certification. The Project Engineer might remind the Contractor that the person signing the Final Contact Voucher Certification must be authorized to do so. Authorized signatures are submitted by the contractor at the beginning of each contract.

Once the project has been physically completed, the final estimate package described above should be submitted to the Contractor for signature as soon as is reasonably possible. The final estimate package and request for the Contractor's signature should be transmitted to the Contractor formally. The effort to prepare the final estimate package will vary in nature and magnitude, depending on the project. In some cases, this work will conflict with field work on other projects. It is expected that final estimate preparation will be scheduled and accomplished during the six month period after physical completion.

Once the signatures and all necessary documents have been obtained, the final estimate package should be assembled by the Region and submitted to the State Construction Office. If any needed recommendations for assessment of liquidated damages associated with contract time have not already been submitted, this submittal should include them. The State Construction Office must resolve all issues of liquidated damages before the final estimate can be accepted and submitted to the State Accounting Services Office.

1-3.1D Final Estimates — Headquarters

The final estimate package submitted to the State Construction Office consists of the following:

- Project Status Report — The Project Status Report should address contract time and recommendations for liquidated damages related to contract time, amount of railroad flagging used if any, Miscellaneous Deductions identified, etc. In addition, the report should indicate whether or not all Affidavits of Wages Paid have been received for the Contractor, and all subcontractors, agents or lower-tier subcontractors.
- Final Contract Voucher Certification — Form 134-146, original only.
- If an assessment of liquidated damages has been made previously, include a copy of the letter from the State Construction Engineer to the Contractor assessing these.
- If an assessment of miscellaneous damages or liquidated damages resulting from causes other than time, include copies of letters from the Region to the Contractor for assessment of these.
- Contract Estimate Payment Totals — RAKC300F-EA.
- Copy of Form FHWA 47 (NHS Federal-Aid projects over $1 Million).

The final estimate package is reviewed by the State Construction Office and submitted to the State Construction Engineer for acceptance of the contract. The date on which the State Construction Engineer signs the Final Contract Voucher Certification becomes the final acceptance date for the contract itself. The final estimate package is then submitted to the State Accounting Services Office.

1-3.1D(1) Final Estimate Claim Reservations

Should the Contractor indicate a claim reservation on the Final Contract Voucher Certification, it must be accompanied by all of the requirements of Section 1-09.11(2) of the *Standard Specifications* (provided these have not been met in a previous claim submittal). The Project Engineer must assure that the requirements have been met prior to submitting the final estimate package to the State Construction Office. If the claim package is incomplete, return the voucher to the Contractor with notice of the missing parts.

1-3.1D(2) Unilateral Acceptance of Final Estimates

The Project Engineer cannot establish a completion date for the contract if the Contractor is unwilling or unable to submit one or more of the required documents noted in Section 1-08.5 of *Standard Specifications*. However, the Region can request that the State Construction Engineer accept the contract by signing the Final Contract Voucher Certification (FCVC) in spite of the missing documents.

If the Contractor has not signed the FCVC, the Region can request that the State Construction Engineer accept the contract without the Contractor's signature. The Region is responsible for notifying the Contractor before such a request is made. The State Construction Office will generate the certified letter notice mentioned in the *Standard Specifications*, Section 1-09.9. The date of the State Construction Engineer's signature of the FCVC becomes both the acceptance date and the completion date of the contract, both established unilaterally.

1-3.1E Supplemental Final Estimates

A Supplemental Final Estimate is a payment adjustment made to a contract after the Final Estimate has been processed and the project has been Accepted by the State Construction Engineer. A Supplemental Final Estimate may be necessary to correct an inadvertent over/under payment or where a claim settlement may require additional payment be made to the Contractor. In order to complete a Supplemental Final Estimate, the Project Engineer should complete and assemble the following items, routing them through the Region to the State Construction Office for review and further processing:

1. Assemble the backup information supporting the necessity and substantiating the cost of the changes to be made.

2. Complete any corrections or additional postings necessary in CAPS, including any postings to change order items added to CAPS for the settlement of a claim. (Please note, where additional CAPS postings are necessary after the Physical Completion date has been established, the *"Work Done To"* date in CAPS must be entered as the Physical Completion date or prior.)

3. Complete a Pre-Estimate report including the Project Engineer's signature recommending payment.

4. Complete a supplemental Final Contract Voucher Certification form reflecting the changes made and showing the new total *"Final Amount"*.

While postings and corrections to CAPS may continue, once the Completion date has been established for a contract, CAPS will no longer allow the Project Engineer or the Region to process further payments to the Contractor. As a result, payment of the Supplemental Final Estimate will need to be completed for the Project Engineer by the State Accounting Services Office.

After review, the Pre-Estimate report will be signed by the State Construction Engineer authorizing payment to proceed. Once the supplemental payment is completed, the signed and executed Pre-Estimate report will be returned to the Project Engineer where it can be maintained as a part of the project payment files and made a part of the Region Temporary Final Records.

While a new Final Contract Voucher Certification is completed as a part of the Supplemental Final Estimate, the Acceptance date will remain the same as established by the State Construction Engineer's signature on the original Final Contract Voucher Certification.

1-3.1F Retained Percentage

Retained percentage withholding is based upon RCW 60.28, which provides that:

- A sum not to exceed 5 percent of the money earned by the Contractor on estimates be retained by the Contracting Agency.
- The Contractor may submit a bond for all or any portion of the amount of funds retained by WSDOT.

  When a contract is awarded, the State Accounting Services Office or the Region Plans Office sends a package of contract documents to the Contractor.

  This package of contract documents also includes the necessary instructions for the Contractor to make application for a bond to replace all or any portion of the retainage. The bond form will be processed by the State Accounting Services Office without involvement from Project Engineer's Office.

  The Contractor, at any time during the life of the contract, may make a request to the Project Engineer for the release of all or any portion of the amount of funds retained. This request does not need consent of surety since the retainage bond form, for this purpose, requires their consent. The Region must forward this request by transmittal letter to the State Accounting Services Office. The Accounting Office will furnish the appropriate bond form to the Contractor for execution. The Contractor may return the executed bond form directly to the Accounting Office for final approval and signature by WSDOT.
- For projects that include landscaping, the Contractor may request that, 30 days after physical completion of all contract work other than landscaping work, WSDOT release and pay in full the amount of funds retained during the life of the contract for all work except landscaping.

  In order to initiate this release of funds, Form 421-009 should be completed by the Contractor and submitted to the Project Engineer. In signing the request, the Project Engineer will confirm that all work, except landscaping work, is in fact physically completed. For any landscaping work that may have been completed, the Project Engineer will designate the amount of landscaping moneys, if any, that have been earned to date by the contractor. In the space designated for remarks the Project Engineer will identify the landscaping or plant establishment work that remains to be completed and its approximate value. Except for landscaping work, the Project Engineer will determine if all Statements of Intent and Affidavit of Wages Paid have been received for the work that has been physically completed. WSDOT will continue to withhold a 5 percent retainage of any moneys earned for landscaping work that may have been completed to date and will continue to retain 5 percent of the moneys that are to be earned for landscaping that is yet to be completed. A bond is not required.

  The completed request along with the Project Engineer's cover memo confirming receipt of Statement of Intent and Affidavit of Wages Paid for the Contractor, subcontractor, and any lower-tier subcontractors who were involved in the completed work, is then forwarded to the State Construction Office for approval. Once approved, the Construction office will submit the request to the State Accounting Services Office for further processing. If no claims against the retainage for unpaid axes, labor, or materials have been received within the designated 60 day period, the Accounting Office will release the designated retainage to the Contractor.

1-3.2 Final Records for Projects Constructed by Contract

The Project Engineer is responsible for preparing all necessary records in order to document the work performed on the contract. Detailed instructions on the records required and methods of preparing them are covered in Chapter 10 of this manual.

1-3.3 Disputes and Claims

1-3.3A Claims By the Contractor

1-3.3A(1) Disagreement, Dispute, Protest

During the course of a contract, differences of opinion may arise over decisions and plan interpretations that benefit one party at the expense of the other. It is the policy of WSDOT to pursue resolution of these differences at the earliest possible time and to fully recognize all of the contractual rights of the Contractor during the resolution process.

Disagreements, disputes and protests are the responsibility of the Project Engineer until a formal claim is filed in accordance with Section 1-09.11(2). The Project Engineer may employ a variety of techniques and procedures to pursue resolution of these issues. With the high potential for cost impact, it is strongly recommended that all disagreements be identified and tracked.

When a protest occurs during a contract, the Contractor shall pursue resolution through the Project Engineer as outlined in Section 1-04.5 of the *Standard Specifications*. The Specification contains specific requirements which, if not followed, may result in a waiver of the Contractor's claim. The Project Engineer should monitor whether the Contractor is meeting these requirements. If all of the requirements have been met, the Project Engineer shall evaluate the merits of the protest and take whatever appropriate action is needed to resolve the issue. If it appears that the Contractor has failed to meet any of the requirements set forth in 1-04.5, the Project Engineer should advise the State Construction Office and request guidance. Pending such guidance, the Project Engineer may continue to discuss the protest with the Contractor with the qualification that no final evaluation of the protest will be made until permission is received from the State Construction Office.

1-3.3A(2) Claims

If the Contractor has pursued and exhausted all the means provided in Section 1-04.5 to resolve a dispute, the Contractor may file a formal claim. A formal claim, filed in accordance with Section 1-09.11(2), is a much more structured device and demands a high level of conformance with the contract requirements. The objective is to utilize the rights that WSDOT has under the contract to identify the issues, obtain a sufficient level of information from the Contractor and limit the discussion to a defined subject matter. To accomplish this, and to maintain the Department's rights in a situation that may lead to court action and expensive lawsuits, the Project Engineer must insist on rigid conformance with the requirements of the provision. In fact, the first evaluation must not be of the claim's merit, but rather of the claim's structure and content. If the package fails the specification requirements in any way, it should be returned to the Contractor immediately with a written explanation. Conversely, if the package meets the contract requirements, then the Project Engineer must comply with the demands for WSDOT actions that are included in the same specification.

The existence of a formal claim does not diminish the responsibility of the Project Engineer to pursue resolution. The only difference is that Headquarters final approval of a proposed settlement is required. The change order settling a formal claim must include waiver language similar to the following:

> "The Contractor, (company name), by the signing of this change order agrees and certifies that:
>
> Upon payment of this change order in the amount of $_____, any and all claims set forth in the letter(s) to the Department of Transportation, dated _____ and signed by _____ of (company name) in the approximate amount of $_____, have been satisfied in full and the State of Washington is released and discharged from any such claims or extra compensation".

If the settlement is intended to close out all dispute discussions for the contract, use language similar to:

> "The Contractor, (company name), by the signing of this change order agrees and certifies that:
>
> Upon payment of this change order in the amount of $_____, any and all claims in any manner arising out of, or pertaining to, Contract No. _____, (including but not limited to those certain claims set forth in the letter(s) to the Department of
>
> Transportation, dated _____and signed by _____ of (company name) in the approximate amount of $_____, have been satisfied in full and the State of Washington is released and discharged from any such claims or extra compensation in any manner arising out of Contract No. _____ ".

1-3.3A(3) Legal Filing

Once the Contractor has submitted a formal claim in acceptable form and the State has either denied the claim or failed to respond in the time allowed, the Contractor is free to seek judicial action by filing a lawsuit or, in some cases, demanding binding arbitration. Note that the Contractor must fully comply with the provisions of Section 1-09.11 before it can seek judicial relief. Once any legal action has been started, the Project Engineer may only continue with settlement efforts if the Attorney General's office has given specific permission to do so. Such permission may be sought through the State Construction Office. Settlements of claims which have resulted in a judicial filing need review and approval by the Attorney General's office and different waiver language similar to the following:

> "The Contractor, (company name), by the signing of this change order agrees and certifies that:
>
> Upon payment of this change order in the amount of $_____, any and all claims in any manner arising out of, or pertaining to, Contract No. _____, (including but not limited to those certain claims set forth in the complaint filed under Thurston County Cause No._____ (Contractor's name) vs. State of Washington), have been satisfied in full and the State of Washington is released and discharged from any such claims or extra compensation in any manner arising out of Contract No. _____ ".

1-3.3A(4) Final Contract Voucher Certification

In some cases, of course, the Contractor will not have been so cooperative as to participate in resolution efforts. After a protest has been disallowed, there may have been no formal claim filed and the Project Engineer really doesn't know if there is a continuing problem. The way to resolve this after the project is physically complete is to assemble the final estimate and send it to the Contractor with a Final Contract Voucher Certification (FCVC). The FCVC is the Contractor's last chance to formally file a claim. If there is no exception above the Contractor's signature on the FCVC, there is no claim. The contract will be over as soon as the State Construction Engineer accepts it. If the Contractor does not return the FCVC in a reasonable time, WSDOT may unilaterally set the completion date and process the final estimate without the Contractor's signature. Proposals to unilaterally accept a contract should be discussed with Region managers before any action is initiated.

1-3.3B Claims Against the Contractor — Damage

The Department has a claims office, now known as the Washington State Department of Transportation Risk Management Office (RMO). All receptionist job descriptions, all Region operations manuals, and all telephone training is set up to refer citizens with damage claims related to construction to the RMO and to provide the toll free number (1-800-737-0615). The RMO will react to the call, issuing claims forms, contacting the contractor, and following up on the actions taken.

The Project Engineer's role is to appropriately advise the RMO, if needed. There may be confusion about which contract is involved. Field office knowledge about the incident and the surrounding circumstances may be solicited. The contractor's insurance and the insurance provided by the Contractor for the State may be involved and information about the policy will, most likely, be requested.

If, in spite of the Department process, the claimant contacts the field office directly, the Project Engineer should refer the claimant to the State Risk Management Office (1-800-737-0615).

1-3.3C Claims Against the Contractor — Money

Claims received by the Region for money owed by the Contractor should be referred to the Contractor. A claimant should be advised of the legal right to file a lien against the retained percentage for claims involving labor, equipment, or materials used on the project and be referred to the State Accounting Services Office for obtaining the necessary lien forms.

1-3.3D Claims Against Officials and Employees

The statutes provide that claims may be filed against the State of Washington, State officers and employees, for damages resulting from their conduct and prescribes the manner in which the action must be taken. Whenever this occurs, the state will furnish the legal defense and pay any judgments if the act which caused the alleged damage was within the scope of the person's duties, was in good faith, and without negligence.

1-3.4 Stewardship

"Stewardship" is a term used in the context of Federal funding. In this context, it means "caretaker duties". Most of the processes included in this manual are, in one way or another, related to the duties of stewardship. In the simplest terms, being a steward of federal construction funds is the sum total of all the activities that WSDOT performs in construction administration. The fundamental responsibility is "I must see that the taxpayers get what they paid for". Along with the assignments of stewardship duties goes the responsibility to review and report a summary of the duties that are being or were carried out on the specific project.

Through agreement with FHWA, the responsibility to review and report on federal-aid projects has been assigned as follows:

- FHWA will be responsible for initial, intermediate, and final inspections on new construction and reconstruction projects on the Interstate.
- The State Construction Office will be responsible for interim and final inspections for all other projects with a contract amount over $3.5 million.
- Regions will be responsible for interim and final inspections on all projects with a contract amount less than $3.5 million.

Project inspections are intended to review monitoring and oversight activities of federal-aid projects and to assure FHWA that WSDOT is complying with the contract requirements, established WSDOT procedures, and federal-aid regulations. Final inspections will be performed on all federal-aid projects anytime after 90 percent completion, but no later than 30 days after the Physical Completion date. The scope of inspections is dependent on the size and type of the project. All change orders must be reviewed for compliance with established procedure, delegation of signature authority and federal-aid eligibility, and a statement confirming eligibility must be shown on the inspection report. Other subject areas, at the discretion of the reviewer, might include materials quality, inspection controls, traffic control, training, unusual features, schedule and time status, claims and disputes, etc.

Final Acceptance Reports must be completed on all interstate projects. These reports will be completed by FHWA for new construction and reconstruction projects and by the State Construction Office for all other interstate projects, including those jobs where the Region has performed the inspections. The acceptance report summarizes the findings of inspection reports and adds information regarding materials documentation and materials participation decisions, final costs and the outcome of any actions since the time of the final inspection report.

1-4 Utility and Railroad Relocation

1-4.1 Work Performed Under Utility Agreements

Utility agreement work associated with a contract exists in two categories. The first is work done for a utility by WSDOT that is included in the contract and performed by the WSDOT contractor. The second is work done, either by the utility or the utility's contractor, that is associated with and done near the WSDOT project.

If the utility work is included in the contract, the plans will show the work and will include pay items exactly as if the work was part of the transportation improvement. The responsibility of the Project Engineer is to treat this work the same way that "normal" work is handled. There will be a necessity for communication with the utility itself, inviting comments and joint reviews and inspection of the work. In many cases, the utility will provide materials or equipment to be incorporated into the work. The utility will also provide certification that provided material meets the requirements of the contract. If problems arise and changes are considered, there are additional paperwork demands. The Project Engineer should consult with the Utility and the Region Utility Engineer.

If the work is associated with the project, or if unrelated work is being done nearby, and the utility or its contractor is performing the work, the Project Engineer should treat the neighboring work in the same manner that adjacent WSDOT work would be treated. (See *Standard Specifications*, Section 1-05.14 and Section 1-2.2H of this manual.)

1-4.2 Work Performed Under Railroad Agreements

Railroad work associated with a contract exists in three categories. The first is work done for a railroad by WSDOT that is included in the contract and performed by the WSDOT contractor. The second is work done, either by the railroad or the railroad's contractor, that is associated with and done near the WSDOT project. The third category is railroad protective services. Protective services, such as flagging, are typically provided by the railroad.

If the railroad work is included in the contract, the plans will show the work and will include pay items exactly as if the work was part of the transportation improvement. The responsibility of the Project Engineer is to treat this work the same way that "normal" work is handled. There will be a necessity for communication with the railroad itself, inviting comments and joint reviews and inspection of the work. In many cases, the railroad will provide materials or equipment to be incorporated into the work. The railroad will also provide certification that provided material meets the requirements of the contract. If problems arise and changes are considered, there are additional paperwork demands. The Project Engineer should consult with the Railroad Company and the Region Utility Engineer.

If the work is associated with the project, or if unrelated work is being done nearby, and the railroad or its contractor is performing the work, the Project Engineer should treat the neighboring work in the same manner that adjacent WSDOT work would be treated. (See *Standard Specifications*, Section 1-05.14 and Section 1-2.2H of this manual.)

Protective services may be called for when the Contractor is performing work on railroad facilities (first category above) or when the Contractor's work is conflicting or adjacent to a railroad facility that is not being changed. Typically, the railroad will determine the need for service, provide the protective services, and send the bill to WSDOT. There may be an agreement in place, or the railroad's actions may be unilateral. On all projects including railroad flagging, the Project Engineer will notify the Railroad Company when all work involving the railroad is physically complete.

The addition or revision of agreements with the railroad can be lengthy processes. The Project Engineer should stay alert for possible changes and the need for revisions to the agreement. When these arise, the Railroad Company and the Region Utility Engineer should be contacted early and often.

1-5 Surveying

1-5.1 Site Surveying

1-5.1A Permanent Monuments

Most permanent monuments which are in the construction zone are relocated by the establishing agency. Normally these monuments are relocated prior to beginning of construction, but if monuments are found within the construction zone, they must be preserved until they can be moved. If the urgency of construction does not allow time for the relocation of the monument, it must be properly referenced so it may be reset or relocated at a later time. When a monument is found within the construction area, the proper agency shall be notified promptly and requested to relocate the monument.

1-5.1B Property Corner Monuments and Markers

It is imperative that land plats and property corners be preserved. The 1973 Legislature enacted a Survey Recording Act, RCW 58.09, to provide a method for preserving evidence of land surveys by establishing standards and procedures for monuments and for recording surveys as a public record. When a general land office corner, plat survey corner, or property line corner exists in the construction zone, it is necessary to properly reference it and reset it after the construction work has been done. RCW 58.09.040 requires that, for all monuments that are set or reset, a record of the monument be filed on a Monumentation Map with the County Engineer in the county in which the corner exists and the original sent to the State Right of Way Plans Branch. Headquarters will forward a copy to DNR for their records.

1-5.1C Alignment Monumentation

During construction, alignment monumentation may be altered to fit field conditions. Such changes may include:

- Normally all PCs and PTs are to be monumented. Additional point on tangent (POT) monuments are necessary where line of sight is, or may in the future be obstructed by the horizontal or vertical alignment, buildings, or other barriers.
- When the right of way and the construction alignment do not coincide, the monumentation shall be such that the exact right of way as acquired can be positioned in the field. This will generally require, as a minimum, that the right of way alignment be monumented.
- When safety of the survey crew or survival of the monuments is an issue, monuments may be offset from the true alignment. An extra effort in accuracy must be made when setting offset monuments to ensure an accurate reestablishment of the true alignment. The monumentation, including monument locations, reference distances, stations, and bearings, is to be shown on the as built plans.

1-5.2 Construction Surveying

1-5.2A Surveying Provided by the State

Unless the contract states otherwise, the Project Engineer is responsible for providing all surveying needed to locate and define the contract work. The staking done in construction surveying must assure that the work will conform to the plans and must also conform to the Contractor's approach to the work. There are numerous survey techniques that will accomplish these objectives. Prior to each phase of the work, the Project Engineer must reach agreement with the Contractor concerning the method, location, and timing of construction staking. Once this agreement is reached, it must be shared with all WSDOT, Contractor, and subcontractor personnel who place or use construction stakes.

1-5.2B Contractor Surveying

If the contract requires the Contractor to provide some or all of the construction surveying, the Project Engineer is required to provide only the primary control points staked, marked, and verified in the field and the coordinate information for the main alignment points in the plans. The plan alignment and the field control points must be referenced to the same grid coordinate system.

The provisions for contractor surveying are intended to provide the stakes needed to inspect the work, as well as the primary function of locating and defining the work. If the survey stakes required by the contract do not provide the reference data needed for inspection, then the Project Engineer will have to provide additional survey work that is needed. As an alternative, a change could be negotiated with the Contractor to perform the added work.

The Contractor's survey work is a contract item, just like all other contract items. It must be inspected for adequacy and conformance with the contract. Once it is performed and inspected, it must be paid for.

The wise Project Engineer will inspect the survey efforts and check as much of the contractor's work as is practical. Any errors should be brought to the Contractor's attention for corrective action. The inclusion of contractor surveying in a project transfers the risk of survey errors to the Contractor. The Project Engineer must assure that the survey work of the Contracting Agency does not relieve the Contractor of that risk.

1-6 Inspection of Course Thicknesses

Tabulated below are the permissible deviations in measured thickness for specified depths of surfacing and paving. While these are the maximum deviations that can be allowed, the Project Engineer may impose tighter requirements for conforming to the plan dimensions where there is a reason to do so.

English

Material	Specified **Depth**	Max. Allowable Deviation at Any **One Point**	Average Depth Deviation for Entire **Project**
Untreated Surfacing	0 – 0.25′	-0.05′	-0.025′
and ATB	0.26 – 0.50′	-0.06′	-0.03′
	0.51 – 0.75′	-0.07′	-0.035′
	0.76 – 1.0′	-.08′	-0.04′
	Over 1.0′	-8%	-4%
Asphalt Concrete			
(single-lift)	0.08 – 0.15′	-0.045′	-0.015′
(multi-lift)	0.00 – 0.25′	-0.03′	-0.01′
	0.26 – 0.50′	-0.045′	-0.015′
	0.51 – 0.75′	-0.06′	-0.02′
	Over 0.75′	-0.075′	-0.025′

For asphalt concrete overlays with a specified depth of less than 0.08 foot, it will be the responsibility of the Project Engineer to ascertain the adequacy of the overlay depth in conformance to the plan.

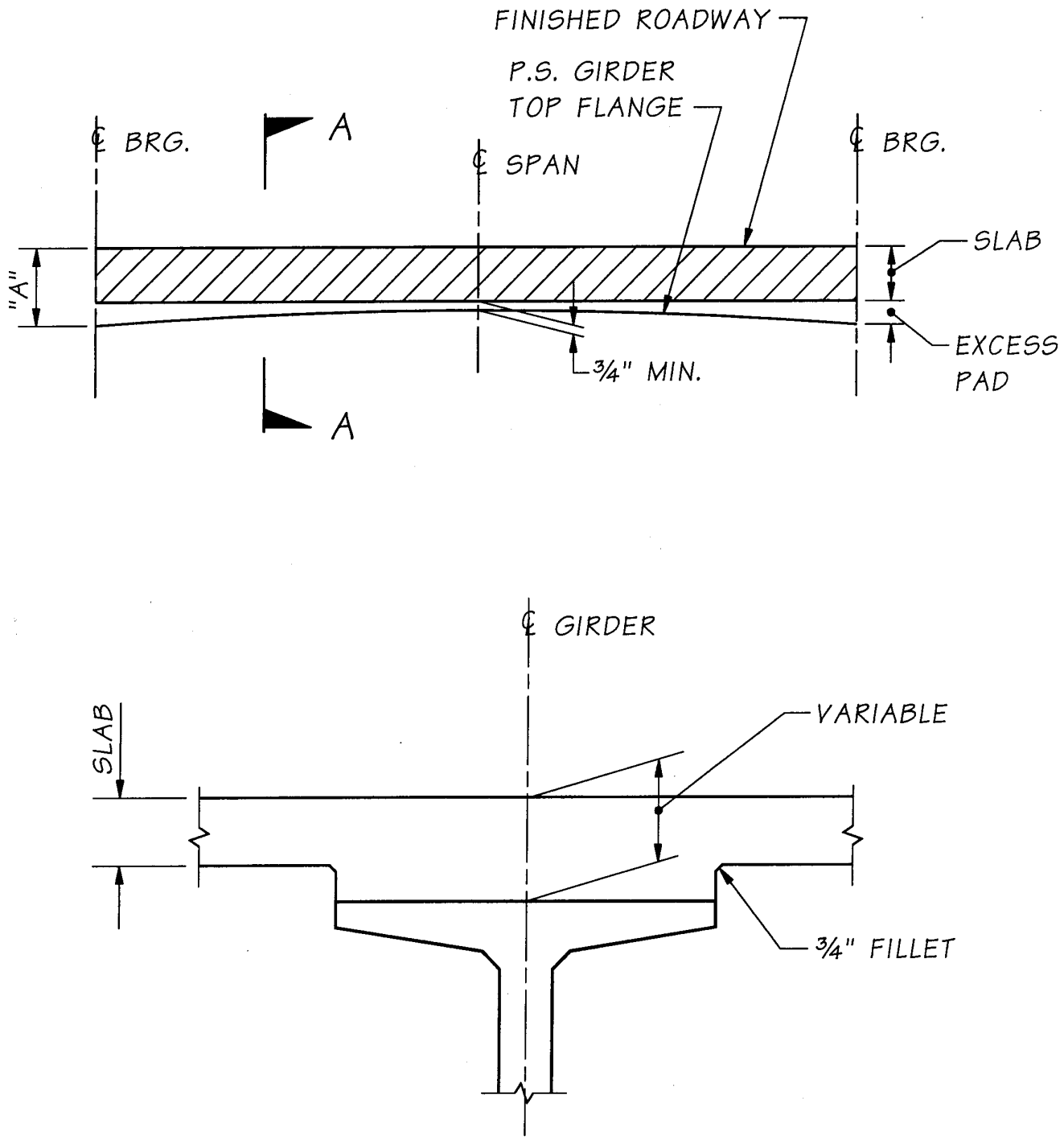

Section A-A
Figure 6-3

The State Materials Lab has published a manual entitled "Inspectors Guide for Prestressed Plant Inspection and Quality Control" which contains more detailed instructions for this work.

6.2.7B Prestressed Girder Camber

Precast prestressed girders start creeping up immediately after prestressing strands are released in the casting bed. Over time, creeping or girder deflection upward continues. Bridge plans estimate the expected creep at 120 days, from prestress release to deck placement, and designate the letter "D" for this deflection. Theoretical girder camber at mid span vs. actual girder camber measured in field, after girder erection, should be compared for compliance with *Standard Specification* 6-02.3(25)k.

The camber diagram is a parabolic curve. In order to have a smooth vertical profile the pad dimension on top of girder flange varies through the length of span (see Figure 6-3). This dimension is usually least (depending on the vertical profile curve) at center span and maximum at center line of bearings which bridge plans refer to as "A" dimension. The designation "C" is the amount of camber added to the deck grades to account for the anticipated downward girder deflection due to all superimposed loads (slab, overlay, sidewalks, utilities and traffic barriers).

Finished roadway grade elevations should be calculated along the center line of the prestressed girders at tenth point of each span. Camber values at tenth point stations need to be added to the finished profile grades to compensate for the girder deflection due to superimposed loads. These elevations are needed for setting deck slab forms and finishing screeds. Equation 6-1 calculates the camber at any point along the span.

$$\mathbf{Y = C - 4C\,(M - 0.5)^2} \qquad \text{(Equation 6-1)}$$

Y = camber at any point along the span length in inches (mm)

C = deflection due to superimposed dead load at span mid point in inches (mm)

M = location of span in decimal percent

The following example shows how tenth point span camber can be calculated.

Example:

Calculate camber at 0.20 point span for a prestress girder when girder length (ctr. - ctr. bearing) is 174.2 feet (53.085 m) and "C" dimension at mid span given as 3 inches (75 mm) (see Figure 6-4).

$$Y = 3 - 4(3)\,(0.20 - 0.5)^2$$

$$Y = 1.92 \text{ inches (48 mm)}$$

6-2.8 Post-Tensioned Bridges

The construction of cast-in-place post-tensioned bridges requires considerable attention to details of construction by the Contractor and Inspectors. **The State Construction Office is available to present job-specific training on post-tensioned bridges**. They should be contacted after the post-tensioning shop drawings have been approved and before post-tensioning ducts and anchors are to be placed.

In addition to the falsework and form plans for the structure being approved by the Bridge and Structures Engineer, post-tension detail plans shall be submitted for approval as shown in the Shop Plans and Working Drawings Table in Chapter 1-2.4H of this manual. Included in these details

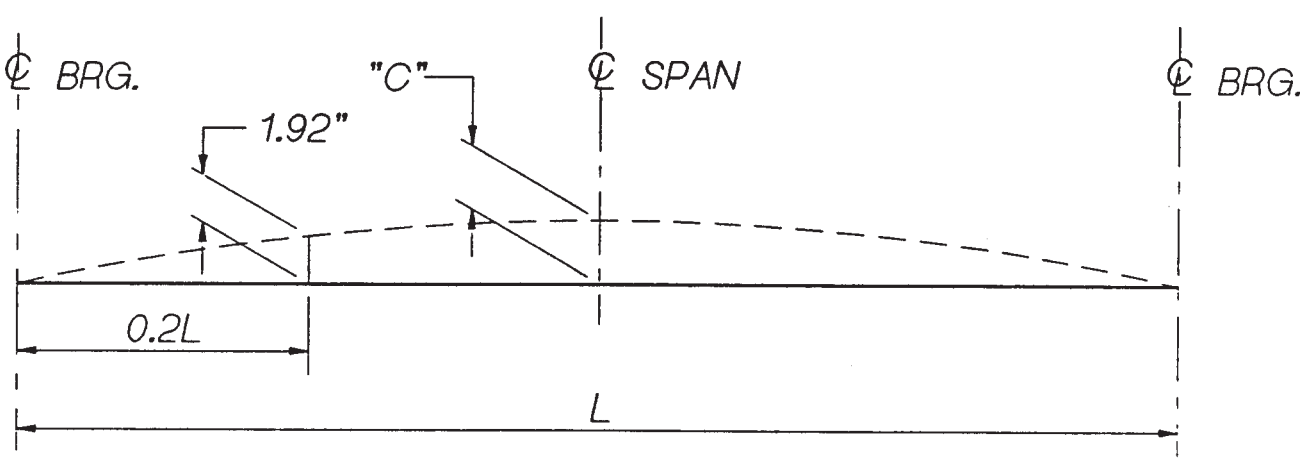

Figure 6-4

8-0 Introduction

Many of the specifications in Division 8 of the *Standard Specifications* are complete and do not require additional instructions for proper staking, inspecting, and documenting the construction, and will not be covered in this manual.

Although many items of construction in this chapter are specialized, the procedures of sampling the materials, documenting the construction, and requiring that the work be done in accordance with the specifications is not different from other types of highway construction work.

8-1 Erosion Control

8-1.1 General Instructions

Project sites require erosion prevention when vegetation is removed, when soil is disturbed, or when water flow has the potential to cause erosion. Vegetation stabilizes soils. It slows or prevents erosion by intercepting rainfall, reducing the impact of raindrops, and retains and retards runoff volume.

Temporary Erosion and Sediment Control (TESC) Plans are designed to prevent erosion and any damage to the site, adjacent properties, and the environment. When creating the TESC Plan, designers try to account for all of the inherent risks on each site and plan to minimize these risks through the use of design, procedural, and physical Best Management Practices (BMPs). The effectiveness of TESC plans will vary based on how well designers assessed risks, how unpredictable elements such as the weather behave during construction, and the level of effort put forth by the construction staff. Although we try, it is truly impossible to account for all of the risks associated with a project before construction begins. Therefore, the responsiveness of the construction staff to changing conditions is the most important determining factor in whether or not the plan is effective.

The original plan is a starting point only. The Contractor can either adopt the WSDOT plan in the contract or submit their own TESC plan for approval. As a project progresses, new risks emerge and must be addressed in order for the TESC plan to remain effective. Prevention is better, cheaper, and easier than repair or mitigation after a plan fails. By creating and maintaining an effective TESC plan, WSDOT will save money, time, and prevent environmental problems. Should an environmental violation occur, ie an action not in compliance with environmental standards, permits, or laws, during implementation of the erosion control measures, refer to Section 1-2.2J for the appropriate notification and corrective action procedures.

It is important to clearly understand the TESC plans prior to construction. The actual site conditions may not match those described in the original plan due to development in the area, changed construction dates, and inaccuracies of the original plan. Newly paved areas or housing developments located up gradient from the project site may increase surface water flows to the site. Evaluating current site conditions is an essential feature of the TESC plan review.

When conducting the initial evaluation the inspector should walk the site with the TESC plan in hand. If the designer filled out the Site Description and Information Survey and the Site Erosion Risk Checklist, use them when walking the site, adding additional notes as needed. If available the designer should go along on the walk through. The survey and the checklist can be used as planning tools to verify the current site conditions and determine whether changes to the TESC plan are necessary. If completed forms do not exist, use a blank one. Mark any needed changes on the plan sheets so that the necessary changes can later be shown to the contractor.

All WSDOT projects must comply with environmental laws, and with required permits. When working around sensitive areas, applicable permits are attached to the contract as addenda. These permits must be carefully reviewed to ensure that the TESC plan is meeting the permit requirements. It is important to remember that these permits are sometimes obtained after the main design work was done. If the original plan does not meet the permit requirements, the plan must be modified to meet the new permit requirements.

Federal, state and local water quality regulations prohibit the discharge of turbidity from construction activities into adjacent water bodies and require WSDOT to use approved prevention and control methods. Turbidity is defined as the visual clarity of the water and is a measure of its condition or health. Turbidity is really a measure of how much stuff is in the water (suspended and colloidal matter, such as clay, silt, organic matter, inorganic matter, and microorganisms). See Section 710, Erosion Prevention and Sediment Control, of the *Roadside Manual,* M 25-30, for additional information. The most important factors associated with erosion control problems include, offsite runoff, groundwater, unstable slopes, poor soils, and opening up too much soil in the wet season. When evaluating a plan, pay close attention to identifying:

- All potential sources of surface water runoff including offsite water (adjacent developments, our own impervious surfaces, natural drainages, etc.)–Offsite water should be routed around the project area.
- Groundwater – identify groundwater sources and potential impacts from groundwater.

- Cut and Fill slopes or Unstable slopes – make sure that slopes are covered and exposed according to the seasonal requirements. Also look for signs of slumping and seepage from saturated slopes.
- Areas of problematic soils
- Concentrated Flows – make sure that flowing water does not damage slopes and that it is routed into appropriate conveyances.
- How changes in construction dates will effect the amount/type of wet-season work.

  In some cases it may be necessary to select replacement BMPs because changing conditions make other choices more favorable. Questions you should ask yourself as you review the plan's BMPs are shown below:

- Preserving Existing Vegetation – Can you reduce the limits of disturbance? Are the limits of disturbance clearly marked?
- Stabilized Construction Entrance – Can you select a better location than what is shown on the plans? Are more needed? Are entrances properly graded to prevent runoff to public roads?
- Inlet/Outlet Protection – Can the prescribed protection devices handle expected flows?
- Check Dams – Are they sized and spaced properly? Have we chosen the best material for the site?
- Perimeter Control – Are silt fences in the right places?
- Slope Drains – Are we prepared to convey concentrated flows past slopes?
- Temporary Curbing – Are we providing temporary curbing to keep concentrated flows off of erodible areas?

  In rural areas, Soil Conservation District personnel are available for consultation in all matters related to erosion control. They know the local areas and their interests are similar to ours. If the local soil conservation district has not been consulted during the design stage, they should be consulted during the construction stage.

Whenever the ground slopes so the surface water would drain over the cut slope, the Project Engineer should investigate the need for constructing ditches longitudinally along the roadway to intercept the water or making use of down drains. A review of soil types is quite important. If erodible soils are in evidence, special consideration must be given to reducing erosion when these materials are encountered in cuts or used in embankment construction on the project.

There will be times when subsurface water is encountered in the slopes of a cut section. The Project Engineer should notify the Regional Operations/Construction Engineer if this occurs. In most cases, some corrective action will be necessary whether it be perforated pipe or other methods. There are some cases where the Regional Operations/ Construction Engineer may want to consult with the Materials Engineer on matters and ways of controlling the flow of subsurface water.

8-1.2 Construction Practices

It is important to partner with the environmental agencies early in the construction process. Early, open communication sets up a good working relationship that may prove invaluable later on if problems occur. Permit requirements normally include notification to environmental agencies prior to conducting construction activities. Let them know what you will be doing and how you plan on maintaining regulatory compliance throughout the duration of the project. On some projects it may be advisable to invite them to part of the preconstruction meeting when environmental issues are discussed.

Many problems can be prevented in the initial stages of construction if the Contractor will protect the roadway as the work progresses to prevent water from running over fill slopes by sloping or crowning the area and eliminating duck ponds or low spots. Poor construction practices can, in the long run, cost the Contractor additional money to correct the damage.

Encourage the contractor to help develop solutions that are compatible with their construction activities. Many contractors have extensive field experience with erosion control. Following contractor suggestions can sometimes prevent problems in the long run. Some suggestions, however, weaken plans and put WSDOT at greater risk of problems. Such proposals should be rejected.

The contractor's suggested modifications may lead to additional costs, but if they properly identify the risks that we missed, or suggest more practical solutions, those ideas should be adopted. Getting everyone involved early in the process will help you come up with effective solutions that can be agreed upon by everyone.

Inspectors should identify the certified Erosion and Sediment Control (ESC) Lead for the site. Certification is gained by completing the Construction Site Erosion and Sediment Control Certification Course given by WSDOT, AGC Education Foundation or other WSDOT approved training sources. Contractors are given certificates showing that they have completed the required training. If the contractor does not have a certificate on hand we can

9-1 General 1
9-1.1 Introduction 1
9-1.2 Requirements 1
9-1.3 Sample and Test Numbering 1
9-1.3A Preliminary Samples and Tests 1
9-1.3B Acceptance Samples and Tests 1
9-1.3C Vacant 1
9-1.3D Verification Samples and Tests 1
9-1.4 Form Letters 1
9-1.5 Project Material Certification 1
9-1.5A Record of Materials (ROM) 6
9-1.5B Approval of Materials 6
9-1.5C Vacant 7
9-1.5D Materials Fabrication Inspection Office — Inspected Items Acceptance 7
9-1.5D(1) Inspected Items, Stamps and Tagging Identification 7
9-1.5E Manufacturer's Certificate of Compliance 9
9-1.5F Concrete Pipe Acceptance Report 9
9-1.5G Fabrication Inspection Documentation Requirements 9
9-1.6 Control of Materials 10

9-2 Vacant 10

9-3 Vacant 10

9-4 Specific Requirements for Each Material 10
9-4.1 Portland Cement or Blended Hydraulic Cement 11
9-4.2 Bituminous Materials 12
9-4.3 Hot Melt Traffic Button Adhesive 12
9-4.4 Concrete Aggregates 13
9-4.5 Surfacing Aggregates (Crushed Screening, Crushed Cover Stone, Ballast, Shoulder Ballast, Crushed Surfacing Base and Top Course) 13
9-4.6 Aggregates for Asphalt Concrete and Asphalt Treated Base 13
9-4.7 Asphalt Concrete and Asphalt Treated Base 14
9-4.8 Mineral Filler 14
9-4.9 Gravel Base and Bank Run Gravel for Trench Backfill 14
9-4.10 Pit Run Aggregates 15
9-4.11 Vacant 15
9-4.12 Premolded Joint Filler 15
9-4.13 Elastomeric Compression Seals 15
9-4.14 Two Component Poured Rubber Joint Sealer 16
9-4.15 Hot Poured Joint Sealant 16
9-4.16 Concrete Culvert, Sewer, Drain, and Underdrain Pipe 16
9-4.17 Galvanized Steel, Pipe Arch, Aluminized Steel and Aluminum Corrugated Metal Culvert, Drain Pipe and Perforated Underdrain Pipe 17
9-4.18 Perforated Underdrain Pipe 17
9-4.19 Structural Plate Pipes and Arches 17
9-4.20 Gray-Iron Castings, Steel Castings, Ductile-Iron Castings 18
9-4.21 Sanitary Sewers 18
9-4.22 Steel for Bridges 19

9-4.23	Unfinished Bolts (Ordinary Machine Bolts), Nuts, and Washers	19
9-4.24	High Strength Bolts, Nuts and Washers	19
9-4.25	Anchor Bolts	19
9-4.26	Reinforcing Bars for Concrete	20
9-4.27	Epoxy Coated Reinforcing Steel Bars for Concrete	20
9-4.28	Mechanical Splices	20
9-4.29	Rebar Chairs, Dobies, and Spacers	20
9-4.30	Dowels and Tiebars for Concrete Pavement, incl. Epoxy Coated	21
9-4.31	Wire Reinforcement for Concrete	21
9-4.32	Bridge Approach Slab Anchors	21
9-4.33	Prestressing/Post Tensioning Reinforcement — Strand	21
9-4.34	Prestressing/Post Tensioning Reinforcement — Bar	22
9-4.35	Paints for Structures	22
9-4.36	Structural Timber and Lumber — Untreated	22
9-4.37	Treated Timber and Piling	23
9-4.38	Piling — Untreated	23
9-4.39	Steel H-Piling	23
9-4.40	Hollow Steel Piling and Jack Casing	23
9-4.41	Precast Concrete Catch Basins, Manholes, and Inlets	23
9-4.42	Riprap, Quarry Spalls, Slope Protection, and Rock Wall	24
9-4.43	Semi-Open Slope Protection	24
9-4.44	Plant Material	24
9-4.45	Topsoil Type A	24
9-4.46	Seed	25
9-4.47	Fertilizer	25
9-4.48	Mulch	25
9-4.49	Irrigation System	26
9-4.50	Fencing	26
9-4.51	Beam Guardrail, Guardrail Anchors, and Glare Screen	27
9-4.52	Guardrail Posts and Blocks	27
9-4.53	Miscellaneous Precast Concrete Products	27
9-4.54	Prestressed Concrete Products	27
9-4.55	Raised Pavement Markers, Types 1, 2, and 3	28
9-4.56	Signing Materials	28
9-4.57	Concrete Curing Compounds	28
9-4.58	Admixtures for Concrete	29
9-4.59	Plastic Waterstop	29
9-4.60	Epoxy Systems	29
9-4.61	Resin Bonded Anchors	30
9-4.62	Gabion Baskets	30
9-4.63	Sign Structures	30
9-4.64	Conduit	30
9-4.65	Electrical Conductors	31
9-4.66	Signal, Luminaire, and Strain Poles	31
9-4.67	Anchor Bolts for Luminaire, Signal Poles, and Sign Structures	31
9-4.68	Luminaires and Lamps	32
9-4.69	Water Distribution System	32
9-4.70	Elastomeric Bearing Pads	32
9-4.71	Fabric Bearings Pad	33
9-4.72	Precast Concrete Barrier and Wall Panels	33
9-4.73	Safety Bars, Cattle Guards, Sign Mounting Brackets, Steel and Special Guardrail Posts, Steel Sign Posts	33
9-4.74	Metal Bridge Rail	33
9-4.75	Construction Geotextiles	34

9-4.76 Concrete 34
9-4.77 Water for Concrete 34
9-4.78 Expansion Joints 35
9-4.79 Controller Cabinet Assembly 35
9-4.80 Miscellaneous Temporary Erosion and Sediment Control Items 35

9-5 Guidelines for Job Site Control of Materials 35
9-5.1 General 35
9-5.2 Sampling and Testing Schedule 36
9-5.2A General 36
9-5.2B Reducing Frequency of Testing 36
9-5.2C Sampling and Testing for Small Quantities of Materials 36
9-5.3 Point of Acceptance 36
9-5.4 Basis for Acceptance 37
9-5.4A Basis for Acceptance — Statistical Evaluation 37
9-5.4B Basis for Acceptance — Non-Statistical Evaluation 37
9-5.5 Testing Staff Qualifications and Independent Assurance Program 38
9-5.5A Testing Staff Qualification 38
9-5.5A(1) General 38
9-5.5A(2) Construction Tester Qualification Rules 38
9-5.5A(3) Personnel Qualification Policy 39
9-5.5A(4) Laboratory Qualifications Policy 40
9-5.5A(5) Construction Tester Qualification Program 40
9-5.5A(6) Regional Materials Laboratory Responsibilities 40
9-5.5A(7) Project Engineer Responsibilities 41
9-5.5A(8) The State Materials Laboratory Responsibilities 41
9-5.5A(9) Tester Performance Review 41
9-5.5A(10) Review Actions for Unsatisfactory Performance 41
9-5.5B Independent Assurance (IA) Program 42
9-5.5B(1) General 42
9-5.5B(2) Independent Assurance Inspector (IAI) 42
9-5.5B(3) Independent Assurance Evaluations 42
9-5.5B(4) Evaluation of Independent Assurance Samples Testing 43
9-5.5B(5) Comparison of Independent Assurance and Acceptance Test Results 43
9-5.6 Tolerance Limits 44
9-5.7 Acceptance Sampling and Testing Frequency Guide 48

9-6 Radioactive Testing Devices 50
9-6.1 Administration and Safety 50
9-6.2 Radiation Administration Officer (Region Materials Engineer) 51
9-6.3 Radiation Safety Officer 51
9-6.4 uthorized Operators 52

9-7 Vacant 52

9-8 WSDOT Testing Methods 52
9-8.1 Calibrated/Verified Equipment for Testing 52
9-8.2 Field Test Methods for Materials 53
9-8.2A Testing Modules 54
9-8.2B Individual Tests Method 55
9-8.2C Contents for Test Procedures in This Manual 56

9-1 General

9-1.1 Introduction

The quality of material used on the project will be evaluated and accepted in various ways, whether by testing of samples, visual inspection, or certification of compliance. This chapter details the manner in which these materials can be accepted.

9-1.2 Requirements

Requirements for materials are described in Section 1-06 and Division 9 of the *Standard Specifications for Road, Bridge and Municipal Construction* (M 41-10). Tolerance limits and a procedure for acceptance of certain materials are given in Chapters 9-5.4 and 9-5.6. For inspection of course thickness, the maximum deviations for measured thickness of surfacing and paving see Chapter 1-6 of this manual.

9-1.3 Sample and Test Numbering

A separate series of numbers, starting with No. 1 in each instance, shall be used for acceptance, independent assurance, and verification samples for each type of material for which there is a separate bid item. Verification samples shall be referenced to the corresponding Manufacturer's Certificate of Compliance.

9-1.3A Preliminary Samples and Tests

Preliminary samples are intended to show the general character of the materials available or proposed for use. The sample may be taken from a natural deposit, the general stock of a dealer, or elsewhere. The material sampled may require further treatment before it will meet the specification requirements. Preliminary samples are a basis for approving which aggregate site or brand of material will be considered for use. Deliveries cannot be accepted on the basis of preliminary samples unless the samples represent an identified lot of materials.

Unless specified for a particular purpose, preliminary sampling and testing of materials from a potential source are not mandatory functions. It is to be performed when requested by the Project Engineer, or the State Materials Laboratory on the Request for Approval of Material (DOT Form 350-071).

In order to insure consistency in sampling for aggregate sources which will be approved for an extended period of time, the preliminary sample must be witnessed or taken by a designated representative of the Regional Materials Engineer.

Before sampling, check to see whether previous preliminary test reports are available. If preliminary test reports are available and confirm that the material meets the contract documents, additional tests may not be needed. If in doubt the State Materials Laboratory is available to provide assistance.

9-1.3B Acceptance Samples and Tests

Acceptance samples and tests are defined as those samples tested for determining the quality, acceptability, and workmanship of the materials prior to incorporating the materials into the project. The results of these tests are used to determine conformance to the contract documents. The minimum frequency for sampling and testing of acceptance samples is detailed in Chapter 9-5.7 of this manual.

9-1.3C Vacant

9-1.3D Verification Samples and Tests

Verification samples and tests are used for making checks on the reliability of a manufacturers test results when acceptance of the material is based upon a Manufacturer's Certificate of Compliance.

9-1.4 Form Letters

A number of form letters have been prepared as an aid to the Project Engineer in transmitting information to the laboratory. In order to minimize delays to completion of material testing, transmittal letters should include all the information that is pertinent to the sample in question. In order to assist the laboratory, copies of the transmittal letters should be retained in the Project Engineers Office. The following is a list of the forms that may be used for transmittal of samples and/or information to the materials laboratory:

350-009	Concrete Test Cylinder Transmittal Letter
350-016	Asphalt Sample Label
350-026	Preliminary Sample Transmittal Letter
350-040	Proposed Mix Design
350-056	Sample Transmittal
350-071	Request for Approval of Material
350-074	Field Density Test
350-092	Asphalt Concrete Pavement Compaction Control Report
350-114	Summary Report of Acceptance Sampling and Testing
350-115	Contract Materials Checklist
351-015	Daily Compaction Test Report
410-025	Transmittal of Falsework, Form and Shop Drawings

9-1.5 Project Material Certification

The Project Engineer is responsible for obtaining all required materials documentation or otherwise ensuring that all required materials testing is completed, all with satisfactory results, prior to the materials being incorporated into the project. The Project Engineer is also responsible for maintaining a successful accounting for the materials incorporated into the project in order to support the Region's Certification of Materials. Management and accounting for materials used in the construction of a project are to be administered in the same manner regardless of its funding source; Federal, State, or a combination of both.

The Region is responsible for periodic reviews of each project's materials documentation at the Project Engineer's office. Upon completion of the project the Region will prepare a Region Materials Certification letter listing all variances that were identified and their resolution. On projects that involve Federal participation where material deficiencies are documented, these deficiencies must be resolved with the State Construction Office through the Region before the Region Certification of Materials can be completed. On projects that involve State Funds only, documented deficiencies must be resolved with the Region prior to the Region Certification of Materials. The Regional Administrator or their designee is responsible for signing and distributing the certification letter.

The State Materials Laboratory will also perform compliance reviews on a sampling of completed projects statewide where the materials have been certified.

Definitions

Certification: A Region Materials Certification based on a documented evaluation of the project's materials inspection, sampling, testing, and other materials acceptance activities for their conformance to the contract documents, *Standard Specifications* and this manual. The certification reflects the project's conformance with the Record of Material as adjusted by the Project Engineer for:

1. Actual project quantities utilized,

2. Acceptance practices as provided for in this manual including Chapters 1-2.8 and 9-5.2, and Non-critical items,

3. Adjusted sampling/testing frequencies as provided for in Chapter in 9-5.2, and

4. Work added by Change Order.

Variance: An identified difference between the materials acceptance requirements noted in this manual, the contract documents, the *Standard Specifications,* and a review of the completed projects Record of Materials. All variances must be noted. Such notations will need to include the basis by which the material was accepted and how the requirements for that material were met. Any variance between the recognized acceptance requirements and the Project Engineers use of the material must be resolved with either the Region, State Construction Office, and/or State Materials Laboratory, as appropriate.

Project Material Certification Process

Environmental and Engineering Programs Division (EEPD)

1. State Materials Laboratory (Documentation Section)

   a. Prepare the initial Record of Material for all major items of materials listed in the contract.

   b. Provide technical support, certification guidelines, format, and suggested documents. See Figure 9-1 for Project Materials Checklist (DOT Form 350-115, latest version). See Figure 9-2 for examples of the Region Materials Certification letter and its distribution.

   c. Conduct Compliance Reviews on a sampling of completed projects statewide where the Region has certified the materials.

2. The State Construction Office

   a. Receives variances for federal aid projects identified during the Region's materials certification review.

   b. Coordinates FHWA and Region to determine funding eligibility for variances.

   c. Prepares response to Region identifying degree of participation (Letter of Resolution).

3. Accounting Office

   a. The federal aid section will make the appropriate transaction as necessary upon receipt of the Letter of Resolution.

   b. Voucher a federal project only after receiving a copy of the Project Materials Certification, the Letter of Resolution and assure that the appropriate credit has been made to FHWA.

   c. Attach a copy of the Letter of Resolution to the Journal Voucher sent to FHWA.

Region

1. Project Engineer

   a. Sets up and maintains a materials documentation system.

   b. Maintains and monitors a current Record of Material ensuring materials certification throughout the course of the project.

   c. Identify, document, and justify all materials variances including determination and acceptance of noncritical items in accordance with Chapter 1-2.8 of this manual. Justification may be any of the following:

      1. Follow requirements of Section 1-2.8C(3) if the deficiency is a lack of manufacturer's certification.

      2. Satisfy the deficiency through additional testing or documentation.

      3. Demonstration that the existing documentation is adequate (for example, 19 out of 20 test were taken).

      4. Demonstration that the cost of obtaining the missing documentation will not be justified by the benefits received.

   d. Identify and document the determination and acceptance of all non-critical items in accordance with Section 1.2-8A of this Manual.

   e. Prepares the Region Materials Certification package, which includes the Region Materials Certification letter, identified variances, Letters of Resolution for all identified variances on federal

Washington State Department of Transportation

Project Materials Checklist

Contract Number	Sign Route	Federal Aid Number(s)
Project Title		

		Yes	No*	N/A	Item No.(s)
1	All materials/products used in the construction of this project, including items added by Change Order, have been approved & are listed on the Record of Materials.		**		
2	The actual materials/products used along with the actual basis for acceptance of those materials and products has been documented.		**		
3	All uses of proprietary items, including those listed in the Special Provisions and/or contractor provided QPL items, are documented.				
4	When required, change of material/product letters and a revised RAM were initiated by the contractor.				
5	A Change Order has been completed for all materials accepted and incorporated into the project, but which failed to meet the required specifications when tested.		**		
6	An appropriate credit has been received for all non-specification materials used.		**		
7	Modifications to testing/inspection procedures, including CM 1-2.8A, have been explained and documented by the Project Engineer prior to construction of the item.				
8	Acceptance based on Sampling and Testing for Small Quantities has been documented. CM Chapter 9-5.2C.				
9	Where Manufacturers Certifications were not provided prior to material or product installation, the Project Engineer has provided specific prior approval for the work to continue in accordance with 1-06.3 of the Standard Specifications.				
10	All required acceptance actions and documentation were completed and satisfactory test results demonstrated before payment was made on each item.				
11	Acceptance sampling & testing frequencies for each item accepted is adequate for the total quantities of those items incorporated into the project.		**		
12	All Acceptance Sampling and Testing completed by the Project Engineer utilized Qualified Testers and Verified Testing Equipment in accordance with the Qualified Tester program.				
13	All Fabrication Inspected items accepted have been documented in accordance with CM 9-1.5C.		**		
14	The contractor has submitted all required Manufacturer Certifications and Mill Certifications, the Certifications represent the specification requirements noted in the contract, and quantities represented by the certifications match or exceed the final quantities used.		**		
15	All required catalog cuts and/or shop drawings have been approved and are on file.		**		
16	All required Certificates of Materials Origin have been received and are on file. (Fed Aid projects only)		**		

***** Checklist items marked **"No"** constitute a Materials Certification deficiency. Each **"No"** requires the contract item number for the affected item to be shown along with an attachment to the Materials Checklist detailing the circumstances of use, the method used for acceptance of the material, the Project Engineer's evaluation of the material, suitability for its application, and determination as to whether or not it may have met the specification in spite of the materials documentation oversight. If the project is Federally funded, the Project Engineer should also include a recommendation for Federal participation in light of the use of undocumented materials.

****** These specific materials deficiencies on Federal Aid projects must be resolved through OSC Construction and may result in the loss of Federal participation.

Project Engineer — Date

Region Construction Engineer/Operations Engineer/Area Engineering Manager — Date

Figure 9-1

Washington State
Department of Transportation
Douglas B. MacDonald
Secretary of Transportation

Transportation Building
P.O. Box 47300
Olympia, WA 98504-7300
360-705-7000
TTY:1-800-833-6388
www.wsdot.wa.gov

Kevin J. Dayton P.E.
State Construction Engineer
P.O. Box 47354
Olympia, WA 98504 - 7354
MS: 47354

Cont. No: SR-
F.A. No.:
Section:

Date Completed:

Dear Sir:

This is to certify that:

The results of acceptance sampling and testing completed for the project referenced above, confirm that the materials incorporated into the construction of the project were found to have met the requirements as outlined in the contract plans, provisions, and Standard Specifications.

There were no exceptions.

OR:

This is to certify that:

The results of the tests on acceptance samples indicate that the material incorporated in the construction operations controlled by sampling and testing were in conformance with the approved plans and specifications.

Exceptions to the plan and specifications are explained on the attached sheet.

Very truly yours,

Regional Administrator

RGF
Attachment

cc: FHWA, 40943
State Materials Engineer, 47365
Accounting Chief, 47420
Regional Oper./Const. Engineer
Project Engineer

Figure 9-2

aid projects and resolution actions taken. This package also includes a completed Contract Materials Checklist (DOT Form 350-115). The certification package is submitted to the Region Construction Manager for review. The certification letter is to be addressed to the State Construction Engineer.

2. Regional Operations/Construction Office

   a. The Region shall review projects according to Chapter 10-5 of this manual for documentation requirements including materials.

   b. Resolve materials variances identified by the Project Engineer and the Region's review of materials documentation at the Region level for State funds only projects. Resolve materials variances on Federal aid projects through contact with the State Construction Office.

   c. Review certification package for completeness.

   d. Submit certification letter to Regional Administrator for signature.

   e. Distribute signed Region Materials Certification letter. The original is submitted to the State Construction Engineer, with copies sent to FHWA, State Materials Engineer, State and Accounting Chief. A copy of the Letter of Resolution shall be attached if there are any variances.

3. Regional Administrator, or designee

   a. Signs the certification letter.

4. State Administration and Support Accounting Office

   a. Completes the necessary paperwork.

Compliance Review for Materials Certification Process

Compliance reviews will be performed by the State Materials Laboratory to document how well project records conform to materials certification standards. Upon receipt of a completed Region Materials Certification letter from the Regional Operations/Construction Office, the State Materials Laboratory will notify the Region within 60 days of intent to perform a compliance review on that project. If the project is selected for a compliance review, it will be scheduled within 180 days of notification to the Project Office.

The compliance review will normally be conducted at the project office unless arrangements are made for it to be conducted elsewhere.

The goal is to perform a compliance review on at least one project per project office every two years. Compliance reviews may be conducted more frequently as appropriate. Projects will be selected with consideration given to project size and complexity.

The records maintained and developed by the Project Engineer for acceptance of the materials and the identification of variances will be reviewed.

Upon completion of the review, the findings will be discussed with the Project Engineer and/or his representative. A report of the findings will be prepared and sent to the Project Engineer within 60 days after the review. A copy will be sent to the Regional Documentation Engineer, Construction Manager, State Construction Office, and the FHWA Division Office.

If the Compliance Review shows a discrepancy of a serious nature, the Construction Manager will correct any such discrepancy in the process.

The following items of documentation are required to develop the Material Certification and must be made available for review:

1. Record of Materials, as revised and amended by the Project Engineer (ref. 9-1.5A)

2. Request for Approval of Material (ref. 9-1.5B)

3. Comparison of Quantities (Region Final)

4. List of Change Orders

5. Reduced Frequency Testing Approval

6. Test Results

   a. Acceptance Test Reports

   b. Assurance Test Reports (where applicable)

   c. Independent Assurance Test Reports (where applicable)

   d. Verification Test Reports (Cement and Liquid Asphalt)

7. Manufacturer's Certificate of Compliance (ref. 9-1.5E)

   a. Concrete Pipe Acceptance Report (ref. 9-1.5F)

   b. Lumber Grading Certificate

   c. Certification of Cement Shipment

   d. Notice of Asphalt Shipment or Certified Bill of Lading

   e. Any other certificate required by the contract documents

8. Inspected Items Acceptance (ref. 9-1.5D)

9. Catalog Cuts (Product Data Sheet)

10. Small Quantity Acceptance Documentation

11. Proprietary or Qualified Products List (QPL) Item Acceptance Documentation (ref. 9-1.5B)

12. Sign Acceptance Report (ref. 9-1.5G)

13. Field Acceptance Reports, Field Note Records, and/or Inspectors Daily Reports

14. Follow-up actions for excessive variations between the Acceptance Sample and the Independent Insurance Sample Test Results (when applicable)

9-1.5A Record of Materials (ROM)

A listing of all major construction items for each project is provided by the State Materials Laboratory, establishing a Record of Materials (ROM) specific for that project. For these major construction items, the ROM identifies the kinds and quantities for all materials deemed to require quality control testing. It further identifies the minimum number of acceptance and verification samples that would be required for acceptance of those materials. The minimum number of acceptance tests is based on the planned quantities for the project and should be adjusted for the actual quantities used. Also listed are those materials requiring other actions, such as fabrication inspection, Manufacturer's Certificate of Compliance, shop drawings, or catalog cuts.

The acceptance action and/or numbers of samples listed are the minimum requirements for the Project Engineer's acceptance of those materials and the minimum requirements necessary for the Region's certification for the materials used on that project. The State Materials Laboratory will forward the Record of Materials electronically to the Regional Materials Engineer, and Project Engineer shortly after the contract is awarded. The copy submitted to the Project Engineer is intended as a tool to assist the project office in tracking the samples approved, samples tested, Manufacturer's Certificate of Compliance, shop drawings, catalog cuts received, and other pertinent data necessary for the Project Engineers and the Regions certification of materials.

The acceptance requirements shown on the Record of Material may be modified by the Contractors specific Requests for Approval of Material. In addition the ROM is based on the State Material Laboratory's review of the major items of construction identified by the contract Summary of Quantities. Reviewing the contract plans and provisions may also identify additional materials documentation requirements as well as major construction items that require additional materials not accounted for in the State Material Laboratory's initial review of the project. These additional materials documentation requirements should be added to the ROM and tracked for completion throughout the course of the project work.

The accuracy of the ROM and Certification of Materials is largely the responsibility of the Project Engineer.

Where the ROM is not clear or there appears to be opportunities to adjust the acceptance requirements that have been identified, the Project Engineer is encouraged to contact the Region Materials Engineer or the State Materials Laboratory for assistance.

In order to ensure clarity upon completion of the work and to allow for easy certification of the project by both the Project Engineer and the Region, it is important that the project ROM be accurate and actively maintained throughout the course of the project. Any changes to the acceptance requirements, additional materials used, or any additional materials added to the project by change order should be accurately documented and tracked in the project Record of Materials.

9-1.5B Approval of Materials

To fulfill the requirements of *Standard Specifications* Section 1-06.1, the Contractor must notify the Engineer of all proposed materials prior to use. This may be accomplished by a Qualified Product List (QPL) submittal or by submitting a Request for Approval of Material (RAM) (DOT Form 350-071). Approval of the material does not necessarily constitute acceptance of materials for incorporating into the work. Additional acceptance actions, as noted by the code on the RAM or QPL must be completed prior to the material being used in the work.

Where the Contract Documents list products by specific name and model, and for which no additional requirements are stated (proprietary products), the Contractor needs only to complete the RAM indicating to the Engineer the intended choice. The Engineer shall approve the RAM, noting the page number where it is listed as a proprietary product in the Contract Documents.

Qualified Products List — Submittals

Products listed in the QPL have been found capable of meeting the requirements of the Standard Specification or General Special Provision under which they are listed and, therefore, have been "Approved." These may be "Accepted" by fulfilling the requirements of the Acceptance Code and any notes that apply to the product. Instructions are given in the QPL for processing QPL submittals. The Engineer shall review the submittal of the material for consistency with the Bid Item and shall promptly notify the Contractor of any concerns, working toward resolving these with the Contractor. QPL submittals inconsistent with the intended use for the Bid Item should be marked "unacceptable for intended use" and returned to the Contractor.

Request for Approval of Material — Submittals

Requests for materials not included in the QPL shall be submitted using the RAM form. Aggregate Sources will be approved by consulting the Aggregate Source Approval database for the use intended. Fabrication Facilities, Nurseries, and Concrete Batch Plant approvals will be determined by the use of other reference databases.

The Engineer may use the QPL as a reference source for coding products submitted on a RAM. The specific product listed on the RAM must be identified by make, model, batch, color, size, part no., etc. and correspond exactly to the approved QPL product. The product must also be listed in the QPL under the appropriate Standard Specification for the intended use as indicated by the Bid Item and Specification Reference shown on the RAM. The RAM should be coded with the 4 digit QPL code and any notes and/or restrictions restated as "Remarks" on the RAM.

When unable to approve a RAM as outlined above, the Engineer will code the items with a "7" and forward it to the State Materials Laboratory Documentation Section. A copy should also be returned to the Contractor at this point to inform him that the RAM has been sent to the State Materials Laboratory for approval. Attach any additional documentation, along with appropriate transmittals, that

may assist the RAM Engineer in approving the proposed material; such as Catalog Cuts, Manufacturer's Certificate of Compliance, etc. Including the page number of the Special Provision or Plan Sheet will also aid in expediting the Approval process.

All RAMs shall be signed and dated by the Engineer. Copies shall be distributed as indicated at the bottom of the form. Acceptance requirements should be noted on the maintained ROM or Materials Tracking Program. When additional material documentation such as Manufacturer's Certificate of Compliance or Catalog Cuts are available, copies may be made to assist the Inspector in the acceptance/verification process.

All RAMs shall be signed and dated by the Engineer. Copies shall be distributed as indicated at the bottom of the form. Acceptance requirements should be noted on the maintained ROM or Materials Tracking system. When noted on the State approved RAM, copies of requested material documentation (i.e., Manufacturer's Certificate of Compliance, Mill Test Reports, Catalog Cuts, etc.) should be sent to the State Materials Laboratory, QPL Engineer, for possible inclusion on the QPL.

Low Risk Materails

There are low risk, low cost materials that may be used in the project with neither contractor identification per Section 1-06 of the Standard Specifications nor any other documentation. These materials include:

Nails
Pea gravel for decorative purposes
PVC glue
Polypropylene rope for induction loop
Centralizers and spacers for rebar columns
Friction tape
Moisture proof varnish for friction tape
Duct tape for bridge approach slab anchors
Grout for cosmetic purposes
Electrical tape
Straw bales not used as mulch

Other items can be considered for addition to this list. We encourage anyone with suggestions to contact the Construction Office or the State Materials Laboratory.

9-1.5C Vacant

9-1.5D Materials Fabrication Inspection Office — Inspected Items Acceptance

Items that are inspected and found to meet contract documents by the Materials Fabrication Inspection Office are identified by a tag or stamp. This type of inspection is generally performed at the manufacturing or fabrication plants. There are various types of stamps or tags used for acceptance of inspected items, which attest that the item was in full conformance with the specifications at the time of inspection. The inspected items along with the type of stamp designation is covered under Section 9-1.5D(1) of this manual.

The following is the process for the acceptance of inspected items.

1. The manufacturing or fabrication plant must be approved via the "Request for Approval of Material," (RAM) or the Qualified Products List (QPL)

2. The Materials Fabrication Inspection Office Inspector, who will obtain the necessary mill tests or other documentation from the manufacturer and reference them to the stamp or tag shown in Figures 9-3 through 9-7, must inspect the item of work. This number can be used for tracking of the item.

3. Once the fabricated item arrives on the job, check for approval stamp or tag.

   a. If there is an approval stamp or tag, record the type of tag or stamp along with the ID number when applicable, quantity, and brief description of the item for project records. The Project Engineer's representative should note in a report that the material was in satisfactory visual condition when installed and forward all information to the project office. In case of questions concerning an inspected item, contact the appropriate Materials Fabrication Inspection Office. The offices are:

      State Materials Laboratory, Tumwater, Mail Stop 47365

      Seattle Inspection Office, Mail Stop NB-82, Northwest, MS-501

      Spokane Inspection Office, Mail Stop Eastern, Materials Lab

      Vancouver Inspection Office, Mail Stop Southwest S-15, Materials Lab

   b. If there are no stamps or tags, inform the Contractor that the item may not be acceptable, and contact the Materials Fabrication Inspection Office to determine the status of the inspection. Items lacking tags or stamps or damaged during shipping should be rejected and tagged or marked appropriately.

9-1.5D(1) Inspected Items, Stamps and Tagging Identification

The following are examples of the types of stamps and tags used by the Materials Fabrication Inspection Office. The letter on the stamp or tag represents the inspector who performed the inspection.

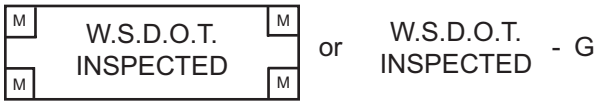

Stamps
Figure 9-3

The stamps shown in Figure 9-3 identifies inspection and the inspector of the following items:

1. Precast Concrete Barrier

2. Precast Concrete Catch Basins, Manholes and Inlets. This includes all sections and risers 6 inch and above.

3. Concrete Utility Vaults

4. Concrete Junction Boxes

5. Galvanized Steel

All Documentation associated with these stamps in Figure 9-3 will be reviewed and approved by the Materials Fabrication Inspection Office and kept at the point of Manufacture, with the exception that they will not track the quantities of foreign materials used on the project.

APPROVED
FOR SHIPMENT
WASH. DEPT. TRANSP.

N001234

Stamp
Figure 9-4

Tag
Figure 9-5

The stamp shown in Figure 9-4 or tag shown in Figure 9-5 identifies inspection and the inspector of the following items:

1. Concrete Wall Panels — Stamped or tagged

2. Three Sided Structures — Stamped or tagged

3. Prestressed Concrete Products — Stamped or tagged

4. Steel for Bridges — Stamped or tagged

5. Signal, Luminaire and Strain Poles — Stamped or tagged

6. Miscellaneous Welded Shop Items (see RAM or QPL for special items) — Stamped or tagged

7. Sign Structures and associated hardware — Stamped or tagged

8. Anchor Bolts for Luminaires, Signal Poles and Sign Structures – Stamped or tagged

9. Epoxy Coated Reinforcing Steel Bars for Concrete — Bundles of rebar shall be randomly tagged per shipment to the project

10. Metal Bridge Rail — Each bundle of rail shall be tagged

11. Raised Pavement Markers, Type 1 (thermo-resin type only) – Each box of markers shall be stamped.

12. Concrete Culvert, Sewer Pipe (30 inches (750 mm) and above) — Stamped

13. Sign Mounting Hardware – stamp

All Documentation associated with the stamp in Figure 9-4 or the tag in Figure 9-5 will be reviewed and approved by the Materials Fabrication Inspection Office and kept at the Materials Fabrication Inspection Office, with the exception that they will not track the quantities of foreign materials used on the project.

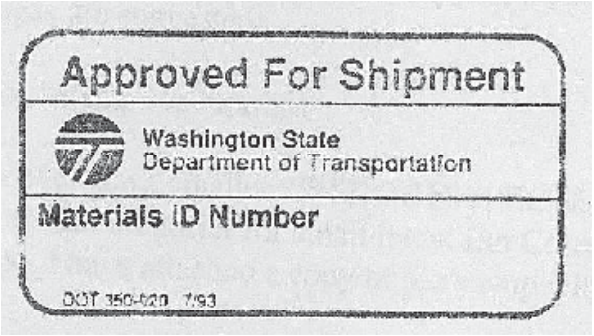

Tag
Figure 9-6

The tag in Figure 9-6 identifies inspection and inspector of Treated Timber, Piling and Poles

1. Bundles of treated timber may be randomly tagged " Approved for Shipment" referencing the inspector's identification number.

2. Treated Piling and Poles shall be individually tagged "Approved for Shipment" referencing the inspector's identification number.

All Documentation associated with the tag in Figure 9-6 will be reviewed and approved by the Materials Fabrication Inspection Office and kept at the Materials Fabrication Inspection Office.

WSDOT-A

Stamp
Figure 9-7

The stamp shown in Figure 9-7 identifies inspection and inspector of the following items:

(This stamp is impressed on the casting and will be circled with spray paint for ease of visibility of the stamp.)

1. Gray-Iron Castings, Steel Castings, Ductile-Iron Castings — Stamped

2. Standard Plan B-2a and B-2b Frames and Grates — Each set shall be stamped aligning the adjacent mating surfaces to each other. This alignment is critical as the leveling pads are ground to prevent rocking of the grates in the frames.

All Documentation associated with the stamp in Figure 9-7 will be reviewed and approved by the Materials Fabrication Inspection Office and kept at the Materials Fabrication Inspection Office, with the exception that they will not track the quantities of foreign materials used on the project.

9-1.5E Manufacturer's Certificate of Compliance

As designated by the specifications and contract special provisions, certain materials may be accepted on the basis of a Manufacturer's Certificate of Compliance. This acceptance is an alternate to job site sampling and testing. The Record of Material should indicate the required sampling and testing and provide a guide to the items for which a compliance certification is an acceptable basis of acceptance. The Manufacturer's Certificate of Compliance is required prior to installation of the material. See Section 1-2.8C(3) of this manual for guidance on allowing material to be placed without certification.

Acceptance by Manufacturer's Certificate of Compliance will be permitted where designated by the contract documents. The Record of Material will provide a summary of requirements combining the special as well as general requirements of the contract.

The form of the Manufacturer's Certificate of Compliance will vary considerably based on both the material and the origin and may take the form of standard state certificate forms, individual letters from manufacturers, or overstamps on bills of lading. Certain information is required and is designated by the specifications. This information includes the identity of the manufacturer, the type and quantity of material being certified, the applicable specifications being affirmed, and the signature of a responsible representative of the manufacturer. Supporting mill tests or documents may also be required. A Manufacturer's Certificate of Compliance is required for each delivery of material to the project and the lot number of material being certified shall be identified.

Upon receipt of the Manufacturer's Certificate of Compliance at the project office, it shall be reviewed for compliance with the specifications requirements using the preceding guidelines and the checklist for Transmittal of Manufacturer's Certificate of Compliance Form 350-572. The manufacturer of the material must make the certification. A supplier certificate is not acceptable except as evidence for lot number and quantity shipped and can only be accepted when accompanied by a certificate from the manufacturer, which meets the requirements of Section 1-06.3 of the *Standard Specifications*.

9-1.5F Concrete Pipe Acceptance Report

Fabrication inspection is periodically performed at approved sources of concrete pipe. During this inspection, samples of each type, size, and class of pipe are inspected and tested to verify compliance with the *Standard Specifications*. For a 90-day period of manufacture from the date of inspection, concrete pipe less than 30 inches (750 mm) diameter may be shipped and accepted based on "Concrete Pipe Acceptance Reports." This report is prepared by the Fabrication Inspector and copies are thereafter supplied by the fabricator to accompany each shipment of pipe.

The Acceptance Report will indicate the date and original test results as performed by the Fabrication Inspector and will bear appropriate certification from the fabricator. Verify the conformance of the shipment with the contract requirements and examine the manufacture and shipping dates of the pipe for conformance with specifications and with the Acceptance Report.

9-1.5G Fabrication Inspection Documentation Requirements

The Sign Fabricator Inspector is to verify that signs for an individual contract were inspected and approved for shipment to the project by having a **"FABRICATION APPROVE**D" decal, see Figure 9-8.

Figure 9-8

Pre-approval of the Sign Fabricator is required by Traffic Operations and /or the Materials Fabrication Office. The Sign Fabricator is approved via the Request for Approval of Material (DOT Form 350-071).

Sign Fabrication Inspectors

Seattle, Yakima, Tacoma, and other Western Washington area — Contact the State Materials Lab- Seattle Inspection Office, Mail Stop NB82-501, (206) 464-7770.

Vancouver-Portland area — Contact Vancouver Inspection Office, Mail Stop S15, (360) 905-2193.

Spokane-Eastern Washington area — Contact the Eastern Region Materials Lab, Spokane, (509) 324-6169

Sign Inspection documentation requirements:

1. Sign blanks or panels: Manufacturer's Certificate of Compliance with accompanying mill certifications will be kept at the Sign Fabrication facility.

2. Reflective Sheeting and Cutout Legend: Manufacturer's Certificate of Compliance, this certificate will verify that the product(s) meets all the requirements of Standard Specification 9-28.12. The Manufacturer's Certificate of Compliance will be kept at the Sign Fabrication facility.

3. Sign mounting hardware: Manufacturer's Certificate of Compliance, this certificate will verify that the product(s) meet all the requirements of Standard Specification 9-28.11. Supporting material certification documents are not required. The Manufacturer's Certificate of Compliance will be kept at the Sign Fabrication facility.

4. The Project Engineer Representative will accept for installation and payment only those signs which have a **"FABRICATION APPROVE**D" decal affixed. The representative will also verify the sign mounting hardware package bears a "WSDOT INSPECTED" stamp. In the event there is no **"FABRICATION APPROVED"** decal on the signs or "WSDOT INSPECTED" stamp on the associated hardware, they may be rejected. Contact the appropriate Sign Fabricator Inspector for status, or have the Contractor ship the signs back to Sign Fabricator, if this does not delay the project.

Double-faced signs, which do not receive decals, will be approved on visual inspection at the fabricator's facility and in the field.

A list/invoice of all inspected and accepted signs will kept in the Sign Fabricator Inspector's files.

9-1.6 Control of Materials

The succeeding parts of this chapter on materials outline the detailed method to be used in the control of materials. The expenditure made for materials is a large item in construction costs. If faulty materials are permitted to be incorporated into the project, the cost of replacement may exceed the original cost.

Chapter 9-4, Specific Requirements for each type of material, includes the following information:

1. Approval of Material
2. Preliminary Samples
3. Acceptance Samples
4. Field Inspection
5. Specification Requirements

Chapter 9-5, Guidelines for Job Site Control of Materials, provides the Engineer with additional information to assist in determination of the point of acceptance for materials from WSDOT and Contractor sources, the basis of acceptance, verification sampling and testing, tolerance limits, and the sampling and testing frequency guide.

Chapter 9-6, Radioactive Testing Devices, explains policy on the administration of radioactive testing devices.

Chapter 9-8, WSDOT Test Methods/Field Operating Procedures, are the testing procedures that are used in the field.

9-2 Vacant

9-3 Vacant

9-4 Specific Requirements for Each Material

Section Number	Specific Requirements for Each Material Alphabetical Listing	Page Number
9-4.58	Admixtures for Concrete	9-31
9-4.6	Aggregates for Asphalt Concrete and Asphalt Treated Base	9-14
9-4.25	Anchor Bolts	9-21
9-4.67	Anchor Bolts for Luminaires, Signal Poles, and Sign Structures	9-34
9-4.7	Asphalt Concrete and Asphalt Treated Base	9-15
9-4.51	Beam Guardrail, Guardrail Anchors and Glare Screen	9-29
9-4.2	Bituminous Materials	9-12
9-4.32	Bridge Approach Slab Anchors	9-23
9-4.76	Concrete	9-37
9-4.4	Concrete Aggregates	9-13
9-4.16	Concrete Culvert, Sewer, Drain, and Underdrain Pipe	9-18
9-4.57	Concrete Curing Compounds	9-31
9-4.64	Conduit	9-33
9-4.75	Construction Geotextiles	9-37
9-4.79	Controller Cabinet Assembly	9-38
9-4.30	Dowels and Tiebars for Concrete Pavement incl. Epoxy Coated	9-23
9-4.70	Elastomeric Bearing Pads	9-35
9-4.13	Elastomeric Compression Seals	9-16
9-4.65	Electrical Conductors	9-33
9-4.27	Epoxy Coated Reinforcing Steel Bars for Concrete	9-22
9-4.60	Epoxy Resins	9-32
9-4.78	Expansion Joints	9-38
9-4.71	Fabric Pad Bearings	9-36
9-4.50	Fencing	9-28
9-4.47	Fertilizer	9-27
9-4.62	Gabion Baskets	9-33
9-4.17	Galvanized Steel, Aluminized Steel and Aluminum Corrugated Metal Culvert, Drain Pipe and Perforated Underdrain Pipe	9-18
9-4.9	Gravel Base and Bank Run Gravel for Trench Backfill	9-15
9-4.20	Gray-Iron Castings, Steel Castings, Ductile-Iron Castings (Catch Basin Frames and Grates, Manhole Rings and Covers, Monument Case and Cover, etc)	9-19
9-4.52	Guardrail Posts and Blocks	9-29

9-4.24	High Strength Bolts, Nuts and Washers	9-21
9-4.40	Hollow Steel Piling and Jack Casing	9-25
9-4.3	Hot Melt Traffic Button Adhesive	9-13
9-4.15	Hot Poured Joint Sealant	9-17
9-4.49	Irrigation System	9-28
9-4.68	Luminaries and Lamps	9-35
9-4.28	Mechanical Splices	9-22
9-4.74	Metal Bridge Rail	9-36
9-4.8	Mineral Filler	9-15
9-4.53	Miscellaneous Precast Concrete Products (Block Traffic Curb, Precast Traffic Curb)	9-30
9-4.48	Mulch	9-28
9-4.35	Paints for Structures	9-24
9-4.18	Perforated Underdrain Pipe	9-19
9-4.38	Piling — Untreated	9-25
9-4.10	Pit Run Aggregates (Gravel Backfill for Foundation CL. B, Walls, Pipe Zone Bedding, Drains and Drywells; Backfill for Sand Drains, Sand Drainage Blanket, Bedding Material for Rigid Pipe, Thermoplastic Pipe; Foundation Material Class A, B, and C, Gravel Borrow, Common Borrow, Select Borrow)	9-16
9-4.44	Plant Material	9-26
9-4.59	Plastic Waterstop	9-32
9-4.1	Portland Cement or Blended Hydraulic Cement	9-12
9-4.72	Precast Concrete Barrier and Wall Panels	9-36
9-4.41	Precast Concrete Catch Basins, Manholes and Inlets	9-26
9-4.12	Premolded Joint Filler	9-16
9-4.54	Prestressed Concrete Products	9-30
9-4.34	Prestressing/Post Tensioning Reinforcement — Bar	9-24
9-4.33	Prestressing/Post Tensioning Reinforcement — Strand	9-23
9-4.55	Raised Pavement Markers, Types 1, 2 and 3	9-30
9-4.29	Rebar Chairs, Dobies and Spacers	9-22
9-4.26	Reinforcing Bars for Concrete	9-21
9-4.61	Resin Bonded Anchors	9-32
9-4.42	Riprap, Quarry Spalls, Slope Protection, and Rock Wall	9-26
9-4.73	Safety Bars, Cattle Guards. Sign Mounting Brackets, Steel and Special Guardrail Posts, Steel Sign Posts	9-36
9-4.21	Sanitary Sewers	9-20
9-4.46	Seed	9-27
9-4.43	Semi-Open Slope Protection	9-26
9-4.63	Sign Structures	9-33
9-4.66	Signal, Luminaire and Strain Poles	9-34
9-4.56	Signing Materials	9-31
9-4.22	Steel for Bridges	9-20
9-4.39	Steel H-Piling	9-25
9-4.19	Structural Plate Pipes and Arches	9-19
9-4.36	Structural Timber and Lumber — Untreated	9-24
9-4.5	Surfacing Aggregates (Crushed Screening, Crushed Cover Stone, Ballast, Shoulder Ballast, Crushed Surfacing Base and Top Course)	9-14
9-4.80	Temporary Erosion and Sediment Control Items	9-39
9-4.45	Topsoil Type A	9-27
9-4.37	Treated Timber and Piling	9-25
9-4.14	Two Component Poured Rubber Joint Sealer	9-17
9-4.23	Unfinished Bolts (Ordinary Machine Bolts), Nuts and Washers	9-20
9-4.11	Vacant	9-16
9-4.69	Water Distribution System	9-35
9-4.77	Water for Concrete	9-38
9-4.31	Wire Reinforcement for Concrete	9-23

9-4.1 Portland Cement or Blended Hydraulic Cement

1. Approval of Material: Approval of materials is required prior to use. This approval may either be by virtue of the inclusion of this material/product on the Qualified Products List or by approval of a Request for Approval of Material (DOT Form 350-071). If approval is by means of QPL, be certain to verify that product is in fact qualified for its intended use, product is listed under appropriate specification.

2. Preliminary Samples: Preliminary samples will be required only if requested on Request for Approval of Material (DOT Form 350-071).

3. Acceptance/Verification

   a. Acceptance

      (1) Bulk Cement: Bulk cement will be accepted upon receipt of a Manufacturer's Mill Test Report Number, which shall be reported on each certified concrete delivery ticket.

      (2) Bagged Cement: If the quantity of bagged cement exceeds 400 bags, then it will be accepted by "SATISFACTORY" test reports from the State Materials Laboratory. If a sample is needed, acquire a 10-pound (5-kilogram) sample from one of every 400 bags and ship to the State Materials Laboratory for testing. Allow a minimum of 14 days from receipt of the sample at the Laboratory for testing. DO NOT permit the use of bagged cement until a "SATISFACTORY" test report has been received from the State Materials Laboratory.

   b. Verification: Manufacturing mills will provide samples directly to the State Materials Laboratory on a quarterly basis to compare with the manufacturing mill test report. The Engineer may take samples for testing as described in *Standard Specifications* Section 9-01.3.

4. Verify the materials received on the job site, is in fact the same make, model, lot, batch, size, color, blend, etc., as approved for use, be it by QPL or via the Request for Approval of Material (DOT Form 350-071).

5. Specification Requirements: See *Standard Specifications* Section 9-01. Review contract documents to determine if supplemental specifications apply.

9-4.2 Bituminous Materials

1. Approval of Material: Approval of the materials are required prior to use. This approval may either be by virtue of the inclusion of this material/product on the Qualified Products List or by approval of a Request for Approval of Material (DOT Form 350-071). If approval is by means of QPL, be certain to verify that product is in fact qualified for its intended use, product is listed under appropriate specification.

2. Preliminary Samples: A preliminary sample of the material will be required only if requested on Request for Approval of Material (DOT Form 350-071). A preliminary sample consists of two (2) one-liter (1-quart) cans.

3. Acceptance/Verification

   a. Acceptance: Bituminous materials may be used after receipt by the Engineer of Asphalt Supplier's Certification of Compliance incorporated in their Bill of Lading with the information required by the *Standard Specifications 9-02*. Examine these certificates to make sure the material is of the grade required and that it comes from the approved supplier and point of shipment.

   b. Verification: Samples for verification conformance will be taken based on the frequencies as stated in Section 9.5-7 of this manual. Because the entire sample may be used in testing, it is necessary to take a backup for each sample. The samples shall be taken and labeled in duplicate by the Engineer with both samples fowarded promptly to the State Materials Laboratory. Paving asphalt's (PG, AR, PBA, AC, and RA grades) shall be taken at a frequency corresponding to every other ACP mix acceptance sample. The first, third, fifth, and every fifth sample thereafter will be tested. Emulsions and cutbacks (such as MC and RC grades), shall be sampled from every other shipment. Emulsion used exclusively for tack coat (such as STE-1 and CSS-1), do not require sampling.

Consult the FOP for AASHTO T40 for detailed sampling procedures. Samples shall be taken as close as possible to the point where the material is to be used; i.e., pug mill, distributor, etc. In the case of cutback asphalt's, sampling may be from the distributor itself, by opening a valve or one of the nozzles. If a hand nozzle is available, the sample may be drawn off there. Paving asphalt for use in a plant should be sampled by drawing from either the supply line between the storage tank and the mixer or the storage tank. Specifications require the Contractor to install a valve for this purpose.

If samples cannot be taken from the distributor, as outlined above, they may be taken from the storage tank. Samples taken directly from storage tanks must be taken with a "thief," so that they do not include surface material and are from near the middle of the asphalt in storage. They may be taken by the grab method — that is, the full amount of the sample will be taken at one time or at one spot in the car.

Samples of emulsified asphalt shall be taken as close as possible to the location the materials are used, but they must be taken before any dilution of the material takes place.

The containers for all liquid asphalt products except emulsions will be approximately 1 quart (1 liter) cans with $1^3/_4$-inch (44-mm) screw caps. Containers for emulsions shall be 1 quart (1 liter) plastic. Always use new, clean containers that are free of rust, dents, or other weaknesses that may cause leaking or contamination. Containers previously used for any other purpose will not be satisfactory regardless of how well cleaned they are considered to be. The outside of the containers must not be cleaned by immersion in kerosene or other solvent because of the danger of contaminating the sample. Containers must not be cooled by immersion in water or other liquid as contraction may draw contaminants into sample. Enter complete data on gummed label DOT Form 350-016 and attach to each of the two cans. Complete a Sample Transmittal (DOT Form 350-056) and attach it, in its envelope, to the container. If tape is used to attach envelope to container, or the containers together, be sure the tape is not contacting the label(s).

4. Field Inspection: Check the "Bill of Lading" that the liquid asphalt delivered complies with the requirements of the approved mix design. Check temperature to which material is heated to make sure specified limits are not exceeded, see *Standard Specification 9-02.3*.

5. Specification Requirements: See *Standard Specifications* Section 9-02. Review contract documents to determine if supplemental specifications apply. In addition, refer to project mix design.

9-4.3 Hot Melt Traffic Button Adhesive

1. Approval of Material: Approval of materials is required prior to use. This approval may either be by virtue of the inclusion of this material/product on the Qualified Products List or by approval of a Request for Approval of Material (DOT Form 350-071). If approval is by means of QPL, be certain to verify that product is in fact qualified for its intended use, product is listed under appropriate specification.

2. Preliminary Samples: A preliminary sample of the material will be required only if requested on Request for Approval of Material (DOT Form 350-071). Submit Manufacturers Certificate of Compliance meeting the requirements of *Standard Specifications* Section 1-06.3, including supporting tests reports to State Materials Laboratory for evaluation.

3. Acceptance/Verification

   a. Acceptance: Verify the materials received on the job site, is in fact the same make, model, lot, batch, size, color, blend, etc. as approved for use, be it by QPL or via the Request for Approval of Material (DOT Form 350-071).

b. Verification: Submit a sample of each lot of material to the State Materials Laboratory for testing.

4. Field Inspection: Verify correct heating of product per manufacturers recommendations.

5. Specification Requirements: See *Standard Specifications* Section 9-02.1(8). Review contract documents to determine if supplemental specifications apply.

9-4.4 Concrete Aggregates

1. Approval of Material: Consult the Aggregate Sources Approval (ASA) database for approval of material for each source prior to use.

2. Preliminary Samples: A preliminary sample of the material will be required only if requested on the Request for Approval of Material (DOT Form 350-071) or if the ASA database indicated that the aggregate source has expired. Contact the Regional Materials Office if preliminary samples are required. Preliminary samples for Concrete Aggregate shall be made up of 50-100 pounds (25-50 kilograms) of clean, washed coarse aggregate and 20-25 pounds (10-13 kilograms) of clean washed fine aggregate. The sample is to be shipped in increments, using satisfactory containers, not exceeding 30 pounds (15 kilograms).

3. Acceptance: After the source has been approved, concrete aggregates may be accepted upon satisfactory field tests for grading, cleanliness and free from excessive organic matter, silt, and soft or foreign pieces. Acceptance samples shall be obtained, tested, and recorded in accordance with the *Standard Specifications* Section 9-03.1, the contract special provisions, and Chapters 9-5.7, and 10-3.14A of this manual.

4. Field Inspection: See Chapters 9-8 for Sampling Methods and Testing Procedures. Discuss test results with the Contractor's representative. Enforce provisions of the *Standard Specifications* regarding stockpiling.

5. Specification Requirements: See *Standard Specifications* Section 3-02 and 9-03.1. Review contract documents to determine if supplemental specifications apply.

9-4.5 Surfacing Aggregates (Crushed Screening, Crushed Cover Stone, Ballast, Shoulder Ballast, Crushed Surfacing Base and Top Course)

1. Approval of Material: Consult the Aggregate Sources Approval (ASA) database for approval of material for each source prior to use.

2. Preliminary Samples: A preliminary sample of the material will be required only if requested on the Request for Approval of Material (DOT Form 350-071) or if the ASA database indicated that the aggregate source has expired. Contact the Regional Materials Office if preliminary samples are required. Preliminary samples for Surfacing Aggregate made up of 80-120 pounds (35-55 kilograms) are required to perform the qualifying tests. The sample is to be shipped in increments, using satisfactory containers, not exceeding 30 pounds (15 kilograms).

3. Acceptance: After the source has been approved, surfacing aggregates may be accepted upon satisfactory field tests. Acceptance samples shall be obtained, tested, and recorded in accordance with the contract special provisions, and Chapters 9-5.7, 9-8, and 10-3.14A of this manual.

4. Field Inspection: See Chapters 9-8 for Sampling Methods and Testing Procedures. Discuss test results with the Contractor's representative. Enforce provisions of the *Standard Specifications* regarding stockpiling.

5. Specification Requirements: See *Standard Specifications* Sections 3-02, 9-03.4, and 9-03.9. Review contract documents to determine if supplemental specifications apply.

9-4.6 Aggregates for Asphalt Concrete and Asphalt Treated Base

1. Approval of Material: Consult the Aggregate Sources Approval (ASA) database for approval of material for each source prior to use.

2. Preliminary Samples

a. Preliminary Samples: A preliminary sample of the material will be required only if requested on the Request for Approval of Material (DOT Form 350-071) or if the ASA database indicated that the aggregate source has expired. Contact the Regional Materials Office if preliminary samples are required. Preliminary samples for the aggregate shall be made up of 80-120 pounds (35-55 kilograms) as required to perform the quality tests. The sample is to be shipped in increments, using satisfactory containers, not exceeding 30 pounds (15 kilograms).

b. Preliminary Mix Design Samples: These samples are used to determine if the aggregate source is capable of meeting the mix design specification requirements. Preliminary samples shall be made up of 200 pounds (100 kilograms) of rock or pit run gravel and 25 pounds (10 kilograms) of blend sand if utilized. Contact the Regional Materials Office if preliminary samples are required. Give full details of type of construction proposed. The sample is to be shipped in increments, using satisfactory containers, not exceeding 30 pounds (15 kilograms).

3. Acceptance: After the source has been approved, the aggregates may be accepted upon satisfactory field tests. Acceptance samples shall be obtained, tested, and recorded in accordance with the *Standard Specifications*, the contract special provisions, and Chapters 9-5.7, 9-8 and 10-3.14A of this manual. Aggregates produced for use on the current contract shall be sampled and tested for fracture and sand equivalent as the material is placed into stockpile. When material is used from a stockpile that has not been tested as provided above, the requirements for fracture and sand equivalent shall apply at the time of its introduction to the cold feed of the mixing plant. Acceptance of the aggregate for gradation shall be based on samples taken from the Hot Mix Asphalt.

If the aggregates are being produced for use on a future contract, they shall be sampled and tested for gradation as well as fracture and sand equivalent at the time the material is placed in stockpile.

4. Field Inspection: See Chapters 9-8 for Sampling Methods and Testing Procedures. Discuss test results with the Contractor's representative. Enforce provisions of the *Standard Specifications* regarding stockpiling.

5. Specification Requirements: See *Standard Specifications* Sections 3-02, 9-03.6 and 9-03.8. Review contract documents to determine if supplemental specifications apply.

9-4.7 Asphalt Concrete and Asphalt Treated Base

1. Approval of Material: Approval of the materials for asphalt concrete and asphalt treated base are required prior to use.

A current approved mix design is required for each contract. An approved mix design is only valid for a single construction season.

a. Job Mix Design: Send 200 pounds (100 kilograms) of aggregate from each coarse stockpile (No. 4 (4.75 mm) and larger), 100 pounds (50 kilograms) of aggregate from each fine stockpile (smaller than No. 4 (4.75 mm)), and 50 pounds (25 kilograms) of blend sand if utilized to the State Materials Laboratory for testing. The sample is to be shipped in increments, using satisfactory containers, not exceeding 30 pounds (15 kilograms).

The aggregate samples must be accompanied by completed sample transmittals from the Project Engineer and the contractor's proposal containing the following data: individual stockpile average gradations, proposed combining ratios of aggregate stockpiles, which when calculated will reflect the proposed gradation of the completed mix. Also include the asphalt supplier(s) and grade of the asphalt cement.

b. Reference Mix Design: A reference mix design can be used if there is a current valid mix design previously developed using the same materials and JMF as the one proposed. Contact the State Materials Laboratory, Bituminous Section for availability.

2. Preliminary Samples: Not required.

3. Acceptance: After the sources have been approved, the aggregates may be accepted upon satisfactory field tests, for gradation and asphalt content. Acceptance samples shall be obtained, tested, and recorded in accordance with the *Standard Specifications*, the contract special provisions, and Chapters 9-5.7, 9-8 and 10-3.14A of this manual. The sampling will be on a random basis using the procedures shown in WSDOT Test Method 716. The sampling and testing frequency for each lot is indicated in Chapter 9-5.7.

4. Field Inspection: The Engineer should perform a plant inspection prior to production. Contact the Regional Materials Office for assistance with this inspection. See Chapters 9-8 for Sampling Methods and Testing Procedures. Discuss test results with the Contractor's representative.

5. Specification Requirements: See *Standard Specifications* Sections 5-04, 9-03.6, and 9-03.8. Review contract documents to determine if supplemental specifications apply.

9-4.8 Mineral Filler

1. Approval of Material: Approval of the materials is required prior to use. This approval may either be by virtue of the inclusion of this material/product on the Qualified Products List or by approval of a Request for Approval of Material (DOT Form 350-071). If approval is by means of QPL, be certain to verify that product is in fact qualified for its intended use, product is listed under appropriate specification.

2. Preliminary Sample: A preliminary sample of the material will be required only if requested on Request for Approval of Material (DOT Form 350-071). Ship 3 pounds (1.5 kilograms) in polyethylene bag.

3. Acceptance: Acceptance of mineral filler (commercial stone dust) shall be based on "SATISFACTORY" laboratory tests only for each lot of 50 tons (tonnes) or less. Portland cement may be accepted without test if it is furnished in original factory sacks and is not lumpy.

4. Field Inspection: Verify the materials received on the job site, is in fact the same make, model, lot, batch, size, color, blend, etc. as approved for use, be it by QPL or via the Request for Approval of Material (DOT Form 350-071). See that the mineral filler does not contain foreign material or lumps.

5. Specification Requirements: See *Standard Specifications* Section 9-03.8(5). Review contract documents to determine if supplemental specifications apply.

9-4.9 Gravel Base and Bank Run Gravel for Trench Backfill

1. Approval of Material: Consult the Aggregate Sources Approval (ASA) database for approval of material for each source prior to use.

2. Preliminary Samples: A preliminary sample of the material will be required only if requested on the Request for Approval of Material (DOT Form 350-071) or if the ASA database indicated that the aggregate source has expired. Contact the Regional Materials Office if preliminary samples are required. Preliminary samples for the aggregate shall be made up of 50-100 pounds (25-50 kilograms) are required to perform the quality tests. The sample is to be shipped in increments, using satisfactory containers, not exceeding 30 pounds (15 kilograms).

3. Acceptance: After the source has been approved, the aggregates may be accepted upon satisfactory field tests. Acceptance samples shall be obtained, tested, and recorded in accordance with the *Standard Specifications*, the contract special provisions, and Chapters 9-5.7, 9-8 and 10-3.14A of this manual.

4. Field Inspection: See Chapters 9-8 for Sampling Methods and Testing Procedures. Discuss test results with the Contractor's representative. Enforce provisions of the *Standard Specifications* regarding stockpiling.

5. Specification Requirements: See *Standard Specifications* Section 3-02, 9-03. Review contract documents to determine if supplemental specifications apply.

9-4.10 Pit Run Aggregates (Gravel Backfill for Foundation CL. B, Walls, Pipe Zone Bedding, Drains and Drywells; Backfill for Sand Drains, Sand Drainage Blanket, Bedding Material for Rigid Pipe, Thermoplastic Pipe; Foundation Material Class A, B, and C, Gravel Borrow, Common Borrow, Select Borrow)

1. Approval of Material: Consult the Aggregate Sources Approval (ASA) database for approval of material for each source prior to use. For Borrow sources, approval of source can be performed in the field by conforming that the gradation and SE meets the requirements as defined in Section 9-03 of the *Stand Specifications*.

2. Preliminary Samples: A preliminary sample of the material will be required only if requested on the Request for Approval of Material (DOT Form 350-071) or if the ASA database indicated that the aggregate source has expired. Contact the Regional Materials Office if preliminary samples are required. Preliminary samples for the aggregate shall be made up of 80-120 pounds 0 (33-55 kilograms) are required to perform the quality tests. The sample is to be shipped in increments, using satisfactory containers, not exceeding 30 pounds (15 kilograms).

3. Acceptance: After the source has been approved, and prior to use, the gradation and SE tests shall be performed to determine if the material does in fact meet specifications for intended use. The aggregates may be accepted upon satisfactory field tests. Acceptance samples shall be obtained, tested, and recorded in accordance with the *Standard Specifications*, the contract special provisions, and Chapters 9-5.7, 9-8 and 10-3.14A of this manual.

4. Field Inspection: See Chapters 9-8 for Sampling Methods and Testing Procedures. Discuss test results with the Contractor's representative. Enforce provisions of the *Standard Specifications* regarding stockpiling.

5. Specification Requirements: See *Standard Specifications* Section 3-02, 9-03. Review contract documents to determine if supplemental specifications apply.

9-4.11 Vacant

9-4.12 Premolded Joint Filler

1. Approval of Material: Approval of materials is required prior to use. This approval may either be by virtue of the inclusion of this material/product on the Qualified Products List or by approval of a Request for Approval of Material (DOT Form 350-071). If approval is by means of QPL, be certain to verify that product is in fact qualified for its intended use, product is listed under appropriate specification.

2. Preliminary Samples: If a preliminary sample is required, it shall consist of a 1 square foot (300 mm^2) section from each lot of material used. Submit sample to the State Materials laboratory for testing. If the lot can be identified and proven to have prior satisfactory acceptance test results, it may be used without testing on current projects.

3. Acceptance: Materials shall be accepted on receipt of "SATISFACTORY" test reports from the State Materials Laboratory. If the lot can be identified and proven to have prior satisfactory acceptance test results, it may be used without testing on current projects.

4. Field Inspection: Check for accuracy in cutting, stapling, and care in handling. Verify the materials received on the job site, is in fact the same make, model, lot, batch, size, color, blend, etc. as approved for use, be it by QPL or via the Request for Approval of Material (DOT Form 350-071).

5. Specification Requirements: See *Standard Specifications* Section 9-04.1. Review contract documents to determine if supplemental specifications apply.

9-4.13 Elastomeric Compression Seals

1. Approval of Material: Approval of materials is required prior to use. This approval may either be by virtue of the inclusion of this material/product on the Qualified Products List or by approval of a Request for Approval of Material (DOT Form 350-071). If approval is by means of QPL, be certain to verify that product is in fact qualified for its intended use, product is listed under appropriate specification.

2. Preliminary Samples: If a preliminary sample is required, it shall consist of a 2 feet (0.6 meters) section from each lot of material used. Submit sample to the State Materials laboratory for testing. If the lot can be identified and proven to have prior satisfactory acceptance test results, it may be used without testing on current projects.

3. Acceptance: The material/product may be accepted on a "SATISFACTORY" test report from the State Materials Laboratory. If the lot can be identified and proven to have prior satisfactory acceptance test results, it may be used without testing on current projects.

4. Field Inspection: Verify the materials received on the job site, is in fact the same make, model, lot, batch, size, color, blend, etc. as approved for use, be it by QPL or via the Request for Approval of Material (DOT Form 350-071).

5. Specification Requirements: See *Standard Specifications* Section 9-04.1. Review contract documents to determine if supplemental specifications apply.

9-4.14 Two Component Poured Rubber Joint Sealer

1. Approval of Material: Approval of materials is required prior to use. This approval may either be by virtue of the inclusion of this material/product on the Qualified Products List or by approval of a Request for Approval of Material (DOT Form 350-071). If approval is by means of QPL, be certain to verify that product is in fact qualified for its intended use, product is listed under appropriate specification.

2. Preliminary Samples: If a preliminary sample is required, it shall consist of an unopened container of each component from each lot of material used unless specifically exempted by the State Materials Laboratory. Submit sample to the State Materials Laboratory for testing. If the lot can be identified and proven to have prior satisfactory acceptance test results, it may be used without testing on current projects.

3. Acceptance: Material shall be accepted on "Satisfactory" test report or lot approval by the State Materials Laboratory.

4. Field Inspection: Make certain that application is in accordance with requirements of *Standard Specifications* and manufacturer's written recommendations. In order to obtain satisfactory adhesion of the sealer, joints must be thoroughly cleaned before the sealer is applied. Verify the material received on the job site, is in fact the same make, model, lot, batch, size, color, blend, etc. as approved for use, be it by QPL or via the Request for Approval of Material (DOT Form 350-071).

5. Specification Requirements: See *Standard Specifications* Section 9-04.2(2). Review contract documents to determine if supplemental specifications apply.

9-4.15 Hot Poured Joint Sealant

1. Approval of Material: Approval of materials is required prior to use. This approval may either be by virtue of the inclusion of this material/product on the Qualified Products List or by approval of a Request for Approval of Material (DOT Form 350-071). If approval is by means of QPL, be certain to verify that product is in fact qualified for it's intended use, product is listed under appropriate specification, and a "SATISFACTORY" test report from the State Materials Laboratory prior to use.

2. Preliminary Samples: If a preliminary sample is required, submit one box sample to the State Materials Laboratory for testing.

3. Acceptance: The material/product shall be accepted on a "SATISFACTORY" test report from the State Materials Laboratory. If the lot can be identified and proven to have prior satisfactory acceptance test results, it may be used without testing on current projects.

4. Field Inspection: Ensure that application is in accordance with requirements of the *Standard Specifications* Section 5-04.3(5C), 5-05.3(8)B and the manufacturer's recommendation. Verify the materials received on the job site, is in fact the same make, model, lot, batch, size, color, blend, etc. as approved for use, be it by QPL or via the Request for Approval of Material (DOT Form 350-071).

5. Specification Requirements: See *Standard Specifications* Section 9-04.2(1). Review contract documents to determine if supplemental specifications apply.

9-4.16 Concrete Culvert, Sewer, Drain, and Underdrain Pipe

1. Approval of Material: Approval of manufacturer is required prior to use. This approval may either be by virtue of the inclusion of this material/product on the Qualified Products List or by approval of a Request for Approval of Material (DOT Form 350-071). Notify Materials Fabrication Inspection Office of need to approve fabricator and provide Inspection Services. If approval is by means of QPL, be certain to verify that product is in fact qualified for its intended use, product is listed under appropriate Specification.

2. Preliminary Samples: A preliminary sample of the material will be required only if requested on Request for Approval of Material (DOT Form 350-071).

3. Acceptance:

   a. Concrete pipe less than 30 inches (750 millimeters) in diameter will be accepted based on "Concrete Pipe Acceptance Reports" which shall accompany the pipe to the job. Individual pipes are not stamped.

   b. Concrete pipe 30 inches (750 millimeters) in diameter and larger are individually inspected at the plant prior to shipment. Accepted pipe will be stamped "APPROVED FOR SHIPMENT" with ID number (Figure 9-5) on each piece of pipe, numbers repeated per inspection visit, number will differ for different diameters.

4. Field Inspection:

   a. Concrete pipe less than 30 inches (750 millimeters) in diameter:

      (1) Verify that the "Concrete Pipe Acceptance Report" is current and covers the diameter quantity and class of pipe delivered.

      (2) Inspect the manufacture date marked in each pipe to verify that it was made within the period covered by the Inspection Report. Also verify that shipment was made after the required retention time. *Standard Specifications* require 28 days for pipe using Type II cement and seven days for pipe using Type III cement. If tested and accepted at an earlier age these requirements may be modified.

      (3) Verify that the pipe is free from damage from handling and shipping.

(4) Concrete sewer pipe requires testing after installation in conformance with the *Standard Specifications* Section 7-04.3.

(5) Complete the upper portion of the "Concrete Pipe Acceptance Report" and forward to the contract files.

b. Concrete pipe 30 inches (750 millimeters) in diameter and larger:

(1) Verify that each pipe in the shipment is stamped "APPROVED FOR SHIPMENT." Only properly stamped pipe may be accepted.

(2) Verify that pipe is free from damage from shipping and handling. Concrete sewer pipe requires testing after installation in conformance with the *Standard Specifications* Section 7-04.

5. Specification Requirements: See *Standard Specifications* Section 9-05. Review contract documents to determine if supplemental specifications apply.

9-4.17 Galvanized Steel, Pipe Arch, Aluminized Steel and Aluminum Corrugated Metal Culvert, Drain Pipe and Perforated Underdrain Pipe

1. Approval of Material: Approval of materials is required prior to use. This approval may either be by virtue of the inclusion of this material/product on the Qualified Products List or by approval of a Request for Approval of Material (DOT Form 350-071). If approval is by means of QPL, be certain to verify that product is in fact qualified for its intended use, product is listed under appropriate specification. Notify Materials Fabrication Inspection Office of the need to provide Inspection Services for a fabrication facility not listed on the QPL. Approval of the fabrication facility as well as the base metal must be obtained.

2. Preliminary Samples: A preliminary sample of the material will be required only if requested on Request for Approval of Material (DOT Form 350-071).

3. Acceptance:

a. QPL Acceptance: Untreated metal culvert and drainpipe may be accepted at the job site from pipe provided by a manufacturer listed in the QPL. If the pipe shipment does not identify the pipe manufacturer, shipping Bill of Lading should be requested prior to accepting or installing the pipe. Pipe delivered without the appropriate AASHTO specification for the steel sheet, gauge thickness, and heat number stamped on the pipe, shall not be installed. Record heat numbers for each pipe installation. Any pipe, which is damaged in any way from shipping or handling, should not be accepted.

b. Non-QPL Acceptance:

(1) The Materials Fabrication Inspection Office will inspect treated metal culvert pipe at the point of fabrication. A representative number of pipes in each shipment will display "WSDOT INSPECTED," stamp. See Figure 9-3. If none of the pipe bears the "WSDOT INSPECTED" stamp, contact the Fabrication Inspection Office to arrange for an on site inspection prior to installation.

(2) In addition to verifying material has in fact been approved for use, acceptance shall consist of obtaining a Manufacturer's Certificate of Compliance with supporting Mill Test Reports prior to use.

4. Field Inspection: Check each delivery for fabrication details and quality of workmanship. Check for shipping damage and ensure that the spelter coating is intact. Check treated pipe for damage to coating. Obtain documentation for all pipes not accepted under provisions established in the QPL. Contact the Materials Fabrication Inspection Office for assistance.

5. Specification Requirements: See *Standard Specifications* Section 9-05. Review contract documents to determine if supplemental specifications apply.

9-4.18 Perforated Underdrain Pipe

1. Approval of Material: Approval of materials is required prior to use. This approval may either be by virtue of the inclusion of this material/product on the Qualified Products List or by approval of a Request for Approval of Material (DOT Form 350-071). If approval is by means of QPL, be certain to verify that product is in fact qualified for its intended use, product is listed under appropriate specification.

2. Preliminary Samples: Not required unless requested on Request for Approval of Material (DOT Form 350-071).

3. Acceptance: Pipe may be accepted on Manufacturer's Certificate of Compliance and field inspection.

4. Field Inspection: Check for compliance with specifications, particularly the size and spacing of holes, and for shipment and handling damage.

5. Specification Requirements: See *Standard Specifications* Section 9-05.2. Review contract documents to determine if supplemental specifications apply.

9-4.19 Structural Plate Pipes and Arches

1. Approval of Material: Approval of materials is required prior to use. This approval may either be by virtue of the inclusion of this material/product on the Qualified Products List or by approval of a Request for Approval of Material (DOT Form 350-071). If approval is by means of QPL, be certain to verify that product is in fact qualified for its intended use, product is listed under appropriate specification.

2. Preliminary Samples: A preliminary sample of the material will be required only if requested on Request for Approval of Material (DOT Form 350-071).

3. Acceptance: Acceptance may be on the basis of Manufacturer's Certificate of Compliance, with accompanying mill test reports. The certification must accompany the shipment and must contain the information which is listed hereinafter:

a. Chemical analysis of the base metal of each heat number in the shipment

b. The mass of zinc coating for each heat number in the shipment

c. A statement that all materials conform to requirements of the specifications

d. The certification must be on company letterhead and signed by a responsible company official whose title shall be indicated. All suppliers of structural plate pipe and arches are to transmit four copies of the certification to the Project Engineer. At least one copy must accompany the shipment; the others may be forwarded through the Contractor. Two copies of the certification are to be retained in the Project Engineer's files.

4. Field Inspection: Verify the materials received on the job site, is in fact the same make, model, lot, batch, size, color, blend, etc. as approved for use, be it by QPL or via the Request for Approval of Material (DOT Form 350-071). Check for breaks in zinc or asphalt coating and for damage from shipment. Material in the shipment must be properly identified as to heat number.

5. Specification Requirements: See *Standard Specifications* Section 9-05.6. Review contract documents to determine if supplemental specifications apply.

9-4.20 Gray-Iron Castings, Steel Castings, Ductile-Iron Castings (Catch Basin Frames and Grates, Manhole Rings and Covers, Monument Case and Cover, etc.)

1. Approval of Material: Approval of fabricator is required prior to use. This approval may either be by virtue of the inclusion of this material/product on the Qualified Products List or by approval of a Request for Approval of Material (DOT Form 350-071). An inspection to qualify a manufacturer will be required only if requested on Request for Approval Material (DOT Form 350-071). The Materials Fabrication Inspection Office will perform an on-site inspection of the manufacturing facilities prior to approval. Notify the Materials Fabrication Inspection Office of need to provide Inspection Services.

2. Preliminary Samples: A preliminary sample of the material will be required only if requested on Request for Approval of Material (DOT Form 350-071).

3. Acceptance: Acceptance will be based on Inspected Items Stamp (Figure 9-7). All castings will be steel stamped by the Materials Fabrication Inspection Office Inspector.

For Standard Plan B-2a and B-2b the frame and grate will each be stamped. Align the two stamps adjacent to each other. This alignment is critical as the leveling pads are ground to prevent rocking of the grates in the frames.

4. Field Inspection: Verify the materials received on the job site, is in fact the same make, model, lot, batch, size, etc. as approved for use, be it by QPL or via the Request for Approval of Material (DOT Form 350-071). Check for defects listed in the *Standard Specifications*. Check for the Inspector's approved stamp (Figure 9-7) and document it.

5. Specification Requirements: See *Standard Specifications* Sections 9-05.15, and 9-22.1. Review contract documents to determine if supplemental specifications apply.

9-4.21 Sanitary Sewers

1. Approval of Material: Approval of materials is required prior to use. This approval may either be by virtue of the inclusion of this material/product on the Qualified Products List or by approval of a Request for Approval of Material (DOT Form 350-071). If approval is by means of QPL, be certain to verify that product is in fact qualified for its intended use, product is listed under appropriate specification. An inspection to qualify a manufacturer of concrete pipe will be required only if requested on Request for Approval Material (DOT Form 350-071). The Materials Fabrication Inspection Office will perform an on-site inspection of the manufacturing facilities prior to approval.

2. Preliminary Samples: A preliminary sample of the material will be required only if requested on Request for Approval of Material (DOT Form 350-071).

3. Acceptance:

a. QPL Acceptance:

If using the QPL, be sure to verify appropriate means of acceptance, see applicable Acceptance Code within the QPL.

b. Non-QPL Acceptance:

Material may be accepted in lieu of sampling upon receipt of an "Approved" document as shown below:

(1) Ductile Iron Sewer Pipe — Manufacturer's Certificate of Compliance

(2) Plain Concrete Storm Sewer Pipe — Concrete Pipe Acceptance Report *

(3) Reinforced Concrete Storm Sewer Pipe — Concrete Pipe Acceptance Report *

(4) Vitrified Clay Sewer Pipe — Manufacturer's Certificate of Compliance.

(5) PVC Sewer Pipe — Manufacturer's Certificate of Compliance.

(6) Ductile Iron Sewer Pipe — Manufacturer's Certificate of Compliance.

(7) ABS Composite Sewer Pipe — Manufacturer's Certificate of Compliance.

*For concrete pipe 30 inches (750 millimeters) in diameter and larger, accepted pipe will be stamped "APPROVED FOR SHIPMENT" with ID number (Figure 9-5) on each piece of pipe.

4. Field Inspection: Check material delivered to the project for damage, and conformance to the contract documents.

5. Specification Requirements: See *Standard Specifications* Section 7-17. Review contract documents to determine if supplemental specifications apply.

9-4.22 Steel for Bridges

1. Approval of Material: Approval of the fabricator as well as the manufacturer of the steel is required prior to use. Upon receipt of the "Request for Approval of Material," the Materials Fabrication Inspection Office will inspect the fabrication shop to ensure it meets all contract requirements. A copy of the Request for Approval of Material will be sent to the Materials Fabrication Inspection Office.

2. Preliminary Samples: A preliminary sample of the material will be required only if requested on Request for Approval of Material (DOT Form 350-071).

3. Acceptance: Materials and fabrication will be accepted on Approved for Shipment stamps or tags (Figure 9-4 or 9-5) except in the case of minor parts. As soon as the fabricator receives the materials, the Materials Fabrication Inspection Office Inspector will check the accompanying mill test certificates to ensure the materials meet contract requirements. The Materials Fabrication Inspection Office Inspector will also provide weekly written shop inspection reports to the Project Engineer while major steel structures are being fabricated.

4. Field Inspection: Check for "APPROVED FOR SHIPMENT" tags or stamps (Figure 9-4 or 9-5) and shipping and handling damage.

5. Specification Requirements: See *Standard Specifications* Sections 6-03 and 9-06. Review contract documents to determine if supplemental specifications apply.

9-4.23 Unfinished Bolts (Ordinary Machine Bolts), Nuts, and Washers

1. Approval of Material: Approval of materials is required prior to use. This approval may either be by virtue of the inclusion of this material/product on the Qualified Products List or by approval of a Request for Approval of Material (DOT Form 350-071). If approval is by means of QPL, be certain to verify that product is in fact qualified for its intended use, product is listed under appropriate specification.

2. Preliminary Samples: A preliminary sample of the material will be required only if requested on Request for Approval of Material (DOT Form 350-071).

3. Acceptance: Unfinished bolts, nuts, and washers may be accepted on receipt of Manufacturer's Certificate of Compliance. If using the QPL, be sure to verify appropriate means of acceptance, see applicable Acceptance Code within the QPL.

4. Field Inspection: Verify the materials received on the job site, is in fact the same make, model, lot, batch, size, color, blend, etc. as approved for use, be it by QPL or via the Request for Approval of Material (DOT Form 350-071). Check each lot of material delivered to the project for damage, and that accompanying Manufacturer's Certificate of Compliance is present.

5. Specification Requirements: See *Standard Specifications* Section 9-06.5(1). Review contract documents to determine if supplemental specifications apply.

9-4.24 High Strength Bolts, Nuts and Washers

1. Approval of Material: Approval of materials is required prior to use. This approval may either be by virtue of the inclusion of this material/product on the Qualified Products List or by approval of a Request for Approval of Material (DOT Form 350-071). If approval is by means of QPL, be certain to verify that product is in fact qualified for its intended use, product is listed under appropriate specification.

2. Preliminary Samples: A preliminary sample of the material will be required only if requested on Request for Approval of Material (DOT Form 350-071).

3. Acceptance: Materials may be accepted on receipt of "SATISFACTORY" test reports from the State Materials Laboratory. When the materials are received on the job site, sample each shipment of the bolts, nuts, and washers in accordance with the table in Section 9-06.5(3) of the *Standard Specifications*. A separate transmittal and materials certification shall accompany each sample of bolts, each sample of washers, and each sample of nuts.

4. Field Inspection: Verify the materials received on the job site, is in fact the same make, model, lot, batch, size, color, blend, etc. as approved for use, be it by QPL or via the Request for Approval of Material (DOT Form 350-071). Make certain that material being used is from a lot represented by "SATISFACTORY" test report.

5. Specification Requirements: See *Standard Specifications* Section 9-06.5(3). Review contract documents to determine if supplemental specifications apply.

9-4.25 Anchor Bolts

1. Approval of Material: Approval of materials is required prior to use. This approval may either be by virtue of the inclusion of this material/product on the Qualified Products List or by approval of a Request for Approval of Material (DOT Form 350-071). If approval is by means of QPL, be certain to verify that product is in fact qualified for its intended use, product is listed under appropriate specification. Notify the Materials Fabrication Inspection Office of need to provide Inspection Services.

2. Preliminary Samples: A preliminary sample of the material will be required only if requested on Request for Approval of Material (DOT Form 350-071).

3. Acceptance: Acceptance may be based on "APPROVED FOR SHIPMENT" tags and/or stamp (Figure 9-4 or 9-5).

4. Field Inspection: Check for "APPROVED FOR SHIPMENT" tags and/or stamp (Figure 9-4 or 9-5). Check for damage due to shipping and handling.

5. Specification Requirements: See *Standard Specifications* Section 9-06.5(4). Review contract documents to determine if supplemental specifications apply.

9-4.26 Reinforcing Bars for Concrete

1. Approval of Material: Approval of material is required prior to use. This approval may either be by virtue of the inclusion of this material/product on the Qualified Products List or by approval of a Request for Approval of Material (DOT Form 350-071).

2. Preliminary Samples: May be required if requested on Request for Approval of Material (DOT Form 350-071).

3. Acceptance: Acceptance will be by the Fabricators Certification of Compliance and Certified Mill Test Reports that will accompany each shipment.

Note: If Mill Test reports are not available, do not incorporate steel into the project and contact the State Materials Laboratory, General Materials Engineer for guidance.

Representative of the Materials Fabrication Inspection Office may take random samples at the point of fabrication.

4. Field Inspection: Check for Certification of Compliance and Certified Mill Test Reports for sizes and heats of rebar. Remove excess rust and mill scale before using. Check steel fabrication and bends for compliance with contract documents.

5. Specification Requirements: See *Standard Specifications* Section 9-07. Review contract documents to determine if supplemental specifications apply.

9-4.27 Epoxy Coated Reinforcing Steel Bars for Concrete

1. Approval of Material: Approval of materials is required for both materials and coating applicator prior to use. This approval may either be by virtue of the inclusion of this material/product on the Qualified Products List or by approval of a Request for Approval of Material (DOT Form 350-0712). If approval is by means of QPL, be certain to verify that product is in fact qualified for its intended use, product is listed under appropriate specification.

2. Preliminary Samples: A preliminary sample of the material will be required only if requested on Request for Approval of Material (DOT Form 350-071). Notify Materials Fabrication Inspection Office of need to provide Inspection Services.

3. Acceptance: Material may be accepted on "APPROVED FOR SHIPMENT" stamp or tag (Figure 9-4 or 9-5).

Note: If bar is not tagged "APPROVED FOR SHIPMENT" do not incorporate steel into the project and contact the Materials Fabrication Inspection Office for guidance.

Representatives of the Materials Fabrication Inspection Office may take random samples at the point of fabrication and at the coating facility. The Fabricator shall provide the Mill Certificates to the Materials Fabrication Inspection Office Inspector.

4. Field Inspection: Check shipment for "APPROVED FOR SHIPMENT" stamp or tag (Figure 9-4 or 9-5). Check coating for shipping damage, check steel fabrication and bends for compliance with contract documents.

5. Specification Requirements: See *Standard Specifications* Section 9-07. Review contract document to determine if supplemental specifications apply.

9-4.28 Mechanical Splices

1. Approval of Material: Approval of materials is required prior to use. This approval may either be by virtue of the inclusion of this material/product on the Qualified Products List or by approval of a Request for Approval of Material (DOT Form 350-071). If approval is by means of QPL, be certain to verify that product is in fact qualified for its intended use, product is listed under appropriate specification.

2. Preliminary Sample: A preliminary sample for qualifying the rebar coupling system, will be required only if requested on Request for Approval of Material (DOT Form 350-071). The sample to include a made up splice for each size bar to be used and include the manufacturers product information. The overall length of spliced rebars should be approximately 5 to 6 feet (2 meters).

3. Acceptance: Material may be accepted on receipt of a "SATISFACTORY" Test Report from the State Materials Laboratory from contractors assembled samples (see Note) taken from the project. A Manufacturer's Certificate of Compliance and other technical data MUST be submitted with the samples. The overall length of spliced rebars should be at least 5 feet (2 meters).

Note: This is a test of the Contractors ability to properly assemble the splice as much as it is a test of the quality of the materials. For this reason the spliced bars <u>must</u> be assembled by the contractors personnel, witnessed by the inspector and transmitted <u>intact</u> to the State Material Lab for testing.

4. Field Inspection: Verify the materials received on the job site, is in fact the same make, model, lot, batch, size, color, blend, etc. as approved for use, be it by QPL or via the Request for Approval of Material (DOT Form 350-071), and having "Satisfactory" test results.

5. Specification Requirements: See *Standard Specifications* Section 6-02.3(24)F and G. Review contract documents to determine if supplemental specifications apply.

9-4.29 Rebar Chairs, Dobies, and Spacers

1. Approval of Material: Approval of materials is required prior to use. This approval may either be by virtue of the inclusion of this material/product on the Qualified Products List or by approval of a Request for Approval of Material (DOT Form 350-071). If approval is by means of QPL, be certain to verify that product is in fact qualified for its intended use, product is listed under appropriate specification.

2. Preliminary Sample: A preliminary sample of the material will be required only if requested on Request for Approval of Material (DOT Form 350-071).

3. Acceptance:

a. Dobie Blocks: Material may be accepted on receipt of Manufacturer's Certificate of Compliance with supporting test reports. See *Standard Specifications* Section 6-02.3(24)C.

b. Rebar Chairs and Spacers: May be accepted based upon inclusion in the QPL as an "Approved" product.

4. Field Inspection: Verify the materials received on the job site, is in fact the same make, model, lot, batch, size, color, blend, etc. as approved for use, be it by QPL or via the Request for Approval of Material (DOT Form 350-071).

5. Specification Requirements: See *Standard Specifications* Section 6-02.3(24)C. Review contract documents to determine if supplemental specifications apply.

9-4.30 Dowels and Tiebars for Concrete Pavement, incl. Epoxy Coated

1. Approval of Material: Approval of material is required prior to use. This approval may either be by virtue of the inclusion of this material/product on the Qualified Products List or by approval of a Request for Approval of Material (DOT Form 350-071). If approval is by means of QPL, be certain to verify that product is in fact qualified for its intended use, product is listed under appropriate specification.

2. Preliminary Sample: A preliminary sample of two dowels will be required only if requested on Request for Approval of Material (DOT Form 350-071).

3. Acceptance: Acceptance may be on Manufacturer's Certificate of Compliance with accompanying Mill Test Reports for both steel and coating process.

4. Field Inspection: Check for dimensional conformance and if proper mill test certificates have been provided. Check epoxy coating for damage and uniformity.

5. Specification Requirements: See *Standard Specifications* Section 9-07.5 and 9-07.6. Review contract documents to determine if supplemental specifications apply.

9-4.31 Wire Reinforcement for Concrete

1. Approval of Material: Approval of materials is required prior to use. This approval may either be by virtue of the inclusion of this material/product on the Qualified Products List or by approval of a Request for Approval of Material (DOT Form 350-071). If approval is by means of QPL, be certain to verify that product is in fact qualified for its intended use, product is listed under appropriate specification.

2. Preliminary Samples: May be required if requested on Request for Approval of Material (DOT Form 350-071).

3. Acceptance: Acceptance will be by the Manufacturer's Certificate of Compliance and Certified Mill Test Reports that accompany each shipment.

4. Field Inspection: Check for excessive rust on wire, and check the spacing of the wires and weight per square yard (meter).

5. Specification Requirements: See *Standard Specifications* Section 9-07.7, 9-07.8, 9-07.9. Review contract documents to determine if supplemental specifications apply.

9-4.32 Bridge Approach Slab Anchors

1. Approval of Material: Approval of material is required prior to use. This approval may either be by virtue of the inclusion of this material/product on the Qualified Products List or by approval of a Request for Approval of Material (DOT Form 350-071). If approval is by means of QPL, be certain to verify that product is in fact qualified for its intended use, product is listed under appropriate specification.

2. Preliminary Sample: A preliminary sample of the material will be required only if requested on Request for Approval of Material (DOT Form 350-071).

3. Acceptance:

a. Anchors Type A: These anchors may be accepted on a Manufacturers Certificate of Compliance for the Steel Rod and Plate.

b. Anchors Type B: These anchors may be accepted on a Manufacturers Certificate of Compliance for the Threaded Steel Rod and Steel Plate and Manufacturers Product Information on inch stop coupling.

c. Other Anchor Rod materials: Such as plastic pipe, polystyrene, and duct tape may be accepted on visual inspection.

4. Field Inspection: Check material delivered to the project for conformance with the contract plan and specifications.

5. Specification Requirements: See Standard Plans A2 and *Standard Specifications* Section 5-05.3(19). Review contract documents to determine if supplemental specifications apply.

9-4.33 Prestressing/Post Tensioning Reinforcement — Strand

1. Approval of Material: Approval of materials is required prior to use. This approval may either be by virtue of the inclusion of this material/product on the Qualified Products List or by approval of a Request for Approval of Material (DOT Form 350-071). If approval is by means of QPL, be certain to verify that product is in fact qualified for its intended use, product is listed under appropriate specification.

2. Preliminary Samples: A preliminary sample of the material will be required only if requested on Request for Approval of Material (DOT Form 350-071).

3. Acceptance: Acceptance will be on "SATISFACTORY" laboratory test report only. Submit one sample (minimum of 5 feet (2 meters) in length) from each reel or pack. A copy of a Manufacturer's Certificate of Compliance with supporting test report and stress/strain curve MUST accompany each sample submitted for testing.

4. Field Inspection: Check the strand for dirt, grease or rust. Verify the materials received on the job site, is in fact the same make, model, lot, batch, size, color, blend, etc.,

a approved for use, be it by QPL or via the Request for Approval of Material (DOT Form 350-071).

5. Specification Requirements: See *Standard Specifications* Section 9-07.10. Review contract documents to determine if supplemental specifications apply.

9-4.34 Prestressing/Post Tensioning Reinforcement — Bar

1. Approval of Material: Approval of materials is required prior to use. This approval may either be by virtue of the inclusion of this material/product on the Qualified Products List or by approval of a Request for Approval of Material (DOT Form 350-071). If approval is by means of QPL, be certain to verify that product is in fact qualified for its intended use, product is listed under appropriate specification.

2. Preliminary Samples: A preliminary sample of the material will be required only if requested on Request for Approval of Material (DOT Form 350-071).

3. Acceptance: Acceptance will be on "SATISFACTORY" laboratory test report only. Send two samples from each heat. If supplemental requirements apply, send additional samples of two bars from each heat. See contract documents. The samples must be a minimum of 5 feet (2 meters) in length. A copy of the Manufacturer's Certificate of Compliance shall accompany each heat of reinforcing bar.

4. Field Inspection: Check material delivered to the project for damage. Verify the materials received on the job site, is in fact the same make, lot, batch, size, etc., as approved for use, be it by QPL or via the Request for Approval of Material (DOT Form 350-071).

5. Specification Requirements: Review contract documents to determine specification requirements.

9-4.35 Paints for Structures

1. Approval of Material: Approval of source is required prior to use. This approval may either be by virtue of the inclusion of this material/product on the Qualified Products List or by approval of a Request for Approval of Material (DOT Form 350-071). If approval is by means of QPL, be certain to verify that product is in fact qualified for its intended use, product is listed under appropriate specification.

2. Preliminary Samples: Preliminary Samples will be required only if requested on Request for Approval of Material (DOT Form 350-071).

3. Acceptance: Paint will be sampled at the point of production and tested by the State Materials Laboratory prior to its receipt on the project. The lot number on the containers must be checked against the Laboratory test reports. Except as indicated, paint which has not been tested and accepted by the Laboratory will **not** be used. When less than 20 gallons (80 liters) of one kind of paint are involved, its use without laboratory tests may be approved upon the Manufacturer's Certificate of Compliance that the material meets the specification. The certificate shall include a list of materials and the quantities used. One copy of the certificate shall be submitted to the State Materials Laboratory for approval.

4. Field Inspection: No field samples are required. Material shall be accepted on satisfactory test report or lot approval by the State Materials Laboratory. Verify the materials received on the job site, is in fact the same make, model, lot, batch, size, color, blend, etc. as approved for use, be it by QPL or via the Request for Approval of Material (DOT Form 350-071).

See that paint is not caked in the container, that it is free from skins and is well stirred before withdrawing portions for use.

After application the paint should dry to a uniform film without running, streaking or sagging.

5. Specification Requirements: See *Standard Specifications* Section 9-08. Review contract documents to determine if supplemental specifications apply.

9-4.36 Structural Timber and Lumber — Untreated

1. Approval of Material: Approval of material is required prior to use. This approval may either be by virtue of the inclusion of this material/product on the Qualified Products List or by approval of a Request for Approval of Material (DOT Form 350-071). If approval is by means of QPL, be certain to verify that product is in fact qualified for its intended use, product is listed under appropriate specification.

2. Preliminary Samples: A preliminary sample of the material will be required only if requested on Request for Approval of Material (DOT Form 350-071).

3. Acceptance:

   a. Permanent structures require a Manufacturer's Certificate of Compliance (i.e., Grading Certificate) conforming to the requirements of the *Standard Specifications*. The Grading Certificate will be issued by the grading bureau whose authorized stamp is being used, or by the mill grading the timber or lumber under the supervision of one of the following lumber grading agencies: West Coast Lumber Inspection Bureau (WCLIB), Western Wood Products Association (WWPA), or the Pacific Lumber Inspection Bureau (PLIB). A typical lumber grade stamp as used by the various inspection agencies are shown in the QPL, Appendix B:

   b. Sign posts, mileposts, sawed fence posts, and mailbox posts will be accepted by visual determination in the field that materials delivered to the job site bears the appropriate lumber grading stamp. The PLIB graded lumber will be graded under the grading rules of one of the other two listed agencies and will be grade stamped accordingly. All timber and lumber is subject to re-inspection upon delivery to the project.

4. Field Inspection: Check that all lumber and timber has the proper lumber grade stamps.

5. Specification Requirements: See *Standard Specifications* Section 9-09. Review contract documents to determine if supplemental specifications apply.

9-4.37 Treated Timber and Piling

1. Approval of Material: Approval of materials and treating facility are required prior to use. This approval may either be by virtue of the inclusion of this material/product on the Qualified Products List or by approval of a Request for Approval of Material (DOT Form 350-071). If approval is by means of QPL, be certain to verify that product is in fact qualified for its intended use, product is listed under appropriate specification.

2. Preliminary Samples: A preliminary sample of the material will be required only if requested on Request for Approval of Material (DOT Form 350-071).

3. Acceptance:

   a. Permanent structures, sign posts 6 inches x 6 inches (150 mm x 150 mm) and larger. Check for "APPROVED FOR SHIPMENT" tag (Figure 9-6). Approved for shipment tags will be stapled to the ends of the pilings or timber. All piling will be stamped or tagged on the butt end. Only about one-third of the approved timber pieces will be stamped or tagged for acceptance.

   b. Sign posts less than 6 inches x 6 inches (150 mm x 150 mm), mileposts, sawed fence posts, and mailbox posts shall be accepted as listed under 9-4.36.

4. Field Inspection: Check primarily for damage caused by handling. Check pieces for "APPROVED FOR SHIPMENT" stamp or tag (Figure 9-6).

5. Specification Requirements: See *Standard Specifications* Sections 9-09 and 9-10. Review contract documents to determine if supplemental specifications apply.

9-4.38 Piling — Untreated

1. Approval of Material: Approval of material is not required prior to use for temporary structures.

2. Preliminary Samples: A preliminary sample of the material will be required only if requested on Request for Approval of Material (DOT Form 350-071).

3. Acceptance: Field inspection for compliance with contract requirements.

4. Field Inspection: Check for compliance with specifications.

5. Specification Requirements: See *Standard Specifications* Section 9-10.1(1). Review contract documents to determine if supplemental specifications apply.

9-4.39 Steel H-Piling

1. Approval of Material: Approval of material is required prior to use. This approval may either be by virtue of the inclusion of this material/product on the Qualified Products List or by approval of a Request for Approval of Material (DOT Form 350-071). If approval is by means of QPL, be certain to verify that product is in fact qualified for its intended use, product is listed under appropriate specification.

2. Preliminary Samples: Samples are not required unless requested on Request for Approval of Material (DOT Form 350-071). Submit a 1-foot (300-mm) section of the piling if requested.

3. Acceptance: Material may be accepted on satisfactory Manufacturer's Certificate of Compliance including mill certificates showing heat number, physical properties and chemical composition.

4. Field Inspection: Check material in each shipment against heat numbers shown on Mill Test Certificates. Check for damage due to shipping and handling.

5. Specification Requirements: See *Standard Specifications* Section 9-10.5. Review contract documents to determine if supplemental specifications apply.

9-4.40 Hollow Steel Piling and Jack Casing

1. Approval of Material: Approval of material is required prior to use. This approval may either be by virtue of the inclusion of this material/product on the Qualified Products List or by approval of a Request for Approval of Material (DOT Form 350-071). If approval is by means of QPL, be certain to verify that product is in fact qualified for its intended use, product is listed under appropriate specification.

2. Preliminary Sample: Samples are not required unless requested on Request for Approval of Material (DOT Form 350-071). Submit a 1-square foot (300 mm^2) section of the piling if requested.

3. Acceptance: Material may be accepted on satisfactory Manufacturer's Certificate of Compliance showing heat number, physical properties, and chemical composition.

4. Field Inspection: Check material in each shipment against heat numbers shown on Mill Test Certificates. Check for damage due to shipping and handling.

5. Specification Requirements: See *Standard Specifications* Section 9-10.5. Review contract documents to determine if supplemental specifications apply.

9-4.41 Precast Concrete Catch Basins, Manholes, and Inlets

1. Approval of Material: Approval of materials is required prior to use. This approval may either be by virtue of the inclusion of this material/product on the Qualified Products List or by approval of a Request for Approval of Material (DOT Form 350-071). If approval is by means of QPL, be certain to verify that product is in fact qualified for its intended use, product is listed under appropriate specification.

2. Preliminary Samples: A preliminary sample of the material will be required only if requested on Request for Approval of Material (DOT Form 350-071).

3. Acceptance: Acceptance will be based on "WSDOT Inspected" stamp (Figure 9-3) provided by the Materials Fabrication Inspection Office Inspector.

4. Field Inspection: Check for shipping and handling damage and "WSDOT Inspected" stamp (Figure 9-3).

5. Specification Requirements: See *Standard Specifications* Section 9-12. Review contract documents to determine if supplemental specifications apply.

9-4.42 Riprap, Quarry Spalls, Slope Protection, and Rock Wall

1. Approval of Material: Consult the Aggregate Sources Approval (ASA) database for approval of material for each source prior to use.

2. Preliminary Samples: A preliminary sample of the material will be required only if requested on the Request for Approval of Material (DOT Form 350-071) or if the ASA database indicated that the aggregate source has expired. Contact the Regional Materials Office if preliminary samples are required. Preliminary samples for the aggregate shall be made up of 50-80 pounds (25-35 kilograms) are required to perform the quality tests. The sample is to be shipped in increments, using satisfactory containers, not exceeding 30 pounds (15 kilograms).

3. Acceptance:

   a. When project quantities are less than 130 cubic yards (100 cubic meters) 250 tons (tonnes), the Project Engineer may accept the material by visual inspection.

   b. When project quantities exceed 130 cubic yards (100 cubic meters) 250 tons (tonnes), the Project Engineer shall determine that the grading is in conformance with the *Standard Specifications* Section 9-13, or that the Gabion Stone is in conformance with Section 9-27.

4. Field Inspection: See that the gradation remains constant.

5. Specification Requirements: See *Standard Specifications* Section 9-13.

9-4.43 Semi-Open Slope Protection

1. Approval of Material: Approval of material is required prior to use. This approval may either be by virtue of the inclusion of this material/product on the Qualified Products List or by approval of a Request for Approval of Material (DOT Form 350-071). If approval is by means of QPL, be certain to verify that product is in fact qualified for its intended use, product is listed under appropriate specification.

2. Preliminary Samples: A preliminary sample of the material will be required only if requested on Request for Approval of Material (DOT Form 350-071).

3. Acceptance: Material may be accepted on receipt of Manufacturer's Certificate of Compliance.

4. Field Inspection: Check material delivered to the project for conformance with the contract plan and specifications. Also check for shipping damage.

5. Specification Requirements: See *Standard Specifications* Section 9-13.5. See Standard Plans. Review contract documents to determine if supplemental specifications apply.

9-4.44 Plant Material

1. Approval of Material: Approval of material is required prior to use. This approval will be submitted to the field office by listing the nursery to supply the plant material on a Request for Approval of Material (DOT Form 350-071).

2. Preliminary Site Inspection, when requested on the RAM, will be performed by the Region Landscape Architect or the State Horticulturalist.

3. Acceptance: After the approval of the material, the plants will be accepted based on field inspection on the job site. Sample lots as provided in (4), Field Inspection will be the inspection of samples delivered to the site. Acceptable samples will be incorporated into the project.

4. Field Inspection: Check for uniformity of plants within each lot and for representative sample lot based on the following:

(N = total number of plants in lot)
(n = number of plants in sample lot)

Total Number of Plants (N)	Minimum No. of Plants Required to Make Sample Lot (n)
0 - 500	All plants
501 - 1,000	500
1,001 - 5,000	600
5,001 - 30,000	850
Over 30,000	1000

Should 5 percent or less of the sample lot fail, the entire lot may be accepted. Should over 5 percent of the acceptance sample lot fail to meet nominal specification requirements, the entire lot shall be rejected and removed from the job.The Engineer may accept the plants if there is a large percentage of plants that appears to be exceptionally hearty and vigorous after sorting by the Contractor. If done immediately, the Contractor shall be allowed to sort and remove the substandard portion of the plants.

After the contractor has completed sorting, a new sample lot based on the above schedule of the remaining stock will again be selected and inspected. Should 5 percent or less of this sample lot fail, the sorted lot may be accepted.

5. Specification Requirements: See *Standard Specifications* Section 9-14.6. Review contract documents to determine if supplemental specifications apply.

9-4.45 Topsoil Type A

1. Approval of Material: Approval of Topsoil Type A prior to use is required by a Request for Approval of Material (DOT Form 350-071).

2. Preliminary Samples: A preliminary sample of the material will be required only if requested on Request for Approval of Material (DOT Form 350-071). Samples of (5-10 pounds (3-5 kilograms) are required to perform the qualifying tests.

3. Acceptance: Material may be accepted upon receipt of a Manufacturer's Certificate of Compliance with accompanying test reports verifying conformance with the Contract Specifications.

4. Field Inspection: The material shall be inspected for roots, weeds, subsoil, rocks, and other debris.

5. Specification Requirements: See *Standard Specifications* Section 9-14.1. Review contract documents to determine if supplemental specifications apply.

9-4.46 Seed

1. Approval of Material: Approval of materials is required prior to use. This approval may either be by virtue of the inclusion of this material/product on the Qualified Products List or by approval of a Request for Approval of Material (DOT Form 350-071). If approval is by means of QPL, be certain to verify that product is in fact qualified for its intended use, product is listed under appropriate specification. If there is a question on the intended use of the seed, contact the State Horticulturist.

2. Preliminary Samples: A preliminary sample of the material will be required only if requested on Request for Approval of Material (DOT Form 350-071).

3. Acceptance: Material may be accepted on analysis shown on the label. If using the QPL, be sure to verify appropriate means of acceptance, see applicable Acceptance Code within the QPL.

4. Field Inspection: Each individual sack of seed must contain a label (tag) as to the contents and be unopened prior to use on the project. At least one label should be retained in the project records in the event that subsequent questions or claims may arise. Verify the materials received on the job site, is in fact the same make, model, lot, batch, size, color, blend, etc. as approved for use, be it by QPL or via the Request for Approval of Material (DOT Form 350-071).

5. Specification Requirements: See *Standard Specifications* Section 9-14.2. Review contract documents to determine if supplemental specifications apply.

9-4.47 Fertilizer

1. Approval of Material: Approval of materials is required prior to use. This approval may either be by virtue of the inclusion of this material/product on the Qualified Products List or by approval of a Request for Approval of Material (DOT Form 350-071). If approval is by means of QPL, be certain to verify that product is in fact qualified for its intended use, product is listed under appropriate specification. If there is a question on the intended use of the fertilizer, contact the State Horticulturist.

2. Preliminary Samples: A preliminary sample of the material will be required only if requested on Request for Approval of Material (DOT Form 350-071).

3. Acceptance:

   a. Fertilizer for General Use. Fertilizer may be accepted based on approval of material and chemical content shown on container labels meeting contract requirement. No fertilizer shall be used from unidentified or unlabeled containers.

   b. Fertilizer for Erosion Control. For Erosion Control on projects with total quantities less than 5 acres (2 hectares) of Compliance, acceptance of fertilizer may be made by verification of the components based on stamped or printed bag analysis. Projects involving 5 acres (2 hectares) or more shall require a certified analysis of each component furnished meeting the requirements of a Manufacturer's Certificate

   c. Fertilizer for Landscaping. Fertilizer for landscaping projects may be accepted on the basis of examination of the labeled contents for conformance to the project specifications.

4. Field Inspection: Verify the materials received on the job site, is in fact the same make, model, lot, batch, size, color, blend, etc. as approved for use, be it by QPL or via the Request for Approval of Material (DOT Form 350-071). Each individual sack must be labeled as to its contents, which must meet the requirements specified in the special provisions. All bags must be unopened prior to use on the project. Most fertilizers specified contain ureaform (38-0-0) which is blue-green in color, which makes that component's presence easy to identify. Retain label showing analysis for contract records.

5. Specification Requirements: See *Standard Specifications* Section 9-14.3. Review contract documents to determine if supplemental specifications apply.

9-4.48 Mulch

1. Approval of Material: Approval of material is required prior to use. This approval may either be by virtue of the inclusion of this material/product on the Qualified Products List or by approval of a Request for Approval of Material (DOT Form 350-071). If approval is by means of QPL, be certain to verify that product is in fact qualified for its intended use, product is listed under appropriate specification.

2. Preliminary Samples: A preliminary sample of the material will be required only if requested on Request for Approval of Material (DOT Form 350-071).

3. Acceptance: Material may be accepted as described below for the different types of mulch:

   a. Straw — Visual inspection

   b. Wood Cellulose Fiber — Manufacturer's Certificate of Compliance

   c. Bark — Field gradation test (WSDOT Test Method 123)

   d. Sawdust — Visual inspection

   e. Tackifier — Manufacturer's Certification of Compliance

f. Compost — Waste handling permit, etc. see contract provisions.To purchase Solvita Compost Maturity Test Kits for field office use contact:
Woods End Research Laboratory, Inc.
Box 297,
Mount Vernon, Maine 04352
(207)-293-2457
E-mail: info@woodsend.org

4. Field Inspection: Verify the material received on the job site, is in fact the same make, model, lot, batch, size, color, blend, etc. as approved for use, be it by QPL or via the Request for Approval of Material (DOT Form 350-071). A visual inspection shall be made to ensure uniformity of the mulch. Also check for detrimental contamination.

5. Specification Requirements: See *Standard Specifications* Section 9-14.4. Review contract documents to determine if supplemental specifications apply.

9-4.49 Irrigation System

1. Approval of Material: Approval of material is required prior to use. This approval may either be by virtue of the inclusion of this material/product on the Qualified Products List or by approval of a Request for Approval of Material (DOT Form 350-071). If approval is by means of the QPL, be certain to verify that product is in fact qualified for its intended use, product is listed under appropriate specification. If approval action is being requested via the RAM process, attach Catalog Cuts or other appropriate documents, using proper transmittal, to assist RAM Engineer in the approval process.

2. Preliminary Samples: A preliminary sample of the material will be required only if requested on Request for Approval of Material (DOT Form 350-071).

3. Acceptance: The irrigation system material, when approved as noted above, may be accepted in the field by verifying that the materials placed on the job are the same make model, lot, batch, size, color, blend, etc. that was, in fact, approved. In addition the following materials will need appropriate documentation and transmittals as noted below:

a. PVC Water Pipe - Manufacturer's Certificate of Compliance

b. Polyethylene Pipe – Manufacturer's Certificate of Compliance

c. Galvanized Iron Pipe – Manufacturer's Certificate of Compliance

4. Field Inspection: Check for damage to the galvanized coatings in shipping and handling. See that damaged areas and field cut threads are protected with an approved galvanized repair paint formula, standard formula A-9-73. Verify the materials received on the job site, is in fact the same make, model, lot, batch, size, color, blend, etc. as approved for use, be it by QPL or via the Request for Approval of Material (DOT Form 350-071).

5. Specification Requirements: See *Standard Specifications* Section 9-15. Review contract documents to determine if supplemental specifications apply.

9-4.50 Fencing

1. Approval of Material: Approval of material is required prior to use. This approval may either be by virtue of the inclusion of this material/product on the Qualified Products List or by approval of a Request for Approval of Material (DOT Form 350-071). If approval is by means of QPL, be certain to verify that product is in fact qualified for its intended use, product is listed under appropriate specification.

2. Preliminary Samples: A preliminary sample of the material will be required only if requested on Request for Approval of Material (DOT Form 350-071).

3. Acceptance: Material may be accepted on receipt of "SATISFACTORY" test report from the State or Regional Materials Laboratory. Send acceptance samples as follows:

a. Chain Link Fabric — One sample consisting of three wires across full width of fabric from one roll for each 50 rolls.

b. Wire Mesh — One 12-inch (300-mm) sample across full width of roll, from one roll for each 50 rolls.

c. Tension and Barbed Wire — One 3-foot (1-meter) piece from one roll for each 50 spools.

d. Rails and Class 1 Posts for Chain Link Fence — Sample to consist of one post and rail, where applicable, for each 500 post or rails or fraction thereof.

e. Class 2 Posts for Chain Link Fence — Posts may only be used East of Cascades. Manufacturer's Certificate of Compliance must identify min. yield strength and both interior and exterior zinc coating thickness; otherwise, post must be sampled as above and tested to Class 1 specifications.

f. Wire Fence Line Posts — One complete post with plate for each 500 posts or fraction thereof.

g. Corner Posts or brace posts — One complete post assembly per 10 corner or brace posts.

h. Misc. Fence Hardware — These materials includes such items as tie wire, hog rings, galvanized bolts and nuts, fence clips, stays, post caps, tension band and bars, rail end caps, etc. The Engineer shall visually inspect and approve for use.

Above samples are to be taken from properly identified lots of material stored at job site. Be sure samples are numbered and properly identified as to Lot, if applicable, when sent to the Laboratory. If first sample fails, two additional samples are to be submitted from same lot. Resamples are to be properly identified as to Lot and referenced to previous Lab No. for first sample.

4. Field Inspection: Check for damage to zinc or other coating on posts, rails, hardware, etc. Verify the materials received on the job site, is in fact the same make, model, lot, batch, size, color, blend, etc. as approved for use, be it by QPL or via the Request for Approval of Material (DOT Form 350-071).

5. Specification Requirements: See *Standard Specifications* Section 9-16. Review contract documents to determine if supplemental specifications apply.

9-4.51 Beam Guardrail, Guardrail Anchors, and Glare Screen

1. Approval of Material: Approval of Material is required prior to use. This approval may either be by virtue of the inclusion of this materials/product on the Qualified Products List or by approval of a Request of Approval of Material (DOT Form 350-071). If approval is by means of QPL, be certain to verify that product is in fact qualified for its intended use, product is listed under appropriate specification.

2. Preliminary Samples: A preliminary sample of the material will be required only if requested on Request for Approval of Material (DOT Form 350-071).

3. Acceptance: Materials listed on the Qualified Products List may be accepted as outlined on the QPL or by Manufacturers Certificate of Compliance meeting the requirements of *Standard Specifications* Section 1-06.3 including supporting test reports.

4. Field Inspection: Check material delivered to the project for damage to galvanizing.

5. Specification Requirements: See *Standard Specifications* Section 9-16.3.

9-4.52 Guardrail Posts and Blocks

1. Approval of Material: Approval of material and treating facility is required prior to use. This Approval may either be by virtue of the inclusion of this material/product on the Qualified Products List or by approval of a Request for Approval of Material (DOT Form 350-071). If approval is by means of QPL, be certain to verify that product is in fact qualified for its intended use, product is listed under appropriate specification.

2. Preliminary Samples: A preliminary sample of the material will be required only if requested on the Request for Approval of Material (DOT Form 350-071).

3. Acceptance: Materials listed on the Qualified Products List may be accepted as outlined on the QPL. Materials not listed on the QPL will be accepted by receipt of an acceptable certificate of treatment and by visual determination in the filed that materials delivered to the job site bears the appropriate lumber grading stamp.

4. Field Inspection: Check material delivered to the project for conformance with the contract plan and specifications.

5. Specification Requirements: See Standard Plans.

9-4.53 Miscellaneous Precast Concrete Products (Block Traffic Curb, Precast Traffic Curb)

1. Approval of Material: Approval of material is required prior to use. This approval may either be by virtue of the inclusion of this material/product on the Qualified Products List or by approval of a Request for Approval of Material (DOT Form 350-071). If approval is by means of QPL, be certain to verify that product is in fact qualified for its intended use, product is listed under appropriate specification.

2. Preliminary Samples: A preliminary sample of the material will be required only if requested on Request for Approval of Material (DOT Form 350-071).

3. Acceptance: In general, the Materials Fabrication Inspection Office will not, undertake inspection of these products. When large quantities are involved, the Regional Administrator should arrange for inspection during manufacturer, including the sampling of materials and the making of test cylinders.

   a. Precast Traffic Curb — Acceptance on field inspection. Unless the curb sections have been inspected prior to shipping they are to be carefully inspected upon arrival on the project site. Check for surface color and damage, such as cracks, broken corner or edges, contour and alignment. Surface color and texture should match advanced sample provide by the manufacturer. See Standard Plans for details.

   b. Block Traffic Curb — Acceptance on visual inspection. Check exposed faces of curb sections for damage such as chips, cracks, and air holes. See *Standard Specifications* Section 9-18.3 for details. Compressive strength may be determined in accordance with the FOP for ASTM C 805.

4. Field Inspection: Check for damage due to shipping and handling.

5. Specification Requirements: See *Standard Specifications* Sections 9-18. Review contract documents to determine if supplemental specifications apply.

9-4.54 Prestressed Concrete Products

1. Approval of Material: Approval of fabricator and materials are required prior to use. This approval may either be by virtue of the inclusion of this material/product on the Qualified Products List or by approval of a Request for Approval of Material (DOT Form 350-071). Notify Materials Fabrication Inspection Office of need to provide Inspection Services, or to verify that the prestress plants annual review and approval is current.

2. Preliminary Samples: A preliminary sample of the material will be required only if requested on Request for Approval of Material (DOT Form 350-071).

3. Acceptance: Acceptance will be based on “APPROVED FOR SHIPMENT” stamp or tags (Figure 9-4 or 9-5) from Materials Fabrication Inspection Office inspection and on field inspection for damage due to shipping and handling.

4. Field Inspection: Check for damage due to shipping and handling. Check and record “APPROVED FOR SHIPMENT” stamp or tag (Figure 9-4 or 9-5).

5. Specification Requirements: See *Standard Specifications* Section 6-02.3(25), 6-02.3(26), 6-02.3(28), and Section 9-19. Review contract documents to determine if supplemental specifications apply.

9-4.55 Raised Pavement Markers, Types 1, 2, and 3

1. Approval of Material: Approval of materials is required prior to use. This approval may either be by virtue of the inclusion of this material/product on the Qualified Products List or by approval of a Request for Approval of Material (DOT Form 350-071). If approval is by means of QPL, be certain to verify that product is in fact qualified for its intended use, product is listed under appropriate specification.

2. Preliminary Samples: A preliminary sample of the material will be required only if requested on Request for Approval of Material (DOT Form 350-071).

3. Acceptance:

a. Type 1 Markers.

b. Plastic Markers: Shall be from tested and approved lots identified with an "APPROVED FOR SHIPMENT" stamp (Figure 9-4). After use, all emptied, marked boxes shall be destroyed.

c. Thermoplastic Markers: Markers listed on the QPL may be accepted based on visual inspection as to brand and model listed. Verification samples of Type 1 thermoplastic markers are required for each lot used on a project. A sample shall consist of three markers per job lot (from different boxes) for each color.

d. Type 2 Markers: Only markers listed on the QPL may be accepted, visually inspect markers as to brand and model listed.

e. Type 3 Markers: Only markers listed on the QPL may be accepted, visually inspect markers as to brand and model listed.

4. Field Inspection: A visual inspection shall be made to ensure that cracked or damaged lane markers are not incorporated in the work.

5. Specification Requirements: See *Standard Specifications* Section 9-21. Review contract documents to determine if supplemental specifications apply.

9-4.56 Signing Materials

1. Approval of Material: Approval of the sign fabricator as well as the manufacturer of the sign blanks, panels and the reflective sheeting is required prior to use. A RAM will not be required for sign mounting hardware. The approval of the sign fabricator will be by the Request for Approval of Material (DOT Form 350-071). The approval of the sign blanks, panels and the reflective sheeting may either be by virtue of the inclusion of this material/product on the Qualified Products List or by approval of a Request for Approval of Material (DOT Form 350-071). If approval is by means of QPL, be certain to verify that product is in fact qualified for its intended use; product is listed under appropriate specification. The fabrication facility will notify Sign Fabrication Inspector of need to provide Inspection Services.

2. Preliminary Samples: A preliminary sample of the material may be requested on the Request for Approval of Material (DOT Form 350-071), or as requested by the Sign Fabricator Inspector.

3. Acceptance: Materials and fabrication will be accepted on "FABRICATION APPROVED" decal (Figure 9-8).

a. Sign Blanks: As soon as the fabricator receives the materials, the Sign Fabricator Inspector will check the accompanying mill test certificates to ensure the materials meet contract requirements. These documents will be kept at the fabrication facility.

b. Reflective Sheeting: The Sign Fabricator Inspector will check the Manufacturer's Certificate of Compliance for the reflective sheeting and the cutout legend to ensure the materials meet contract requirements. These will be kept at the sign fabrication facility.

c. Sign mounting hardware certifications will be verified at the sign fabricator's facility to ensure the materials meet the contract requirements. These records will be kept at the sign fabrication facility. Sign mounting hardware will be packaged for each job and a "WSDOT INSPECTED" Stamp attached at the fabrication facility.

4. Field Inspection: Check for a "FABRICATION APPROVED" decal (Figure 9-8) on the back of the sign and document Inspector's Daily Report. Check for a "WSDOT INSPECTED" stamp on sign mounting hardware and document in Inspector's daily report. Check that all overhead signs are mounted with stainless steel bolts, u-bolts, washers, nuts, locknuts, mounting brackets and straps. Mounting hardware shall include bolts, nuts, washers, locknuts, rivets, post clips, windbeams, angles, "Z" bar, straps and mounting brackets. Check for damage due to shipping, handling, and installation.

5. Specification Requirements: See *Standard Specifications* Section 9-28, and Section 9-1.5G of this manual. Review contract documents to determine if supplemental specifications apply.

9-4.57 Concrete Curing Compounds

1. Approval of Material: Approval of materials is required prior to use. This approval may either be by virtue of the inclusion of this material/product on the Qualified Products List or by approval of a Request for Approval of Material (DOT Form 350-071). If approval is by means of QPL, be certain to verify that product is in fact qualified for its intended use, product is listed under appropriate specification.

2. Preliminary Samples: A preliminary sample of the material will be required only if requested on Request for Approval of Material (DOT Form 350-071).

3. Acceptance: Submit 1 quart (1 liter) for each lot of curing compound delivered to each project. Material will be accepted based on "SATISFACTORY" test results from the State Materials Laboratory on samples taken from the project. No curing compound shall be used on WSDOT work prior to testing of each lot. Samples must be submitted for testing 14 days prior to use of curing compound.

4. Field Inspection: Check different lots for similarity in appearance and working properties. Check that the lots being used have "Satisfactory" test reports from the State Materials Laboratory.

5. Specification Requirements: See *Standard Specifications* Sections 9-23. Review contract documents to determine if supplemental specifications apply.

9-4.58 Admixtures for Concrete

1. Approval of Material: Approval of material is required prior to use. This approval may either be by virtue of the inclusion of this material/product on the Qualified Products List or by approval of a Request for Approval of Material (DOT Form 350-071). If approval is by means of QPL, be certain to verify that product is in fact qualified for its intended use, product is listed under appropriate specification.

2. Preliminary Samples: A preliminary sample of the material will be required only if requested on Request for Approval of Material (DOT Form 350-071).

3. Acceptance: Acceptance will be on the basis of Certified Concrete Delivery Ticket, *Standard Specifications* Section 6-02.3(5)B, indicating the brand/product and dosage of the admixture as shown on the concrete mix design.

4. Field Inspection: Check Concrete Delivery Ticket for proper admixture usage. Verify the materials received on the job site, is in fact the same make, model, lot, batch, size, color, blend, etc. as approved for use, be it by QPL or via the Request for Approval of Material (DOT Form 350-071).

5. Specification Requirements: See *Standard Specifications* Section 6-02.3(5) B and 9-23. Review contract documents to determine if supplemental specifications apply.

9-4.59 Plastic Waterstop

1. Approval of Material: Approval of material is required prior to use. This approval may either be by virtue of the inclusion of this material/product on the Qualified Products List or by approval of a Request for Approval of Material (DOT Form 350-071). If approval is by means of QPL, be certain to verify that product is in fact qualified for its intended use, product is listed under appropriate specification.

2. Preliminary Samples: A preliminary sample of the material will be required only if requested on Request for Approval of Material (DOT Form 350-071).

3. Acceptance: Material may be accepted on basis of Manufacturer's Certificate of Compliance.

4. Field Inspection: Check for uniformity of product in lot, and for damage in shipment or handling. Verify the materials received on the job site, is in fact the same make, model, lot, batch, size, color, blend, etc. as approved for use, be it by QPL or via the Request for Approval of Material (DOT Form 350-071).

5. Specification Requirements: See *Standard Specifications* Section 9-24. Review contract documents to determine if supplemental specifications apply.

9-4.60 Epoxy Systems

1. Approval of Material: Approval of material is required prior to use. This approval may either be by virtue of the inclusion of this material/product on the Qualified Products List or by approval of a Request for Approval of Material (DOT Form 350-071). If approval is by means of QPL, be certain to verify that product is in fact qualified for its intended use, product is listed under appropriate specification.

2. Preliminary Samples: A preliminary sample of the material will be required only if requested on Request for Approval of Material (DOT Form 350-071).

3. Acceptance/Verification

   a. Acceptance: Material may be accepted for use on receipt of a passing test report from the State Materials Laboratory. For epoxy bonding agents, submit mix ratios, intended use and a representative sample of each component for each batch or lot number. A representative sample may consist of 1 pint of each component for bulk lots or a pre-packaged kit. Containers shall be identified as "Component A" (contains the Epoxy Resin) and "Component B" (contains the Curing Agent) and shall be marked with the name of the manufacturer, the date of manufacture and the lot number. If the material is to be used as an epoxy grout, mortar or concrete, include a 5-pound representative sample of aggregate. Samples shall be submitted to the State Materials Laboratory. Epoxy Adhesive for Lane Markers does not require field sampling, but does require a Manufacturer's Certificate of Compliance. A period of 15 working days should be allowed for testing.

   b. Verification: Proper proportioning of Epoxy Adhesive for Lane Markers can be verified at the State Materials Laboratory if desired. Submit a 1 pint sample of the field mixed epoxy in question and a 1 pint sample of each component as is detailed under "Acceptance" above.

4. Field Inspection: Check for uniformity of color and conformance to required mix proportions. Streaking is an indication of inadequate mixing. Check for set and hardness with your thumbnail. You should not be able to dent the properly mixed and cured material. Epoxies shall be mixed and applied in conformance to manufacturer's written instructions unless otherwise modified in writing by the manufacturer's agent. Verify the materials received on the job site, is in fact the same type, grade, and class, etc., as approved for use, be it by QPL or via the Request for Approval of Material (DOT Form 350-071).

5. Specification Requirements: See *Standard Specifications* Section 9-26. Review contract documents to determine if supplemental specifications apply.

9-4.61 Resin Bonded Anchors

1. Approval of Material Prior to Use: Approval of material is required prior to use. This approval may either be by virtue of the inclusion of this material/product on the Qualified Products List or by approval of a Request for Approval of Material (DOT Form 350-071). If approval is by means of QPL, be certain to verify that product is in fact qualified for its intended use, product is listed under appropriate specification.

2. Preliminary Samples: A preliminary sample of the material will be required only if requested on Request for Approval of Material (DOT Form 350-071).

3. Acceptance:

   a. Qualified Product Listed Product: If Product is listed on QPL, the acceptance of the resin adhesive shall be by field acceptance procedures documenting that brand and model of the resin system. Threaded rod, nut and washer or other inserts shall be accepted on the basis of a Manufacturer's Certificate of Compliance with supporting Mill Test Reports indicating they meet the contract requirements.

   b. Non-qualified Product Listed Product: Submit independent test lab data indicating resin system meets specifications when tested in accordance with ASTM E 488, and threaded rod, nut and washer or other inserts shall be accepted on the basis of a Manufacturer's Certificate of Compliance with supporting Mill Test Reports indicating they meet the contract requirements.

4. Field Inspection: Check for proper embedment depths, check that holes are properly cleaned. Check that the installation is in accordance with the manufacturers written instructions.

5. Specification Requirements: Review contract documents to determine if supplemental specifications apply.

9-4.62 Gabion Baskets

1. Approval of Material: Approval of material is required prior to use. This approval may either be by virtue of the inclusion of this material/product on the Qualified Products List or by approval of a Request for Approval of Material (DOT Form 350-071). If approval is by means of QPL, be certain to verify that product is in fact qualified for its intended use, product is listed under appropriate specification.

2. Preliminary Samples: A preliminary sample of the material will be required only if requested on Request for Approval of Material (DOT Form 350-071). The sample shall consist of the following:

   a. One square yard (meter) of mesh including selvage and body wire.

   b. Three feet (1 meter) of tie wire.

   c. Three feet (1 meter) of lacing wire.

   d. Six each wire clips, fasteners.

3. Acceptance: Acceptance is based on receipt of a Manufacturer's Certificate of Compliance with accompanying Mill Test Report.

4. Field Inspection: Check for damage.

5. Specification Requirements: See *Standard Specifications* Section 9-27.3. Review control documents to determine if supplemental specifications apply.

9-4.63 Sign Structures

1. Approval of Material: Approval of Material: Approval of the fabricator as well as the manufacturer of the steel is required prior to use. Upon receipt of the "Request for Approval of Material," the Materials Fabrication Inspection Office will inspect the fabrication shop to ensure it meets all contract requirements. A copy of the Request for Approval of Material will be sent to the Materials Fabrication Inspection Office.

2. Preliminary Samples: A preliminary sample of the material will be required only if requested on Request for Approval of Material (DOT Form 350-071).

3. Acceptance: The fabricated sign structure and associated hardware will be accepted on the basis of an "APPROVED FOR SHIPMENT" stamp (Figure 9-8) and a "WSDOT INSPECTED" stamp (Figure 9-5) respectively. When the structures are fabricated out-of-state and are shipped directly to the job site, arrangements must be made with the Materials Fabrication Inspection Office to have the structures and hardware inspected prior to erection. Manufacturer's Certificates of Compliance will be required to be delivered with the signs from out-of-state fabrication facilities.

4. Field Inspection: Check for "APPROVED FOR SHIPMENT" stamp (Figure 9-8) and a "WSDOT INSPECTED" stamp for the associated hardware (Figure 9-5) and damage due to shipping, handling and erection.

5. Specification Requirements: See design standards and *Standard Specifications* Section 9-28.15. Review contract documents to determine if supplemental specifications apply.

9-4.64 Conduit

1. Approval of Material: Approval of materials is required prior to use. This approval may either be by virtue of the inclusion of this material/product on the Qualified Products List or by approval of a Request for Approval of Material (DOT Form 350-071). If approval is by means of QPL, be certain to verify that product is in fact qualified for its intended use, product is listed under appropriate specification.

2. Preliminary Samples: A preliminary sample of the material will be required only if requested on Request for Approval of Material (DOT Form 350-071).

3. Acceptance: If using the QPL, be sure to verify appropriate means of acceptance, see applicable Acceptance Code within the QPL.

a. Galvanized conduit shall be accepted on receipt of "SATISFACTORY" test reports from State Materials Laboratory for each size and shipment. Each sample requires two 12-inch (300-mm) sections, one from each end of a standard length of conduit. Re-sampling, when directed, requires twice the number of pieces specified. Be sure that matching end pieces are identified.

The Project Engineer may accept galvanized conduit based on nondestructive testing according to the FOP for ASTM D 1186.

b. Fiber reinforced plastic, flexible, and plastic conduit shall be accepted on Manufacturer's Certificate of Compliance or on catalog cuts.

4. Field Inspection: Verify the materials received on the job site, is in fact the same make, model, lot, batch, size, color, blend, etc. as approved for use, be it by QPL or via the Request for Approval of Material (DOT Form 350-071). Check for Underwriters approval labels. Check for damage to coatings in shipping and handling, and see that damaged areas and field cut threads are protected with an approved coating.

5. Specification Requirements: See *Standard Specifications* Section 9-29.1. Review contract documents to determine if supplemental specifications apply.

9-4.65 Electrical Conductors

1. Approval of Material: Approval of materials is required prior to use. This approval may either be by virtue of the inclusion of this material/product on the Qualified Products List or by approval of a Request for Approval of Material (DOT Form 350-071). If approval is by means of QPL, be certain to verify that product is in fact qualified for its intended use, product is listed under appropriate specification.

2. Preliminary Samples: A preliminary sample of the material will be required only if requested on Request for Approval of Material (DOT Form 350-071). A sample shall consist of 15 feet (5 meters).

3. Acceptance: Conductors shall be accepted upon receipt of "Satisfactory" Test Report from State Materials Laboratory.

a. Single Conductors: If using the QPL, be sure to verify appropriate means of acceptance, see applicable Acceptance Code within the QPL. For wire manufacturers not listed in the QPL, submit a sample. A sample shall be a length of wire that shall include the complete printed/stamped designation: manufacturer, size, and insulation type.

b. Multiple Conductors: If using the QPL, be sure to verify appropriate means of acceptance, see applicable Acceptance Code within the QPL. For wire/cable manufacturers not listed in the QPL, submit a sample. A sample shall be a length of wire that shall include the complete printed/stamped designation: manufacturer, size, and insulation type.

c. Fiber Optic Cable. A sample of the Fiber Optic cables shall be a minimum 2 feet (600 mm) long.

4. Field Inspection: Verify the materials received on the job site, is in fact the same make, model, lot, batch, size, color, blend, etc. as approved for use, be it by QPL or via the Request for Approval of Material (DOT Form 350-071). A visual inspection shall be made to ensure that no conductors with damaged insulation are incorporated into the project.

5. Specification Requirements: See *Standard Specifications* Section 9-29.3. Review Contract Documents to determine if supplemental requirements apply.

9-4.66 Signal, Luminaire, and Strain Poles

1. Approval of Material: Approval of materials is required prior to use. This approval may either be by virtue of the inclusion of this material/product on the Qualified Products List or by approval of a Request for Approval of Material (DOT Form 350-071). If approval is by means of QPL, be certain to verify that product is in fact qualified for its intended use, product is listed under appropriate specification. Notify Materials Fabrication Inspection Office of need to provide Inspection Services.

2. Preliminary Samples: A preliminary sample of the material will be required only if requested on Request for Approval of Material (DOT Form 350-071).

3. Acceptance: If poles were inspected prior to shipment to job site, they will be stamped "APPROVED FOR SHIPMENT" (Figure 9-4). If not, poles must be inspected and approved at the job site by the Materials Fabrication Inspection Office prior to installation. Acceptance will be based on approved shop drawings per Chapter 8-20.2B of this manual, Mill Test Certificates supplied by the manufacturer.

4. Field Inspection: Check for "APPROVED FOR SHIPMENT" stamp (Figure 9-4) and damage due to shipping, handling and erection. Arrange for inspection if not tagged.

5. Specification Requirements: See *Standard Specifications* Section 9-29.6. Review contract documents to determine if supplemental specifications apply.

9-4.67 Anchor Bolts for Luminaire, Signal Poles, and Sign Structures

1. Approval of Material: Approval of materials and fabricator are required prior to use. This approval may either be by virtue of the inclusion of this material/product on the Qualified Products List or by approval of a Request for Approval of Material (DOT Form 350-071). If approval is by means of QPL, be certain to verify that product is in fact qualified for it's intended use, product is listed under appropriate specification. Notify Materials Fabrication Inspection Office of need to provide Inspection Services.

2. Preliminary Samples: A preliminary sample of the material will be required only if requested on Request for Approval of Material (DOT Form 350-071)

3. Acceptance: Acceptance may be based on "APPROVED FOR SHIPMENT" tag and/or stamp (Figure 9-4 or 9-5).

The ID number on the tags that is attached to the bundles of anchor bolts will be stamped on a representative number of anchor bolts.

4. Field Inspection: Check and record the "APPROVED FOR SHIPMENT" tag and/or stamp (Figure 9-4 or 9-5). Check for damage due to shipping and handling.

Note: Special attention shall be placed on the proper installation of bolts. No adjustments (bending) of bolts will be allowed after placement in concrete.

5. Specification Requirements: See *Standard Specifications* Section 9-29.6(5). Review contract documents to determine if supplemental specifications apply.

9-4.68 Luminaires and Lamps

1. Approval of Material: Approval of materials is required prior to use. This approval may either be by virtue of the inclusion of this material/product on the Qualified Products List or by approval of a Request for Approval of Material (DOT Form 350-071). If approval is by means of QPL, be certain to verify that product is in fact qualified for its intended use, product is listed under appropriate specification.

2. Preliminary Samples: Preliminary samples will be required only if requested on Request for Approval of Material (DOT Form 350-071). Submit Manufacturers Certificate of Compliance and catalog cut to the State Materials Laboratory for evaluation if requested.

3. Acceptance: Verify the materials received on the job site, is in fact the same make, model, lot, batch, size, color, blend, etc. as approved for use, be it by QPL or via the Request for Approval of Material (DOT Form 350-071).

4. Field Inspection:

a. Luminaires: A visual inspection shall be made to ensure damaged equipment is not installed and that luminaires are mounted level. Confirm the socket position is the same as that noted on the catalog cut.

b. Lamps for Luminaires and Signal Heads: Check that all lamps are of the proper wattage, see contract documents.

5. Specification Requirements: See *Standard Specifications* Section 9-29.10. Review contract documents to determine if supplemental specifications apply.

9-4.69 Water Distribution System

1. Approval of Material: Approval of material is required prior to use. This approval may either be by virtue of the inclusion of this material/product on the Qualified Products List or by approval of a Request for Approval of Material (DOT Form 350-071). If approval is by means of the QPL, be certain to verify that product is in fact qualified for its intended use, product is listed under appropriate specification. If approval action is being requested via the RAM process, attach Catalog Cuts or other appropriate documents, using proper transmittal, to assist RAM Engineer in the approval process.

2. Preliminary Samples: A preliminary sample of the material will be required only if requested on Request for Approval of Material (DOT Form 350-071).

3. Acceptance: The water distribution material, when approved as noted above, may be accepted in the field by verifying that the materials placed on the job are the same make model, lot, batch, size, color, blend, etc. that was, in fact, approved. In addition, the following: materials will need appropriate documentation and transmittals as noted below.

a. Ductile Iron Pipe - Manufacturer's Certificate of Compliance

b. Steel Pipe (4 inches (100 mm) and under) – Manufacturer's Certificate of Compliance

c. Steel Pipe (6 inches (150 mm) and larger) – Manufacturer's Certificate of Compliance

d. Polyvinyl Chloride (PVC) Pipe (4 inches (100 mm) and over) – Manufacturer's Certificate of Compliance

e. Polyvinyl Chloride (PVC) Pipe (4 inches (100 mm) and under) – Manufacturer's Certificate of Compliance

4. Field Inspection: Verify the materials received on the job site, is in fact the same make, model, lot, batch, size, color, blend, etc. as approved for use, be it by QPL or via the Request for Approval of Material (DOT Form 350-071). Check material delivered to the project for damage to the galvanized coatings in shipping and handling and conformance to the contract documents. See that damaged areas and field cut threads are protected with an approved galvanized repair paint formula, standard formula A-9-73. Water distribution pipe requires testing after installation in conformance with the *Standard Specifications* Section 7-11.3.

5. Specification Requirements: See *Standard Specifications* Section 9-30. Review contract documents to determine if supplemental specifications apply.

9-4.70 Elastomeric Bearing Pads

1. Approval of Material: Approval of material is required prior to use. This approval may either be by virtue of the inclusion of this material/product on the Qualified Products List or by approval of a Request for Approval of Material (DOT Form 350-071).

2. Preliminary Samples: A preliminary sample of the material will be required only if requested on Request for Approval of Material (DOT Form 350-071).

3. Acceptance: Material may be accepted on a Manufacturer's Certificate of Compliance accompanied by a certified test report identifying the specific batch of material and conforming to AASHTO M251.

4. Field Inspection: Make certain that material to be used is from the certified batch.

5. Specification Requirements: See *Standard Specifications* Section 9-31. Review contract documents to determine if supplemental specifications apply.

9-4.71 Fabric Bearings Pad

1. Approval of Material: Approval is required for the fabricator and all material components of the bearings prior to the start of fabrication. For approved plants in Washington State, or the need for inspection, contact the Materials Fabrication Inspection Office.

2. Preliminary Samples: A preliminary sample of the material will be required only if requested on Request for Approval of Material (DOT Form 350-071).

3. Acceptance: All Fabric Bearing Pads need to be inspected prior to installation. If the fabricator is within Washington State, than the bearing pad will be inspected at the fabrication plant and stamped "Approved for Shipment", see Figure 9-4. If the Fabric Bearing Pads are fabricated outside of Washington State, than the bearing pad will need to be inspected on site by the Materials Fabrication Inspection Office.

The Project Engineer shall collect all of the documentation and Test Reports for the various material items used in the Manufacturing of the Fabric Pad Bearing as listed below. Copies of these documents and test reports shall be sent to the Materials Fabrication Inspection Office prior to inspection.

a. Polytetrafluorethylene (TFE) sheeting, fabric pads, and elastomer — Manufacturer's Certificate of Compliance.

b. Steel Plates and shapes including stainless steel — Manufacturer's Certificate of Compliance.

c. TFE and stainless steel coefficient of friction requirements — Certified Test Reports from independent testing laboratory.

d. Sample of preformed fabric pad — "SATISFACTORY" Test Report from the State Materials Laboratory.

4. Field Inspection: Check for damage caused by shipping and handling.

5. Specification Requirements: Review the contract documents to determine the specification requirements.

9-4.72 Precast Concrete Barrier and Wall Panels

1. Approval of Material: Approval of fabricator is required prior to the start of fabrication. This approval may either be by virtue of the inclusion of this material/product on the Qualified Products List or by approval of a Request for Approval of Material (DOT Form 350-071). Notify Fabrication Office of need to provide Inspection Services, or to verify that the precast plants annual review and approval is current for wall panels only.

2. Preliminary Samples: A preliminary sample of the material will be required only if requested on Request for Approval of Material (DOT Form 350-071).

3. Acceptance: Accept only barrier sections that are stamped "WSDOT INSPECTED" (Figure 9-3). Accept only wall panels, which are stamped "APPROVED FOR SHIPMENT" (Figure 9-4).

4. Field Inspection: Check for shipping and handling damage and "APPROVED FOR SHIPMENT" stamp or "WSDOT INSPECTED" stamp.

5. Specification Requirements: See *Standard Specifications* Section 6-10, 6-02.3(25), and 6-02.3(28). Review contract documents to determine if supplemental specifications apply.

9-4.73 Safety Bars, Cattle Guards, Sign Mounting Brackets, Steel and Special Guardrail Posts, Steel Sign Posts

1. Approval of Material: Approval of fabricator is required prior to the start of fabrication. This approval may either be by virtue of the inclusion of this material/product on the Qualified Products List or by approval of a Request for Approval of Material (DOT Form 350-071). If fabrication or welding of the item is needed, contact the Materials Fabrication Inspection Office for disposition and possible inspection.

2. Preliminary Samples: A preliminary sample of the material will be required only if requested on Request for Approval of Material (DOT Form 350-071).

3. Acceptance: Materials may be accepted on receipt of Manufacturer's Certificate of Compliance for the base metal including Mill Test Certificates.

4. Field Inspection: Check each lot of material delivered to the project for damage, and that accompanying Manufacturer's Certificate of Compliance is present. Check galvanizing using procedures stated in FOP for ASTM D 1186. Identify lots with test reports. Check for handling or shipping damage.

5. Specification Requirements: See *Standard Specifications* Section 9-05.18, 9-16.3(2), 9-28.14(2) and Standard Plans. Review contract documents to determine if supplemental specifications apply.

9-4.74 Metal Bridge Rail

1. Approval of Material: Approval of fabricator is required prior to the start of fabrication. This approval may either be by virtue of the inclusion of this material/product on the Qualified Products List or by approval of a Request for Approval of Material (DOT Form 350-071). Notify Fabrication Office of need to provide Inspection Services.

2. Preliminary Samples: A preliminary sample of the material will be required only if requested on Request for Approval of Material (DOT Form 350-071).

3. Acceptance: If rails were inspected prior to shipment to job site, they will be stamped or tagged "APPROVED FOR SHIPMENT" (Figure 9-4 or 9-5). If not, rails must

be inspected on job site by the Materials Fabrication Inspection Office prior to installation. Acceptance will be based on approved shop drawings per Chapter 8-20.2B of this manual, Mill Test Certificates supplied by the manufacturer.

4. Field Inspection: Check for "APPROVED FOR SHIPMENT" tags or stamp. Check for damage caused by shipping and handling. Unless aluminum parts have been adequately wrapped, there may be damage to anodic and lacquer coating. Damaged parts shall be rejected.

5. Specification Requirements: See *Standard Specifications* Section 6-06.3(2). Review contract documents to determine if supplemental specifications apply.

9-4.75 Construction Geotextiles

1. Approval of Material: Approval of materials is required prior to use. This approval may either be by virtue of the inclusion of this material/product on the Qualified Products List or by approval of a Request for Approval of Material (DOT Form 350-071). If approval is by means of QPL, be certain to verify that product is in fact qualified for its intended use, product is listed under appropriate specification.

2. Preliminary Samples: A preliminary sample of the material will be required only if requested on Request for Approval of Material (DOT Form 350-071).

3. Acceptance:

   a. Satisfactory test reports from the State Materials Laboratory when quantities exceed the limits stated in *Standard Specification* Section 9-33.4(4). Sample per WSDOT Test Method 914. A Manufacturer's Certificate of Compliance MUST accompany all samples submitted for testing.

   b. Acceptance may be on Manufacturer's Certificate of Compliance when quantities are within the limits stated in *Standard Specification* Section 9-33.4(4).

4. Field Inspection: Check each roll of geotextile fabric for proper identification as shown on either the Manufacturer's Certificate of Compliance or on the State Materials Laboratory test report. Verify the materials received on the job site, is in fact the same make, model, lot, batch, size, color, blend, etc. as approved for use, be it by QPL or via the Request for Approval of Material (DOT Form 350-071).

5. Specification Requirements: See *Standard Specifications* Sections 9-33. Review contract documents to determine if supplemental specifications apply.

9-4.76 Concrete

1. Approval of Material: Approval of all materials is required prior to use.

   Cement — see Section 9-4.1
   Fine Aggregate (sand) — see Section 9-4.4
   Coarse Aggregate — see Section 9-4.4
   Admixtures for Concrete — see Section 9-4.58
   Water — see Section 9-4.77

Contractor must submit a concrete mix design on DOT Form 350-040. All concrete except commercial and Lean Concrete must come from a pre-qualified Batch Plant. Contact the Regional Materials Engineer to determine if plant is pre-qualified.

For mix designs proposed for cement concrete pavement the contractor is required to submit flexural and compressive strength test results in accordance with Section 5-05 of the *Standard Specifications* as part of the concrete mix design.

Note: If the Aggregate Sources Tacking System requires Alkali Silica Reaction (ASR) mitigation the concrete mix design submittal may include the use of either a low alkali cement per section 9-01.3(3), or fly ash per 9-23.9, as approved by the Engineer. The contractor shall provide test results for ASTM C 1260 or AASHTO T 303 showing the mitigating measures are effective (see Section 9-03 of the *Standard Specifications*). Contact the General Materials Engineer of the State Materials Laboratory or the State Bridge Construction Engineer if the contractor is proposing to use other mitigating measures.

2. Preliminary Samples: Not Required

3. Acceptance:

   a. Commercial and Lean Concrete: Is accepted based on a Certificate of Compliance to be provided by the supplier as described in Section 6-02.3(5) B of the *Standard Specifications*.

   b. Cement Concrete Pavement: Is accepted based on satisfactory field tests for air content and compressive strength (see Section 9-5 of this manual for testing frequency).

   c. Structural Concrete: Is accepted based on tests for Slump, Air Content, Compressive Strength, and Temperature (see *Standard Specifications* Section 6-02.3(5)G for testing frequency).

4. Field Inspection: The concrete mix provided shall match the mix the contractor submitted for review. The Mix design submittal shall include the Aggregate Correction Factor to be used in determining the Air Content, if the contractor fails to provide this information on DOT form 350-040 do not apply an aggregate correction factor.

5. Specification Requirements: See *Standard Specifications* Section 9-03.1, 5-05 and 6-02.

9-4.77 Water for Concrete

1. Approval of Material: Not required.

2. Preliminary Samples: Not required.

3. Acceptance: Is based on test results provided by the contractor. If the Contractor is using potable water that is clear and apparently clean, then no testing is required.

   a. Physical Requirements: conducted on a weekly interval for the first four weeks and thereafter on monthly interval.

   b. Chemical Requirements: conducted on a monthly interval.

4. Field Inspection: See Section 9-4.75 concrete.

5. Specification Requirements: See *Standard Specifications* Section 9-25.1.

9-4.78 Expansion Joints

1. Approval of Material: Approval is required for the fabricator and all material components of the expansion joints prior to the start of fabrication. For approved plants in Washington State, or the need for inspection, contact the Materials Fabrication Inspection Office.

2. Preliminary Samples: A preliminary sample of the material will be required only if requested on Request for Approval of Material (DOT Form 350-071).

3. Acceptance: All expansion joints need to be inspected prior to installation. If the fabricator is within Washington State, than the expansion joints will be inspected at the fabrication plant and stamped "Approved for Shipment", see Figure 9-4. If the expansion joints are fabricated outside of Washington State, than the expansion joints will need to be inspected on site by the Materials Fabrication Inspection Office.

The Project Engineer shall collect all of the documentation from the out of state fabricator for the various material items used in the Manufacturing of the expansion joints as listed below. Copies of these documents shall be sent to the Materials Fabrication Inspection Office prior to inspection.

a. Elastomeric expansion joint strip — Manufacturer's Certificate of Compliance

b. Steel Plates and shapes including — Manufacturer's Certificate of Compliance

c. Coatings for steel parts — Manufacturer's Certificate of Compliance

4. Field Inspection: Check for damage caused by shipping and handling.

5. Specification Requirements: Review contract documents to determine if supplemental specifications apply.

9-4.79 Controller Cabinet Assembly

1. Approval of Material: Approval of all components in the Controller Cabinet Assembly are required. This approval is conditional and may either be by virtue of the inclusion of this material/product on the Qualified Products List or by approval of a Request for Approval of Material (DOT Form 350-071). If approval is by means of QPL, be certain to verify that product is in fact qualified for its intended use, product is listed under appropriate specification.

2. Preliminary Samples: A preliminary sample of the individual components will be required only if requested on Request for Approval of Material (DOT Form 350-071).

3. Acceptance: Final acceptance is based on a satisfactory test report. A satisfactory test report is defined as acceptable performance in the following tests:

WSDOT Test Method 421, Traffic Controller Inspection and Test Procedure

WSDOT Test Method 422, Transient Voltage Test (Spike Test) Procedure

WSDOT Test Method 423, Conflict Monitor Testing

WSDOT Test Method 424, Power Interruption Test Procedure

WSDOT Test Method 425, Environmental Chamber Test

4. Field Inspection: Verify the controller cabinet assembly received on the job site, has satisfactory test reports if required. Check for damage due to shipping and handling.

5. Specification Requirements: See *Standard Specifications* Section 9-29.13. Review contract documents to determine if supplemental specifications apply.

9-4.80 Miscellaneous Temporary Erosion and Sediment Control Items

1. Approval of Material: Approval of all materials is required prior to use. The approval may be by virtue of the inclusion of this material/product on the Qualified Products List or by approval of a Request for Approval of material (DOT Form 350-071). If approval is by means of QPL, be certain to verify the product is, in fact, qualified for it's intended use and the product is listed under the appropriate specification.

2. Preliminary Samples: A preliminary sample of the material will be required only if requested on Request for Approval of Material (DOT Form 350-071).

3. Acceptance: Material will be accepted by visual inspection. The exception to this will be Geotextile for Silt Fence, which will be accepted on basis of Manufacturer's Certificate of Compliance.

4. Field Inspection: Verify that the product used is, in fact, the approved product and document in writing.

5. Specification Requirements: See Standard Specifications Sections 8-01, 9-14, and 9-33.

9-5 Guidelines for Job Site Control of Materials

9-5.1 General

When in doubt as to sampling requirements, refer to Record of Materials, (ROM), Request for Approval of Material, (RAM), and Chapter 9-4 of this manual. All items for acceptance, except for sampling and testing PCC cores, testing concrete cylinder and cement and as shown in Chapter 9-5.7 of this manual will be sampled and tested by the Project Engineers representative.

In some instances, certain items usually sampled by Project Engineers representative may be sampled and tested by representatives of the State Materials Laboratory or other representatives. Such items as shown in Chapter 9-1 of this manual, when properly identified with an "Approved for Shipment" tag, may be accepted for use by the Project Engineer without any further sampling or testing.

9-5.2 Sampling and Testing Schedule

9-5.2A General

The intent of sampling and testing is to ensure that the material provided to the project conforms to the specifications. The frequency schedule in Chapter 9-5.7 of this manual covers the minimum requirements for sampling and testing at the project level. The Project Engineer is responsible for obtaining the number of samples necessary to ensure adequate control of the material being produced under the circumstances and conditions involved with the particular project. In some instances, good construction practice will necessitate more frequent tests to ensure adequate control of the quality of production. This will be the case where production is just getting under way, where source material is variable or marginal in quality. Also operations from commercial sources when small lots of material are being sampled (as for barge loads of aggregate) or when stockpiles are built and depleted may require more frequent sampling and testing.

The instructions listed in Chapter 9-5.7 of this manual, will be followed in the production of those surfacing materials covered therein. A minimum of one acceptance test is required except for small quantities as shown in Chapter 9-5.2C of this manual.

9-5.2B Reducing Frequency of Testing

In instances of uniform production where the material is running well within specification limits, the Project Engineer may initiate deviations from the schedule. Deviations exceeding a 10 percent reduction will require approval from the Construction Materials Engineer at the State Materials Laboratory and must be documented in the project records, and fully explained by the Project Engineer. Lack of personnel, equipment, and facilities will not be considered sufficient reasons for such deviation.

Authority for approval of frequency reduction may be delegated to the Regional Materials Engineer upon request. This authority may permit overall reduction of sampling frequency or selective relief of selected test properties. Examples of selective relief would be reduction/elimination of fracture determinations for production from quarry sources or reduction of frequency for sand equivalent determination. As a general principle, frequency reduction may be considered whenever five consecutive samples taken at the normal frequency indicate full conformance with the specifications.

9-5.2C Sampling and Testing for Small Quantities of Materials

The Project Engineer may elect to accept small quantities of materials without meeting minimum sampling and testing frequencies using the following criteria.

An item can be accepted as a small quantity if the proposed quantity for a specific material is less than the minimum required frequency. For mainline paving, less than one-half the required frequency as defined in Chapter 9-5.7 of this manual.

Materials that will not be considered under the small quantity definition are:

Structural Concrete

Some issues that the Project Engineer may consider prior to use of small quantity acceptance are:

Has the material been previously approved?
Is the material certified?
Do we have a mix design or reference design?
Has it been recently tested with satisfactory results?
Is the material structurally significant?

Small quantity acceptance could be visual, by certification, or other methods. Acceptance of small quantities of materials by these methods must be documented. Documentation of materials under these methods must be provided by the Project Engineer or representative accepting the material. For visual documentation, an entry should be made in the project records as to the basis of acceptance of the material, and the approximate quantity involved.

The small quantity acceptance may be used for any quantity of the following uses:

Curbs and Sidewalks
Driveways
Road approaches
Paved ditches and slopes

9-5.3 Point of Acceptance

State Owned Source: Material produced from State owned source may be accepted either as it is placed into stockpile or as it is placed in hauling vehicles for delivery to the roadway. The sampling and testing frequency during stockpiling shall be in conformance with Chapter 9-5.7 of this manual.

In the event sample testing during stockpiling shows the material to be marginal (i.e., within tolerance limits) in any specification requirement, acceptance at this point shall be conditional and dependent on adherence to specifications at the time of removal from stockpile.

Contractor's Source: If stockpiled material is set aside exclusively for use on WSDOT projects it may be accepted the same as that for a state-owned source. If stockpiles are constructed for general use, then materials for WSDOT projects shall be tested for acceptance from samples taken by the Project Engineer representative in accordance with WSDOT FOP for AASHTO T 2. The Engineer will determine the exact point of acceptance. If an existing stockpile was built without acceptance testing during material production, and later set aside exclusively for use on state projects, the material may be accepted with appropriate test results from samples taken by the Project Engineer representative in accordance with WSDOT FOP for AASHTO T 2. The sampling and testing frequency shall conform to Chapter 9-5.7 of this manual.

9-5.4 Basis for Acceptance

The basis of acceptance of Hot Mix Asphalt and aggregates may be either by statistical evaluation or non-statistical evaluation methods. The method to be used is specified in *Standard Specifications* or Contract Documents.

The testing tolerances shown in Chapter 9-5.6 of this manual apply exclusively to the appropriate specifications as listed in the *Standard Specifications*. These tolerances do not apply to those "special" materials having requirements differing from those listed in the *Standard Specifications*. For these "special", materials usually described in the contract documents, tolerances will be provided by the State Materials Laboratory upon request from the Regional Construction Manager.

Material that has been produced prior to rejection (i.e., ACP in storage silo, crushed materials hauled to the job site) may be incorporated into the project provided the Contractor is made fully aware that the material may be subject to a price adjustment or, in extreme cases, to total removal. Every effort shall be made to place this material in structurally noncritical areas such as shoulders or gore areas.

All material produced between the time of rejection and the time an acceptable material is produced, as defined by WSDOT adopted testing procedures, shall not be incorporated in the work in any manner until it meets specifications.

9-5.4A Basis for Acceptance — Statistical Evaluation

For materials being accepted using statistical evaluation procedures, random samples will be evaluated to determine quality level within a defined tolerance band. Acceptance, bonus, and disincentive procedures are defined in the contract documents.

Test results with acknowledged errors or equipment deficiencies are to be immediately discarded without recourse and another sample run.

Test results for Hot Mix Asphalt may be challenged by the Contractor, as defined in the *Standard Specifications* Section 5-04.3(8)A3C. These specifications allow the Contractor to challenge results of any individual acceptance sample test in writing and within 5 days from receipt of the specified test results.

When the Contractor challenges a test, a split of the original field sample must be tested by different equipment and a different qualified tester. It therefore is necessary that a split of every field sample (i.e., opposite quarter from acceptance test) be saved in a secure area, accurately marked, and be available for challenge sample testing. The specifications require that the challenge sample testing be done in the Regional Materials Laboratory or the State Materials Laboratory. When the Contractor makes a challenge it is expected that the split sample be sent and tested as quickly as possible. This will require that testing of these samples be prioritized. By expediting the challenge sample testing, problems that may exist in testing or with the material being produced can be identified and corrected lessening the impact to both the Contractor and WSDOT.

9-5.4B Basis for Acceptance — Non-Statistical Evaluation

If statistical acceptance procedures are not specified nonstatistical acceptance method will be used.

Individual samples taken for acceptance by this method may be subject to certain tolerances allowed outside the established value stated in the *Standard Specifications*. The tolerance acceptance procedures shall be followed in these cases. Test results with acknowledged errors or equipment deficiencies are to be immediately discarded without recourse and another sample run.

When the test results for Hot Mix Asphalt fall outside the broad band specification limits the material will be evaluated according to the *Standard Specifications* Section 5-04.5(1)A.

The basis for acceptance of paving asphalt is compliance with existing specifications as modified to include the tolerance as follows:

1. If a sample fails to meet the required specifications, the samples prior and subsequent to the failed sample will be tested. Samples of paving asphalt will continue to be tested until samples taken both prior and subsequent to the failing samples meet the specifications. The quantity of out of specification ACP is determined from the tons of ACP represented by each of the paving asphalt samples that failed to meet the specifications.

2. If a sample does not meet the specifications but is not more than 10 percent outside the specification limits and the sample prior and subsequent to the out of specification made both meet the specifications, there will be no price adjustment.

3. If the sample is more than 10 percent out of specification or if the sample is less than 10 percent out of specification and either the sample prior or subsequent to does not meet the specifications, the ACP will be rejected.

The basis for acceptance of other materials is compliance with existing specifications as modified to include tolerances Established in Chapter 9-5.6 of this manual. The application of these tolerances shall be as follows:

1. Take the following actions any time a sample falls outside the specification limits, but within tolerance bands:

   a. Immediately take two separate additional samples representing current production in accordance with Chapter 9-4 of this manual. The contractor has the option of making plant adjustments prior to taking these samples.

   b. Production will be accepted until the second sample is checked for properties that were out of specification in the first sample.

   c. Do not accept any additional material if the second sample is also out of specification.

   d. If the second sample is within specification, immediately check the third sample. Do not accept any additional material if the third sample is out of specification.

e. No further material will be accepted after the time of rejection until corrections are made in the operations. This will be confirmed by new tests within specification limits.

f. Basis for acceptance after this correction will be in conformity with the procedure outlined above. All tests of material outside the specification limits must be listed and justified on the materials certification as required by Chapter 9-1.5 of this manual.

2. The acceptance of material shall cease with one or more of the following conditions:

a. When a sample falls outside of the applicable tolerance bands.

b. When any two out of three consecutive samples are within tolerance bands, but outside specification limits.

c. When any sample has a gradation that falls within both the high and low tolerance bands.

d. Any sample where the material is outside the specification limits, but within the tolerance bands, in any two of the following properties:

Gradation
Fracture
Sand Equivalent

9-5.5 Testing Staff Qualifications and Independent Assurance Program

9-5.5A Testing Staff Qualification

9-5.5A(1) General

WSDOT personnel assigned with testing construction materials will be enrolled in the Construction Tester Qualification Program. The details of this program are contained in this section. This program establishes uniform testing procedures, insures that testing staff is qualified in performing the testing procedures, and provides a regular review. The review process, through inspection by the Region Independent Assurance Inspector (IAI) evaluates the performance of all testing staff, recognizes proficient performance, and improves substandard performance by recommending corrective action. The qualification program extends the State Materials Laboratory accreditation principles. This includes the assignment, management, and review of project level testing using elements of the State Materials Laboratory accreditation program to accommodate an interface with region and, project level materials testing operations and the use and understanding of national standard test procedures such as AASHTO and ASTM, and other test procedures such as WAQTC and WSDOT.

9-5.5A(2) Construction Tester Qualification Rules

1. Responsibility: The construction tester qualification program requires detailed and specific attention to be paid to the testing procedures involved: The State Materials Engineer will address and resolve policy issues related to the qualification program.

2. Qualification Modules: The construction tester qualification modules have been set up in 5 areas of testing that represent most of the acceptance tests performed. The project acceptance testers will be evaluated for their proficiency in one or more of the construction tester qualification modules. Each module has a defined list of test procedures in which proficiency is evaluated, see Section 9-8 of this manual. The modules are listed as follows:

- Aggregates
- Hot-Mix Asphalt
- Structural Concrete
- Embankment and Base Density
- Asphalt Pavement Density

3. Qualification Categories: The tester can be qualified in one or more of three categories. The qualification categories are:

a. Module Qualified Tester: Fully proficient in a testing module, normally works independently with only general supervision and is responsible for determining material compliance.

b. Individual Method Qualified Tester: Has proficiency in one or more test procedures which may partially encompass methods in the qualification modules, but also extends to other infrequent acceptance procedures performed at the project level, and includes tests performed at the Regional or State Materials Laboratories.

c. Interim Qualified Tester: Basically proficient in one or more tests but, limited to an interim period of in training work. Works under the close supervision of a module or individual method qualified tester, refer to Paragraph 5 below.

Testing personnel at the Region may be either Module Qualified, Individual Method Qualified, or Interim Qualified Testers. Per the AASHTO accreditation, the State Materials Laboratory personnel are Individual Method Qualified Testers.

4. Attaining Qualification:

a. Module Qualified Testers: To become a Module Qualified Tester the tester shall satisfactorily complete the required written tests and proficiency evaluations by the IAI, the Region Construction Trainer, or materials staff under the direction of the Materials Engineer in a field or region laboratory for one or more modules in the construction tester qualification program.

b. Individual Method Qualified Testers: To become a Individual Method Qualified Tester the tester shall satisfactorily complete the proficiency evaluation by the IAI, the Region Construction Trainer, or materials staff under the direction of the Materials Engineer. This can be accomplished in a field or region laboratory or State Materials Laboratory. Their qualification records reflect proficiency in the specific individual test methods.

c. Interim Qualified Testers: To become an Interim Qualified Tester, the following conditions have to be met:

(1) Individual study of the written test method(s) for a complete module,

(2) Test demonstration by a proficient tester,

(3) Allowance for practice or trial tests,

(4) Successful completion conforming to testing checklist(s) without coaching, and

(5) The Interim Qualified Tester works under close supervision by a Module or Individual Method Qualified Tester who is qualified in the sametests.

The conditions as described above, leading to interim qualification, may be conducted by another tester currently qualified in the module or test concerned. Based on evaluation of prior experience by the supervisor, with concurrence of the region IAI or Region Construction Trainer, a non-qualified tester may be considered to have the equivalent of conditions 1 through 3 above. An individual will be considered an interim qualified tester when successful testing performance conforming to the checklists has been completed in the presence of another qualified tester.

5. Supervision of Interim Qualified Testers: An Interim Qualified Tester works under the close supervision of a Module or Individual Method Qualified Tester that is qualified in the same test or module containing the test. Close supervision means that the Module or Individual Method Qualified Tester is physically present when the Interim Tester performs the test. The Module or Individual Method Qualified Tester must review and endorse all test results and determinations of material conformance.

6. Criteria for Evaluating Performance: Satisfactory performance constitutes performance conforming to the method checklist or with limited deviations corrected on the spot. Unsatisfactory performance consists of repeated infractions from previous evaluations, or incorrect performance of individual critical items, or of more than one-third of the items on an individual method checklist. Unsatisfactory evaluations shall be subject to region review.

7. Qualification of Evaluating Staff: Staff participating in evaluation of testers for qualification operate under the professional responsibility of the Regional Materials Engineer, and are not themselves required to be qualified testers.

8. Frequency of Equipment Verification: Regional laboratory and field laboratory test equipment will be verified annually, usually during the first quarter of the year, utilizing State Materials Laboratory equipment verification criteria. A tag bearing the year the verification expires will identify verified equipment.

9. Test procedures that are not included in the testing modules, shall be considered infrequently performed test procedures and shall be individual method qualified. For those procedures the Regional Material's Engineer, or his designated representative, will insure that the following process is employed in carrying out the procedure;

a. The employee responsible for performing the test will study the test method, after first determining that the procedure is the applicable current version.

b. The necessary test equipment will be assembled and confirmed as to its suitability and verification if required.

c. The employee will review how to conduct of the test with the supervisor and clarify any questions.

d. The test procedure will be performed in duplicate, using split portions of the test sample if possible. If not, a blank of other similar material will be run in duplicate prior to testing.

e. The results of the duplicate determination will be compared with the expected precision and bias determinations, if any, from the test procedure.

f. Lacking any defined basis of comparison, the results will be reported as the average of the two determinations with both the individual values and the average shown on the test report.

9-5.5A(3) Personnel Qualification Policy

1. All personnel performing acceptance testing will be either Module Qualified, Individual Method Qualified, or Interim Qualified Testers.

2. Module or Individual Method Qualified Tester designated as responsible for the performance of an Interim Qualified Tester must be in close contact, which means that the Module or Individual Method Qualified Tester is physically present when the Interim Tester performs the test. The Module or Individual Method Qualified Tester must review and endorse all test results and determinations of material conformance.

3. The Tester Qualification Tracking System will identify each tester, their specialty, level of qualification, and the results of ongoing evaluations. The IAI shall be the responsible person within the region for the accuracy of the information contained in the Tester Qualification Tracking System.

4. On-the-job performance will be evaluated by the IAI, the Region Construction Trainer, or materials staff under the direction of the Materials Engineer using the qualification checklists. Noted deficiencies will be reported in writing to the tester and his/her supervisor.

5. Supervisor action is required for notations of unsatisfactory performance.

6. The region tester performance review Chapter 9-5.5A(9) will consider continued qualification of individuals noted as deficient in performance. The supervisor shall submit to the Regional Materials Engineer the corrective action taken for unsatisfactory performance.

9-5.5A(4) Laboratory Qualifications Policy

A region or other subordinate laboratory to be considered qualified shall meet the following conditions:

1. Identify all test methods performed on a regular basis. Methods must conform to those established by WSDOT for materials acceptance.

2. Annually, verify laboratory and field test equipment, using State Materials Laboratory equipment verification criteria. An attached tag will identify the verified equipment.

3. Maintain staff qualification for all methods performed in the laboratory. Qualification shall be either by Module Qualified Tester or Individual Method Qualified tester.

4. Respond to the findings of the review program by the State Materials Laboratory staff, modeled on AASHTO Materials Reference Laboratory (AMRL) inspection program. Such reviews shall be conducted at least biennially.

5. With approval of the State Materials Engineer, a non-WSDOT contracting laboratories having an equipment calibration/verification policy, and a technician training and evaluation process meeting the requirements of AASHTO R-18 may be used to conduct acceptance testing. Documentation of equipment calibration/verification and tester qualification shall be maintained and available for review by the Contracting Agency upon request. The Contracting Agency may conduct an on site review of the laboratory facilities, witness the tester performing the tests, verify the testing equipment, and review records when deemed necessary.

9-5.5A(5) Construction Tester Qualification Program

1. Qualifications:

   a. Module Qualified Tester: Qualification in a module will require satisfactory completion of a written exam, followed by hands-on performance of testing procedures. Written examinations require an overall score of 70 percent, with not less than 60 percent on each method for satisfactory completion. Performance examination requires satisfactory performance in the presence of the Independent Assurance Inspectors, the Construction Trainers, or materials staff of all checklist steps, in sequential order, in each required method.

   b. Individual Method Qualified Tester: Qualification in an individual method requires satisfactory completion of hands on performance of the testing procedures in the presence of the Independent Assurance Inspectors, the Construction Trainers, or materials staff. Performance examination requires satisfactory performance of all checklist steps, in sequential order.

   c. Interim Qualified Tester: Qualification as an Interim Qualified Tester requires satisfactory completion of hands-on performance of the testing procedures in the presence of a qualified tester that is qualified in the same test or module containing the test. Performance examination requires satisfactory performance of all checklist steps, in sequential order.

2. Equivalent programs, i.e., American Concrete Institute (ACI) Certification, may be accepted for qualification where feasible. The State Materials Engineer will determine acceptance of alternate programs.

3. Qualification examinations will be administered by Region IAI supported by Regional Construction Trainers and Regional laboratory supervisors.

4. Performance qualification will be determined from correct performance of all steps, in sequence, based on testing checklists derived from WSDOT adopted test methods as listed in the Materials Manual

5. Failure of a qualification examination will allow for reexamination after a 3 day minimum period of preparation for retest.

6. Repeated failures will be referred to the candidate's supervisor for regional performance review.

7. Tester will continue to be qualified under the following conditions:

   a. All unsatisfactory evaluations are resolved within 30 days.

   b. The IAI evaluates the Tester any time during the next calendar year (January to December).

   c. Testers that missed an annual demonstration of proficiency, may be allowed to do acceptance testing for a 30-day period, if requested by the Project Engineer and approved by the IAI. An evaluation and checklist review by the IAI, the Region Construction Trainer, or materials staff under the direction of the Materials Engineer must be conducted within this 30-day period.

   d. Any tester missing two consecutive yearly annual evaluations, will be required to retake the written test and achieved a satisfactory IAI performance evaluations.

9-5.5A(6) Regional Materials Laboratory Responsibilities

The Regional Materials laboratories will:

1. Examine and qualify testers using the Independent Assurance Inspectors, the Region Construction Trainers, or regional materials staff as a primary resource.

2. Annually, verify regional laboratory and field laboratory test equipment, using State Materials Laboratory equipment verification criteria. A tag will identify the verified equipment.

3. Maintain staff qualification for all methods performed in the Regional Materials Laboratory. Qualification shall be either by Module Qualified or Individual Method Qualified

4. Insure that the IAI will be the responsible person within the region for the accuracy of the information contained in the Tester Qualification Tracking System.

5. Respond to the findings of the review program by the State Materials Laboratory Staff.

6. Perform testing of independent assurance samples and comparison samples using qualified staff and verified equipment, if the region has a qualified laboratory.

7. Support the Construction Tester Training Program for their region or in cooperation with other regions by providing training facilities.

8. Support of construction program testing including: density cores, nuclear gauge correlation and management, concrete 28-day cylinders (acceptance), density standards (Proctor and maximum density), and as needed, asphalt concrete ignition furnace calibration.

9-5.5A(7) Project Engineer Responsibilities

The Project Engineer will:

1. Ensure that all personnel assigned the responsibility for testing materials are Module Qualified Testers, Individual Method Qualified Tester, or Interim Qualified Testers who work under close supervision of a Qualified Tester.

2. Provide an opportunity for on-the-job training, and/or mentoring of Interim Qualified Testers prior to assigning testing responsibilities.

3. Take corrective actions for unsatisfactory evaluations of Qualified Testers.

4. Advise the Regional Independent Assurance Inspector of changes in assigned testers, new testers needing qualification testing, and of follow up corrective actions.

9-5.5A(8) The State Materials Laboratory Responsibilities

The State Materials Laboratory will:

1. Attain and maintain AASHTO Accreditation of the Materials Quality System responding to the AASHTO Accreditation Program. The Materials Quality System shall include all test methods performed at the State Materials Laboratory.

2. Assist the Regional Materials Laboratories by providing standards and procedures derived from the Materials Quality System Manual for direct application to corresponding procedures in the Regional Laboratories.

3. Maintain testing standards and procedures in conformance with WSDOT, AASHTO, ASTM, and WAQTC.

4. As the departmental laboratory qualification authority, periodically review the performance and records of region and other subordinate laboratories for consistent practices in testing, equipment verification, and staff qualification.

5. Maintain examinations and checklists used to qualify all WSDOT testing personnel.

6. Provide oversight and coordination for establishment and revision of the qualification programs. Creation and revision of qualification program modules will be by a cross functional work group.

7. Maintain Tester Qualification Tracking System computer program.

8. Provide guidance and prepare summary for annual report of Independent Assurance (IA) System performance.

9-5.5A(9) Tester Performance Review

1. The IAI, the Region Construction Trainer, or materials staff under the direction of the Materials Engineer reviews performance of all Module qualified, Individual Method Qualified, and interim qualified testers as provided under the IA process.

2. Such reviews are documented in the form of checklists reflecting the degree of conformance to the test procedure. Copies of the review are provided to the tester and to the tester's supervisor (normally the Project Engineer) at the conclusion of the review.

3. Remarks may be included to reflect commendable performance, attention to detail, cooperative attitude, or other performance beyond the expected norm. Satisfactory reports affirm tester proficiency, attest to proper operation of the materials acceptance process.

4. Expected satisfactory performance is that all steps of the checklist be performed correctly. However, incidences of single to several errors as isolated, first-time occurrences, which are acknowledged and corrected by on the spot, discussion with the IAI, also constitute satisfactory performance. (***Note:*** Some procedures may have single steps of such criticality that their omission reflects unsatisfactory performance.)

5. Unsatisfactory performance constitutes repeated occurrences of previous on-the-spot corrections, incorrect performance of critical steps, or incorrect performance of over one-third of the checklist task steps. IAIs may also assign unsatisfactory performance based on observed falsification of test reports, violations of safety, hazardous materials or nuclear materials security standards, or failure to provide proper care of equipment. The Regional Materials Engineer shall promptly review all unsatisfactory performance reports.

6. Reports alleging improper performance of test procedures, may be originated by other parties to a construction contract such as contractors, subcontractors or suppliers. Such allegations must he submitted in writing, to the Project Engineer for review. Allegations must identify the specific test procedure and alleged omissions or commissions and contain the name and signature of the individual making the allegation. These reports will be investigated.

9-5.5A(10) Review Actions for Unsatisfactory Performance

1. The tester's supervisor is expected to review and act on all unsatisfactory performance reports.

2. For unsatisfactory performance, the Regional Materials Engineer will work with the Project Engineer for proposed corrective action. Mutual agreement on corrective action shall be documented by attachment to the performance report.

3. Unresolved reports shall be referred to the Regional Construction Manager.

4. Review of substandard performance shall afford the tester involved the opportunity for a personal appearance. In the case of written allegations of misconduct, the individual making the allegation shall also have the opportunity to appear. The Regional Construction Manager shall review recommendation for corrective action. All findings related to allegations of misconduct shall be made in writing by the Regional Construction Manager.

9-5.5B Independent Assurance (IA) Program

9-5.5B(1) General

The IA Program, through a combination of sampling and observation, is intended to determine the conformance of sampling and testing to the defined procedures. The Independent Assurance process is intended to verify procedures, confirm equipment verification, and, in some instances, obtain split samples (Independent Assurance Samples) for independent testing. These samples do not reflect on the specification conformance of the materials involved. IA evaluation will be on a system basis, focused on individuals testing activity rather than being project based on a sample frequency and materials quantity basis.

9-5.5B(2) Independent Assurance Inspector (IAI)

The Regional Construction Manager should assign a sufficient number of persons in each region to handle the program for independent assurance sampling, testing, and annual tester evaluation reviews. These IAIs should be under the direction of the Regional Materials Engineer and should be well trained and experienced in all phases of the work.

It will be the duty of the IAI to conduct the IA Program in accordance with the requirements of WSDOT. The IA program requires the evaluation of all materials testers, observation of the techniques used to run the field tests, determination of the verification status and condition of testing equipment in use, and procurement of appropriate Independent Assurance Samples. The IAI's should exercise tact and good judgment in securing maximum cooperation on the part of the testers and other project personnel. IAI's will conduct the examination process under the Construction Tester Qualification Program.

The Tester Qualification Tracking System will identify each tester, their specialty, level of qualification, and the results of ongoing evaluations. The IAI shall be the responsible person within the region for the accuracy of the information contained in the Tester Qualification Tracking System.

The IAI may normally have other materials related functions to perform in addition to the IA functions. Typically, these may include:

1. Conducting initial training to establish interim qualification.

2. Mentoring interim or newly qualified testers to enhance efficiency and confidence.

3. Assisting in or conducting testing and inspection training in concert with the Regional Construction Trainer.

4. Reviewing materials, test-related records, and forms.

5. Radiation Safety Officer

6. Inspection and Certification of Asphalt and Concrete production facilities.

9-5.5B(3) Independent Assurance Evaluations

It is essential that the IAI evaluate all project and region materials testers, observe the techniques of running the field tests, ascertain the verification status of testing equipment in use, and obtain the appropriate Independent Assurance Samples.

The frequency of Independent Assurance Inspections is managed by the IAI's. On-site evaluation by the IAI will be conducted at least once per calendar year, per module or test. The on-site evaluation will accrue the calendar year following qualification or requalification. The on-site evaluation shall include evaluation in all test methods in the applicable qualification module, or the individual method qualified tests. Tests included in a module but not evaluated on a project may be evaluated off-site, such as at the region laboratory. Additional visits are recommended based on the activity level of the individual tester. Further, additional evaluations may be required for follow up of deficient performance or for monitoring activities of Interim Qualified Testers.

Observations of performance and split sampling will be performed for hot mix asphalt and aggregate testing. Only observations of performance are required for testing of Portland cement concrete and for density testing.

Independent Assurance observations and evaluations will follow the Tester Qualification Checklists for theprocedures involved. A copy of these checklists and observations will be provided to the Project Engineer. Each observation will be cataloged to the tester that is observed, to maintain an ongoing account of his/her performance. A complete record should be made of the evaluation and sampling performed during this inspection, the personnel contacted, the testing equipment observed, and the suggestions or on-the-spot corrections that were left with job personnel. Observations other than test performance related to checklists are not normally considered in the evaluation of the individual tester, but may require action by management involved.

At the time of the Independent Assurance Inspection, where samples are required, the IAI will observe the initial sampling and participate in the sample splitting activity to ensure that an accurate split is obtained. The field split will then be tested, under observation. The split portion will be returned to the Regional Materials Laboratory and tested for comparison of results.

Additional separate comparison samples may be split by the field tester and forwarded to the Regional Materials Laboratory as initiated by the field tester or when directed by the IAI as follow up for observed deficient performance. This sample will be carefully split, identified as "Comparison Sample," show the tester's identity, and be forwarded to the Regional Materials Laboratory accompanied by the field test results.

All testing equipment involved will be examined for the presence of the required Region verification tags current for the present calendar year. In addition, evaluation of the condition of the equipment items is advised for determination of in service wear or damage.

9-5.5B(4) Evaluation of Independent Assurance Samples Testing

The companion tests of Independent Assurance Samples will be performed employing another qualified operator and set of verified testing equipment than that used for the field (acceptance) test results. When acceptance testing is performed at the Regional Materials Laboratory, the operators should be under the same degree of Independent Assurance oversight as for acceptance sampling performed in the field.

9-5.5B(5) Comparison of Independent Assurance and Acceptance Test Results

Independent Assurance results or comparison results will be compared with the acceptance results. Reports of the comparison of results will be provided to the Project Engineer and the Region IAI. Comments reflecting the degree of conformance will be entered in the remarks section of the report by the Regional Materials Engineer. The degree of conformance will be determined according to the deviation ranges noted below. Gradation test results will be compared only on specification screens.

Test	Normal Range of Deviation	Maximum Range of Deviation
Sand Equivalent	± 8 points	± 15 points
Fracture	± 5 percent	± 10 percent
Asphalt Content (ACP&ATB)	± 0.3 percent	± 0.6 percent
Sieve Analysis — All Items:		
No. 4 (4.75 mm) sieve and larger	± 5 percent	± 8 percent
No. 6 (3.35 mm) sieve to No. 80 (0.180 mm) sieve	± 3 percent	± 6 percent
No. 100 (0.150 mm) sieve to No. 200 (0.075 mm) sieve	± 2 percent	± 4 percent

In the table above, "Normal Range" indicates an acceptable range of variation between test results and no action is required. Test results that fall in this category will be so indicated by the wording *"normal deviation"* on the independent assurance test reports.

Test results falling outside of the "Normal Range" but within the "Maximum Range," will be indicated by the wording *"questionable deviation"* on the independent assurance test reports. For deviations falling into this category, the Project Engineer or a representative shall review the original test report form, advise the responsible test operator of the deviation, and review the test procedure at the next opportunity. The IAI will take the same actions relative to the test operator in the region laboratory.

Test results exceeding the maximum range will be indicated by the wording *"excessive deviation."* For deviations falling in the excessive category, the Project Engineer or a representative will notify the IAI and/or Region Construction Trainer for their services in corrective action. Corrective action involving both the field tester and the region laboratory tester will include review of sampling procedures, sample splitting procedures, testing procedures, and testing equipment.

The Project Engineer will document actions and results of these investigations by a notation or attachment to the independent assurance sample test report. The Independent Assurance Inspector shall document the actions and results of these investigations on the individual's checklist evaluation with notations as to his/her findings in reviewing region lab procedures. Lacking any other actions, these results shall be considered in scheduling repeat evaluations of a tester and entered into the individual's qualification record. These may include comments or findings by the Region Construction Trainer.

The focus of Independent Assurance sampling is based on individual tester's activity and is not intended to provide independent assurance sample reports on all projects or on all materials on any particular project.

9-5.6 Tolerance Limits

Crushed Coverstone

English	Metric	Specification Limits	Tolerance Limits
% Passing $^3/_4''$	% Passing 19.0 mm	100	95-100
% Passing $^5/_8''$	% Passing 16.0 mm	95-100	90-100
% Passing No. 4	% Passing 4.75 mm	20-45	16-49
% Passing No. 200	% Passing 0.075 mm	0-7.5	0-9.0
Sand Equivalent	Sand Equivalent	32 Min.	27 Min.
Fracture	Fracture	75% Min.	70% Min.

Crushed Screenings $^3/_4''$ — $^1/_2''$ (19.0 mm — 12.5 mm) for B.S.T.

English	Metric	Specification Limits	Tolerance Limits
% Passing 1″	% Passing 25.0 mm	100	95-100
% Passing $^3/_4''$	% Passing 19.0 mm	95-100	90-100
% Passing $^1/_2''$	% Passing 12.5 mm	0-20	0-25
% Passing $^3/_8''$	% Passing 9.50 mm	0-5	0-10
% Passing No. 200	% Passing 0.075 mm	0-1.0	0-2.0
Fracture	Fracture	75% Min.	70% Min.

Crushed Screenings $^5/_8''$ — No. 4 (16.0 mm — 4.75 mm) or B.S.T.

English	Metric	Specification Limits	Tolerance Limits
% Passing $^3/_4''$	% Passing 19.0 mm	100	95-100
% Passing $^5/_8''$	% Passing 16.0 mm	95-100	90-100
% Passing No. 4	% Passing 4.75 mm	0-10	0-15
% Passing No. 10	% Passing 2.00 mm	0-3	0-7
% Passing No. 200	% Passing 0.075 mm	0-1.0	0-2.0
Fracture	Fracture	75% Min.	70% min.

Crushed Screenings $^1/_2''$ — No. 4 (12.5 mm — 4.75 mm) or B.S.T.

English	Metric	Specification Limits	Tolerance Limits
% Passing $^5/_8''$	% Passing 16.0 mm	100	95-100
% Passing $^1/_2''$	% Passing 12.5 mm	95-100	90-100
% Passing No. 4	% Passing 4.75 mm	0-15	0-20
% Passing No. 10	% Passing 2.00 mm	0-3	0-7
% Passing No. 200	% Passing 0.075 mm	0-1.0	0-2.0
Fracture	Fracture	75% Min.	70% Min

Crushed Screening $^3/_8''$ — No. 10 (9. 50 mm — 2.00 mm)

English	Metric	Specification Limits	Tolerance Limits
% Passing $^1/_2''$	% Passing 12.5 mm	100	95-100
% Passing $^3/_8''$	% Passing 9.50 mm	90-100	85-100
% Passing No. 4	% Passing 4.75	30-56	25-61
% Passing No. 10	% Passing 2.00 mm	0-10	0-12
% Passing No. 200	% Passing 0.075 mm	0-1.0	0-2.0
Fracture	Fracture	75% Min.	70% Min.

Crushed Screenings No. 4 — 0″ (4.75 mm — 0 mm) for B.S.T.

English	Metric	Specification Limits	Tolerance Limits
% Passing $^3/_8''$	% Passing 9.50 mm	100	95-100
% Passing No. 4	% Passing 4.75 mm	76-100	71-100
% Passing No. 10	% Passing 2.00 mm	30-60	26-64
% Passing No. 200	% Passing 0.075 mm	0-10.0	0-11.0
Fracture	Fracture	75% Min.	70% Min.

Ballast

English	Metric	Specification Limits	Tolerance Limits
% Passing $2^1/_2''$	% Passing 63 mm	100	100
% Passing 2″	% Passing 50.0 mm	65-100	60-100
% Passing 1″	% Passing 25.0 mm	50-85	45-90
% Passing No. 4	% Passing 4.75 mm	26-44	21-49
% Passing No. 40	% Passing 0.425 mm	16 Max.	20 Max.
% Passing No. 200	% Passing 0.075 mm	9.0 Max.	10.0 Max.
Sand Equivalent	Sand Equivalent	27 Min.	22 Min.
Dust Ratio	Dust Ratio	2/3 Max.	

Shoulder Ballast

English	Metric	Specification Limits	Tolerance Limits
% Passing $2^1/_2''$	% Passing 63 mm	100	100
% Passing 2″	% Passing 50.0 mm	65-100	60-100
% Passing $^3/_4''$	% Passing 19.0 mm	40-80	35-85
% Passing No. 4	% Passing 4.75 mm	0-5	0-6
% Passing No. 100	% Passing 0.150 mm	0-2.0	0-2.9
Fracture	Fracture	75% Min.	70% Min.

Crushed Surfacing Base Course

English	Metric	Specification Limits	Tolerance Limits
% Passing $1^1/_4''$	% Passing 31.5 mm	100	95-100
% Passing 1″	% Passing 25.0 mm	80-100	75-100
% Passing $^5/_8''$	% Passing 16.0 mm	50-80	45-85
% Passing No. 4	% Passing 4.75 mm	25-45	20-50
% Passing No. 40	% Passing 0.425 mm	3-18	3-20
% Passing No. 200	% Passing 0.075 mm	7.5 Max.	9.0 Max.
Sand Equivalent	Sand Equivalent	32 Min.	27 Min.
Fracture	Fracture	75% Min.	70% Min.

Crushed Surfacing Top Course

English	Metric	Specification Limits	Tolerance Limits
% Passing $^3/_4''$	% Passing 19.0 mm	100	95-100
% Passing $^1/_2''$	% Passing 12.5 mm	80-100	75-100
% Passing No. 4	% Passing 4.75 mm	46-66	41-71
% Passing No. 40	% Passing 0.425 mm	8-24	5-27
% Passing No. 200	% Passing 0.075 mm	10.0 Max.	11.0 Max.
Sand Equivalent	Sand Equivalent	32 Min.	27 Min.
Fracture	Fracture	75% Min.	70% Min.

Maintenance Rock

English	Metric	Specification Limits	Tolerance Limits
% Passing $^5/_8''$	% Passing 16.0 mm	100	95-100
% Passing $^1/_2''$	% Passing 12.5 mm	90-100	85-100
% Passing No. 4	% Passing 4.75 mm	45-66	40-71
% Passing No. 40	% Passing 0.425 mm	10-25	8-30
% Passing No. 200	% Passing 0.075 mm	7.0 Max.	8.0 Max.
Sand Equivalent	Sand Equivalent	32 Min.	27 Min.
Fracture	Fracture	75% Min.	70% Min.

Gravel Base

English	Metric	Specification Limits	Tolerance Limits
% Passing 2″	% Passing 50.0 mm	75-100	70-100
% Passing No. 4	% Passing 4.75 mm	22-100	17-100
% Passing No. 200	% Passing 0.075 mm	10.0 Max.	11.0 Max.
Sand Equivalent	Sand Equivalent	27 Min.	22 Min.
Dust Ratio	Dust Ratio	2/3 Max.	

Gravel Backfill for Walls

English	Metric	Specification Limits	Tolerance Limits
% Passing 4″	% Passing 100 mm	100	100
% Passing 2″	% Passing 50.0 mm	75-100	70-100
% Passing No. 4	% Passing 4.75 mm	22-66	17-71
% Passing No. 200	% Passing 0.075 mm	5.0 Max.	6.0 Max.
Sand Equivalent	Sand Equivalent	52 Min.	47 Min.
Dust Ratio	Dust Ratio	2/3 Max.	

Gravel Backfill for Pipe Zone Bedding

English	Metric	Specification Limits	Tolerance Limits
% Passing $1^1/_2$″	% Passing 37.5 mm	100	100
% Passing 1″	% Passing 25.0 mm	75-100	70-100
% Passing $^5/_8$″	% Passing 16.0 mm	50-100	45-100
% Passing No. 4	% Passing 4.75 mm	20-80	15-85
% Passing No. 40	% Passing 0.425 mm	3-24	2-29
% Passing No. 200	% Passing 0.075 mm	10.0 Max.	11.0 Max.
Sand Equivalent	Sand Equivalent	27 Min.	22 Min.

Gravel Backfill for Drains

English	Metric	Specification Limits	Tolerance Limits
% Passing 1″	% Passing 25.0 mm	100	95-100
% Passing $^3/_4$″	% Passing 19.0 mm	80-100	75-100
% Passing $^3/_8$″	% Passing 9.50 mm	10-40	8-45
% Passing No. 4	% Passing 4.75 mm	0-4	0-5
% Passing No. 200	% Passing 0.075 mm	0-2	0-2.5

Gravel Backfill for Drywells

English	Metric Limits	Specification Limits	Tolerance
% Passing $1^1/_2$″	% Passing 37.5 mm	100	95-100
% Passing 1″	% Passing 25.0 mm	80-100	75-100
% Passing $^3/_4$″	% Passing 19.0 mm	0-20	0-25
% Passing $^3/_8$″	% Passing 9.50 mm	0-2	0-3
% Passing No. 200	% Passing 0.075 mm	0-1.5	0-2.0

Backfill for Sand Drains

English	Metric	Specification Limits	Tolerance Limits
% Passing $^1/_2$″	% Passing 12.5 mm	90-100	85-100
% Passing No. 4	% Passing 4.75 mm	57-100	52-100
% Passing No. 10	% Passing 2.00 mm	40-100	35-100
% Passing No. 50	% Passing 0.30 mm	3-30	2-35
% Passing No. 100	% Passing 0.150 mm	0-4	0-5
% Passing No. 200	% Passing 0.075 mm	0-3.0	0-3.9

Sand Drainage Blanket

English	Metric	Specification Limits	Tolerance Limits
% Passing $2^1/_2''$	% Passing 63 mm	90-100	85-100
% Passing No. 4	% Passing 4.75 mm	24-100	18-100
% Passing No. 10	% Passing 2.00 mm	14-100	9-100
% Passing No. 50	% Passing 0.30 mm	0-30	0-35
% Passing No. 100	% Passing 0.150 mm	0-7	0-8
% Passing No. 200	% Passing 0.075 mm	0-3.0	0-3.9

Gravel Borrow

English	Metric	Specification Limits	Tolerance Limits
% Passing 4″	% Passing 100 mm	100	95-100
% Passing 2″	% Passing 50.0 mm	75-100	70-100
% Passing No. 4	% Passing 4.75 mm	50-80	45-85
% Passing No. 40	% Passing 0.425 mm	30 Max.	33 Max.
% Passing No. 200	% Passing 0.075 mm	7.0 Max.	9.0 Max.
Sand Equivalent	Sand Equivalent	42 Min.	37 Min.

Select Borrow

English	Metric	Specification Limits	Tolerance Limits
% Passing 6″	% Passing 150 mm	100	95-100
% Passing 3″	% Passing 75.0 mm	75-100	70-100
% Passing No. 40	% Passing 0.425 mm	50 Max.	55 Max.
% Passing No. 200	% Passing 0.075 mm	10.0 Max.	12.0 Max.
Sand Equivalent	Sand Equivalent	22 Min.	19 Min.

Foundation Material Class A

English	Metric Limits	Specification Limits	Tolerance
% Passing $2^1/_2''$	% Passing 63 mm	98-100	93-100
% Passing 2″	% Passing 50.0 mm	92-100	87-100
% Passing $1^1/_2''$	% Passing 37.5 mm	72-87	67-92
% Passing $1^1/_4''$	% Passing 31.5 mm	58-75	53-80
% Passing $^3/_4''$	% Passing 19.0 mm	27-47	22-52
% Passing $^3/_8''$	% Passing 9.50 mm	3-14	2-16
% Passing No. 4	% Passing 4.75 mm	0-1	0-2

Foundation Material Class B

English	Metric	Specification Limits	Tolerance Limits
% Passing $2^1/_2''$	% Passing 63 mm	95-100	90-100
% Passing 2″	% Passing 50.0 mm	75-100	70-100
% Passing $1^1/_2''$	% Passing 37.5 mm	30-60	25-65
% Passing $1^1/_4''$	% Passing 31.5 mm	0-15	0-17
% Passing $^3/_4''$	% Passing 19.0 mm	0-1	0-2

Asphalt Materials — Paving Asphalt

English/Metric	Specification Limits	Tolerance Limits
Performance Grade (PG)	AASHTO M320	± 10% of spec

9-5.7 Acceptance Sampling and Testing Frequency Guide

Item	Test	English Acceptance Sample	Metric Acceptance Sample
Gravel Borrow	Grading & SE	1 – 4000 Ton	4000 Tonnes
Select Borrow	Grading & SE	1 – 4000 Ton	4000 Tonnes
Sand Drainage Blanket	Grading	1 – 4000 Ton	4000 Tonnes
Gravel Base	Grading, SE & Dust Ratio	1 – 4000 Ton	4000 Tonnes
CSTC	Grading, SE & Fracture	1 – 2000 Ton	2000 Tonnes
CSBC	Grading, SE & Fracture	1 – 2000 Ton	2000 Tonnes
Maintenance Rock	Grading, SE & Fracture	1 – 2000 Ton	2000 Tonnes
Ballast	Grading, SE & Dust Ratio	1 – 2000 Ton	2000 Tonnes
Shoulder Ballast	Grading & Fracture	1 – 2000 Ton	2000 Tonnes
Backfill for Sand Drains	Grading	1 – 2000 Ton	2000 Tonnes
Crushed Covers e	Grading, SE & Fracture	1 – 1000 Ton	1000 Tonnes
Crushed Screening			
$^5/_8$ – No. 4 (16.0 – 4.75 mm)	Grading & Fracture	1 – 1000 Ton	1000 Tonnes
$^1/_2$ – No. 4 (12.0 – 4.75 mm)	Grading & Fracture	1 – 1000 Ton	1000 Tonnes
No. 4 – 0 (4.75 – 0 mm)	Grading & Fracture	1 – 1000 Ton	1000 Tonnes
Gravel Backfill For			
Foundations	Grading & SE	1 – 1000 Ton	1000 Tonnes
Walls	Grading, SE & Dust Ratio	1 – 1000 Ton	1000 Tonnes
Pipe Zone Bedding	Grading & SE	1 – 1000 Ton	1000 Tonnes
Drains	Grading	1 – 100 Ton	100 Tonnes
PCC Paving			
Coarse Aggregate	Grading	1 – 2000 Ton	2000 Tonnes
Fine Aggregate	Grading	1 – 2000 Ton	2000 Tonnes
Air Content	Air	1 – 500 CY	400 m3
Cylinders (28-day)	Compressive Strength	1 – 500 CY	400 m3
Core	Density	1 – 500 CY	400 m3
	Thickness	1 – 500 CY	400 m3
Cement See Note 5	Chemical & Physical Certification		
PCC Structures			
Coarse Aggregate	Grading	1 – 1000 Ton	1000 Tonnes
Fine Aggregate	Grading	1 – 1000 Ton	1000 Tonnes
Consistency	Slump	1 – 50 CY	40 m^3
Air Content	Air	1 – 50 CY	40 m^3
Cylinders (28-day)	Compressive Strength	1 – 50 CY	40 m^3
Cement See Note 5	Chemical & Physical Certification		
Asphalt Concrete Pavement			
Completed Mix, See Note 3 and 4			
	Grading & Asphalt Content	1 – 800 Ton	800 Tonnes
	Compaction	5 – 400 Ton	400 Tonnes
Open Graded, See Note 3 Class D and D Mod.	Grading (Agg. from cold feed)	1 – 800 Ton	800 Tonnes
Item	**Test**	**English Acceptance Sample**	**Metric Acceptance Sample**
Asphalt Concrete Aggregate			
Aggregate (from cold feed)	SE & Fracture, See Note 3	1 – 1600 Ton	1600 Tonnes
Coarse Aggregate (in stockpile) See Note 1	Grading, SE, & Fracture	1 – 1000 Ton	1000 Tonnes
Fine Aggregate	Grading, SE, & Fracture	1 – 1000 Ton	1000 Tonnes

(in stockpile) See Note 1			
Blend Sand (in stockpile)	SE	1 – 1000 Ton	1000 Tonnes
Mineral Filler	Sp. G & Pl	Certificate	Certificate
Asphalt Treated Base			
Aggregate	Grading See Note 1 & SE	1 – 1000 Ton	1000 Tonnes
Completed Mix			
See Note 4	Grading & Asphalt	1 – 1000 Ton	1000 Tonnes
	Compaction, See Note 2	5 – Control Lot	5 – Control Lot
Asphalt Materials		Certification	Certification
Paving Asphalt (AR, AC, PBA, PG)	Verification:	2-1 quart	2-1 liter
		every other mix acceptance sample, see Note 6	
liquid Asphalt (Cutback, Emulsion)	Verification:	2-1 quart	2-1 liter
		every other shipment	
Emulsion for ACP Tack Coat	Verification:	None required	
Rubberized Asphalt	Verification:	2-1 quart	2-1 liter
		every other mix acceptance sample	
Compaction			
Embankment		1 – 2500 CY	2000 M^3
Cut Section		1 – 500 LF	150 M
Surfacing		1 – 1,000 LF (per layer)	300 M (per layer)
Backfill		1 – 500 CY	400 M^3

Note 1 Tests for grading will be performed only when aggregates are being produced and stockpiled for use on a future project.

Note 2 A control lot shall be a normal days production.

Note 3 For projects under statistical acceptance, the sample frequency shall be as prescribed in the contract and the sublot size may vary from 500 to 800 ton depending on the project quantities. For projects under nonstatistical acceptance, the sublot size may vary from 400 to 800 ton tonnes with a minimum of one sublot per day when the daily production is less than 400 ton

Note 4 Mix design conformation samples shall be submitted to the State Materials Laboratory Bituminous Concrete Section. For all projects, submit one sample per day from the first five days of production for each plant and one sample every fifth day of production there after. The conformation samples should be taken in conjunction with and be a representative quarter of the acceptance samples taken for the project as described in WSDOT Test Method 712. If no acceptance sample is required for any day of production no conformation sample will be required either.

Note 5 Cement may be accepted by the Engineer based on the Manufacturer's Mill Test Report number indicating full conformance to the Specifications. The Engineer has the option of taking samples at the job site for submission to the State Materials Laboratory for testing.

Note 6 The first sample of paving asphalt will be taken with the second asphalt concrete pavement (ACP) mix sample. For nonstatistical of asphalt concrete pavement, take one sample for every 1,600 tons of mixture.

Each nuclear density gauge will be supplied in the manufacture's shipping container with an adequate latch. While transporting and when storing the nuclear density gauge, it must be secured with a minimum of 3 locks. At all times, the key for the lock will

9-6 Radioactive Testing Devices

9-6.1 Administration and Safety

The purpose of this chapter is to provide a guide for personnel using, and administering the use of, nuclear density gauges. The instructions included in this Chapter will be used throughout the Washington State Department of Transportation for the express purpose of regulating the use of a nuclear density gauge containing radioactive materials.

Each Region shall have a Regional Radiation Administration Officer (RAO) and a Regional Radiation Safety Officer (RSO) whose duties are described in Chapter 9-6.2 and 9-6.3. All Regional RAO and RSO personnel must have radiation safety training. Only personnel who have successfully completed the WSDOT "Nuclear Gauge Safety and Operations" course are authorized to use or transport the nuclear density gauge. To perform acceptance testing with the nuclear density gauge all personnel must become a qualified or interim tester in either TM-8, In-Place Density of Bituminous Mixtures Using the Nuclear Moisture Gauge, and or, T-310, In-Place Density and Moisture Content of Soils and Soil-Aggregate by Nuclear Method. The operator's responsibilities for safety and security of the gauges are described in Chapter 9-6.4.

All personnel using or responsible for the nuclear density gauge shall be:

1. Thoroughly familiar with the safe handling techniques for using radioactive materials.

2. Fully informed of the hazards to health that exists near radioactive materials.

3. Completely familiar and in compliance with the following rules and regulations:

   a. Rules and Regulations for Radiation Protection by the State Department of Health, Division of Radiation Protection, Title 246, WAC.

   b. Radiation Emergency Handbook by the State Department of Health.

Copies of the above publications will be kept by the Region Radiation Safety Officer and at the storage location of the gauge. A copy of the *Radiation Emergency Handbook* will also be supplied with each nuclear density gauge. Authorized Operator(s) will read this handbook before using the radioactive testing device for testing.

If an emergency as outlined in the *Radiation Emergency Handbook* occurs, the following people or agencies should be notified by the individual in charge of the nuclear density gauge:

1. Radiation Safety Officer.

2. Radiation Administration Officer

The RSO or the RAO will notify, the following people or agencies:

1. Radiation Control Program; Health Services Division; State Department of Health; Olympia, Washington 98504 (Phone 206/NUCLEAR).

2. Washington State Patrol, if a public hazard exists.

3. State Radiation Administration Officer or Radiation Safety Officer, at the Materials Laboratory.

The telephone numbers of these agencies or individuals will be posted at all storage sites and a copy of these numbers shall be kept with each nuclear density gauge.

It is paramount to the Department that it's employees work in a healthy and safe environment. To this end each employee that works around or with nuclear gauges needs to know the potential hazards of working with nuclear gauges and their individual rights. Each office that uses or stores nuclear gauges shall have a copy of the latest "Sealed Source Edition Rules & Regulations for Radiation Protection" published by the Department of Health. Every employee that uses or works near the storage location of the nuclear gauges must sign the "Acknowledgment of the Hazards of Working with Radiation Sources" form after being instructed to review the applicable Chapters 246-220 Radiation - General Provisions; 246-221 Radiation Protection Standards; 246-222 Radiation Protection - Worker Rights. This form is available through the Radiation Safety Officer.

Personal monitoring of radiation received from the nuclear density gauge is one of the major items in the Health Safety Program. Any individual using radioactive sources or receiving on the job training with radioactive sources must wear a radiation exposure badge, which records any exposure that the body may receive. Radiation exposure badges are assigned to individuals. They are not to be used by any other person. Attention is to be made to the conditions outlined in WAC 246-221-010 and WAC 246-221-055 regarding the radiation exposure during pregnancy and dose limits to the embryo/fetus.

The acquisition of radiation exposure badges as needed by each Region shall be the responsibility of the Regional Radiation Safety Officer or a designated individual with radiation safety training. These badges can be obtained from U.S. Dosimeter Technology Inc., 660-A George Washington Way, Richland, Washington 99352, Telephone (509) 946-8738, or from a firm recognized by the Department of Health to perform this service. Three-month TLD (Thermal Luminescent Dosimeter) badges indicating exposure to gamma, beta, x-ray, and neutron radiation will be used as a minimum.

Each nuclear density gauge will be supplied in the manufacture's shipping container with an adequate latch. While transporting and when storing the nuclear density gauge, it must be secured with a minimum of 3 levels of security using locks:

1. Security level one is considered to be a combination of a lock on the handle of the nuclear density gauge, and a lock on the manufacture's shipping container.

2. Security level two is considered to be the chain and lock combination, or other locking mechanism, used to secure the manufacture's shipping container to the vehicle or toolbox.

3. Security level three is considered to be:

   a. If a passenger vehicle is used for transporting, the manufacturer's shipping container containing the nuclear density gauge, which is secured and locked in the trunk.

   b. If a station wagon, van, or panel truck is used, the manufacturer's shipping container containing the nuclear density gauge, which is secured and locked in the back of the vehicle in such a manner as to prevent it from moving during transport. Note, if the manufacture's shipping container can be seen through a window or other opening it must be covered.

   c. If a six-passenger pickup with a utility box is used, the manufacturer's shipping container containing the nuclear density gauge, which is secured in the utility box with the storage lid locked. The nuclear density gauge shall not be transported in the cab of the truck.

   d. If a pickup is used, the manufacturer's shipping container containing the nuclear density gauge, which is secured to the inside of a suitable utility box. The utility box must be secured to the bed of the pickup and locked to prevent theft.

At all times, the key(s) for the security locks will be in the possession of the individual responsible for the nuclear density gauge.

Every effort shall be made to store and transport nuclear density gauges in an effort to minimize its view from the general public.

When the nuclear density gauges are not in use or in transit, they must be stored with three levels of security in licensed storage locations, or temporary storage facilities approved by the Regional RSO.

9-6.2 Radiation Administration Officer (Region Materials Engineer)

The Radiation Administration Officer (RAO) will be responsible for administering the use of radioactive material within the Region.

The RAO will obtain, revise, and renew the Region's Radioactive Material License issued by the Washington State Department of Health. A license indicates the strength and type of sources that a Region may possess.

Licenses are issued subject to all the requirements of the Washington Rules and Regulations for Radiation Protection and to the conditions specified in the license. Licenses are also subject to any additional requirements of the Department of Health as stated in letters issued by DOH. Where a letter containing a license condition requirement differs from the Regulations, the letter will supersede the regulations insofar as the license is concerned.

When a change occurs in the radiation program, which would make untrue a statement in the current Radioactive Material License, the Licensee (RSO) will notify the Department of Health and request an appropriate amendment.

The Radiation Safety Officer must be listed on the license. Individual operators are not required to be on the license, but the Radiation Administration Officer or RSO must maintain a list of authorized operators. This list of authorized operators should include the operator's name, type of training, final test score, and a copy of the training certificate. The RAO or RSO will be responsible for the storage of the nuclear density gauge when not in field use, and the assignment of nuclear density gauge to the individual project offices. The RAO or RSO will be responsible for maintaining the following records:

1. List of qualified operators within the Region.
2. Radioactive testing device location records.
3. Radioactive testing device shipping records.

Prior to shipping or transferring the nuclear density gauge from one licensed organization to another, the shipper shall check, and be assured, that the receiver has a valid license; and that the shipped or transferred sources do not exceed the limitations of the receiver's license. Shipment to authorized personnel within the Region is covered by the Region's license. The State Materials Laboratory shall be notified of any repairs or calibration that is needed to the nuclear density gauge. When the nuclear density gauges are not in field use, the normal storage will be at the Region office. This should be an area designated for this purpose with the following information posted on the walls of the room to notify personnel of the existence of radiation:

1. "CAUTION — RADIOACTIVE MATERIALS" sign.
2. DOH Form RHF-3 "Notice to Employees."
3. WAC Chapters 246-220, 246-221, and 246-222 of the Rules and Regulations for Radiation Protection.
4. DOH Form "Notification of a Radiation Emergency."

9-6.3 Radiation Safety Officer

The Radiation Safety Officer (RSO) will have the responsibility for the Regional radiation protection program. The RSO will be responsible for maintaining the following records:

1. Leak test records.
2. Medical records.
3. Radiation Exposure Report.
4. Minor testing device maintenance as outlined in the Radioactive Materials License.
5. The Acknowledgment of the Hazards of Working with Radiation Sources form.

Leak testing is required by law and is simply a swabbing of the sealed source to ascertain that no radioactive contamination has occurred from the nuclear source. The Regional RSO shall be responsible for having each source wiped every six months. The analysis of leak tests shall be done by a commercial firm licensed to do this work.

The service contract will be obtained by individual regions. Records of leak test results shall be kept in units of micro-curies and maintained for inspection. Any leak test revealing the presence of 1850 Bq (0.005 microcuries) or more of removable radioactive material shall be reported to the Department of Health, Division of Radiation Protection, P.O. Box 47827, Olympia, WA 98504-7827, within five days of the test. This report should include a description of the defective source or device, the results of the test, and the corrective action taken.

Leak test kits can be obtained from Troxler Electronic Laboratory, Inc. When returning the sample for testing, place the sample in a plastic envelope. Place the plastic envelope(s) in another envelope and write your regions name, address, and other pertinent details on the outside. This envelope must be marked "RADIOACTIVE MATERIALS — NO LABEL REQUIRED."

Place this envelope into another envelope addressed to the approved facility for processing. Prior to being mailed, the contents and packing must be checked with a survey instrument and the radiation at any point on the surface must not exceed a dose rate greater than 0.005 mSv (0.5 millirem) per hour in order to comply with U.S. Postal Regulations.

The RSO will be responsible for radiation exposure reports for their personnel in that Region. Exposure records shall be kept on Department of Health Form RFH-5 or in a manner, which includes all information, required on said form. Each entry shall be for a period of time not exceeding one calendar quarter.

9-6.4 Authorized Operators

The Authorized Operators will be directly responsible to the RAO for the use and storage of the nuclear density gauge in the field and to the RSO for all safety in regard to the nuclear density gauge.

The Authorized Operators shall be responsible for posting the following information at all field storage areas:

1. "CAUTION — RADIOACTIVE MATERIALS" Sign.
2. DOH Form RHF-3 "Notice to Employees."
3. WAC Chapters 246-220, 246-221, and 246-222 of the Rules and Regulations for Radiation Protection.
4. DOH Form "Notification of a Radiation Emergency."

The Authorized Operator must keep the RAO or RSO informed of the location of the nuclear density gauge at all times. (The State Radiation Control Unit inspectors will want the sources produced or the exact locations given during their periodic inspections.) If the exact location where the nuclear density gauge will be used is known in advance, it should be noted before leaving the Region office, and if unknown, shall be forwarded to the RAO or RSO as soon as it is known.

The operation of the shutter-operating device should be continuously checked and any malfunction reported to the RAO or RSO immediately. When not in use, the source index handle will be locked and the nuclear density gauge locked in an adequate storage facility. When operating the nuclear gauge (i.e., when the handle is in the "USE" position), unauthorized personnel are not to be within 15 feet (5 meters) of the gauge.

9-7 Vacant

9-8 WSDOT Testing Methods

9-8.1 Calibrated/Verified Equipment for Testing

The following listed equipment used in the Region Laboratory and in the Field Laboratory for acceptance testing is required to be verified and / or calibrated annually, and shall bear a tag indicating when the calibration or verification will expire. It is the responsibility of the testing personnel (i.e., Module Qualified Testers, Method Qualified Testers, or Interim Qualified Testers and Independent Assurance Inspectors) to check all equipment for serviceability and conformance to the requirements of the test procedure. No equipment with an expired calibration or verification shall be used for testing.

Aggregate Testing

Drying Ovens (AASHTO T-255, 265)

General Purpose Balances, Scales and Weights (AASHTO M-231)

Mechanical Sieve Shaker (AASHTO T-27)

Sand Equivalent Shaker (AASHTO T-176)

Sand Equivalent Weighted Foot Assembly (AASHTO T-176)

Sand Equivalent Irrigation Tube (AASHTO T-176)

Sieves (AASHTO M-92)

Thermometers

Timing Devices (AASHTO T-176)

Fine Aggregate Apparatus (AASHTO T-304)

Flat and Elongated Particle Shape Apparatus (ASTM D-4791)

Asphalt Testing

Drying Ovens (AASHTO T-255, 265, and WAQTC TM-6)

General Purpose Balances, Scales and Weights (AASHTO M-231)

Ignition Furnace (AASHTO T-308)

Mechanical Sieve Shaker (AASHTO T-30)

Sieves (AASHTO M-92)

Thermometer - ASTM 17C or 17F (AASHTO T-209)

Thermometer – drying temperature

Timing Devices

Vacuum System (AASHTO T-209)

Water Bath - if used (AASHTO T-209)

Pycnometer (AASHTO T-209)

Gyratory Compactor (AASHTO T-312)

Weighting Bath (AASHTO T-166)

Concrete Testing

Concrete Air Meters - Pressure gauge (AASHTO T-152)

Concrete Air Meters - Volumetric gauge (AASHTO- T152)

Cube Molds and Tamper (AASHTO T106 and WSDOT T-813) (no tag on tamper required)

General Purpose Balances, Scales and Weights (AASHTO M-231)

Rebound Hammer Type N (ASTM C-805)

Single Use Molds (AASHTO M-205) (no tag required)

Slump Cone and Rod (AASHTO T-119) (no tag on rod required)

Thermometer (AASHTO T-309)

Compression Testing Devise and associated equipment (AASHTO T-22, WSDOT T-802)

Beam Molds (WSDOT T-808)

Embankment and Base Density Testing

Drying Ovens (AASHTO T-255, 265)

General Purpose Balances, Scales and Weights (AASHTO M-231)

Manual Hammer (AASHTO T-99)

Mechanical Sieve Shaker (AASHTO T-27)

Maximum Density Devise (WSDOT T-606)

Nuclear Density Gauge (AASHTO T-310)

Sieves (AASHTO M-92)

Speedy Moisture Meter (AASHTO T-217)

Soil Mold (AASHTO T-99 and WSDOT T-606)

Straight Edge (AASHTO T-99)

Asphalt Pavement Density Testing

Nuclear Density Gauge (WAQTC TM-8)

Thermometer

9-8.2 Field Test Methods for Materials

The test method as specified by WSDOT Materials Manual will be used to perform the testing. All testing will be performed by Module Qualified Testers, Individual Method Qualified Testers, or Interim Qualified Testers as defined in Chapter 9-5 of this manual. The tester can be qualified in a testing module, or by individual test methods. Section 9-8.2A is the list of the tests that are included in each of the modules. A tester can be Individual Method Qualified in any test that are included in the modules or from the list of individual tests in Section 9-8.2B, however the tester is not limited to just these tests. All of the test methods listed in each of the testing modules can be found in the blue pages following this section, see Section 9-8.2C for the Contents. In addition the WSDOT and WAQTC test methods that are performed in the field and that are listed in Section 9-8.2B are included.

9-8.2A Testing Modules

Testing Modules Procedures

Aggregate Module

Procedure Number	Test Method
AASHTO T-2	WSDOT FOP for AASHTO for the Sampling of Aggregates
AASHTO T-27/T11	WAQTC FOP for AASHTO for the Sieve Analysis of Fine & Coarse Aggregates & Materials Finer Than 75 mm (No. 200) in Mineral Aggregates by Washing
AASHTO T-176	WSDOT FOP for AASHTO for Determining the Plastic Fines in Graded Aggregate by Use of the Sand Equivalent Test
AASHTO T-248	WSDOT FOP for AASHTO for Reducing Field Samples of Aggregates to Testing Size
AASHTO T-255	WSDOT FOP for AASHTO for Determining the Total Moisture Content of Aggregate by Drying
WAQTC TM-1	Determining the Percentage of Fracture in Coarse Aggregate

Asphalt Module

AASHTO T-168	WAQTC FOP for AASHTO for the Sampling Bituminous Paving Mixtures
AASHTO T-209	WSDOT FOP for AASHTO for Determining the Theoretical Maximum Specific Gravity and Density of Bituminous Paving Mixtures
AASHTO T-27/T11	WAQTC FOP for AASHTO for the Sieve Analysis of Fine & Coarse Aggregates & Materials Finer Than 75 mm (No. 200) in Mineral Aggregates by Washing
AASHTO T-40	WAQTC FOP for AASHTO for Sampling Bituminous Materials
AASHTO T-308	WSDOT FOP for AASHTO for Determining Asphalt Content of Hot Mix Asphalt (HMA) by the Ignition Method
WAQTC TM-6	Moisture Content of Bituminous Mixes by Oven
WSDOT 712	Standard Method of Reducing Bituminous Paving Mixtures
WSDOT 716	Method of Random Sampling for Location of Testing and Sampling Sites

Concrete Module

AASHTO T-23	WSDOT FOP for AASHTO for Making and Curing Concrete test Specimens in the Field
AASHTO T-119	WSDOT FOP for AASHTO for Determining the Slump of Hydraulic Cement Concrete
AASHTO T-152	WAQTC FOP for AASHTO for Determining the Air Content of Freshly Mixed Concrete by the Pressure Method
WAQTC TM-2	Sampling Freshly Mixed Concrete
AASHTO T-309	WSDOT FOP for AASHTO for Determining the Temperature of Freshly Mixed Portland Cement Concrete

Embankment and Base Density Module

AASHTO T-224	WSDOT FOP for AASHTO for Correction for Coarse Particles in the Soil Compaction Test
AASHTO T-310	WSDOT FOP for AASHTO for In-Place Density and Moisture Content of Soil and Soil Aggregate by Nuclear Method

Asphalt Pavement Density Module

WAQTC TM-8	In Place Density of Bituminous Mixtures Using the Nuclear Moisture Gauge
WSDOT 716	Method of Random Sampling for Location of Testing and Sampling Sites

9-8.2B Individual Tests Method

Procedure Number		Owner	TestMethod
T	11	AASHTO	Materials Finer Than 0.075 mm (No. 200) Sieve in Mineral Aggregates by Washing
T	19	AASHTO	Unit Weight and Voids in Aggregates
T	21	AASHTO	Organic Impurities in Fine Aggregates for Concrete
T	22	AASHTO	Compressive Strength of Cylindrical Concrete Specimens
T	23	AASHTO	Making and Curing Concrete Test Specimens in the Field
T	27	AASHTO	Sieve Analysis of Fine and Coarse Aggregates
T	65	AASHTO	Mass (Weight) of Coating on Iron and Steel Articles with Zinc or Zinc-Alloy Coatings
T	88	AASHTO	Particle Size Analysis of Soils
T	99	AASHTO	FOP for AASHTO for Method of Test for Moisture-Density Relations of Soils
T	106	AASHTO	Compressive Strength of Mortars (Using 0-mm or 2-in.) Cube Specimens
T	121	AASHTO	Mass per Cubic Meter (Cubic Foot), Yield, and Air Content (Gravimetric) of Concrete
T	123	WSDOT	Method of Test for Bark Mulch
T	148	AASHTO	Measuring Length of Drilled Concrete Cores
T	166	AASHTO	Bulk Specific Gravity of Compacted Asphalt Mixtures Using Saturated Surface-DrySpecimens
T	196	AASHTO	Air Content of Freshly Mixed Concrete by the Volumetric Method
T	217	AASHTO	WSDOT FOP for AASHTO for Determination of Moisture in Soils by Means of a Calcium Carbide Gas Pressure Moisture Tester
T	231	AASHTO	Capping Cylindrical Concrete Specimens
T	244	AASHTO	Mechanical Testing of Steel Products
T	272	AASHTO	FOP for AASHTO for Family of Curves-One Point Method
T	304	AASHTO	FOP for AASHTO for Standard Method of Test for Uncompacted Void Content of Fine Aggregate
T	312	AASHTO	FOP for AASHTO for Preparing and Determining the Density of Hot-Mix Asphalt (HMA) Specimens by Means of the Superpave Gyratory Compactor
T	417	WSDOT	Method of Test for Determining Minimum Resistively and pH of Soil and Water
T	606	WSDOT	Method of Test for Compaction Control of Granular Materials
T	720	WSDOT	Method of Test for Thickness Measurement of Asphalt Concrete Cores
T	724	WSDOT	Method for Preparation of Aggregate for ACP Job Mix Design
T	726	WSDOT	Method of Test for Mixing Procedure for Binder and Aggregate
T	802	WSDOT	Flexural Strength of Concrete [Using Simple Beam with Center-Point Loading Breaking)
C	805	ASTM	Test Method for Rebound Number of Hardened Concrete
T	810	WSDOT	Method of Test for Determination of the Density of Portland Cement Concrete Pavement Cores
T	914	WSDOT	Practice for Sampling of Geotextiles for Testing
C	939	ASTM	Standard Test Method for Flow of Grout for Preplaced-Aggregate Concrete (Flow Cone Method)
D	1186	ASTM	FOP for ASTM for Nondestructive Measurement of Thickness of Nonmagnetic Coating on a Ferrous Base
D	4791	ASTM	FOP for ASTm for Test Method for Flat Particles, Elongated Particles, or Flat and Elongated Particles in Coarse Aggregate

9-8.2C Contents for Test Procedures in This Manual

Procedure Number	Owner	Test Method
TM 1	WAQTC	Determining the Percentage of Fracture in Coarse Aggregate
T 2	AASHTO	FOP for AASHTO for Sampling of Aggregate
TM 2	WAQTC	Sampling Freshly Mixed Concrete
TM 6	WAQTC	Moisture Content of Bituminous Mixes by Oven
TM 8	WAQTC	FOP for WAQTC for In-Place Density of Bituminous Mixes Using the nuclear Moisture-Density Gauge
T 23	WSDOT	FOP for AASHTO for Making and Curing Concrete test Specimens in the Field
T 27/11	WAQTC	FOP for AASHTO for Sieve Analysis of Fine and Coarse Aggregates and Materials Finer Than 75 mm (No. 200) in Mineral Aggregates by Washing
T 40	WAQTC	FOP for AASHTO for Sampling Bituminous Materials
T 99	WSDOT	FOP for AASHTO for Moisture-Density Relations of Soils Using a 5.5-lb (2.5-kg) Rammer and a 12-in. (305-mm) Drop
T 119	WSDOT	FOP for AASHTO for Standard Test Method for Slump of Hydraulic-Cement Concrete
T 123	WSDOT	Method of Test for Bark Mulch
T 152	WAQTC	FOP for AASHTO for Air Content of Freshly Mixed Concrete by the Pressure Method
T 166	WSDOT	FOP for AASHTO for Bulk Specific Gravities of Compacted Asphalt Mixtures Using Saturated Surface Dry Specimens
T 168	WAQTC	FOP for AASHTO for Sampling Bituminous Paving Mixtures
T 176	WSDOT	FOP for AASHTO for Plastic Fines in Grade Aggregate by Use of the Sand Equivalent Test
T 209	WSDOT	FOP for AASHTO for Method of Test for Maximum Specific Gravity of Bituminous Paving Mixtures — "Rice Density"
T 217	WSDOT	FOP for AASHTO for Determination of Moisture in Soils by means of a Calcium Carbide Gas Pressure Moisture Tester
T 224	WSDOT	FOP for AASHTO for Correction for Coarse Particles in Soil Compaction Test
T 248	WSDOT	FOP for AASHTO for Reducing Samples of Aggregate to Testing Size
T 255	WSDOT	FOP for AASHTO for Total Moisture Content of Aggregate by Drying
T 272	WSDOT	FOP for AASHTO for Family of Curves — One Point Method
T 304	AASHTO	FOP for AASHTO for Uncompacted Void Content of Fine Aggregate
T 308	WSDOT	FOP for AASHTO for Determining the Asphalt Binder Content of Hot Mix Asphalt (HMA) by the Ignition Method
T 309	WSDOT	FOP for AASHTO for Method for Determination of the Temperature of Freshly Mixed Concrete
T 310	WSDOT	FOP for AASHTO for In-Place Density and Moisture Content of Soil and Soil-Aggregate by Nuclear Methods (Shallow Depth)
T 312	AASHTO	FOP for AASHTO for Preparing and Determining the Density of Hot-Mix Asphalt (HMA) Specimens by Means of the Superpave Gyratory Compactor
T 420	WSDOT	FOP for AASHTO for Determining the Maturity of Compost (Solvita Test)
SOP 615	WSDOT	Determination of the % Compaction for Embankment & Untreated Surfacing Materials using the Nuclear Moisture-Density Gauge
T 712	WSDOT	Standard Method of Reducing Bituminous Paving Mixtures

T	716	WSDOT	Method of Random Sampling for Location of Testing and Sampling Sites
T	724	WSDOT	Method for Preparation of Aggregate for ACP Job Mix Design
T	726	WSDOT	Method of Test for Mixing Procedure for Binder and Aggregate
SOP	728	WSDOT	Standard Operating Procedure for Determining the Ignition Furnace Calibration Factor (IFCF) for Hot Mix Asphalt (HMA)
SOP	729	WSDOT	InPlace Density of Bituminous Mixes Using the Nuclear Moisture-Density Gauge FOP for WAQTC TM 8
SOP	730	WSDOT	Standard Operating Procedure for Correlation of Nuclear Gauge Determined Density with Asphalt Concrete Pavement Cores
SOP	731	WSDOT	Method for Determining Volumetric Properties of Asphalt Concrete Pavement Class Superpave
T	805	WSDOT	Rebound Hammer Determination of Compressive Strength of Hardened Concrete
T	807	WSDOT	Method of Operation of California Profilograph and Evaluation of Profiles
T	813	WSDOT	Field Method of Fabrication of 50-mm (2-in.) Cube Specimens for Compressive Strength Testing of Grouts and Mortars
T	914	WSDOT	Practice for Sampling of Geotextiles for Testing
T	939	WSDOT	FOP for ASTM for Flow of Grout for Preplaced-Aggregate Concrete (Flow Cone Method)
D	1186	WSDOT	Nondestructive Measurement of Dry Film Thickness of Nonmagnetic Coatings Applied to a Ferrous Base
D	4791	ASTM	FOP for ASTM for Test Method for Flat Particles, Elongated Particles, or Flat and Elongated Particles in Coarse Aggregate

contract plans for; shop drawings, schematic circuit drawings etc. for Illumination, Traffic Signal Systems, and Electrical for shop drawings, including approved revisions for prestressed structural elements and all other structural steel components fabricated from shop plans. Specific requirements for these plans are outlined in Sections 6-02.3(26)A, 6-03.3(7), 8-03.3(10) and 8-20.3(17) of the Standard Specifications.

Upon project completion, all "As-Built" plans are to be arranged in numerical sequence, including a cover sheet with pertinent project data in the lower right corner, and submitted to the Headquarters Engineering Records office, where they will become a part of the project *Permanent Final Records*. The As-Built Plans will be processed for microfilming by Engineering Records and will be returned to the Region along with a set of the microfilm aperture cards when they are completed.

10-3.12 Final Record Field Notebooks

Field notebooks are bound books of notes that are used for specific kinds of work such as alignment notes, grading notes, pile driving notes, etc. Field notebooks can also consist of loose leaf field notes that have been bound together into books as well. Records that appear in the field books should not be duplicated and placed in other final record books. The only exception to this rule are copies of Field Note Records with multiple item numbers which may be copied as described in Chapter 10-4.3, Structure Notes.

Field notebooks should be consecutively numbered and each should have the pages numbered beginning with number one. Typing information in the field book is not necessary as hand lettering is preferred. As with other project records, erasure corrections of any kind are not permitted.

The quantities for payment for each item of work in the field notebook shall correspond directly to entries in the CAPS project ledger. Adequate cross-referencing must be made between the field notebook and the project ledger in order to trace item quantities and entries from one to the other.

The field notes should show the initials of the persons or person making them, the date, and the weather conditions if appropriate. In some cases, different stages of work will be noted on the same page, such as staking, measurement, and construction. This would require dates and initials at each stage of work. The notes shall also show the dates that quantities are computed and checked along with the initials of those persons doing the work. In all cases, field notes should be neat and legible and show all necessary information. Figures 10-4 and 10-5 show sample field notes and summary for clearing.

Sketches should be shown when necessary to compute a quantity that cannot be computed from the As-Built Plans. Sometimes structure excavation sketches are helpful for determining the pay limits and computing the volume; other sketches are helpful on special details.

Current business practices provide for electronic calculation and storage of all types of detailed surveying data, quantity calculations, etc. Data forms for template input, calculation setup, forms for direct recording of field information, storage media for electronic files, as well as output for the calculated data shall all be treated as an original source documents. See Chapter 10-3.13 for further direction in regards to electronic data.

Remeasure cross section notes, where a deviation from the established roadway section or slopes has occurred, should be indexed carefully so that they can be identified readily with the original cross section. For convenience of calculation on remeasure, plotted cross sections may also be used.

Structure and drainage notes in the Final Record Field Notebook should show the stationing, distance left or right, angle or skew if applicable, flow line elevation and grade in the case of culverts, drains and ditches, and all information necessary for computation of the pay items involved in the construction. For convenience, it is recommended that all pay quantities pertaining to the construction of items listed on the Structure Notes sheets of the plans, be shown in the field book with structure note number, item number, and quantities, and that cross-references be used to show where the totals were obtained. It should be remembered that quantities must be segregated by group number as shown in the summary of quantities contained in the contract plans.

For use as an example, Figures 10-6 and 10-7 show the front and back of a completed field note for the installation of a reinforced concrete sewer pipe.

10-3.13 Electronically Produced Documents

There are many computer applications available for use on a WSDOT highway construction project. Included are programs for earthwork quantities, mass diagrams, basic cut and fill, geometrics, surveying, and for determining structural quantities. In addition, there are many other "stand alone" applications created by individuals in each office for use on personal computers that are also recognized for these kinds of uses.

When electronic computations are used, the output generated must be bound together and identified with a title sheet for final record purposes. These documents are to be made a part of the three-year *Temporary Final Records* retained by the Region as explained in Chapter 10-3.1. When a computer program is used to calculate quantities for payment, the summary sheets containing the quantities entered in the project ledger must be treated as source documents with all required signatures, dates, ledger entry number, and sufficient cross referencing to provide a good audit trail.

10-3.14 Photographs

A detailed photographic record is an important part of the project documents. A photographic record could consist of filmed photographs, digital photos, infrared photographs,

video, etc. A photographic record should be taken of unusual equipment, construction methods, problem areas, areas of possible controversy, traffic control, and especially conditions in the area of an accident. In addition to these are ”before” and “after” views taken from the same vantage point. These are particularly useful in documenting the progress of work. When photographs are to be maintained as a part of the project documents they must be fully identified. Photographs should clearly note when they were taken (date and time), where they were taken, and who took the picture. Although photographs are placed in the category of three-year *Temporary Final Records*, some Regions have extended the Region retention period for photographs or have even included them as a part of the project’s *Permanent Final Records* for permanent retention.

10-3.15 Pre-Estimate Reports

A Pre-Estimate report prepares the CAPS system to make an estimate payment. This report provides the opportunity for the project office to preview the estimate and is a means to allow for any corrections or deferments to be made before actual payment. The corrected Pre-Estimate Report used to make a progress payment must be signed by the Project Engineer in order to indicate authorization for payment. The signed Pre-Estimate Report must be retained in the project files, and become a part of the three-year *Temporary Final Records*. For additional information regarding progress payments and the CAPS system, see Chapter 1 3.1B of this manual.

10-3.16 Estimate Reports

When a payment is made to the Contractor for a progress or Final Estimate, the project office receives a copy of all the reports that are sent to the Contractor along with the warrant. The Contract Estimat Payment Advice report and the Contract Estimate Payment Totals report should be compared to the Pre-Estimate report verifying that the amount actually paid is the same as the amount authorized. These estimate reports should be kept with the completed Pre-Estimate reports in the project files, and become a part of the three-year *Temporary Final Records*. For additional information regarding progress payments and the CAPS system, see Chapter 1-3.1B of this manual

10-4 Project Ledger System

10-4.1 General

The Contract Administration and Payment System (CAPS) provides both an accounting and payment system, while also acting as an information collection system. The CAPS program uses an electronic project ledger that is maintained current throughout the life of the project as the backbone of the system. All items of work on a project for which payment is made must be entered into the electronic project ledger. Items posted in the ledger become the basis for payment and summary record document for dollars paid to the Contractor, quantity of work performed by the Contractor, status reports during the active life of the contract, and are also used as the basis for final reports when the project is completed.

As work is completed on the project, the project office continuously enters those quantities into the ledger, those records then become eligible for payment when the next progress estimate is due. Processing of monthly progress and project final estimates is further detailed in Chapter 1-3 of this manual. With the ledger entries completed, the application compiles all those records eligible for payment and transfers the data to the payment portion of the CAPS system. Because of the system’s ability to store information it is also used as an extensive resource for corporate information regarding the construction program and is used extensively by many other groups throughout WSDOT.

All electronic data incorporated into the CAPS system is stored on either an active file or a history file. These files are both permanently retained and are available for use whenever the need arises. It is not necessary, or intended, that paper copies of the project ledger be retained for final records.

Detailed instructions for the use of the CAPS system can be found in the CAPS Manual.

A key function of CAPS is to provide a complete audit trail for every pay item. An audit trail must be clearly maintained from the original source document through the actual payment to the Contractor. Audits are an effective tool used by both state and federal governments to ensure established procedures and processes are correctly used to maintain the most effective use of the public’s funds. It is important that WSDOT maintain sufficient records and documentation to clearly identify an audit trail that is capable of withstanding the test of audits.

In order to satisfy the requirements of an accounting audit, the following conditions must be met:

- There must be a source document for every ledger entry and vice-versa.
- There must be an orderly filing system to facilitate timely retrieval of source documents.
- Both Interim Progress Estimate and Final Estimate reports must be signed by the Project Engineer.
- The Contract Estimate Payment Advice report must be filed along with its corresponding Progress Estimate report.

10-4.2 Source Documents

Each ledger entry must be supported by a detailed source document, which specifically identifies the type, amount, and location of the work or material that is being entered into

A

Acceptance of concrete, 6-8
Acceptance samples and tests, 9-1
Acid soil/alkaline soil, 8-6
Admixtures, 9-29
Aeration, 2-6
Aerial photographs, 2-12
Affidavit of wages paid, 1-67
Aggregates for asphalt concrete and asphalt treated base, 9-13
Air entraining admixtures and water reducing admixtures, 9-29
Anchor, 9-31
Anchor bolts, 6-28, 9-19, 9-31
Anchor bolts for luminaire, signal poles, and sign, 9-31
Approval of materials, 9-6
As-built plans, 8-21
Asphalt concrete and asphalt treated base, 9-14
Asphalt concrete pavement, 5-6
Asphalt treated base, 4-4
Assurance samples testing, 9-43
Authority of the Project Engineer, 1-59

B

Backfill, 7-3, 9-14
Backflow, 8-17
Ballast and crushed surfacing, 4-1
Balled and burlapped, 8-6
Bank run gravel, 9-14
Bare root, 8-6
Barrier, 6-16
Basis for acceptance, 9-37
Beam guardrail, guardrail anchors, and glare screen, 9-27
Bearing values, 6-2, 6-35
Bedding, 7-3
Bituminous materials, 9-12
Bituminous surface treatment, 5-1
Bolts, 9-19
Borrow pits, 2-9
Bridge approach slab anchors, 9-21
Bridge deck construction, 6-10
Bridge rail, 9-33
Bridge railings, 6-39
Bud, 8-6
Bulk specific gravity, 6-41

C

Calendar cutoff dates, 5-7
Caliper, 8-6
Cane, 8-6
Cast-in-place concrete piling, 6-34
Castings, 9-18
Catch basins, 7-5, 9-23
Cement concrete pavement, 5-20
Chain link fence, 8-19
Change order - checklist, 1-33
Change order executed by ferries, 1-34
Change order executed by regions, 1-33
Change order executed by the State Construction Office, 1-33
Changes in the work, 1-25
Channel excavation, 2-15
Claims, 1-68
Cleaning metal, 6-39
Clearing, 2-1, 8-19
Clearing and grubbing - combined, 2-1
Clearing the site, 6-2
Coast Guard, 1-13
Cofferdams, 2-14
Compaction, 2-6, 4-2, 5-16
Compaction control, 5-18
Compression seals, 9-15
Concrete, 9-34
Concrete aggregates, 9-13
Concrete culvert, sewer, drain, and underdrain pipe, 9-16
Concrete curing compounds, 9-28
Concrete pipe acceptance report, 9-9
Concrete seals and cofferdams, 6-14
Concrete structures, 6-6, 6-15
Conduit, 8-22, 8-23, 9-30
Construction and maintenance of detours, 1-20
Construction Engineer, Administration, 1-1
Construction Engineer, Bridges, 1-32
Construction Engineer, Roadway, 1-32
Construction geotextiles, 9-34
Construction joints, 5-26
Construction signs, 1-22
Construction staking, 1-71
Contraction joints, 5-25
Contractor furnished material sources, 3-3
Contractor furnished sources, 3-5
Contractor-WSDOT relationships, 1-7
Control of materials, 9-10, 9-35
Control of Work, 1-58

Controlled blasting, 2-3
Credit, 3-3
Cross-connection control, 8-17
Crushed, 3-1
Crushing, 3-1
Culverts, 7-1, 7-2, 7-4, 9-16
Curing, 5-25
Curing concrete, 6-13

D

Daily compaction reports, 2-8
Defective materials, 1-59
Defective or Unauthorized Materials or Work, 1-58
Density, 5-16
Density tests, 4-2
Detours, 1-20
Direct tension indicator method, 6-30, 6-31
Disputes and claims, 1-67
Ditch, 2-15
Dowels and tiebars for concrete pavement, 9-21
Drain pipe, 9-16, 9-17
Drains, 7-1
Duct, 6-23
Duties before construction begins, 5-5
Duties before paving begins, 5-10
Duties during paving operations, 5-12

E

Earth embankments, 2-9
Earthwork quantities, 2-12
Elastomeric bearing pads, 9-32
Electrical conductors, 9-31
Embankment construction, 2-6
Embankment foundations, 2-5
Environmental considerations, 1-16
Epoxy coated reinforcing steel bars for concrete, 9-20
Epoxy resins, 6-11
Equipment for testing, 9-52
Erection of steel, 6-28
Erosion control, 2-10
Erosion of slopes, 2-5
Evaluation of independent assurance samples testing, 9-43
Excavation, 2-3
Expansion dams, 6-4, 6-32
Expansion joints, 9-35

F

Fabric bearings pad, 9-33
Falsework, 6-6
Fencing, 9-26
Fertilizer, 8-7, 8-13, 9-25
Field notes, 10-1
Final cleanup, 6-4
Finishing, 6-12
Flaggers, 1-22
Flow line, 7-2
Fly ash, 6-6
Form letters, 9-1
Foundations, 6-2
Frequency of testing, 9-36

G

Gabion baskets, 9-30
Galvanized steel, aluminized steel and aluminum corrugated metal culvert, drain pipe and perforated underdrain pipe, 9-17
Genus, 8-6
Geotextiles, 9-34
Girders, 6-20
Gravel backfill for foundations, 7-3
Gravel backfill for pipe zone bedding, 7-3
Gravel backfill for walls, 2-15
Gravel base, 4-1, 9-14
Gravel borrow, 2-7, 9-15
Grubbing, 2-1
Guardrail, 8-18, 9-27
Guardrail posts and blocks, 9-27
Guidelines for job site control of materials, 9-35

H

Handling and storing material, 6-28
Haul, 2-12
High strength bolts, nuts and washers, 9-19
High-strength bolts, 6-30
Hollow steel piling and jack vasing, 9-23
Hot plant inspection, 5-8

I

Illumination, 8-20
Independent assurance program, 9-38
Inlets, 9-23
Inspection and sampling of materials, 5-4
Inspection during mixing operations, 5-9

Inspection during planting, 8-11
Inspection of bituminous surface treatment, Class A, 5-2
Inspection of bituminous surface treatment, Class B, C, & D, 5-3
Inspection of concrete production facilities, 6-6
Inspection of mixing plant, 5-9
Inspection of planting, 8-8
Inspection of trucks, 6-7
Inspection tools, 5-11
Inspector's duties, 3-2
Inspector's record of field tests, 3-1
Inventory inspection, 6-6
Irrigation, 8-14
Irrigation system, 8-15, 9-26

J

Joint filler, 9-15
Joints, 5-25
Junction boxes, 8-22

K

Keystone, 4-3

L

Landscape, 8-6
Layout, 6-28
Lighting standards, 8-22
Luminaires and lamps, 9-32

M

Manholes, 7-5, 9-23
Manufacturer's certificate of compliance, 9-9
Material acceptance, 1-62
Materials Engineer, 1-2
Maximum density, 2-7, 9-41
Mechanical splices, 9-20
Metal culvert, 9-17
Metric Designed Projects Administered with English Standard Specifications, 1-43
Mineral filler, 9-14
Miscellaneous deduction, 1-63
Miscellaneous duties of the street inspector, 5-19
Miscellaneous inspection duties, 5-4
Mix design, 5-20, 6-6
Mixing, 5-22
Moisture content, 2-7
Mudsills, 6-3
Mulch, 8-8, 9-25

N

Node, 8-8
Nuclear density gauges, 9-53

O

Opening to traffic, 5-26
Optimum moisture, 2-8
Order, 1-47
Order list, 6-34
Overbreak, 2-4
Overburden, 3-2
Overrun of plan quantity, 1-27

P

Painting, 6-34, 6-39
Paints for structures, 9-22
Paving equipment, 5-11
Payment for shoring or extra excavation, 1-62
Payment for surplus processed material, 1-62
Payroll, 1-52
Pedestrian safety, 1-16
Perforated underdrain pipe, 9-17
Performance reports, 1-61
Pesticide, 8-8
Photogrammetry, 2-12
Pier, column, and wall concrete, 6-14
Pile driving records, 6-38
Piling, 6-34, 9-23
Pipe, 9-16, 9-17
Pipe arch, 7-4
Pipe zone bedding, 9-15
Pit, 3-1
Pit evaluation report, 3-3
Pit operations, 3-2
Pit run aggregates, 9-15
Placement, 6-8
Placing concrete roadway slab, 6-32
Plant establishment, 8-14
Plant inspector, 5-10
Plant inspector's checklist, 5-8
Plant material, 8-13, 9-24
Planting, 8-5
Plastic waterstop, 9-29
Point of acceptance, 6-9
Portland Cement, 9-11
Post-tensioned bridges, 6-22
Post-tensioning record, 6-24
Post-tensioning reinforcement, 9-21
Poured joint sealant, 9-16
Precast concrete barrier, 9-33

Precast concrete catch basins, manholes, and inlet, 9-23
Precast concrete piling, 6-34
Preleveling, 5-12
Preliminary samples and tests, 9-1
Preparation of untreated roadway, 5-12
Prestressed concrete, 9-27
Prestressed concrete products, 6-20, 9-27
Production, 3-1
Progress schedule, 8-14
Project documentation reviews, 10-14
Proportioning and mixing concrete, 6-6
Pruning, 8-13
Public convenience and safety, 1-18

Q

Quarry, 3-1

R

Radiation Administration Officer, 9-55
Radiation Safety Officer, 9-55
Radioactive testing devices, 9-54
Railings, 6-39
Railroad agreements, 1-14
Railroad flagging, 1-63
Raised pavement markers, Types 1, 2, and 3, 9-28
Record of materials, 9-6
Records of construction signing, accidents, and surveillance, 1-23
Reinforcing bars for concrete, 9-20
Reinforcing steel, 6-17
Removal of structures and obstructions, 2-2
Reports and records, 5-5
Request for approval of material, 9-6
Request to sublet, 1-42
Required contract provisions for federal-aid construction contracts, 1-52
Required tests, 5-7
Resins, 9-29, 9-30
Responsibility of the street inspector, 5-10
Roadside cleanup, 2-1, 2-2
Roadway excavation and embankment, 2-2
Rock embankments, 2-9
Rollers, 5-16
Rust, 6-39

S

Safety bars, 9-33
Safety nets and staging, 6-4
Safety tags, 8-23
Sales tax, 1-40
Sampling and testing for small quantities of materials, 9-36
Sampling and testing schedule, 9-39
Sand equivalent test, 3-1
Sanitary sewers, 9-18
Scalping, 3-2
Scour, 6-2
Screen analysis for gradation, 3-1
Seal coat, 5-3
Seals, 6-14
Seed, 9-25
Segregation, 3-2, 6-8
Setting anchor bolts and masonry plates, 6-28
Settlement indicating devices, 2-6
Sewers, 7-4
Shear keys, 6-8
Shop drawings, 8-20
Shop inspection of prestressed concrete products, 6-22
Shoring and cribbing, 7-5
Sidewalks, 8-19
Sign posts, 9-33
Sign structures, 9-31
Signal, luminaire, and strain poles, 9-31
Significant decimal places, 10-2
Signing, 8-23
Site reclamation, 3-5
Slides, 2-5
Slipform, 6-16
Slope protection, 9-24
Slope treatment, 2-13
Slump, 6-9, 9-34
Small quantities, 9-36
Solid rock, 2-3
Specific gravity, 3-3, 9-54, 9-55
Specific requirements for each material, 9-10
Speed limits, 1-23
Speedy moisture tester, 2-8
Splices, 6-18
Spreading and finishing, 5-14
Statement of Materials and Labor, 1-60
Steel for bridges, 9-19
Steel piling, 6-34
Steel structures, 6-27
Stockpiling, 3-4
Straightening bent material, 6-28
Street inspector's checklist, 5-10
Stress absorbing membranes, 5-5
Strippings, 3-1

Structural plate pipe, pipe arch, and underpass, 7-4
Structural plate pipes and arches, 9-17
Structural timber and lumber - untreated, 9-22
Structure excavation, 2-14
Structures, general requirements, 6-1
Subcontractors and lower tier subcontractors, 1-7
Subgrade preparation, 2-13
Supplemental final estimates, 1-66
Surface Mining Act, 3-5
Surface smoothness, 5-15
Surfacing aggregates, 9-13
Suspension of work and delay, 1-47

T

Tack coat, 5-12
Temporary water pollution/erosion control, 2-10
Tendon, 6-23
Test borings, 6-2
Test cylinders, 6-13
Test methods for materials, 9-53
Test numbering, 9-1
Test piles, 6-38
Test sections, 5-17
Testing equipment, 5-7, 5-27
Testing modules, 9-54
Tie/dowel bars, 5-24
Timber, 9-23
Timber structures, 6-33
Tolerance limits, 9-44
Traffic control, 1-19, 1-22, 5-11
Traffic control plans, 1-20
Traffic signal systems, 8-22
Treated timber piling, 6-34
Tremie, 6-14
Trimming and cleanup, 2-15
Turn-of-nut method, 6-30

U

Underground utilities, 1-12
Underrun of plan quantity, 1-26
Unfinished cement concrete pavement, 5-26
Unsuitable foundation, 2-6

V

Verification samples and tests, 9-1
Vibration, 6-7

W

Waste sites, 3-5
Water, 2-14
Water distribution system, 9-32
Water pipe, 9-26
Waterproofing, 6-40
Weather and temperature limits, 6-8
Weed control, 5-19
Weekly statement of working days, 1-47
Weep holes, 2-15
Weighing, 10-4
Welding of structural steel, 6-32
Welding reinforcing steel, 6-20
Wire fence, 8-19
Wire reinforcement for concrete, 9-21
Wiring, 8-22
Working in water, 6-4
WSDOT furnished material sources, 3-2
WSDOT furnished sources, 3-5