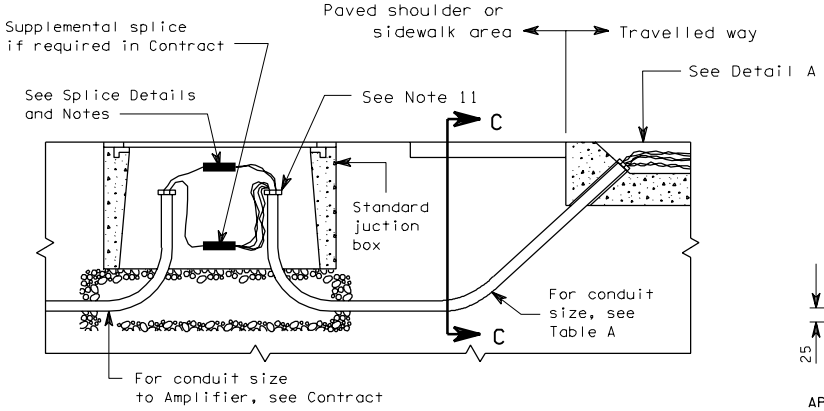

TYPICAL CONDUIT PLACEMENT FOR LOOP LEAD-IN WIRES

Loop lead pairs	1-2	3	4-5	6-8	9-12
Conduit size (MIN)	27	35	41	53	63

TABLE A

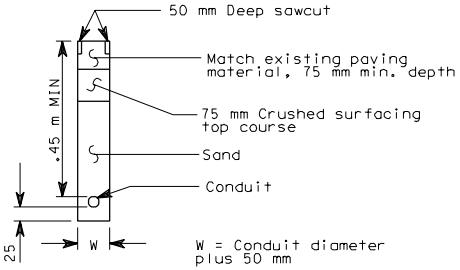

APPLICABLE FOR OFF-ROAD PAVED AREAS ONLY

SECTION C-C

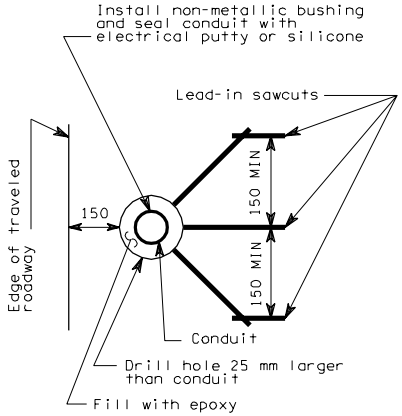

LEAD - IN SAWCUTS AND CONDUIT PLACEMENT DETAIL

DETAIL A

ALL DIMENSIONS ARE IN MILLIMETERS UNLESS OTHERWISE NOTED.

INDUCTION LOOP DETAILS

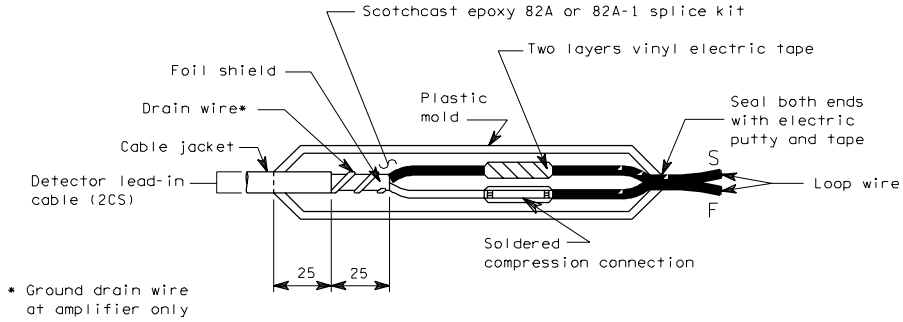

SPLICE DETAIL

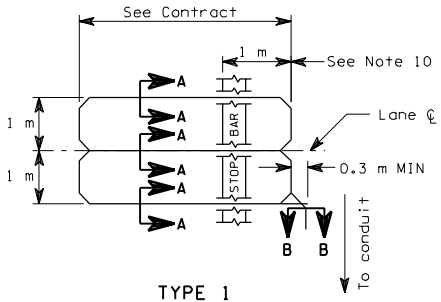

TYPE 1

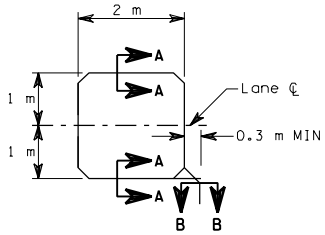

TYPE 2

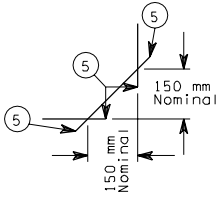

TYPICAL CORNER SAWCUT

LOOP SAWCUT DETAILS

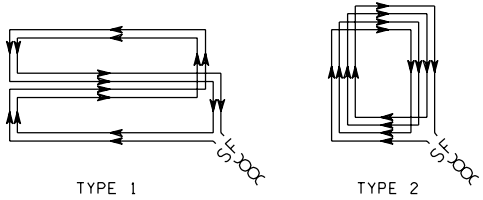

TYPE 1 TYPE 2

LOOP WINDING DETAILS

LOOP INSTALLATION NOTES

1. Install junction box and lead-in conduit.
2. Saw loop slots and lead-in slots.
3. Lay out loop wire begining at junction box, allowing two meters minimum slack.
4. Install wire in loop slot. See Loop Winding Detail.
5. Return to junction box and identify leads with plan detector number and "S" for start and "F" for finish.
6. Twist each pair of lead-in wires six turns per meter from loop to junction box and install in lead-in slot and conduit. Reverse direction of twist for each successive pair installed.
7. Construct supplemental splice containing any series or parallel loop connections required in plans. Supplemental splices are subject to the same requirements shown for the loop lead and shielded cable splice.
8. Splice loop leads or supplemental splice leads to shielded cable as noted.
9. Complete installation and test loop circuits or combination loop circuits.
10. Front of loop should be measured from back of stop bar, or back of crosswalk where no stop bar is installed.
11. Seal ends of conduit.

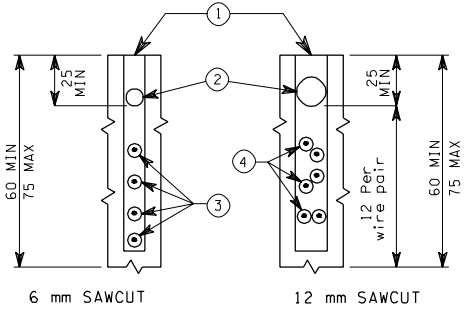

6 mm SAWCUT 12 mm SAWCUT

SECTION A-A SECTION B-B

1. Sealant
2. Twisted polypropylene rope (Sized for snug fit)
3. Loop wire - number varies (See Loop Winding Details)
4. Lead-in wires: One pair for each loop served, three pairs maximum per sawcut (See installation notes)
5. Extend sawcut sufficient length to provide full sawcut depth around corners

ALL DIMENSIONS ARE IN MILLIMETERS UNLESS OTHERWISE NOTED.

INDUCTION LOOP DETAILS