NOTE:

See contract for location and material requirements.

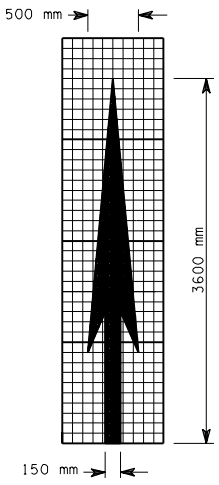

TYPE 1

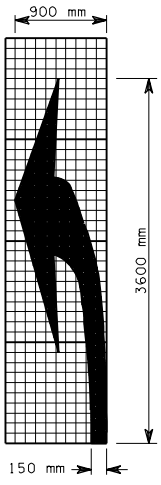

TYPE 2L (LEFT) SHOWN
TYPE 2R (RIGHT)

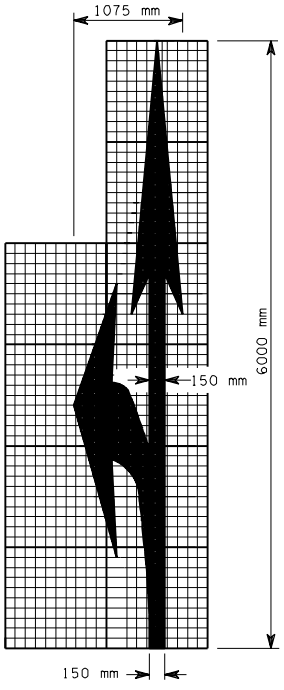

TYPE 3L (LEFT) SHOWN
TYPE 3R (RIGHT)

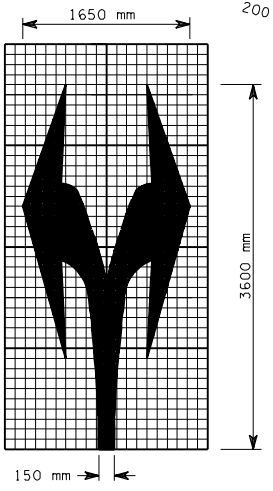

TYPE 4

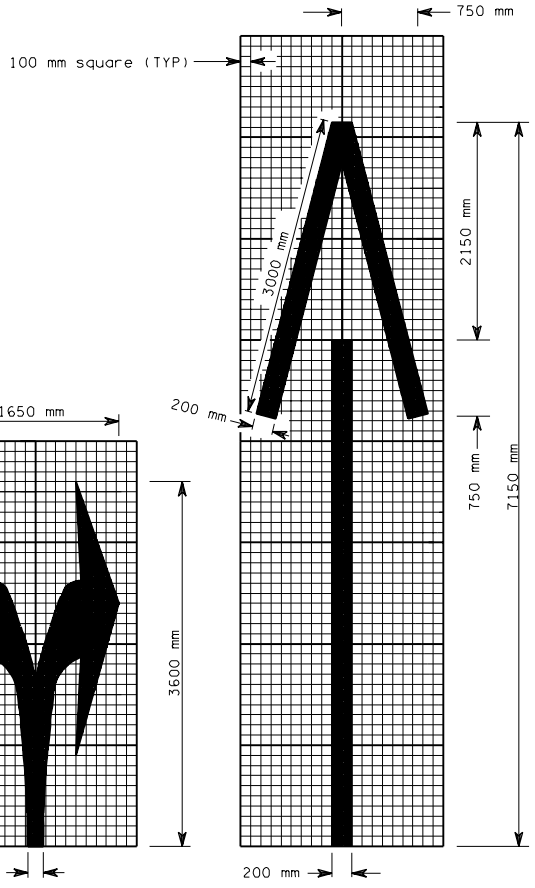

TYPE 5

ARROW SYMBOLS

ALL DIMENSIONS ARE IN MILLIMETERS
UNLESS OTHERWISE NOTED

PAVEMENT MARKINGS

NOTE:

See contract for location and material requirements.

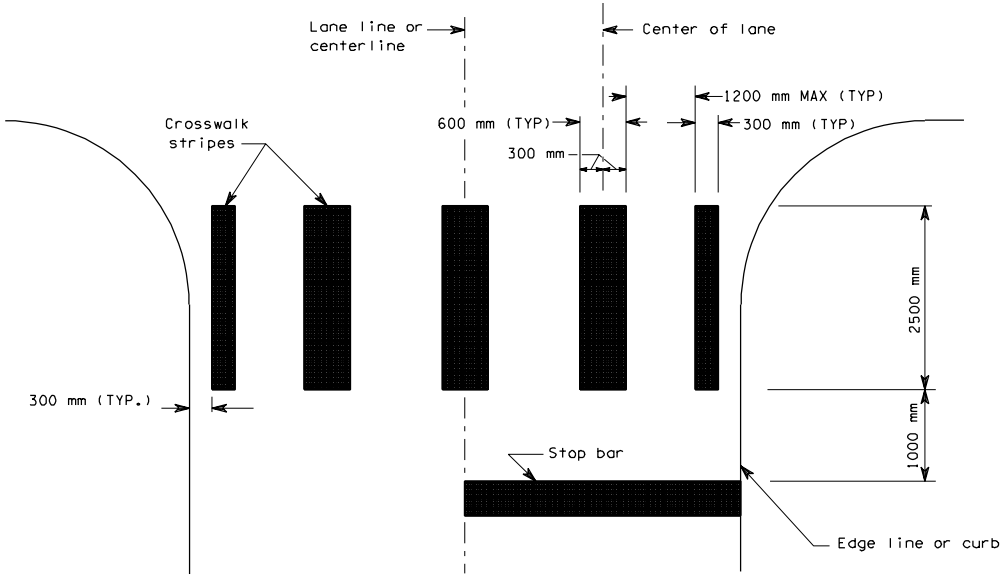

CROSSWALK STRIPE DETAILS

PREFERENTIAL LANE SYMBOL TABLE				
TYPE	A	B	C	USE
1	300	5000	1400	FREEWAYS & RAMPS
2	150	3600	900	ARTERIALS

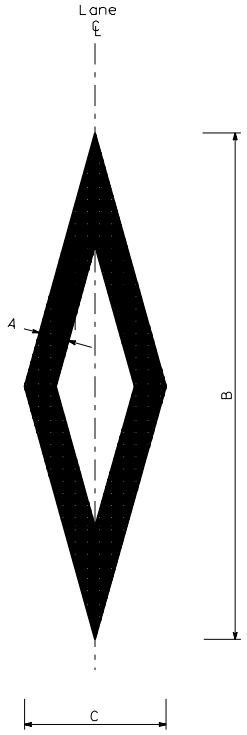

PREFERENTIAL LANE SYMBOL

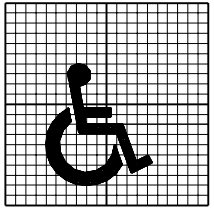

HANDICAPPED PARKING STALL SYMBOL

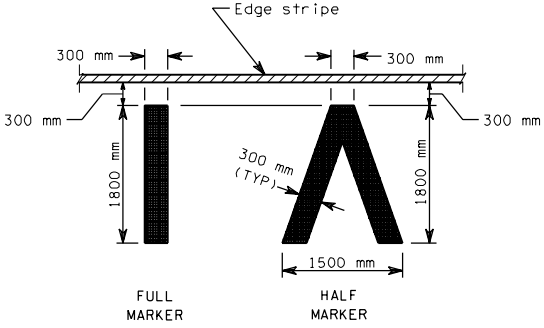

AERIAL SURVEILLANCE MARKINGS

ALL DIMENSIONS ARE IN MILLIMETERS UNLESS OTHERWISE NOTED

PAVEMENT MARKINGS

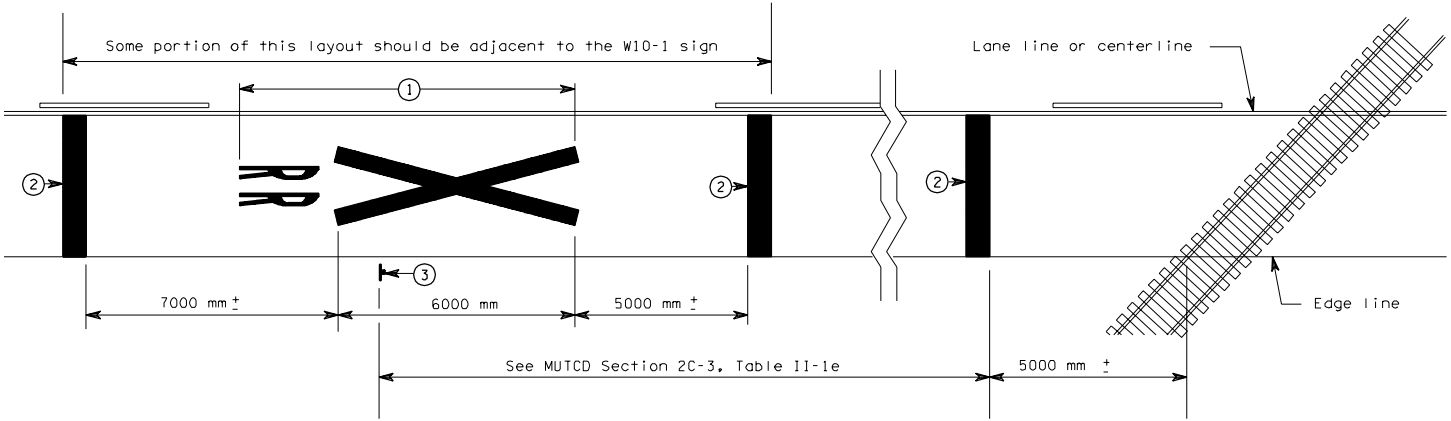

RAILROAD - HIGHWAY GRADE CROSSINGS
PAVEMENT MARKING PLACEMENT DETAIL

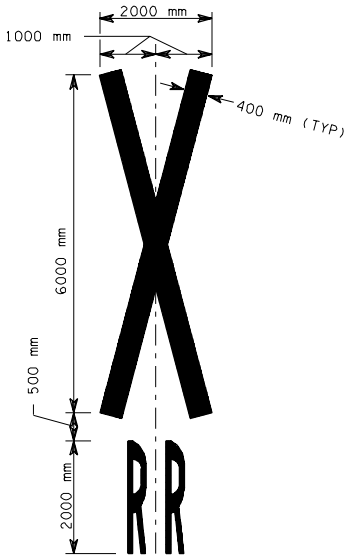

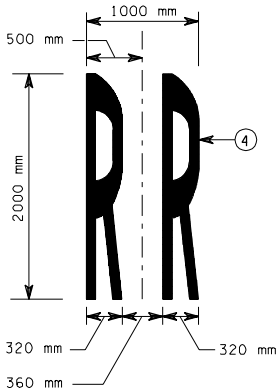

RR CROSSING SYMBOL DETAILS

KEY

1. RR CROSSING SYMBOL
2. 600 mm STOP BAR
3. W10-1 ADVANCE WARNING SIGN
4. SEE "STANDARD ALPHABETS FOR HIGHWAY SIGNS AND PAVEMENT MARKING, 1977 METRIC EDITION" FOR LETTER LAYOUT.

ALL DIMENSIONS ARE IN MILLIMETERS
UNLESS OTHERWISE NOTED

PAVEMENT MARKINGS