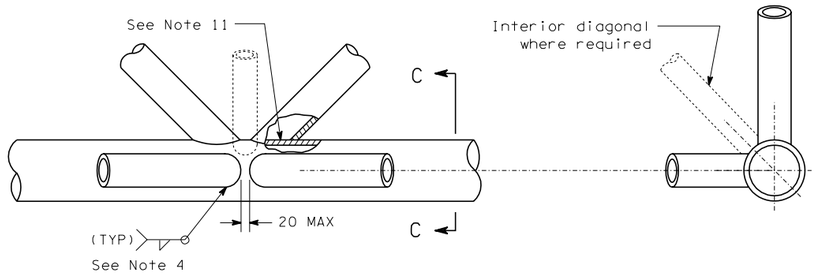

PLAN

SECTION C-C

TYPICAL JOINT DETAIL

Chord shown - End Post Similar

SPAN LENGTH (m)	F (mm)	T (mm)	K (mm)
18.3 or less	150	19	M12
18.4 to 27.4	180	22	M16
27.5 to 36.6	215	25	M20
36.7 to 45.7	240	32	M22

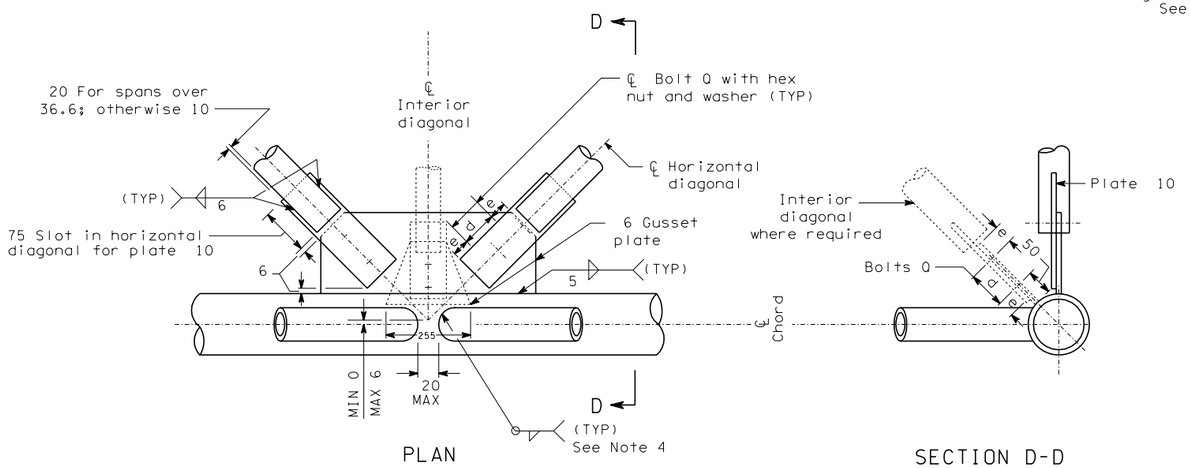

PLAN

SECTION D-D

ALTERNATE JOINT DETAIL

Not for connections between vertical diagonals and chords.

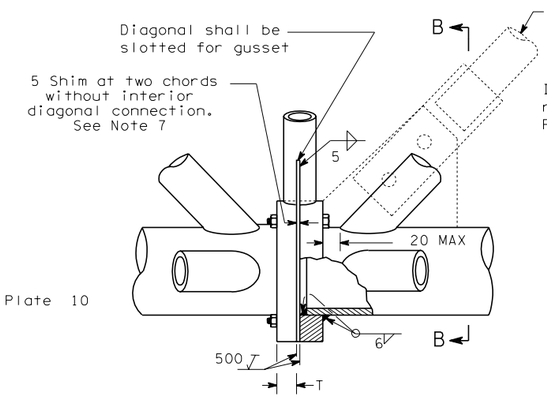

PLAN

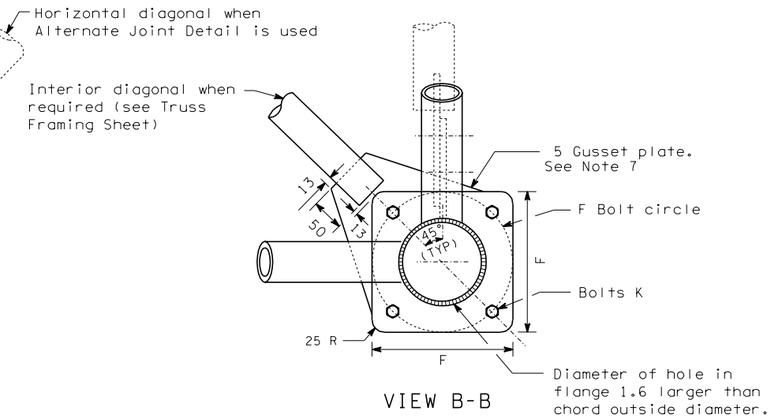

VIEW B-B

CHORD FIELD SPLICE

ALL DIMENSIONS ARE IN MILLIMETERS UNLESS OTHERWISE NOTED

SPAN LENGTH (m)	ALTERNATE JOINT DETAIL DATA		
	e (mm)	d (mm)	BOLT Q DIAMETER
18.3 or less	32	64	M20
18.4 to 27.4	38	76	M22
27.5 to 36.6	38	76	M22
36.7 to 45.7	44	89	M24

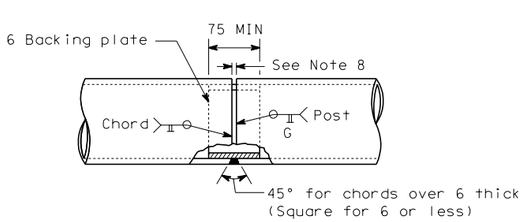

END POST OR CHORD SHOP SPLICE

See Note 9

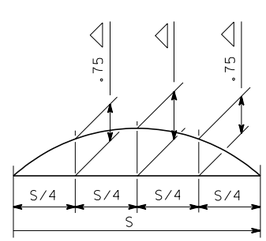

SPAN LENGTH S(m)	△ - (mm)
12.2	13
15.2	19
18.3	22
18.6	22
21.3	25
24.4	32
27.4	38
27.7	35
30.5	41
33.5	51
36.6	60
36.9	54
39.6	64
42.7	73
45.7	86

For span lengths not listed, interpolate values of △.

Fabricate truss with chords curved to provide camber. Do not camber by using shims between chord at splices.

DEAD LOAD CAMBER

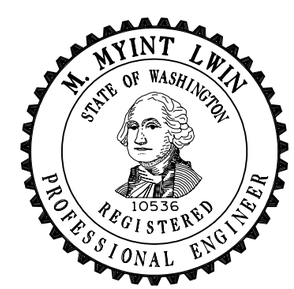

EXPIRES JANUARY 17, 1999

SIGN BRIDGE STANDARD PLAN G-2

SHEET 2 OF 3 SHEETS

NOTE: THIS PLAN IS NOT A LEGAL ENGINEERING DOCUMENT BUT AN ELECTRONIC DUPLICATE. THE ORIGINAL, SIGNED BY THE ENGINEER AND APPROVED FOR PUBLICATION, IS KEPT ON FILE AT THE WASHINGTON STATE DEPARTMENT OF TRANSPORTATION. A COPY MAY BE OBTAINED UPON REQUEST.

DATE	REVISION	BY
5/98	Redrawn on CADD, revised for steel materials only.	GEM

APPROVED FOR PUBLICATION

Clifford E. Mansfield — 7/2/98

for STATE DESIGN ENGINEER — DATE

WASHINGTON STATE DEPARTMENT OF TRANSPORTATION
OLYMPIA, WASHINGTON